29

10 / 2017

NUOVA RICAMBI

CATALOGO RICAMBI

SPARE PARTS CATALOGUE • CATALOGUE PIÈCES DE RECHANGE

ERSATZTEILKATALOG • CATÁLOGO DE RECAMBIOS

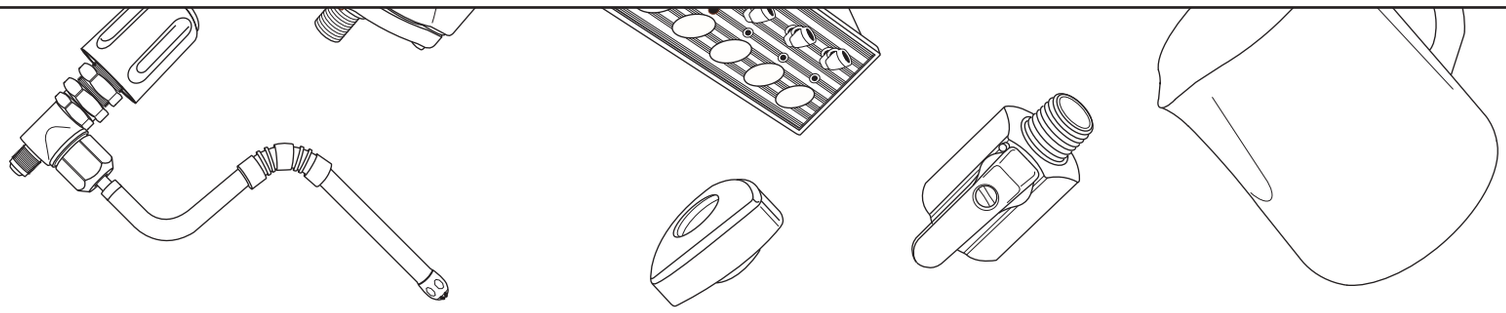

Avvertenze
I disegni presenti in questo catalogo, sono stati realizzati dalla Nuova Ricambi srl, qualsiasi eventuale somiglianza è riconducibile alla similarità degli articoli in commercio.
Ne è vietata la riproduzione, anche parziale, senza autorizzazione scritta dalla Nuova Ricambi srl.
Ogni violazione sarà perseguita secondo i termini di legge.

Remarques
Les dessins présentés dans ce catalogue, ont été réalisés par Nuova Ricambi srl. D'éventuelles réssemblances peuvent dériver de la similarité des produits commercialisés.
La reproduction, même partielle, sans écrite autorisation de la Société Nuova Ricambi srl est interdite.
Toute violation sera poursuivie selon la Législation en vigueur.

Remarks
The drawings in this catalogue are realized by Nuova Ricambi srl, any similarity to other products is purely casual.
The reproduction or even partial reproduction of the same, is strictly forbidden without the written authorisation of Nuova Ricambi srl.
Any violation of these conditions will be subject to legal action.

Hinweise
Die Zeichnungen, die in diesem Katalog enthalten sind, wurden von der Firma Nuova Ricambi srl realisiert. Ähnlichkeiten mit anderen Produkten sind auf die Gleichartigkeit der vermarkteten Artikel zurückzuführen.
Jede Reproduktion und Verbreitung, ganz oder teilweise, ist ohne die Genehmigung von Nuova Ricambi Srl nicht erlaubt.
Jede Zuwiederhandlung wird gesetzlich verfolgt.

MACCHINE CAFFE' • COFFEE MACHINES

Astoria /CMA ..... 3 - 12
Aurora- Brugnetti ..... 13 - 15
Bezzera ..... 16 - 22
BFC - ROYAL ..... 23 - 34
Brasilia ..... 35 - 48
Carimali ..... 49 - 54
Casadio ..... 55 - 61
Cimbali ..... 62 - 73
Conti ..... 74 - 80
Dalla Corte ..... 81 - 85
ECM ..... 86 - 92
Elektra ..... 93 - 97
Expobar ..... 98 - 104
Faema ..... 105 - 137
Fiamma RST ..... 138 - 145
Futurmat - Ariete ..... 146 - 151
Gaggia ..... 152 - 159
La Marzocco ..... 160 - 164
La San Marco ..... 165 - 172
La Spaziale ..... 173 - 180
Nuova Simonelli ..... 181 - 187
Pavoni ..... 188 - 199
Promac ..... 200 - 204
Rancilio ..... 205 - 216
Sanremo ..... 217 - 223
Vibiemme ..... 224 - 235
Victoria Arduino ..... 236 - 238
Wega ..... 239 - 246

LAVASTOVIGLIE • DISHWASHERS

Comenda - Faema ..... 247 - 254

FABBRICATORI DI GHIACCIO • ICE MAKERS

Brema 255
Frimont - Faema 256
Simag - Faema 257

VARI • VARIOUS

Depuratori e filtri acqua *Softeners and water filters* ..... 258 - 263
Elettropompe - Pompe *Motor pumps - Pumps* ..... 264 - 267
Tubi *Pipes* ..... 268 - 269
Raccordi *Fittings* ..... 270 - 273
Cappuccinatori *Milk Frothers* 274
Portafiltri *Filter holders* ..... 275 - 276
Prodotti chimici *Chemical products* ..... 277 - 280
Componenti macchine caffè *Coffee machine's components* ..... 281 - 295

MACINADOSATORI • COFFEE GRINDERS

Anfim ..... 296 - 303
Compak 304
Eureka ..... 305 - 313
Faema ..... 314 - 315
Fiorenzato ..... 316 - 317
H 5 318
HC 600 319
HC 700 320
Macap ..... 321 - 327
Mazzer ..... 328 - 335
Nuova Simonelli ..... 336 - 337
Obel ..... 338 - 342
Quamar ..... 343 - 344
Rossi ..... 345 - 346
Casa 347
Vari Macinini - *Various Grinders* ..... 348 - 349
Elenco Macine - *Grindstones List* ..... 350 - 354

ACCESSORI • ACCESSORIES

Pressini *Tampers* ..... 1 - 2
Filtri Competizione *Competition Filter* ..... 3 - 4
Docce Competizione *Competition Shower* ..... 5 - 6
Supporti Portafiltri *Filter Holder Support* 7
Lattiere - Accessori *Milk Jugs - Accessories* ..... 8 - 11
ACAIA 12
Cafelat ..... 13 - 16
Clockwork 17
Crema Pro ..... 18 - 19
EDO ..... 20 - 26
IWAKI 27
Pallo 28
Profondi 29
Pulman ..... 30 - 31
Tazze *Cups* ..... 32 - 34
Strumenti di Misura *Measuring Accessories* ..... 35 - 36
Accessori di Pulizia *Cleaning Accessories* 37
Portafiltro con Manometro *Filter Holder with Manometer* 38
Cassetti Battifondi *Knock Box Drawers* ..... 39 - 40
Portafiltri senza Fondo *Naked Filter Holders* ..... 41 - 42
Portafiltro Cialde e Portafiltro Teflonato *Filter Holder for Pods and Teflon Coated Filter Holder* 43
Portafiltri per capsule *Capsule Filter Holder* ..... 44 - 45
New Kit Professional Coffee Test 46
Coffee Bean Roasting System 47
Coffee Queen Original 48
Macinadosatori *Coffee Grinders* ..... 49 - 56
Libri Collezione Enrico Maltoni *Enrico Maltoni Collection's Books* 57

ASTORIA / CMA

CALYPSO - CORE600 - DIVINA - GLORIA - GRETA - SABRINA
SIBILLA - TANYA - RAPALLO - GRUPPO 58 mm

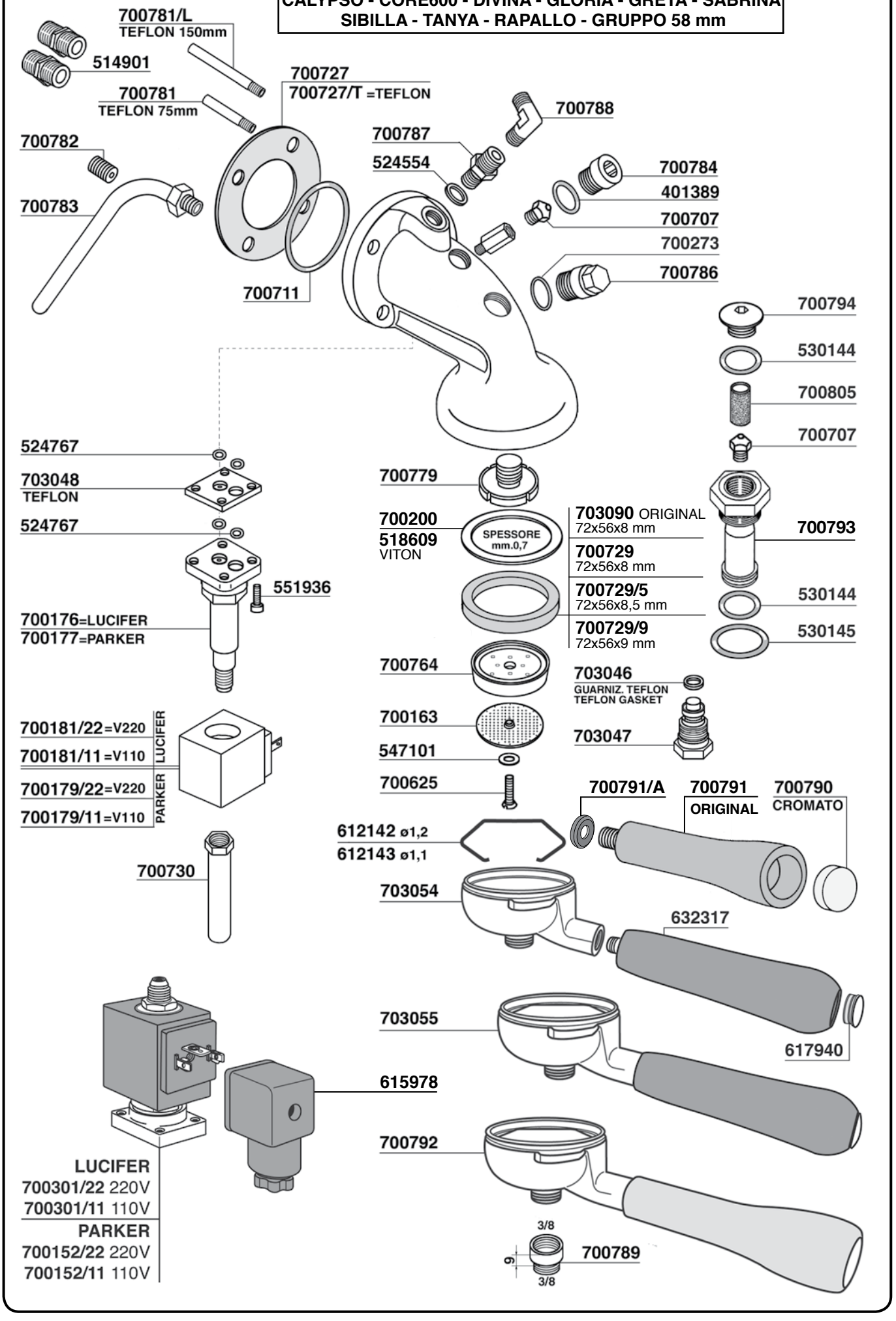

ASTORIA / CMA

GRUPPO 53 mm

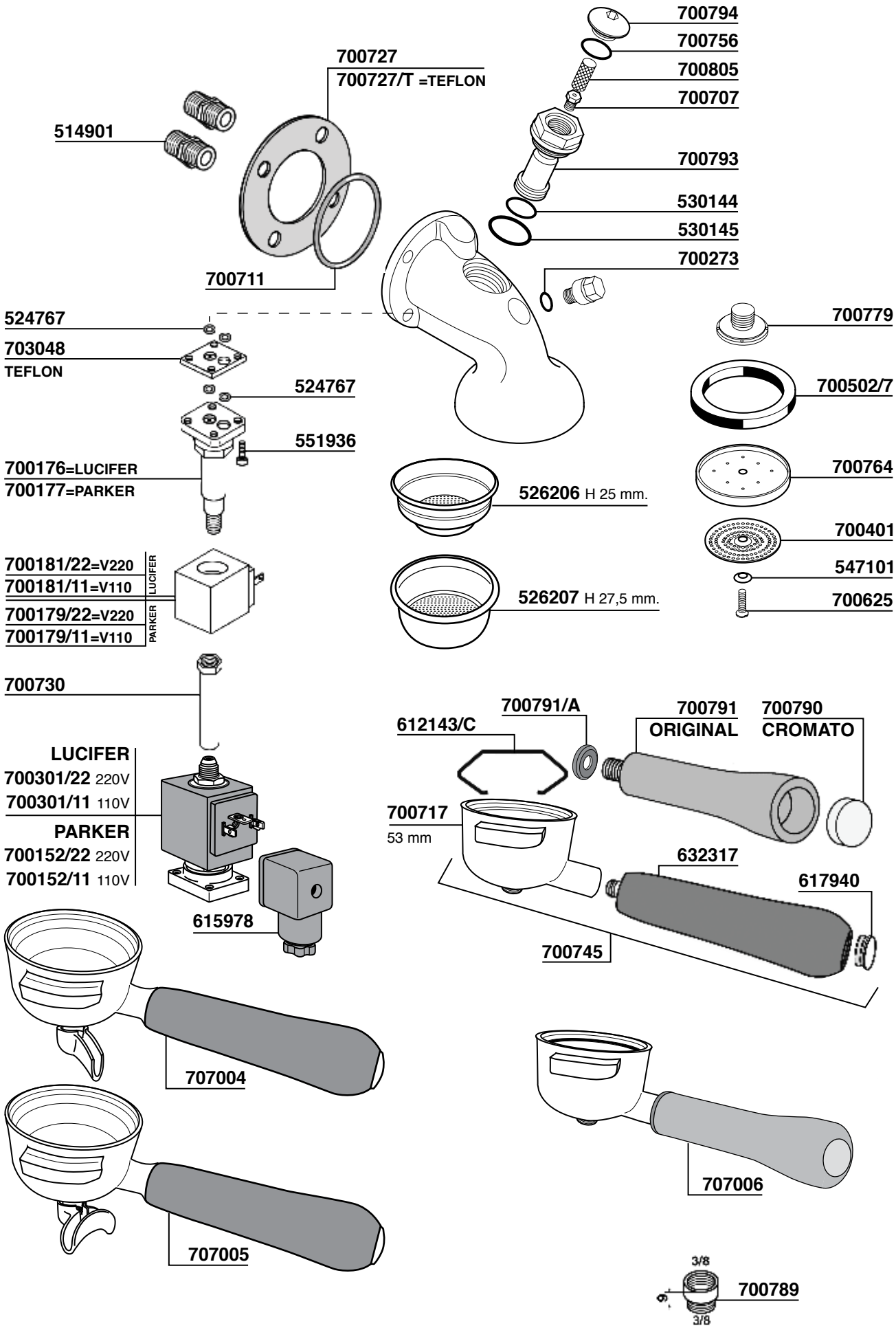

ASTORIA / CMA

ARGENTA - BRAVA - DORA - LISA - PRATIC

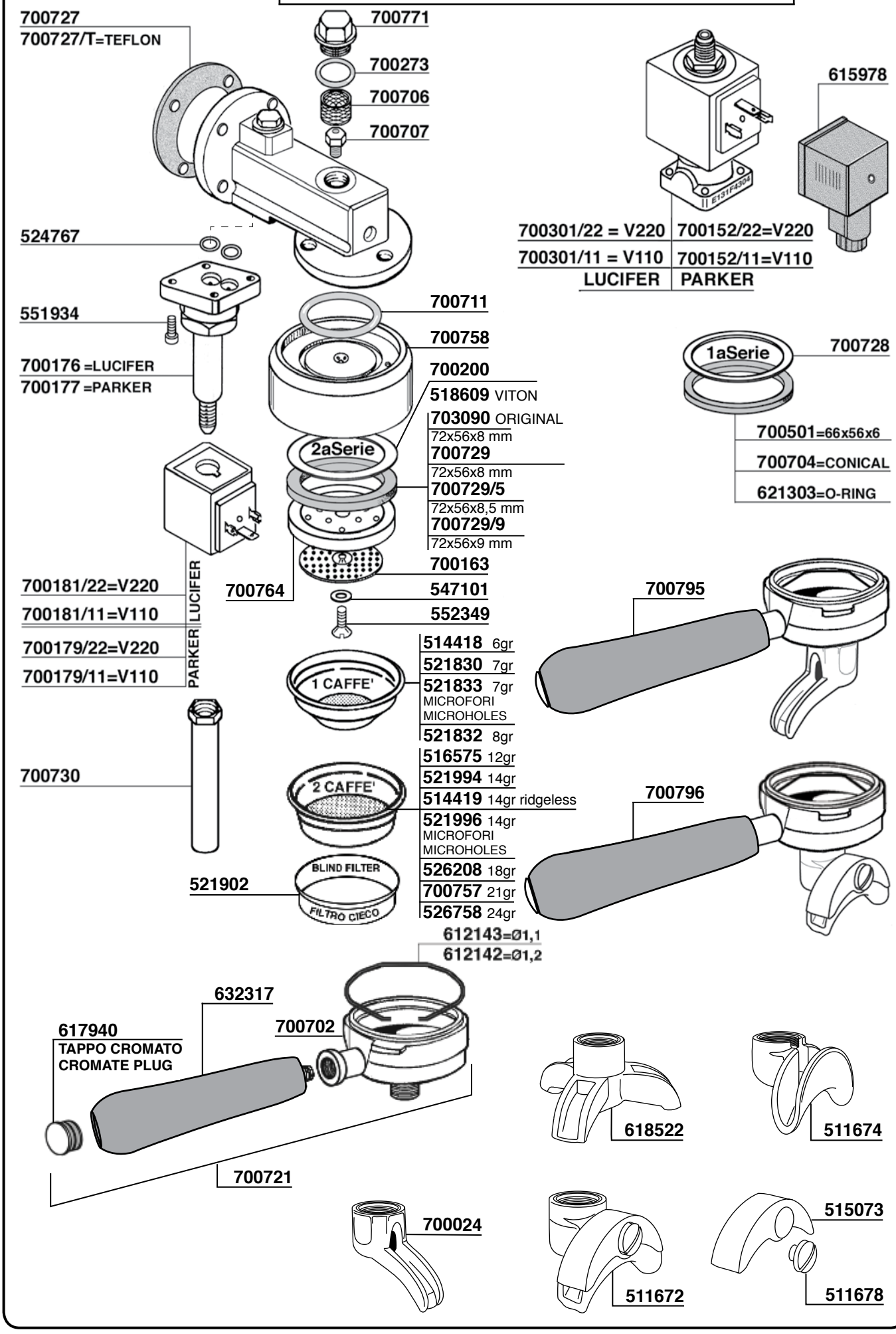

ASTORIA / CMA

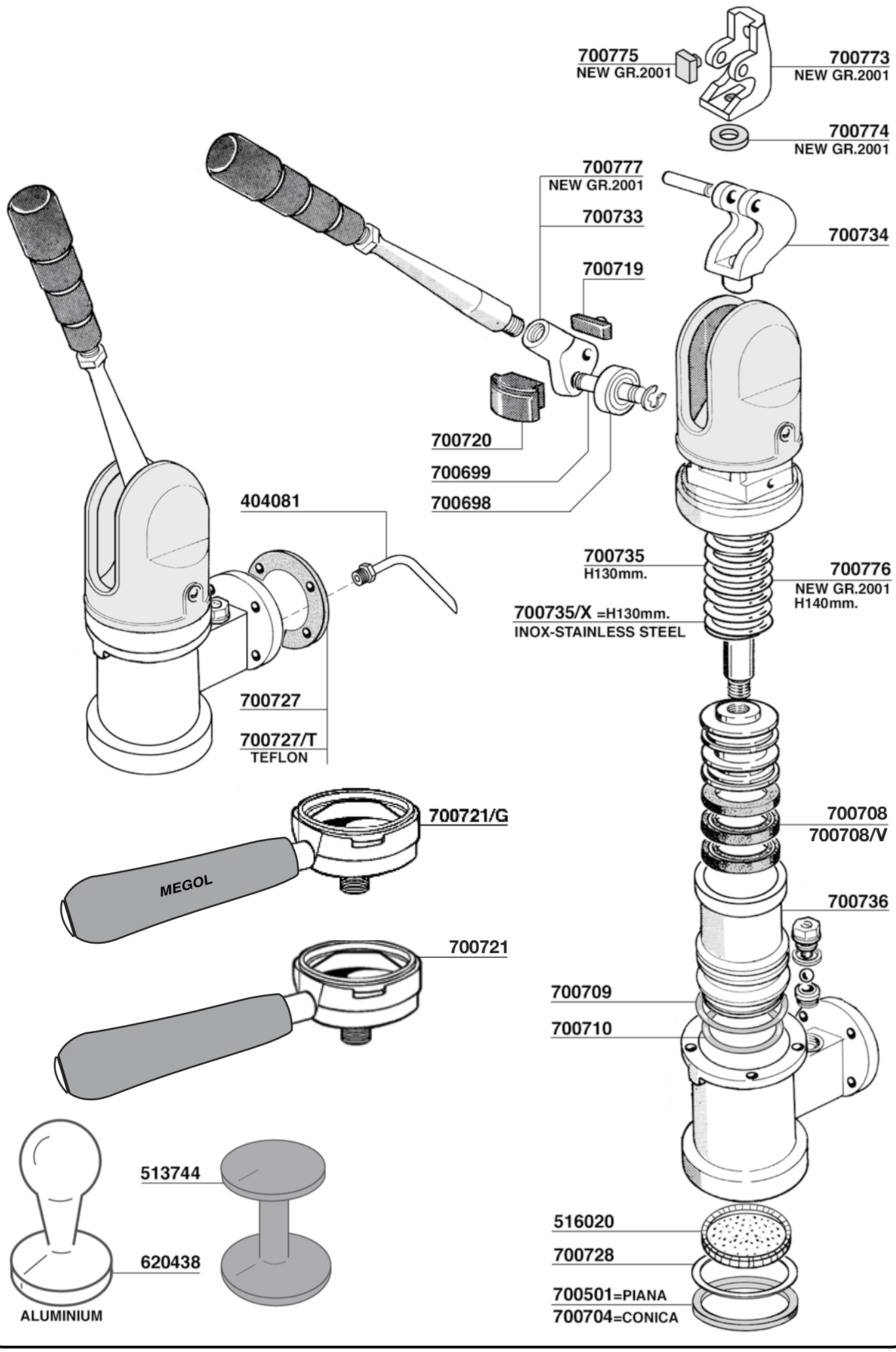
700775
NEW GR.2001
700773
NEW GR.2001
700774
NEW GR.2001
700777
NEW GR.2001
700733
700734
700719
700720
700699
700698
404081
700735
H130mm.
700776
NEW GR.2001
H140mm.
700735/X =H130mm.
INOX-STAINLESS STEEL
700727
700727/T
TEFLON
700721/G
MEGOL
700708
700708/V
700736
700721
700709
700710
513744
620438
ALUMINIUM
516020
700728
700501=PIANA
700704=CONICA

ASTORIA / CMA

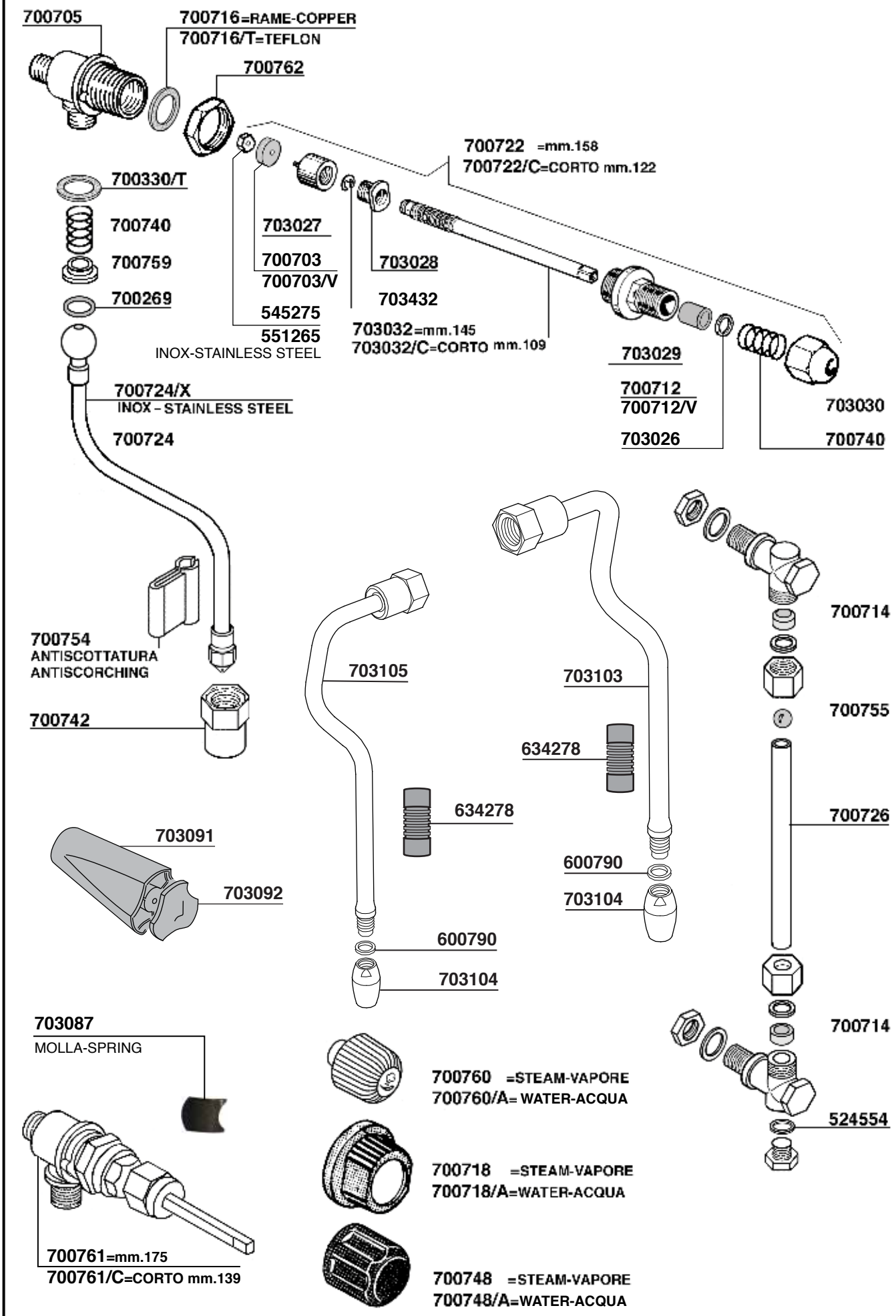
700705
700716=RAME-COPPER
700716/T=TEFLON
700762
700722 =mm.158
700722/C=CORTO mm.122
700330/T
700740
700759
700269
703027
700703
700703/V
703028
703432
545275
551265
INOX-STAINLESS STEEL
703032=mm.145
703032/C=CORTO mm.109
703029
700712
700712/V
703026
703030
700740
700724/X
INOX - STAINLESS STEEL
700724
700754
ANTISCOTTATURA
ANTISCORCHING
700742
703105
703103
634278
634278
700714
700755
700726
703091
703092
600790
703104
600790
703104
700714
524554
703087
MOLLA-SPRING
700761=mm.175
700761/C=CORTO mm.139
700760 =STEAM-VAPORE
700760/A= WATER-ACQUA
700718 =STEAM-VAPORE
700718/A=WATER-ACQUA
700748 =STEAM-VAPORE
700748/A=WATER-ACQUA

ASTORIA / CMA

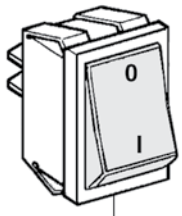

700429

703025
25A 0-1-2

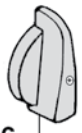

613656

700769
32A 0-1

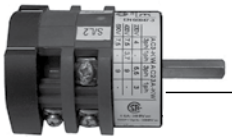

700749
20A 0-1

700648/11 =V110/60
700648/22 =V230/50/60
700648/24 =V240/50/60

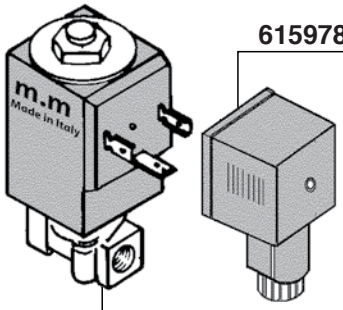

615978/P

700253/22 =V220
700253/11 =V110

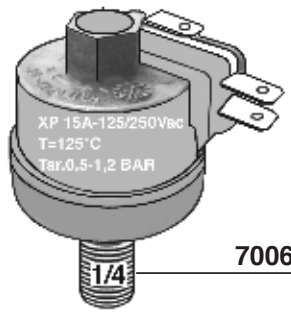

700662

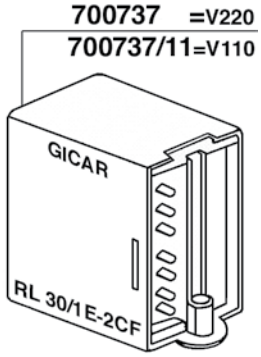

700737 =V220
700737/11=V110

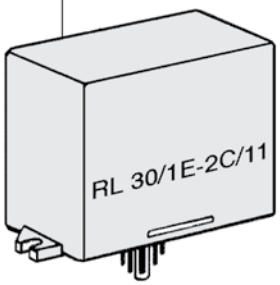

700574=V220
700574/11=V110

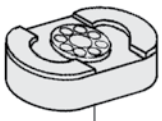

401920

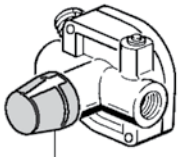

700464

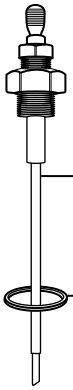

612601 120mm

524554

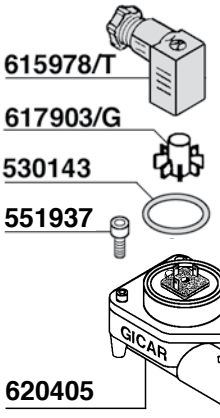

615978/T

617903/G

530143

551937

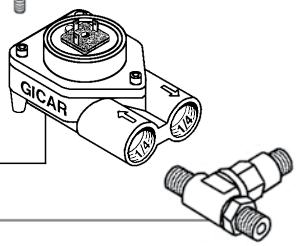

620405

703007

620405/C

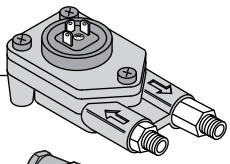

703082

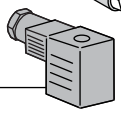

615978/T

615979

617903

530143

551937

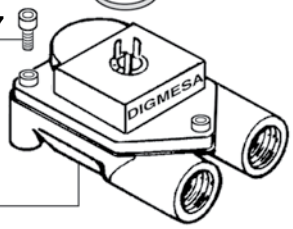

700621

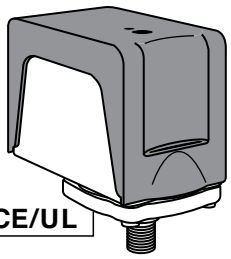

616597 CE/UL

ASTORIA / CMA

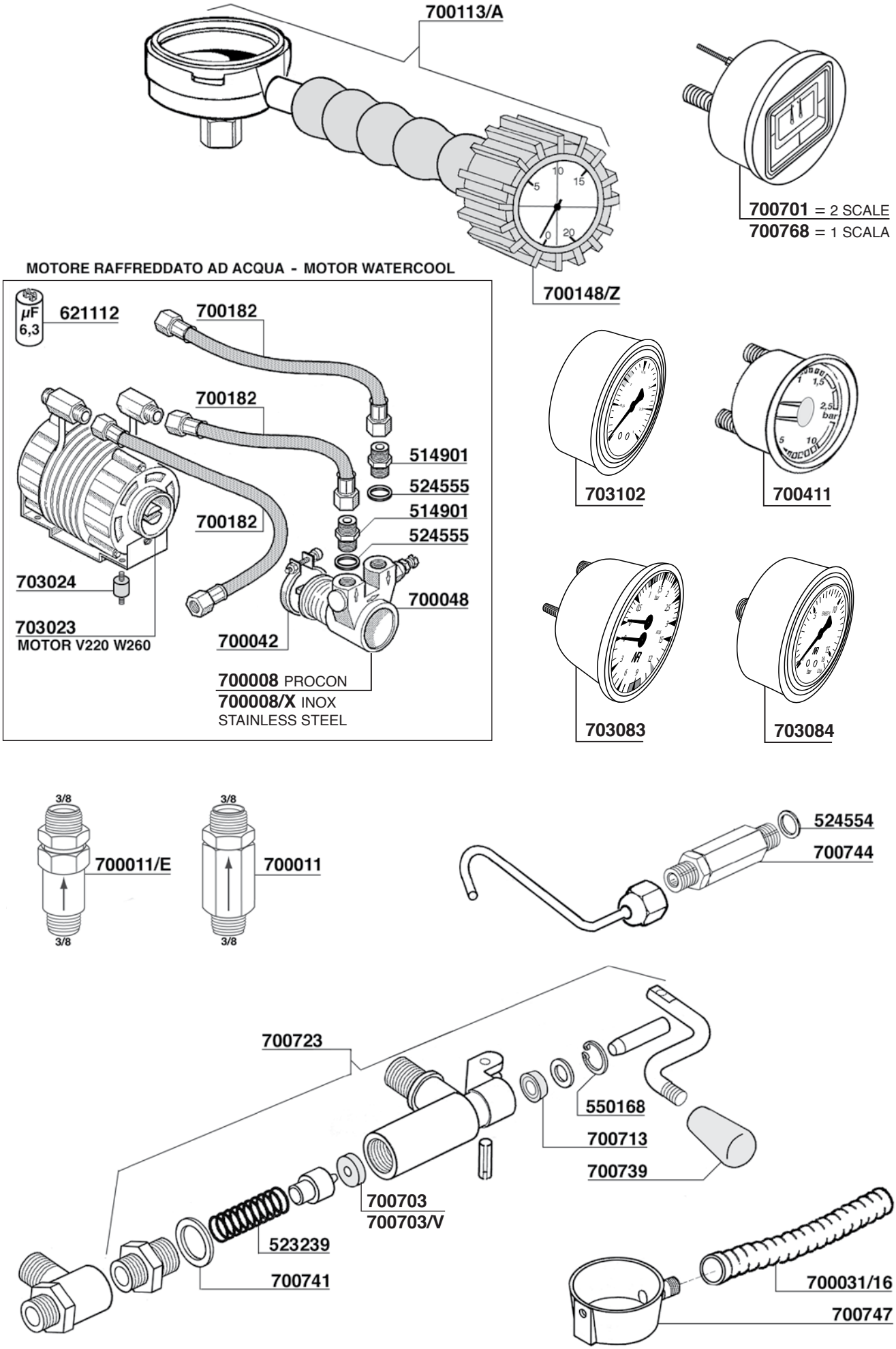
700113/A
700701 = 2 SCALE
700768 = 1 SCALA
700148/Z
MOTORE RAFFREDDATO AD ACQUA - MOTOR WATERCOOL
µF 6,3
621112
700182
700182
514901
524555
514901
524555
700182
703024
703023
MOTOR V220 W260
700042
700048
700008 PROCON
700008/X INOX
STAINLESS STEEL
703102
700411
703083
703084
3/8
700011/E
3/8
3/8
700011
3/8
524554
700744
700723
550168
700713
700739
700703
700703/V
523239
700741
700031/16
700747

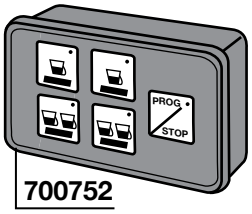

700752
PULSANTIERA
TOUCHPAD

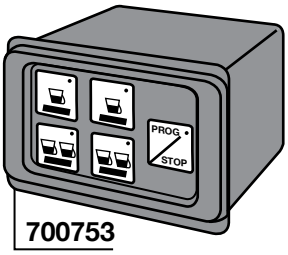

700753
PULSANTIERA - CENTRALINA
TOUCHPAD - ELECTRONIC BOX

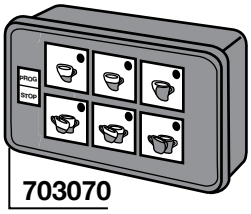

703070
PULSANTIERA - TIMER
TOUCHPAD - TIMER

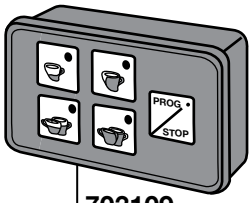

703109
PULSANTIERA
TOUCHPAD

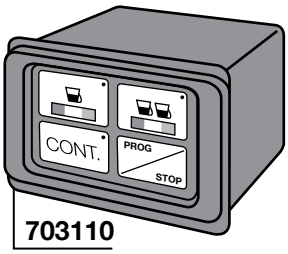

703110
PULSANTIERA - TIMER
TOUCHPAD - TIMER

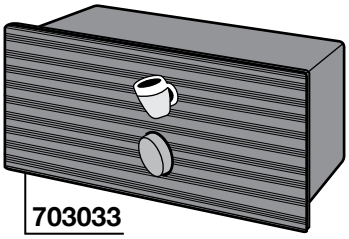

703033
PULSANTIERA MANUALE
MANUAL TOUCHPAD

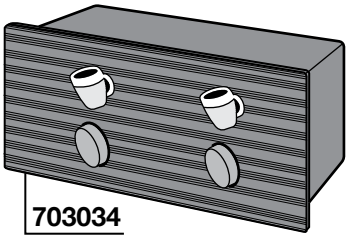

703034
PULSANTIERA MANUALE
MANUAL TOUCHPAD

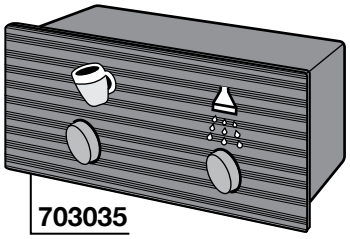

703035
PULSANTIERA MANUALE
MANUAL TOUCHPAD

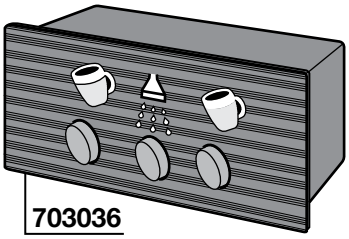

703036
PULSANTIERA MANUALE
MANUAL TOUCHPAD

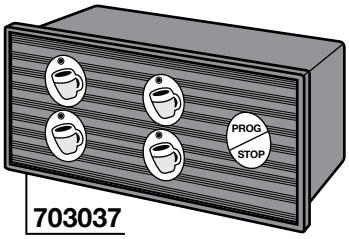

703037
PULSANTIERA
TOUCHPAD

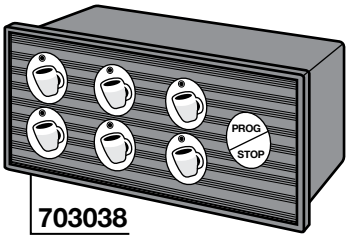

703038
PULSANTIERA
TOUCHPAD

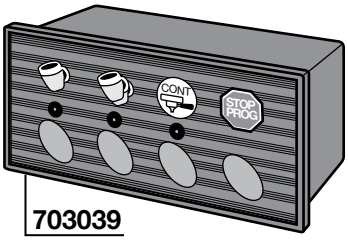

703039
PULSANTIERA - TIMER - LIVELLO
TOUCHPAD - TIMER - LEVEL

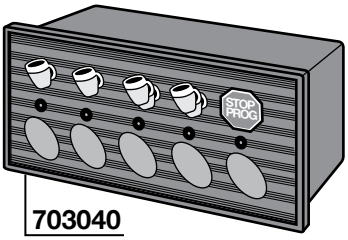

703040
PULSANTIERA - THE' - LIVELLO
TOUCHPAD - TEA - LEVEL

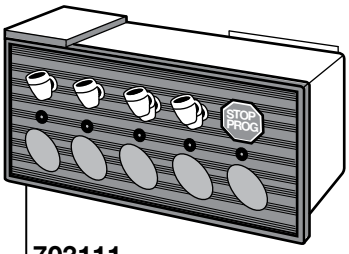

703111
PULSANTIERA
TOUCHPAD

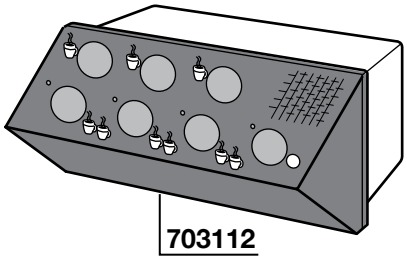

703112
PULSANTIERA
TOUCHPAD

ASTORIA / CMA

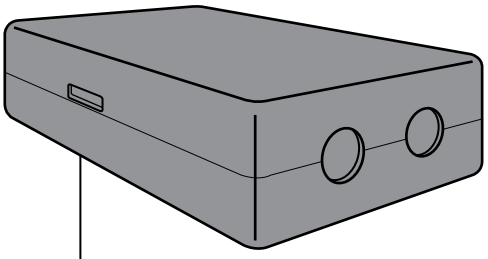

703041 230V
703042 120V

CENTRALINA DIVINA 1/2/3 GRUPPI
DIVINA ELECTRONIC BOX 1/2/3 GROUPS

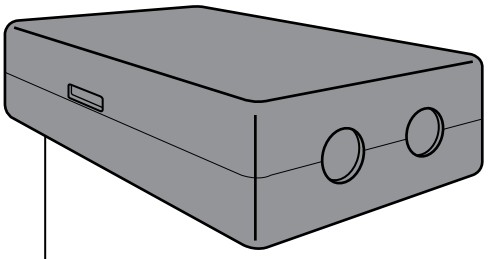

703100 1-3GR 230V PLUS1
703101 1-4GR PLUS2 GICAR CODE 9.5.21.40 G00
703106 1-3GR 230V PLUS3

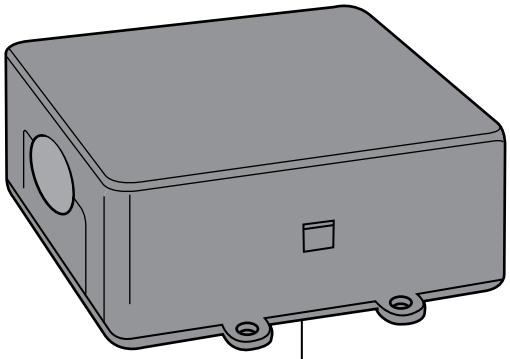

703099 GICAR CODE 9.5.24.21 G

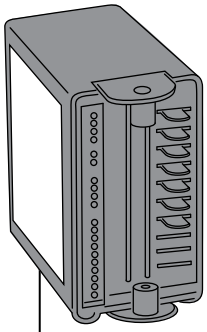

703107 GICAR CODE 9.5.37.08 G01
703108 GICAR CODE 9.5.37.07 G01

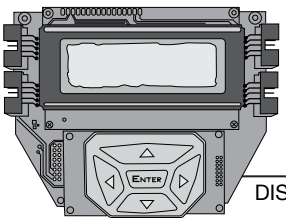

700799
DISPLAY P4Y-09

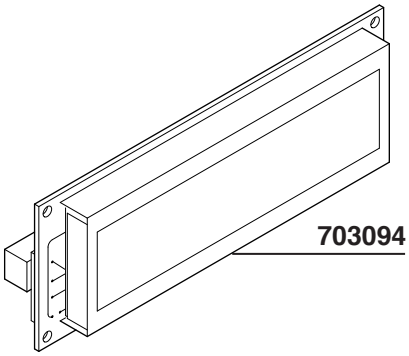

703094

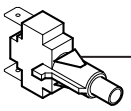

703095

703096

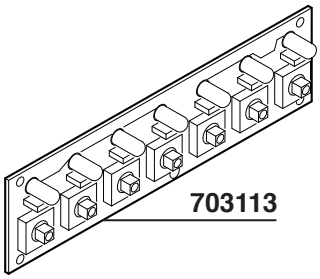

703113

703097

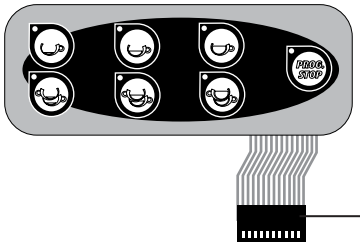

703114

703093
BLACK

703031
BIPOLAR SWITCH

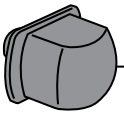

703059
CROMATO
CHROME PLATED

703098

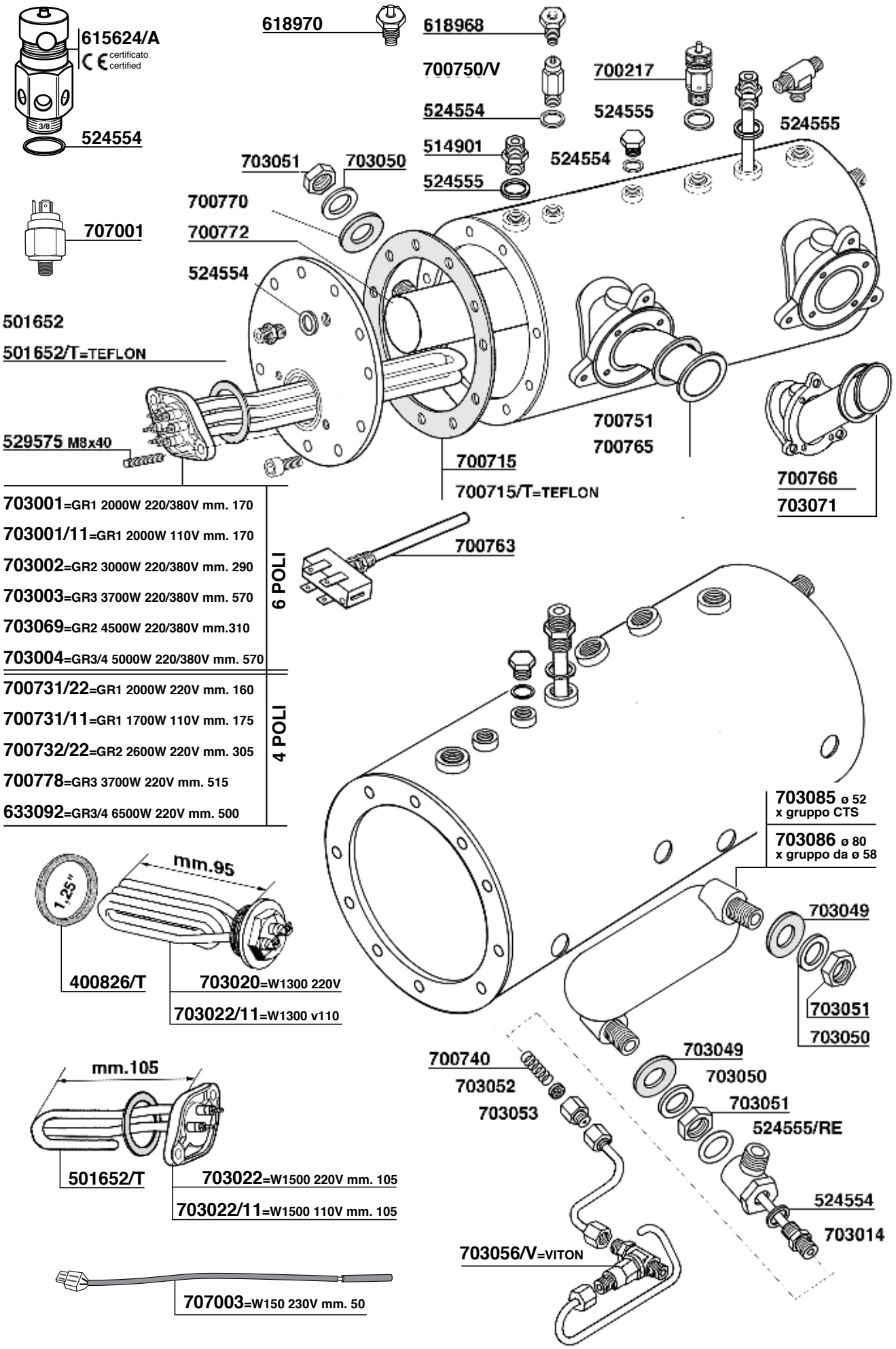

703001=GR1 2000W 220/380V mm. 170	6 POLI
703001/11=GR1 2000W 110V mm. 170	6 POLI
703002=GR2 3000W 220/380V mm. 290	6 POLI
703003=GR3 3700W 220/380V mm. 570	6 POLI
703069=GR2 4500W 220/380V mm.310	6 POLI
703004=GR3/4 5000W 220/380V mm. 570	6 POLI
700731/22=GR1 2000W 220V mm. 160	4 POLI
700731/11=GR1 1700W 110V mm. 175	4 POLI
700732/22=GR2 2600W 220V mm. 305	4 POLI
700778=GR3 3700W 220V mm. 515	4 POLI
633092=GR3/4 6500W 220V mm. 500	4 POLI

NUOVA RICAMBI AURORA-BRUGNETTI Tav. 01

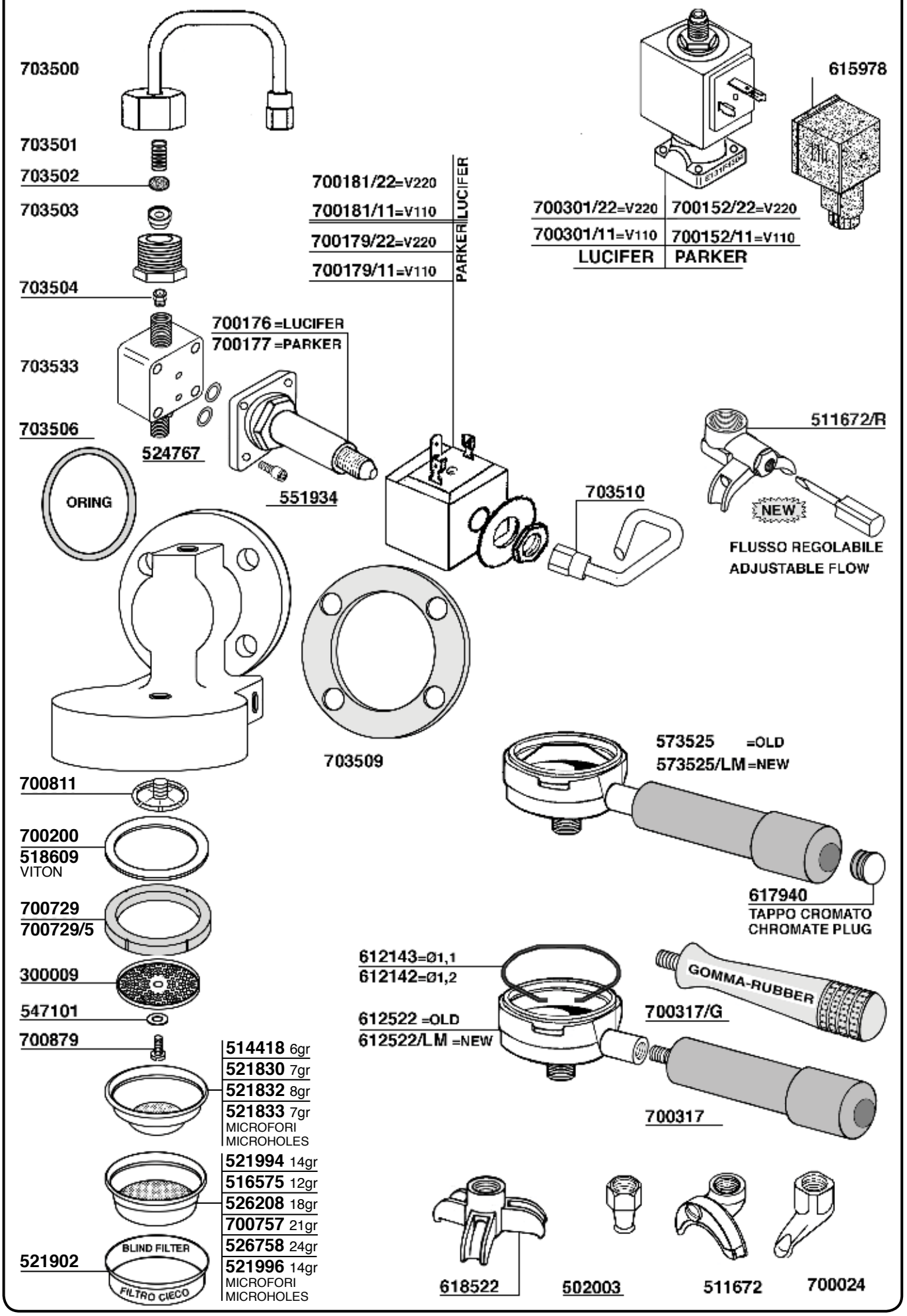

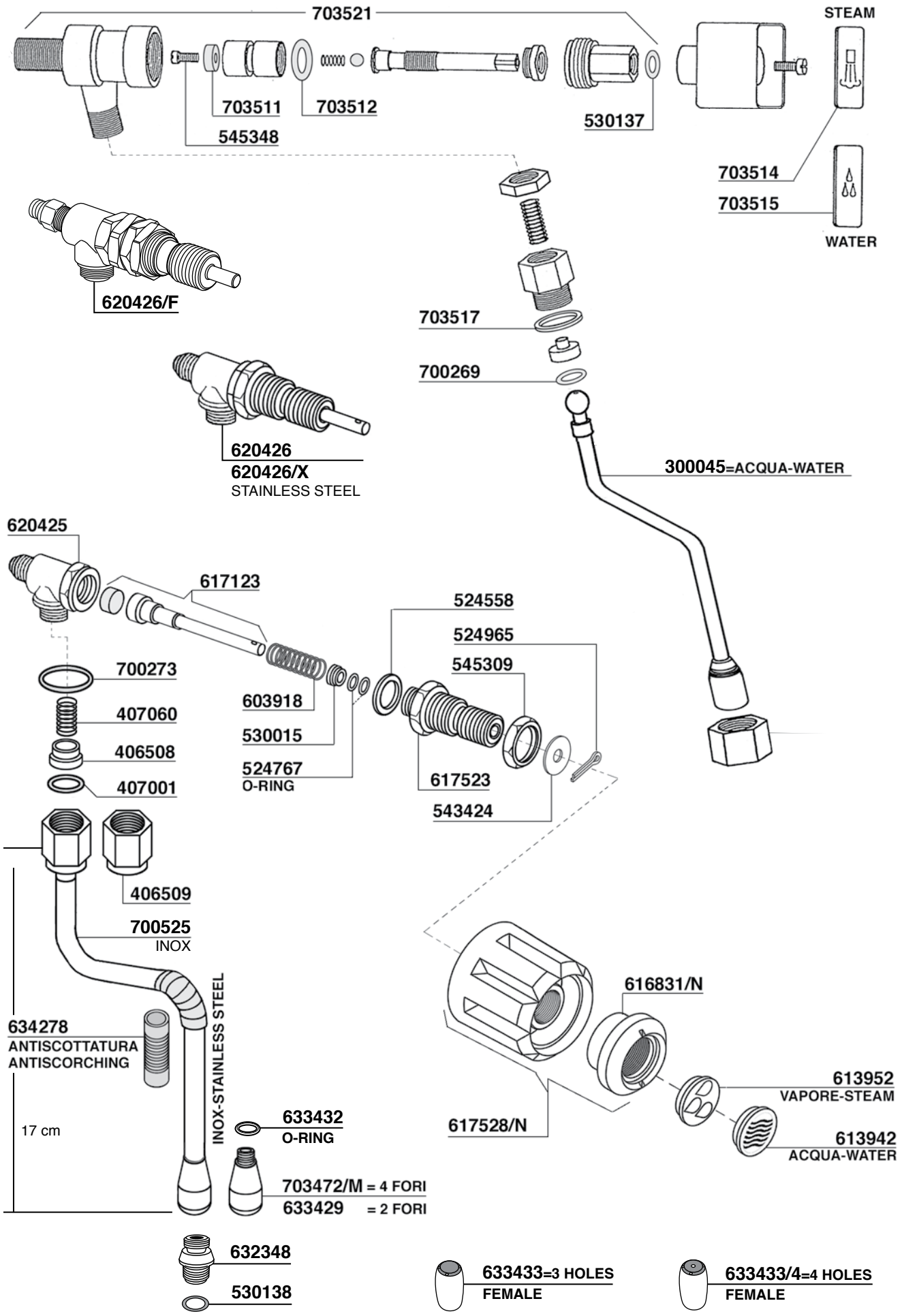
703521
STEAM
703511
703512
545348
530137
703514
703515
WATER
620426/F
703517
700269
620426
620426/X
STAINLESS STEEL
300045=ACQUA-WATER
620425
617123
524558
524965
545309
700273
603918
407060
530015
406508
524767
O-RING
407001
617523
543424
406509
700525
INOX
INOX-STAINLESS STEEL
616831/N
634278
ANTISCOTTATURA
ANTISCORCHING
613952
VAPORE-STEAM
17 cm
633432
O-RING
617528/N
613942
ACQUA-WATER
703472/M = 4 FORI
633429 = 2 FORI
632348
530138
633433=3 HOLES
FEMALE
633433/4=4 HOLES
FEMALE

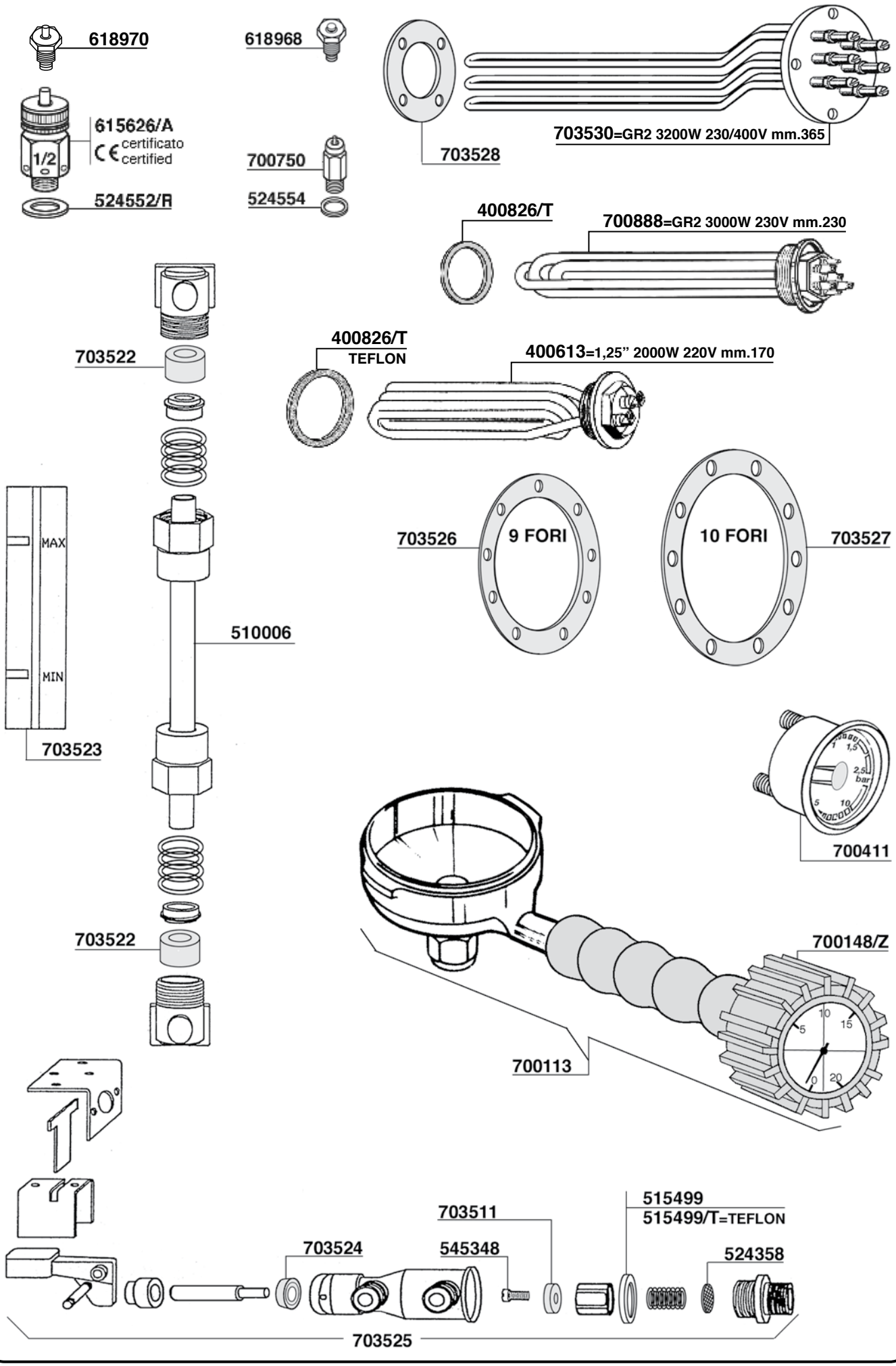
618970
618968
615626/A
certificato
certified
1/2
700750
524552/R
524554
703528
703530=GR2 3200W 230/400V mm.365
400826/T
700888=GR2 3000W 230V mm.230
703522
400826/T
TEFLON
400613=1,25" 2000W 220V mm.170
MAX
MIN
703523
510006
703526
9 FORI
10 FORI
703527
700411
703522
700148/Z
700113
703511
515499
515499/T=TEFLON
703524
545348
524358
703525

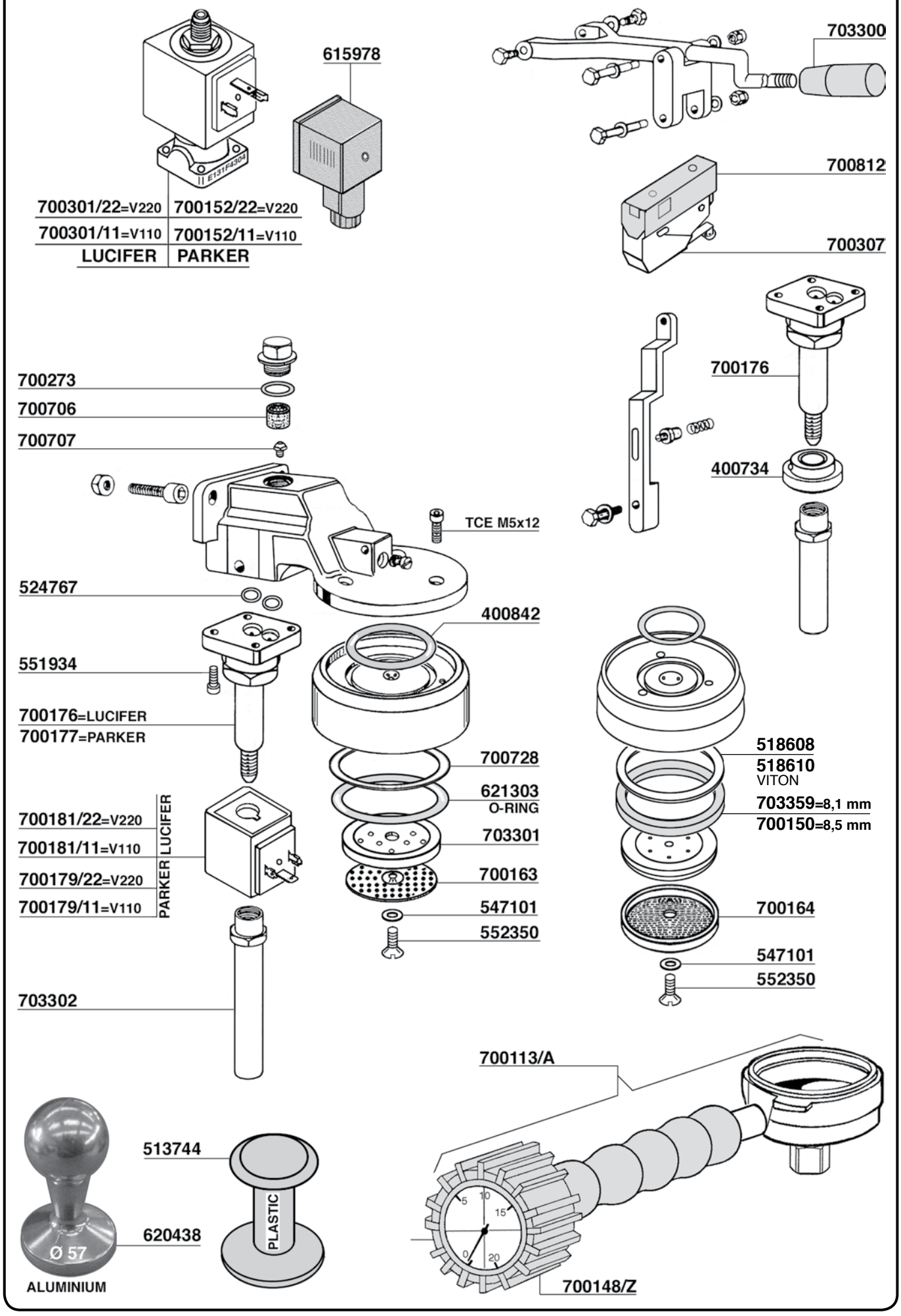
615978
703300
700812
700307
700301/22=V220
700301/11=V110
LUCIFER
700152/22=V220
700152/11=V110
PARKER
700273
700706
700707
TCE M5x12
700176
400734
524767
400842
551934
700176=LUCIFER
700177=PARKER
700728
621303
O-RING
703301
700163
547101
552350
518608
518610
VITON
703359=8,1 mm
700150=8,5 mm
700164
547101
552350
700181/22=V220
700181/11=V110
700179/22=V220
700179/11=V110
LUCIFER
PARKER
703302
700113/A
513744
620438
PLASTIC
Ø 57
ALUMINIUM
700148/Z

BEZZERA

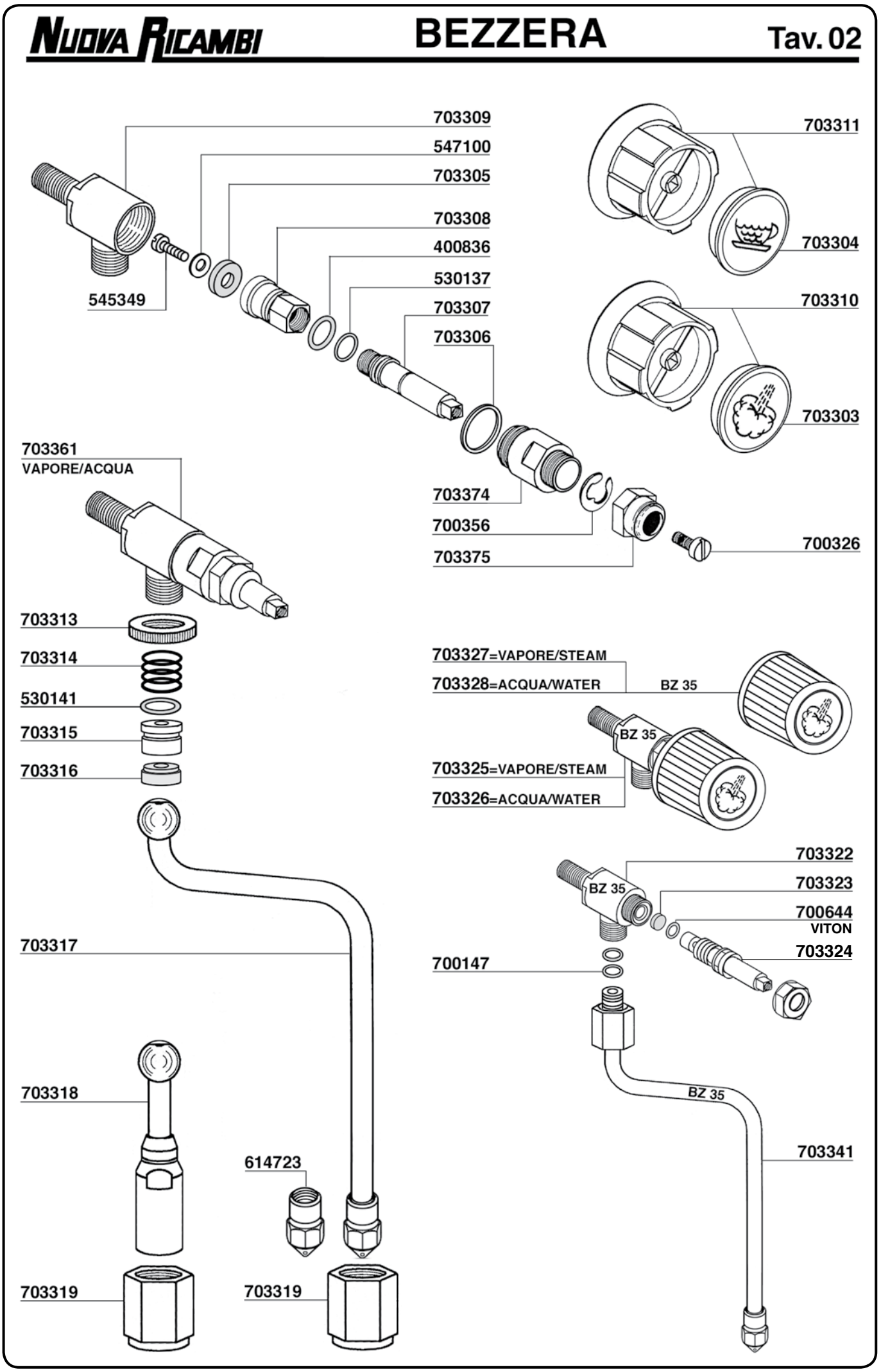
703309
547100
703305
703308
400836
530137
703307
703306
545349
703311
703304
703310
703303
703361
VAPORE/ACQUA
703374
700356
703375
700326
703313
703314
530141
703315
703316
703327=VAPORE/STEAM
703328=ACQUA/WATER
BZ 35
BZ 35
703325=VAPORE/STEAM
703326=ACQUA/WATER
703322
BZ 35
703323
700644
VITON
703324
700147
703317
703318
BZ 35
703341
614723
703319
703319

NUOVA RICAMBI BEZZERA Tav. 03

ELLISSE

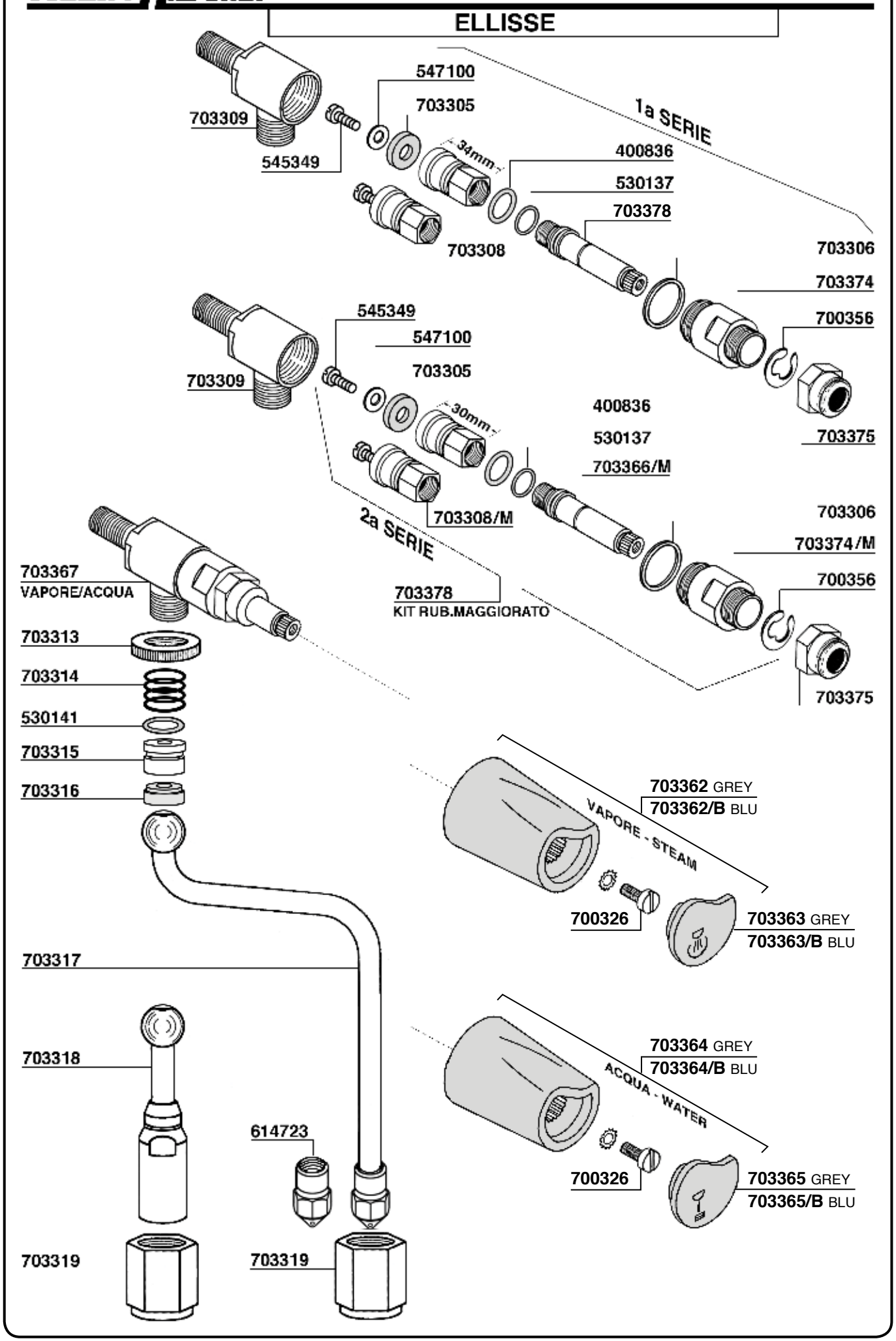

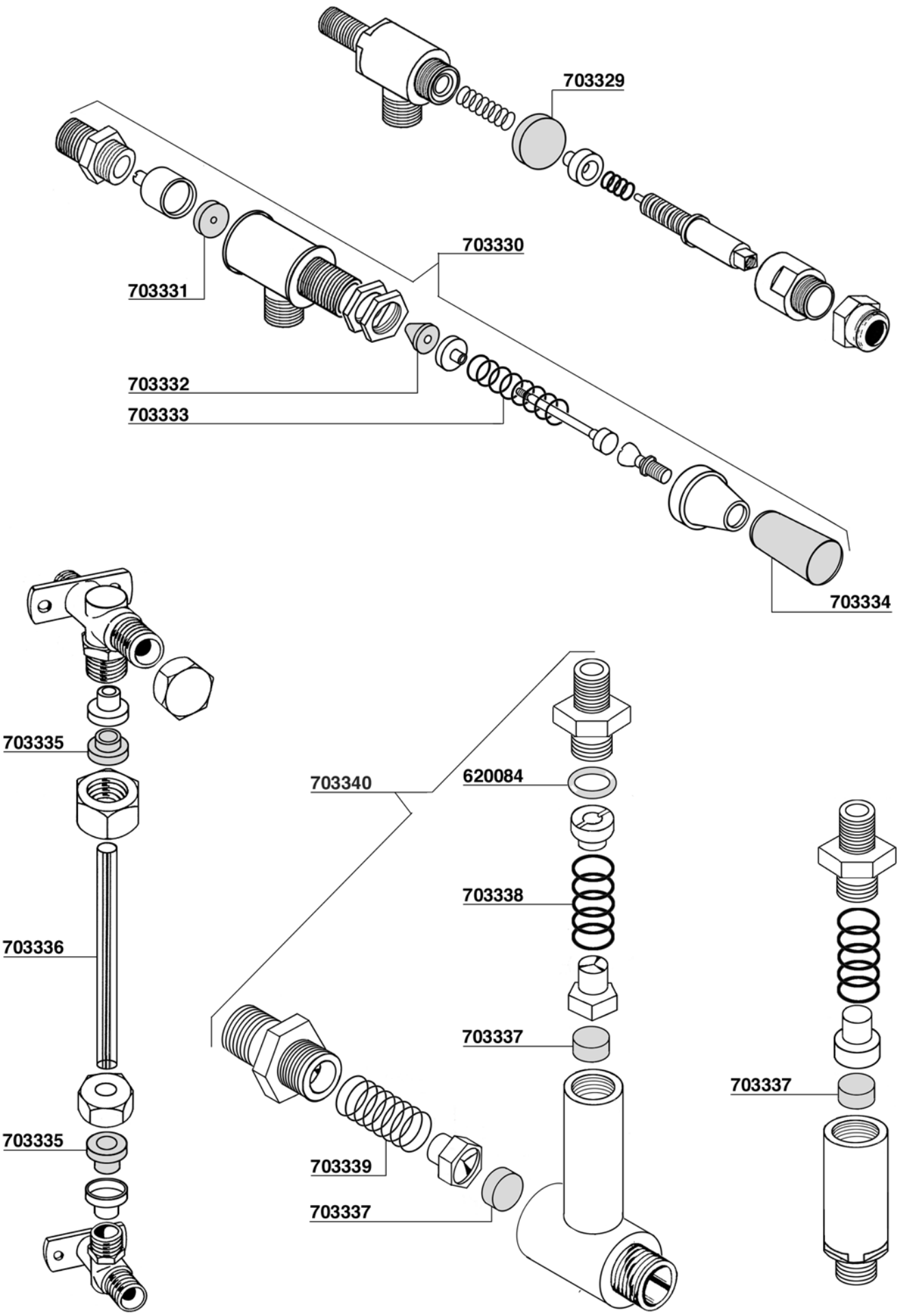
703329
703330
703331
703332
703333
703334
703335
703336
703335
703340
620084
703338
703337
703339
703337
703337

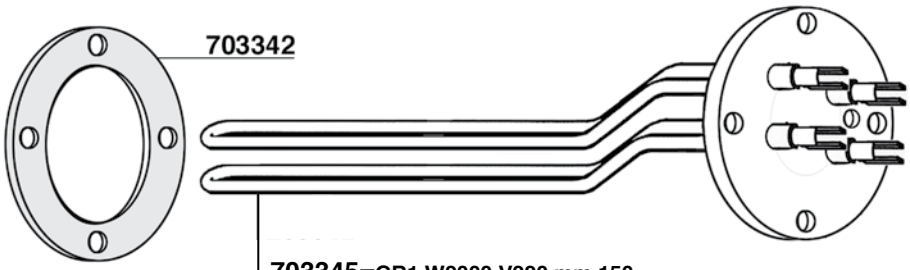

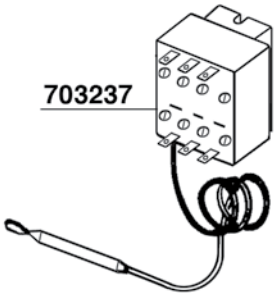

703345=GR1 W2000 V220 mm.150
703345/11=GR1 W1400 V110 INCOLOY mm.150
703346=GR2 W3500 V220 mm.340
703376=GR3 W5000 V220 mm.540

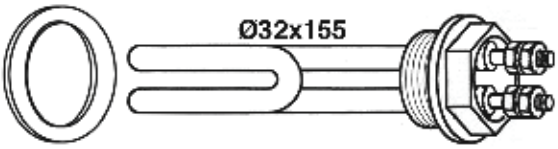

703348 =V220 W1350
703348/11 =V110 W1350

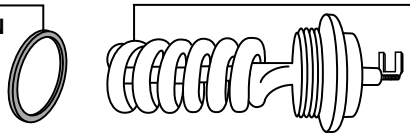

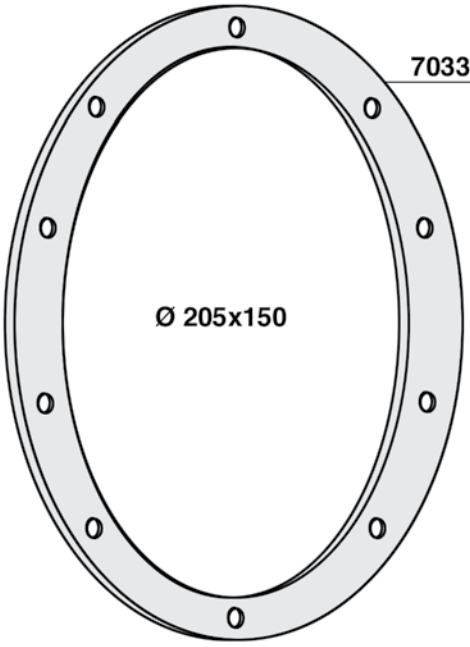

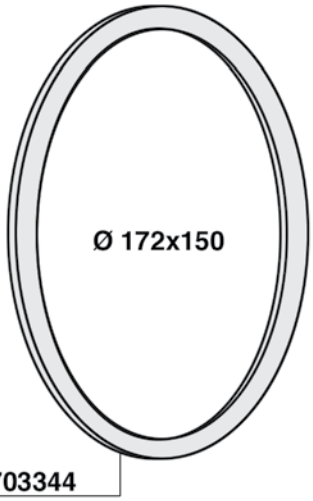

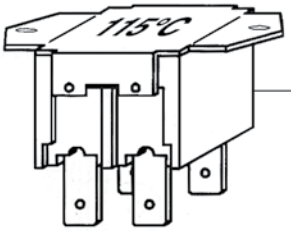

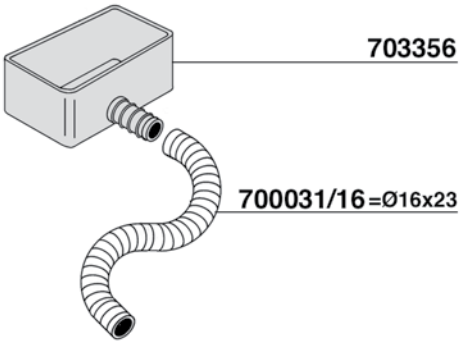

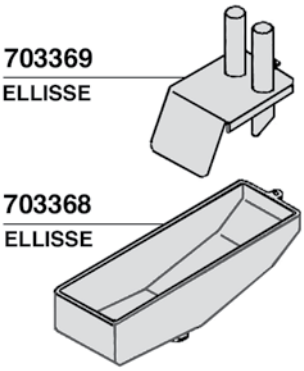

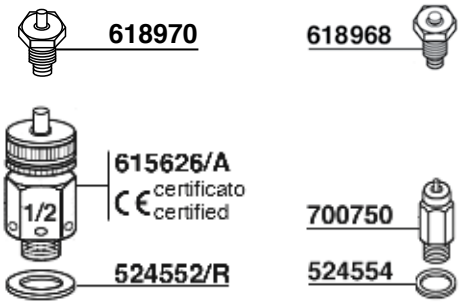

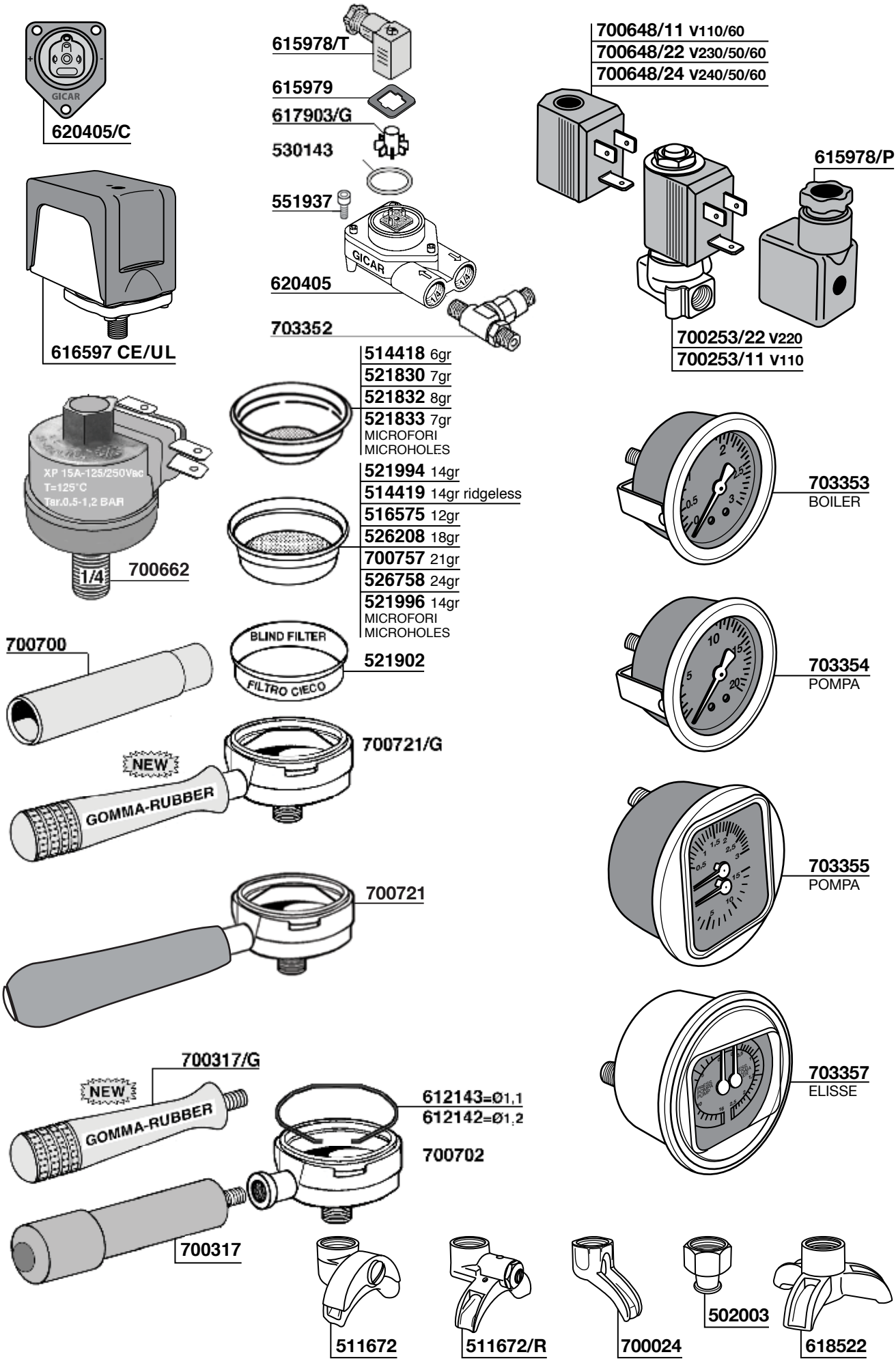
620405/C
616597 CE/UL
615978/T
615979
617903/G
530143
551937
620405
703352
700648/11 V110/60
700648/22 V230/50/60
700648/24 V240/50/60
615978/P
700253/22 V220
700253/11 V110
514418 6gr
521830 7gr
521832 8gr
521833 7gr
MICROFORI
MICROHOLES
521994 14gr
514419 14gr ridgeless
516575 12gr
526208 18gr
700757 21gr
526758 24gr
521996 14gr
MICROFORI
MICROHOLES
XP 15A-125/250Vac
T=125°C
Tar.0.5-1,2 BAR
1/4
700662
703353
BOILER
703354
POMPA
703355
POMPA
703357
ELISSE
700700
BLIND FILTER
FILTRO CIECO
521902
NEW
GOMMA-RUBBER
700721/G
700721
700317/G
612143=Ø1,1
612142=Ø1,2
700702
700317
511672
511672/R
700024
502003
618522

703371
Mod. DE

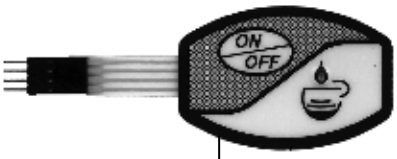

703370

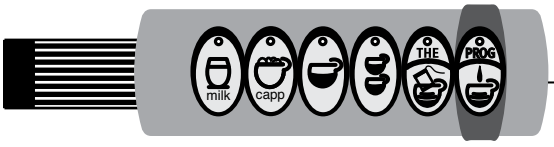

703381

703372

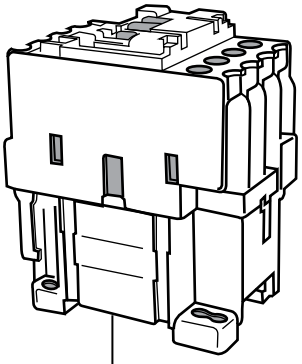

700930 220V
700931 110V

703373
Mod. TE

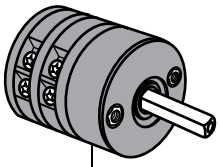

703350

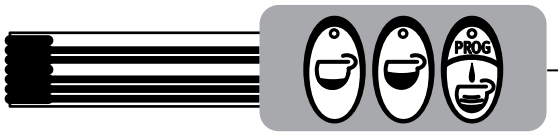

703380

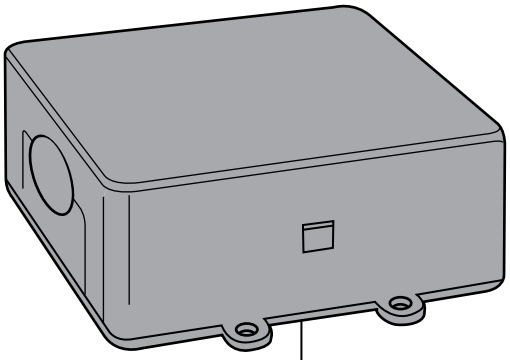

703377
ELLISSE GR1-2-3 220V

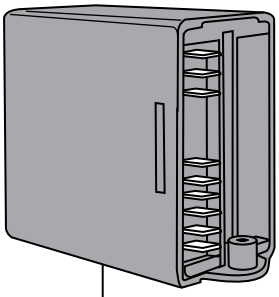

703312 220V
703312/11 110V

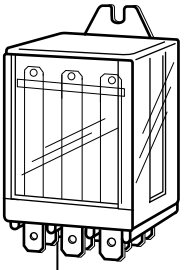

700652/22 220V

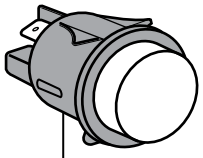

618010 RED
618010/V GREEN

617729/22 220V

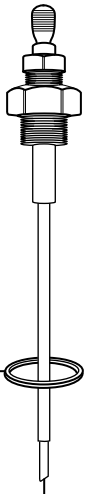

524554

CAPPUCCINO
THERMOMETER
0 - 100 C°

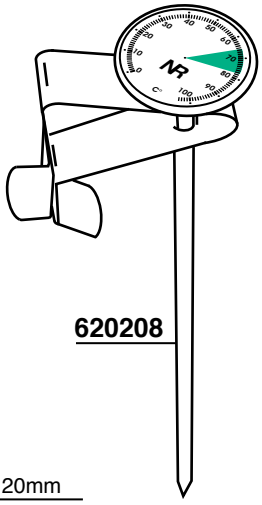

620208

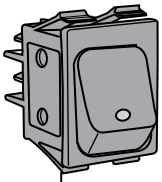

579671 BLACK

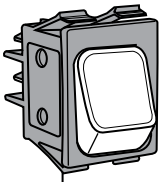

621080

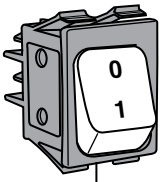

700382 ORANGE

612601 120mm
612601/L 140mm

BFC - ROYAL

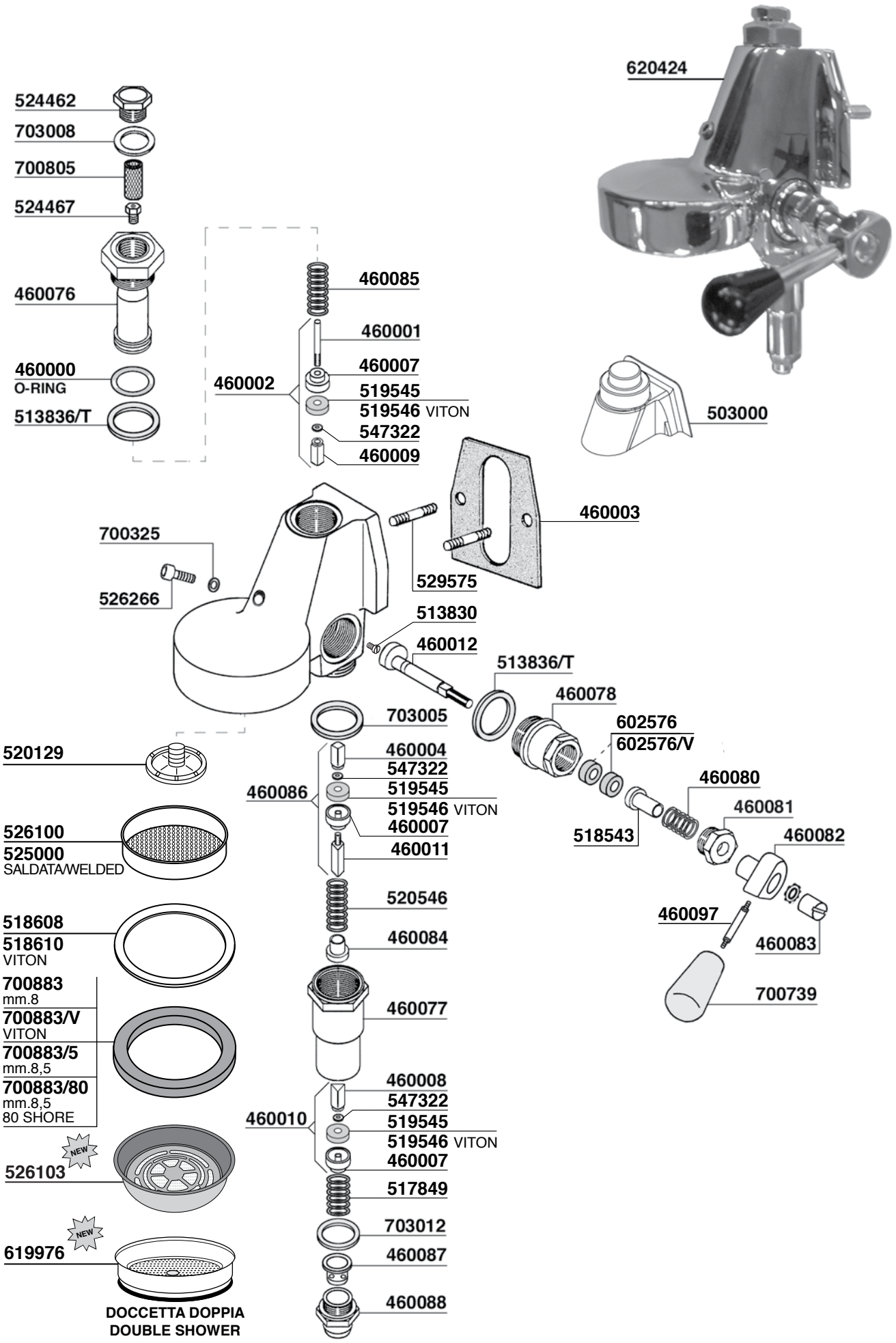
620424
524462
703008
700805
524467
460076
460000
O-RING
513836/T
460085
460001
460007
460002
519545
519546 VITON
547322
460009
503000
460003
700325
526266
529575
513830
460012
513836/T
460078
703005
602576
602576/V
520129
460004
547322
460086
519545
519546 VITON
460007
460011
460080
460081
518543
460082
526100
525000
SALDATA/WELDED
520546
460097
518608
518610
VITON
460084
460083
700883
mm.8
700883/V
VITON
700883/5
mm.8,5
700883/80
mm.8,5
80 SHORE
460077
700739
460008
547322
460010
519545
519546 VITON
460007
NEW
526103
517849
703012
NEW
619976
460087
460088
DOCCETTA DOPPIA
DOUBLE SHOWER

BFC - ROYAL

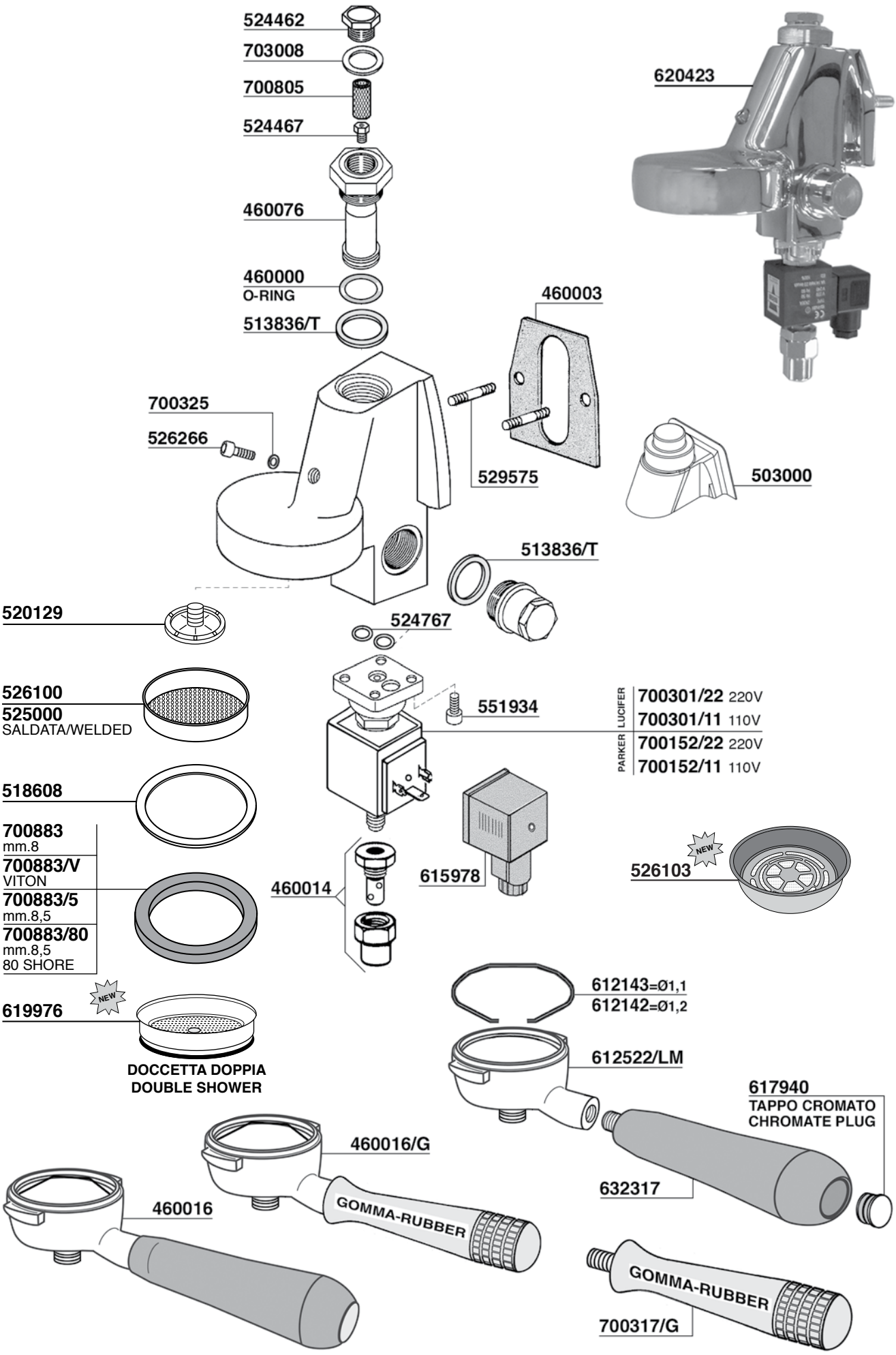
524462
703008
700805
524467
460076
460000
O-RING
513836/T
620423
460003
700325
526266
529575
503000
513836/T
520129
524767
526100
525000
SALDATA/WELDED
551934
PARKER LUCIFER
700301/22 220V
700301/11 110V
700152/22 220V
700152/11 110V
518608
700883
mm.8
700883/V
VITON
700883/5
mm.8,5
700883/80
mm.8,5
80 SHORE
460014
615978
NEW
526103
NEW
619976
DOCCETTA DOPPIA
DOUBLE SHOWER
612143=Ø1,1
612142=Ø1,2
612522/LM
617940
TAPPO CROMATO
CHROMATE PLUG
460016/G
GOMMA-RUBBER
632317
460016
GOMMA-RUBBER
700317/G

BFC - ROYAL

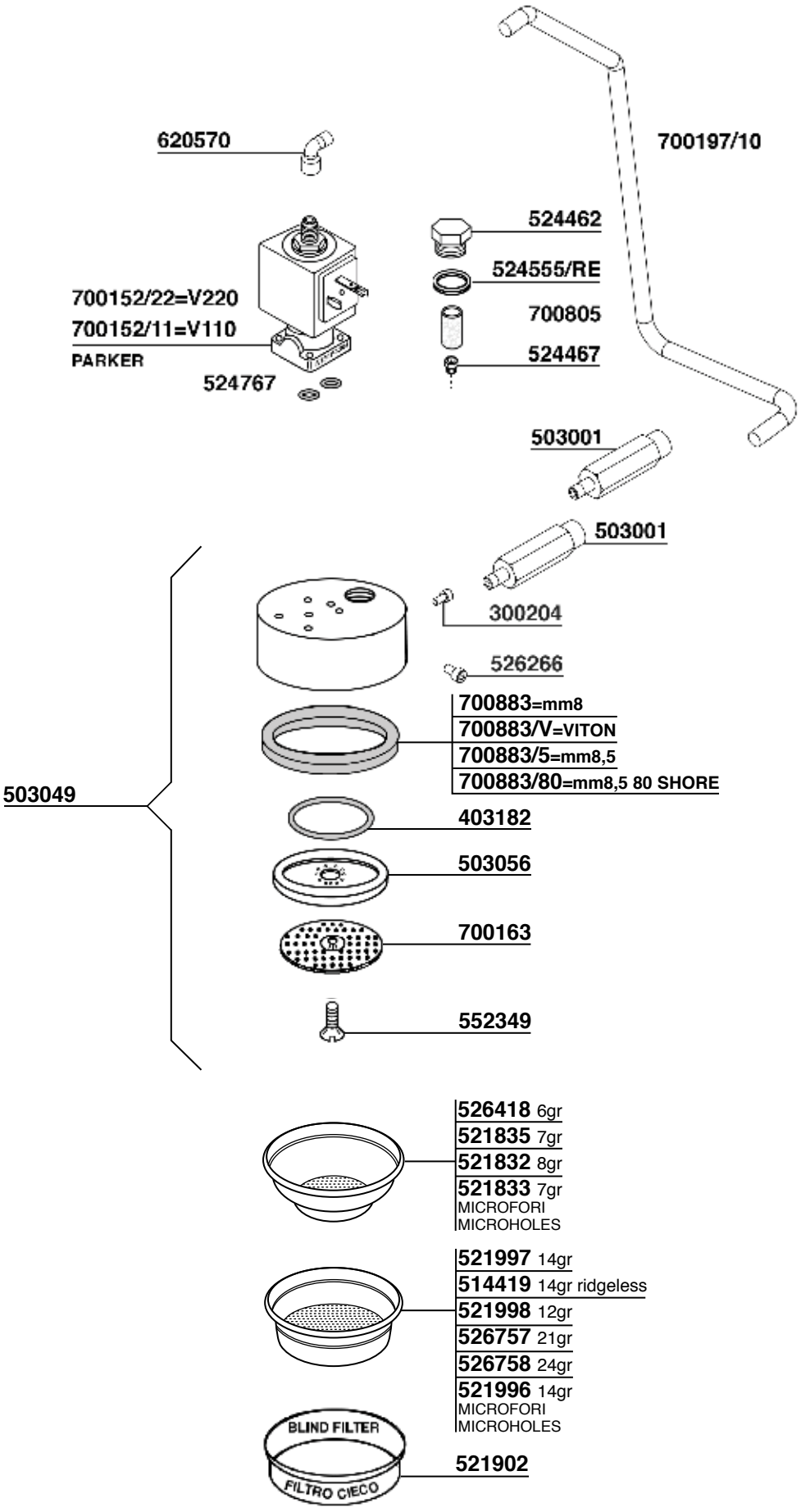
620570
700197/10
524462
524555/RE
700805
524467
700152/22=V220
700152/11=V110
PARKER
524767
503001
503001
300204
526266
700883=mm8
700883/V=VITON
700883/5=mm8,5
700883/80=mm8,5 80 SHORE
503049
403182
503056
700163
552349
526418 6gr
521835 7gr
521832 8gr
521833 7gr
MICROFORI
MICROHOLES
521997 14gr
514419 14gr ridgeless
521998 12gr
526757 21gr
526758 24gr
521996 14gr
MICROFORI
MICROHOLES
BLIND FILTER
FILTRO CIECO
521902

BFC - ROYAL

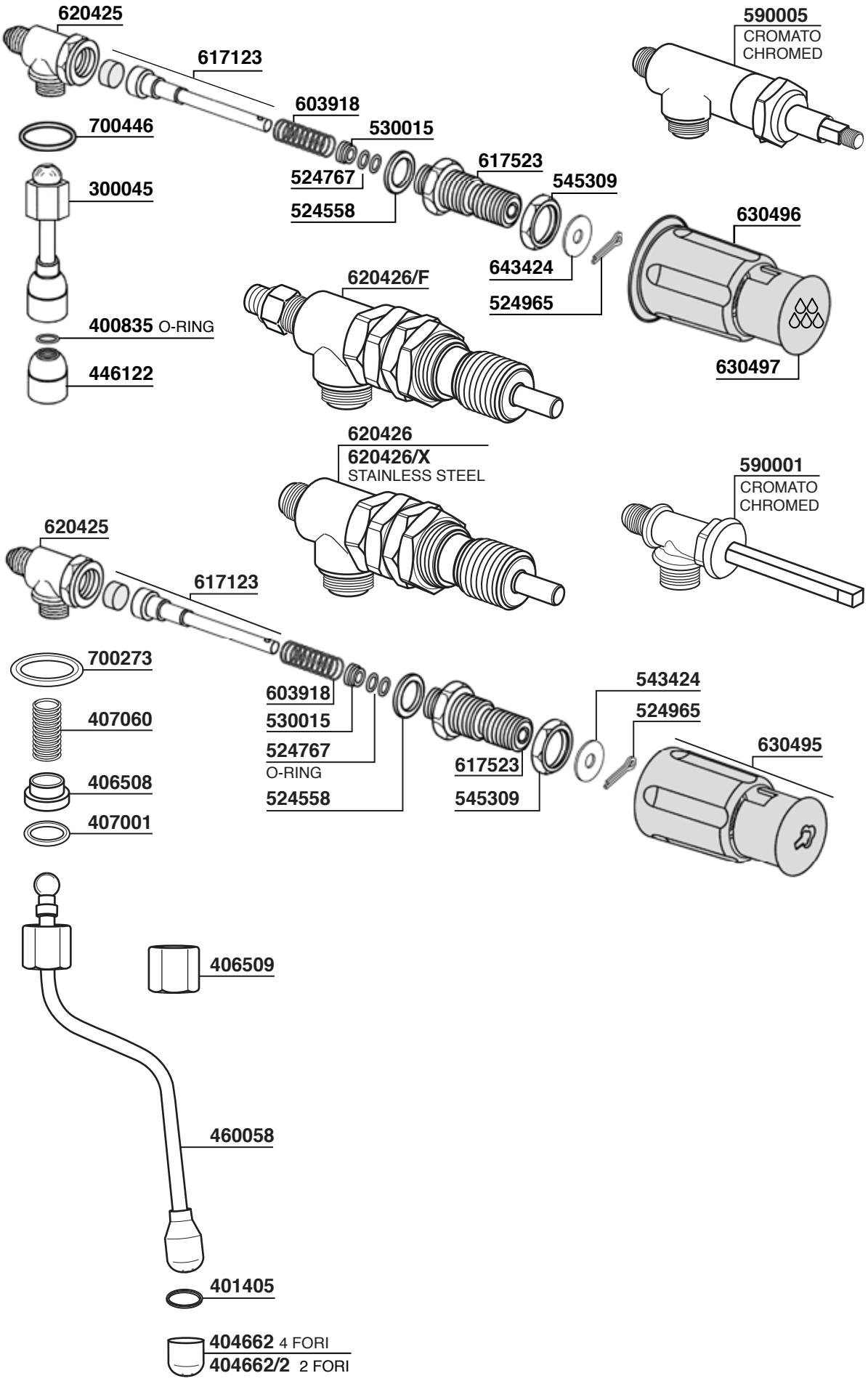
620425
617123
603918
530015
700446
524767
524558
617523
545309
590005
CROMATO
CHROMED
300045
643424
524965
630496
620426/F
400835 O-RING
446122
630497
620426
620426/X
STAINLESS STEEL
590001
CROMATO
CHROMED
620425
617123
700273
603918
530015
524767
O-RING
524558
543424
524965
407060
617523
545309
630495
406508
407001
406509
460058
401405
404662 4 FORI
404662/2 2 FORI

BFC - ROYAL

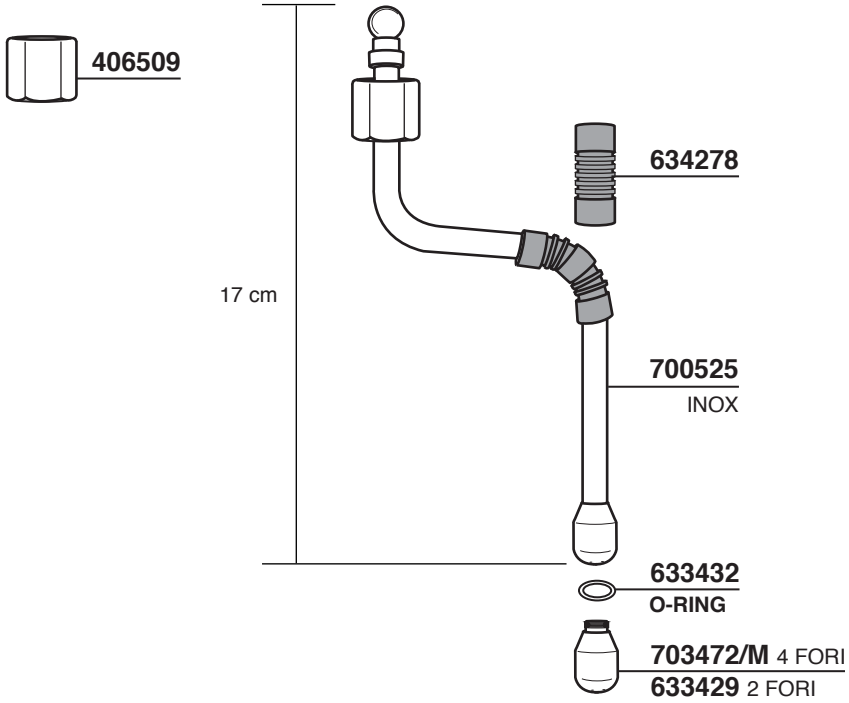
406509
634278
17 cm
700525
INOX
633432
O-RING
703472/M 4 FORI
633429 2 FORI

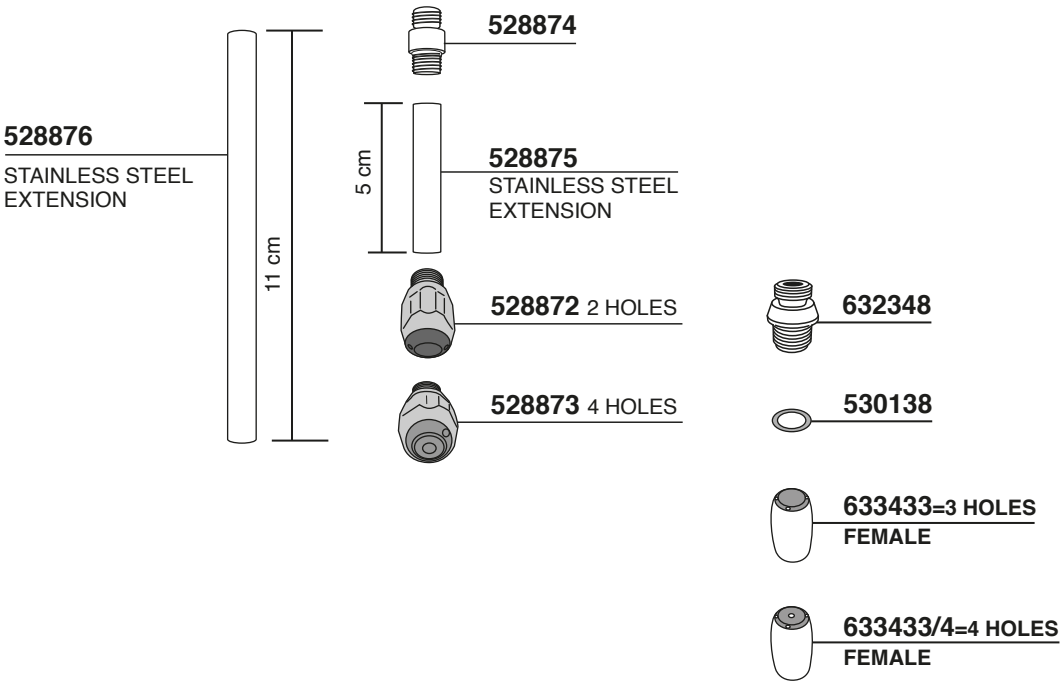
528874
528876
STAINLESS STEEL
EXTENSION
5 cm
528875
STAINLESS STEEL
EXTENSION
11 cm
528872 2 HOLES
632348
528873 4 HOLES
530138
633433=3 HOLES
FEMALE
633433/4=4 HOLES
FEMALE

BFC - ROYAL

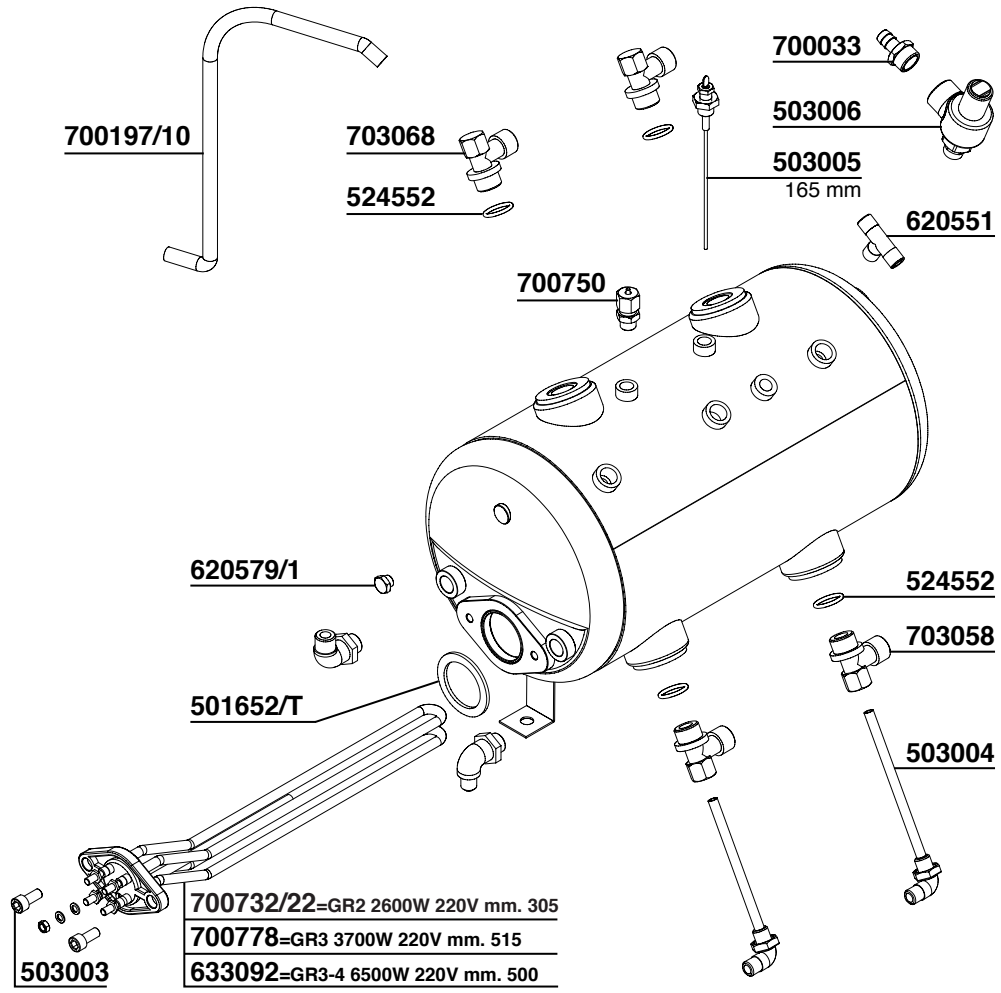
700033
503006
700197/10
703068
503005
165 mm
524552
620551
700750
620579/1
524552
703058
501652/T
503004
700732/22=GR2 2600W 220V mm. 305
700778=GR3 3700W 220V mm. 515
503003
633092=GR3-4 6500W 220V mm. 500

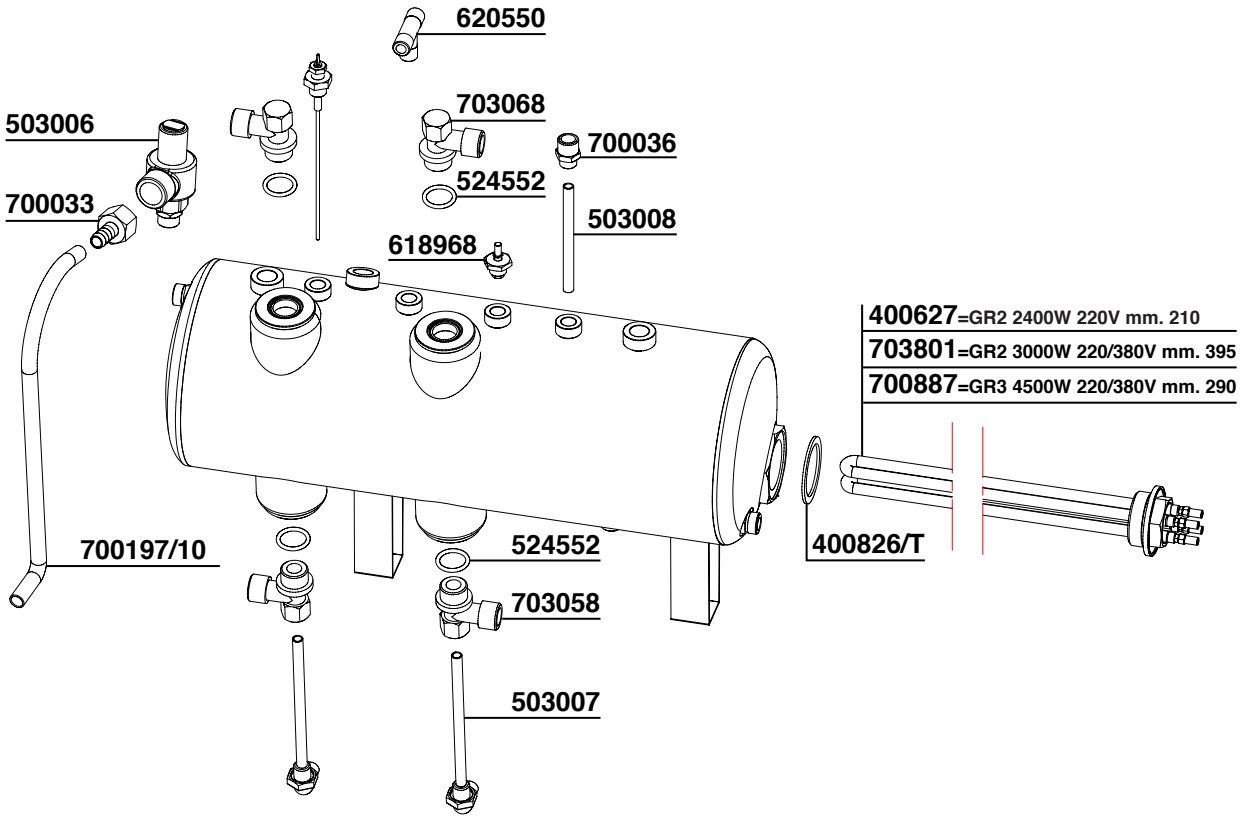
620550
503006
703068
700036
700033
524552
503008
618968
400627=GR2 2400W 220V mm. 210
703801=GR2 3000W 220/380V mm. 395
700887=GR3 4500W 220/380V mm. 290
700197/10
524552
400826/T
703058
503007

BFC - ROYAL

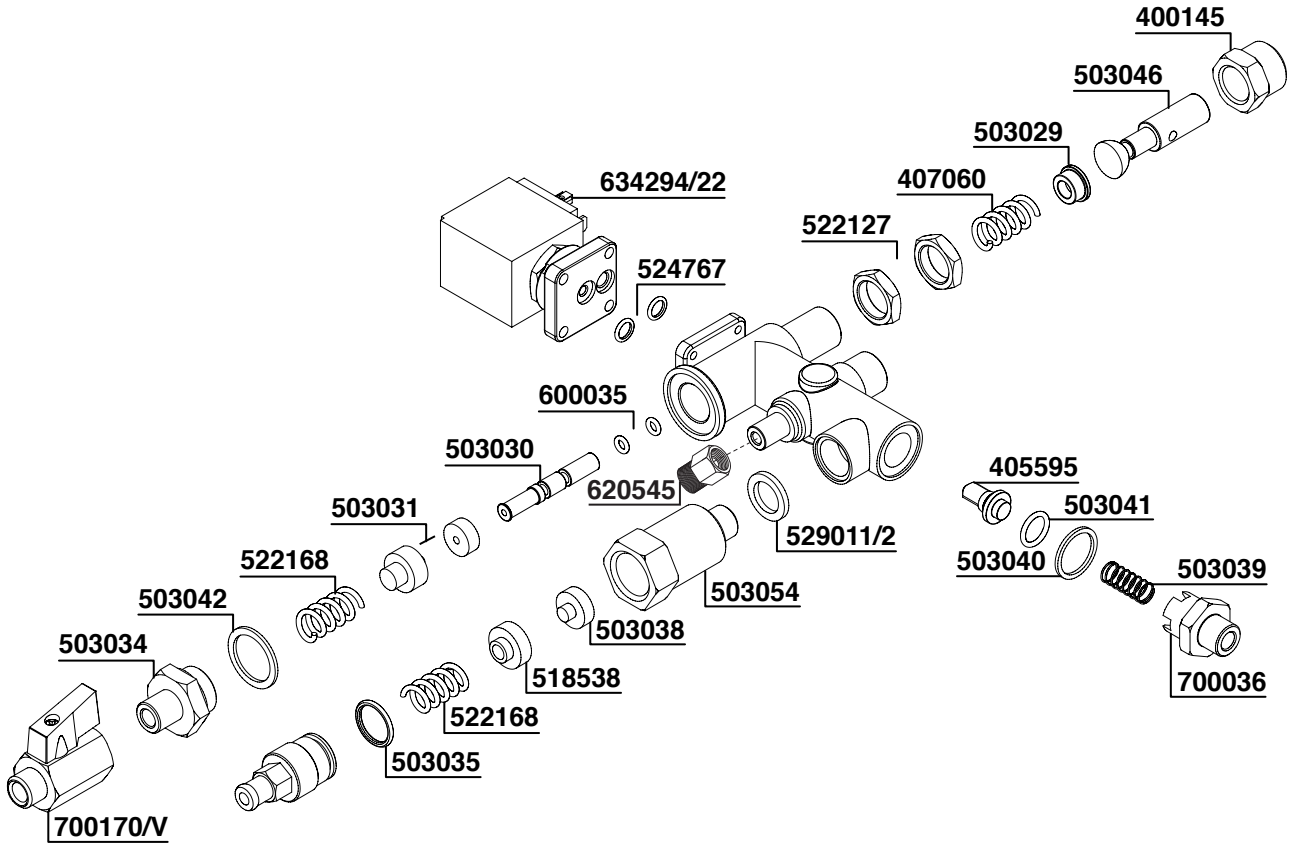
400145
503046
503029
407060
522127
634294/22
524767
600035
503030
620545
405595
503041
503031
529011/2
503040
503039
522168
503054
503042
503038
503034
518538
700036
522168
503035
700170/V

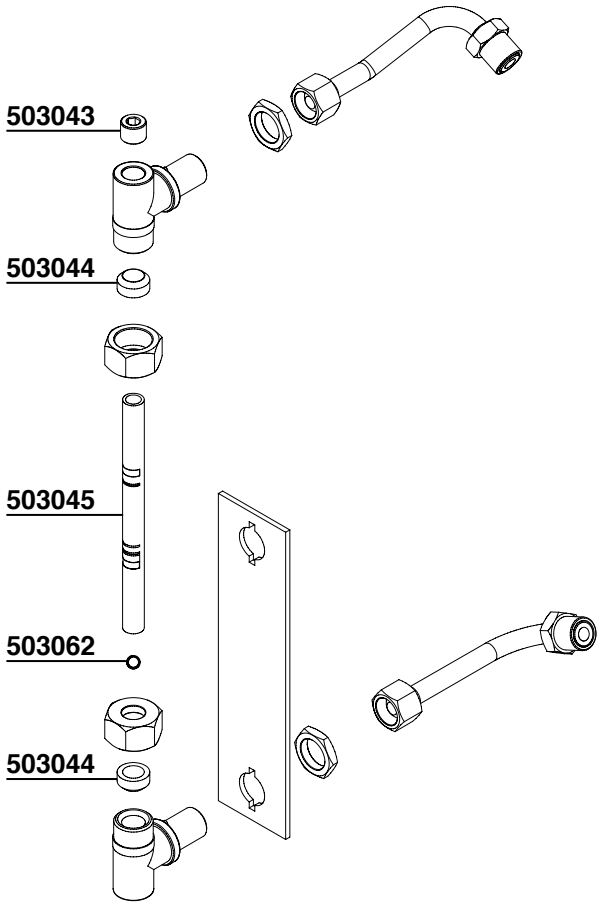
503043
503044
503045
503062
503044

BFC - ROYAL

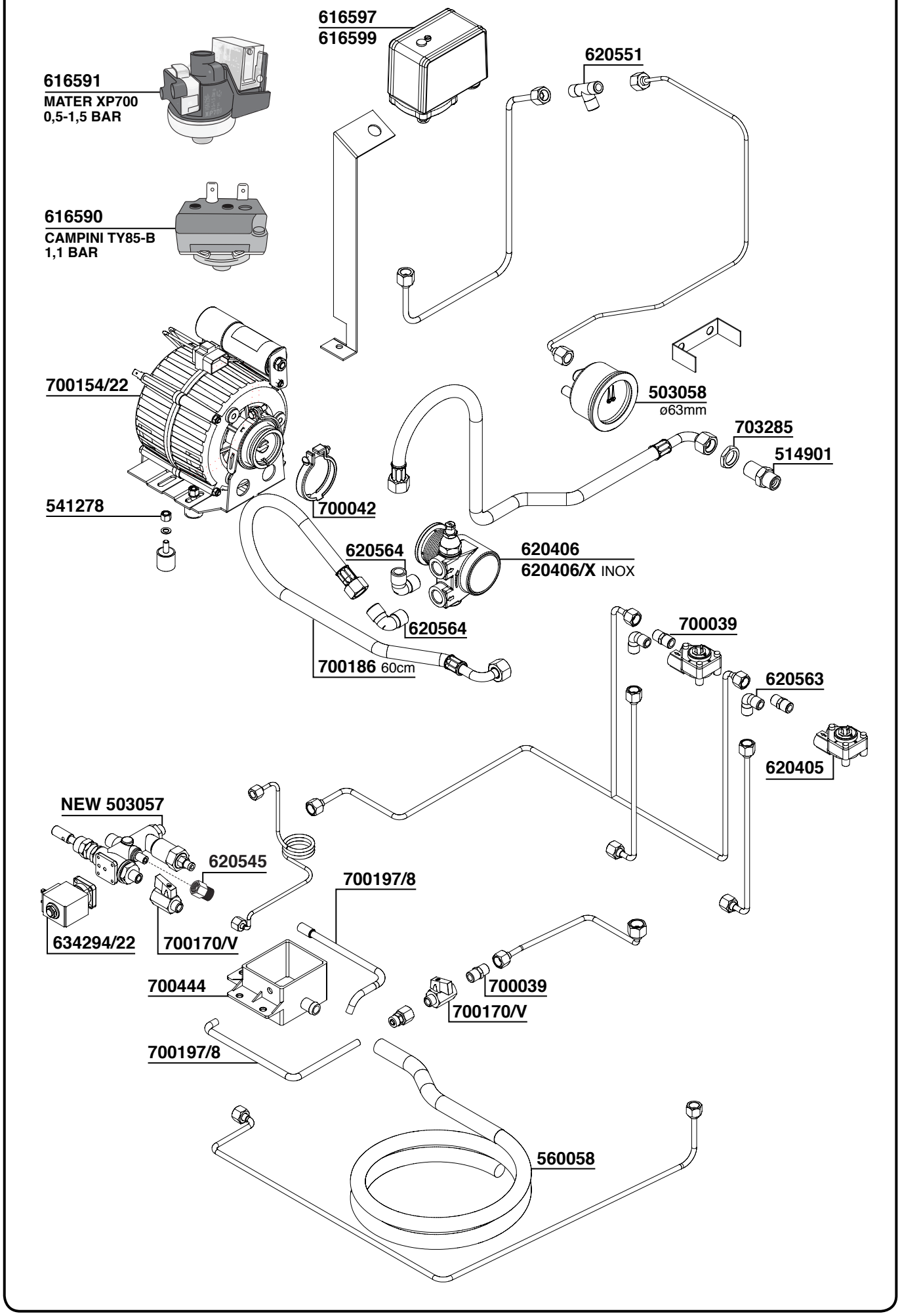
616597
616599
620551
616591
MATER XP700
0,5-1,5 BAR
616590
CAMPINI TY85-B
1,1 BAR
700154/22
503058
ø63mm
703285
514901
541278
700042
620564
620406
620406/X INOX
620564
700039
700186 60cm
620563
620405
NEW 503057
620545
700197/8
634294/22
700170/V
700444
700039
700170/V
700197/8
560058

BFC - ROYAL

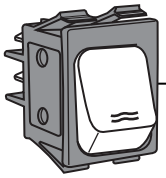

300041

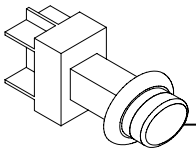

503028

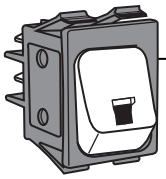

300039

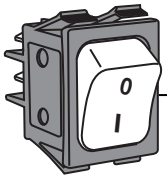

700429

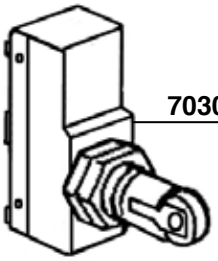

703000

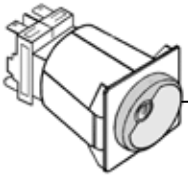

630381
IMPERO,MONZA-IMOLA-
MARANELLO, MONZA-K,
ANTEA, GRANDOGE
DOGARESSA, CLASSICA

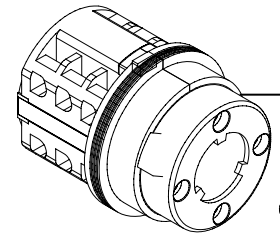

503014 20AMP

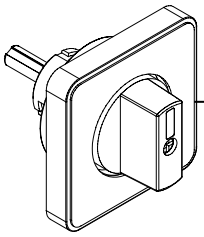

503015
DELUX
MONZA
IMOLA
MARANELLO
GRANDOGE
CLASSICA

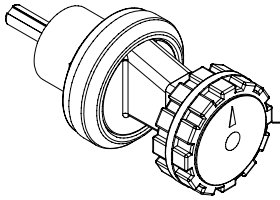

503016
LIRA

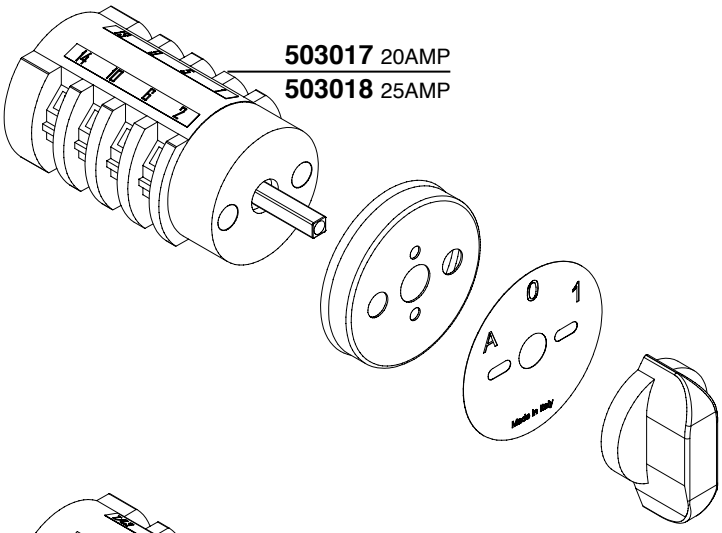

503017 20AMP
503018 25AMP

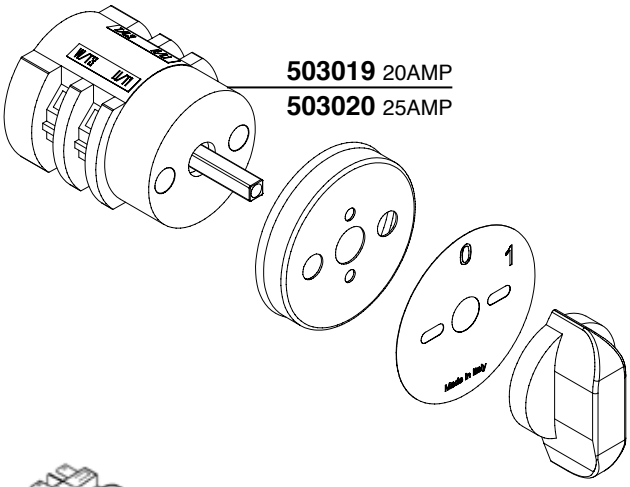

503019 20AMP
503020 25AMP

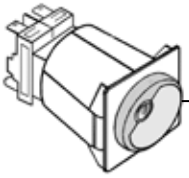

503051
SYNCHRO, DE LUX
VALLELUNGA, LIRA, LIRA-S
OPERA, CLASSICA EVA

BFC - ROYAL

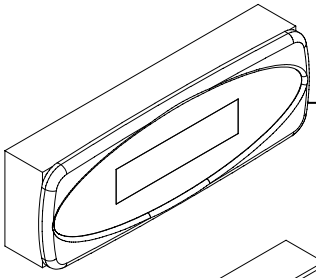

503021

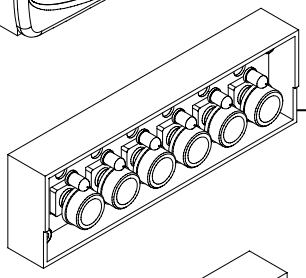

503022

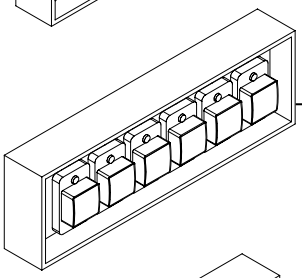

503023

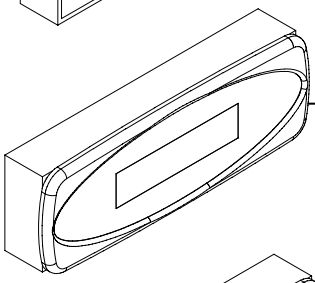

503024

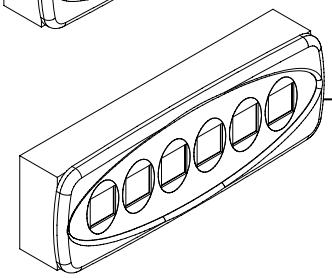

503025

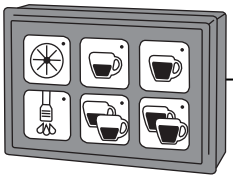

620705

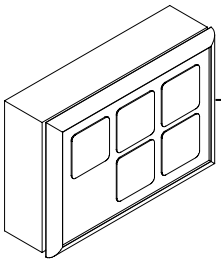

503026

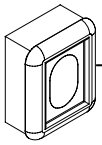

503027

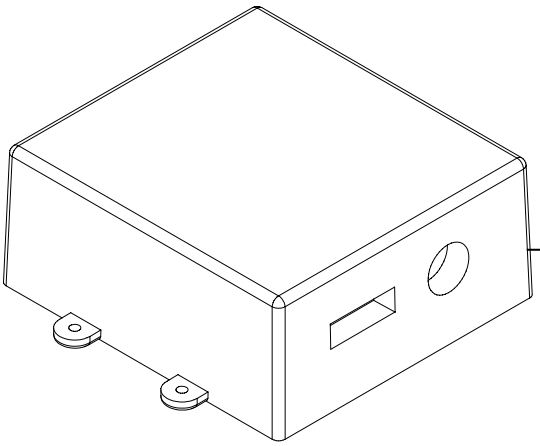

503010
ANTEA
GRANDOGE
CLASSICA

503011
DELUX
MONZA
IMOLA
MARANELLO
LIRA

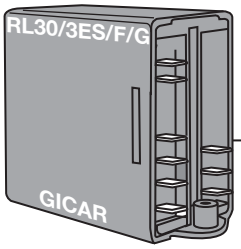

503050

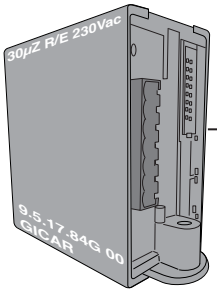

503053

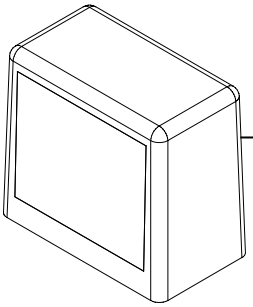

503012
MONZA
IMOLA

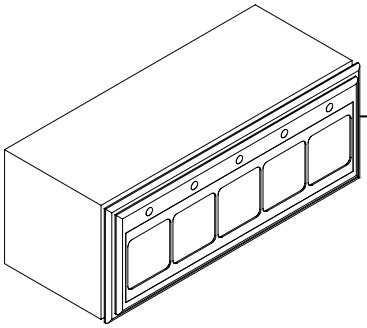

503013
CLASSICA

BFC - ROYAL

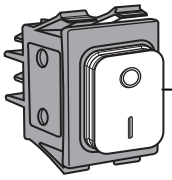

503048

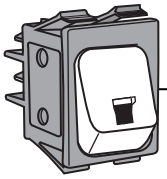

300039

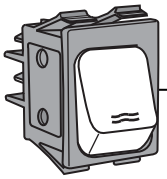

300041

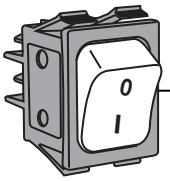

700429

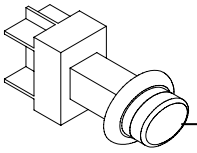

503028

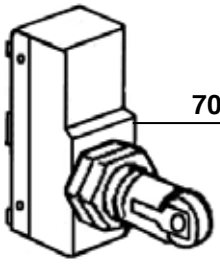

703000

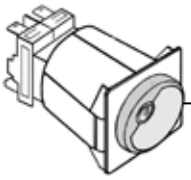

630381
IMPERO, MONZA-IMOLA-
MARANELLO, MONZA-K
ANTEA, GRANDOGE
DOGARESSA, CLASSICA

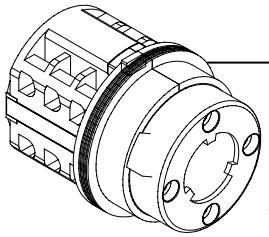

503014 20AMP
503047 32AMP

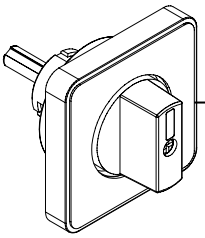

503015
DIADEMA
VALLELUNGA
DOGARESSA

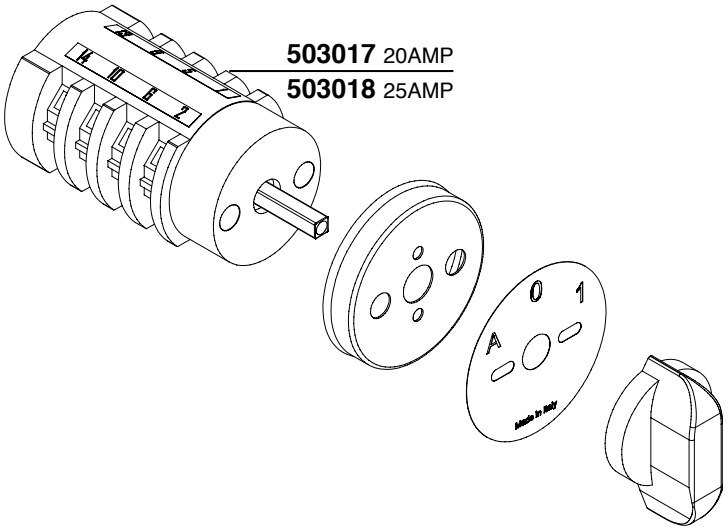

503017 20AMP
503018 25AMP

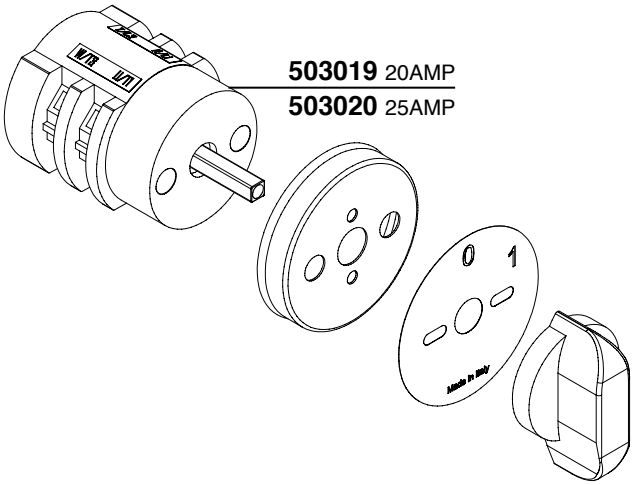

503019 20AMP
503020 25AMP

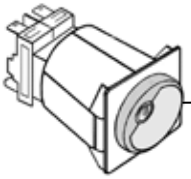

503051
SYNCHRO, DE LUX
VALLELUNGA, LIRA, LIRA-S
OPERA, CLASSICA EVA

BFC - ROYAL

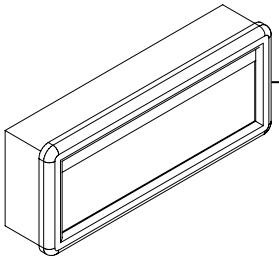

503021

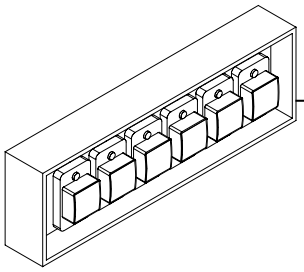

503023

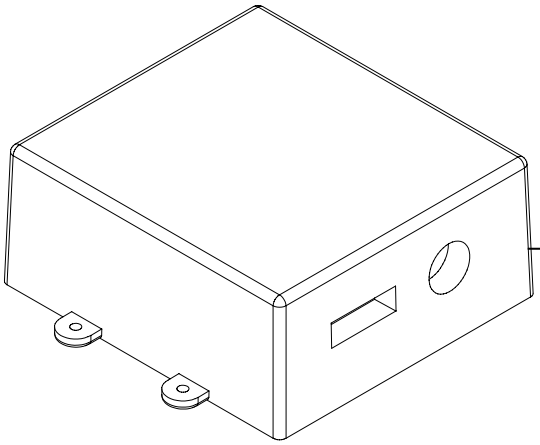

503010
DIADEMA
DOGARESSA
TETIDE
503011
SYNCRO
VALLELUNGA

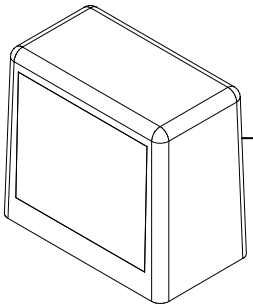

503012
DIADEMA
DOGARESSA
SYNCRO
TETIDE
VALLELUNGA

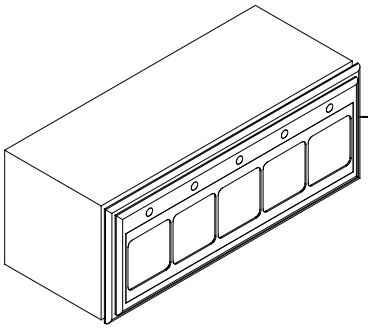

503013
DIADEMA

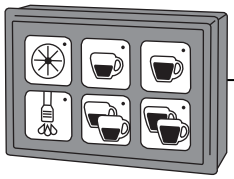

620705

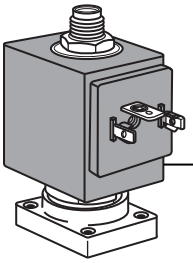

700153/22

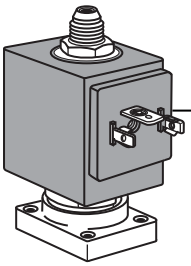

700152/22

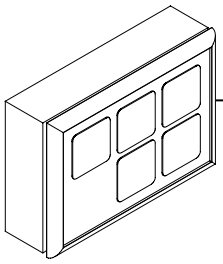

503026

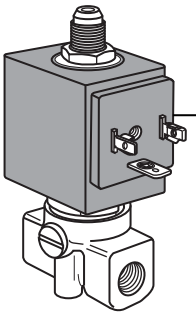

300065

BRASILIA

GRUPPO BE

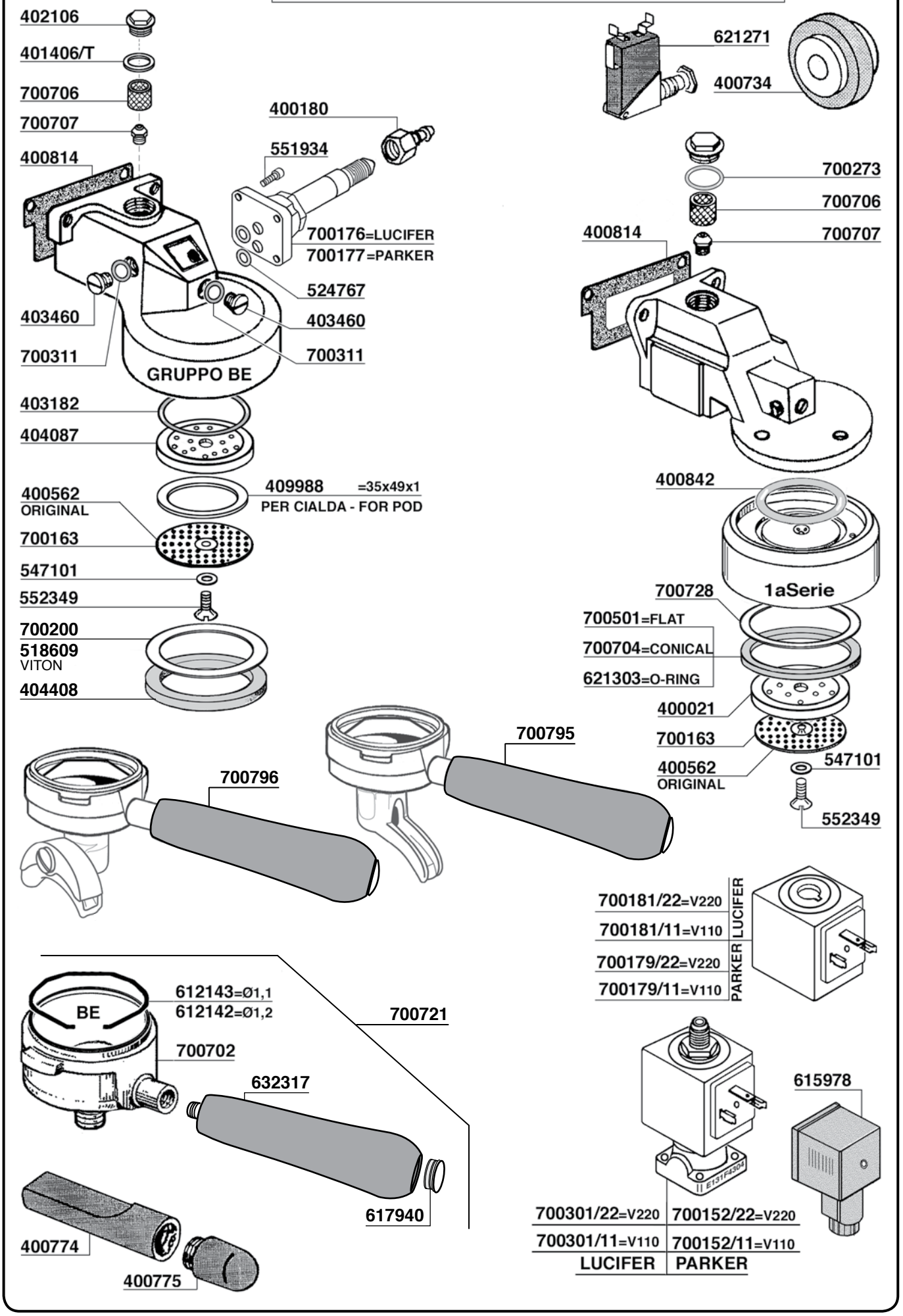

NUOVA RICAMBI — BRASILIA — Tav. 02

GRUPPO B61

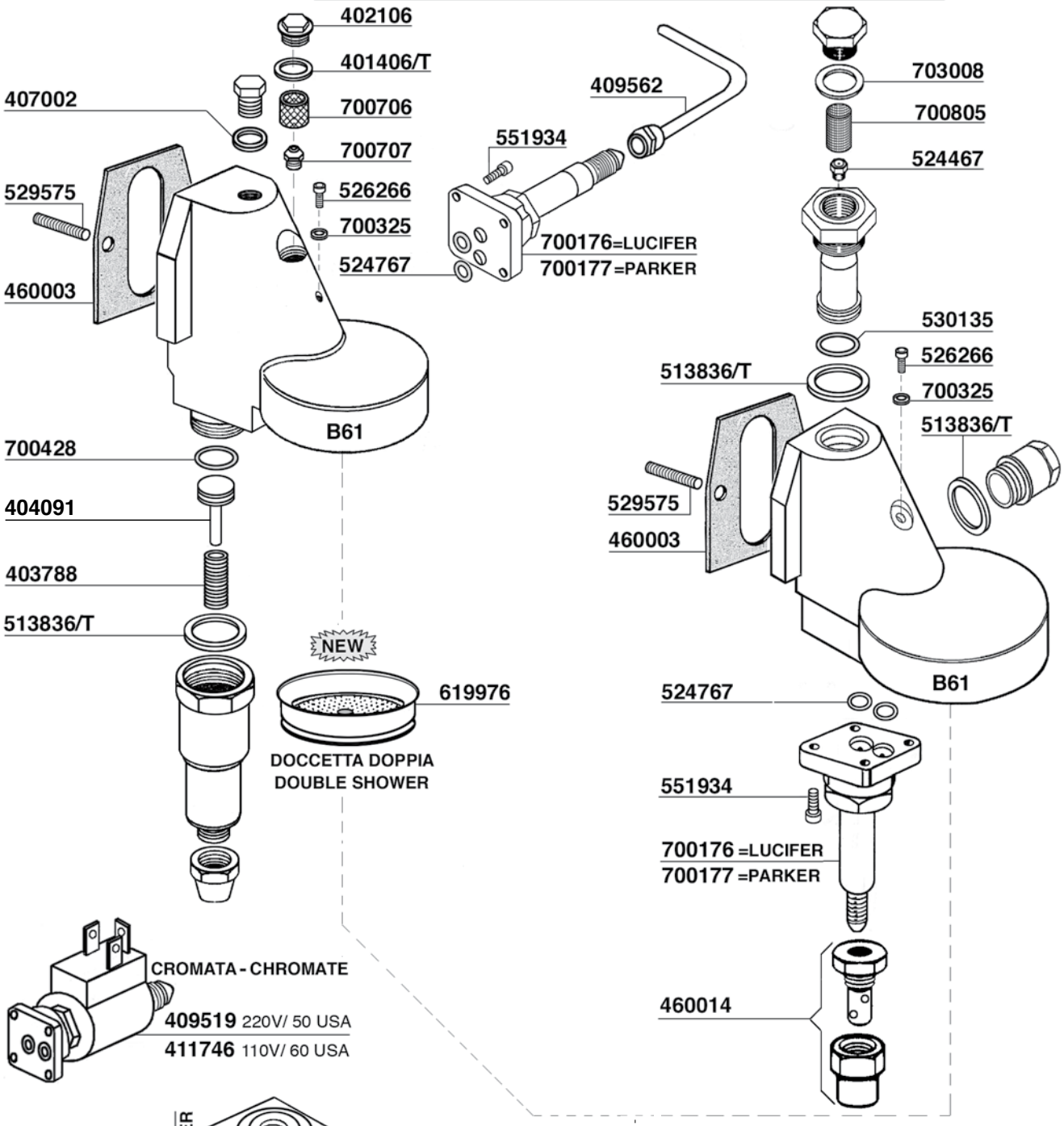

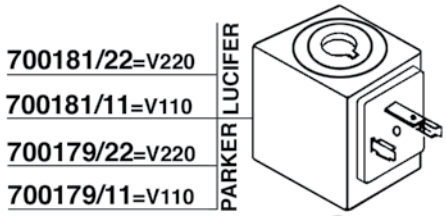

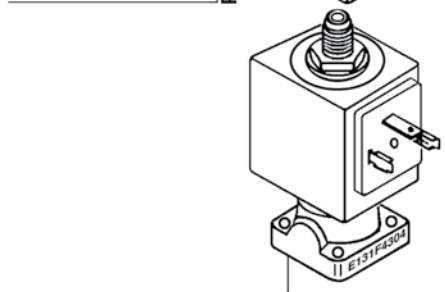

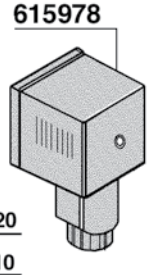

700301/22=V220	700152/22=V220
700301/11=V110	700152/11=V110
LUCIFER	PARKER

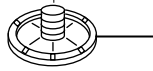

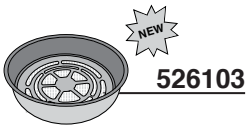

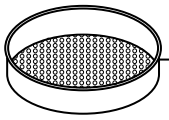

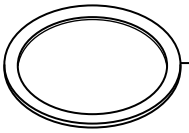

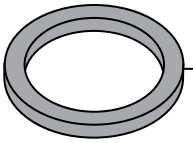

700883 =mm.8
700883/V=VITON
700883/5=mm.8,5
700883/80=mm.8,5 80 SHORE
404367=mm.8 ORIGINAL

BRASILIA

GRUPPO LEVA

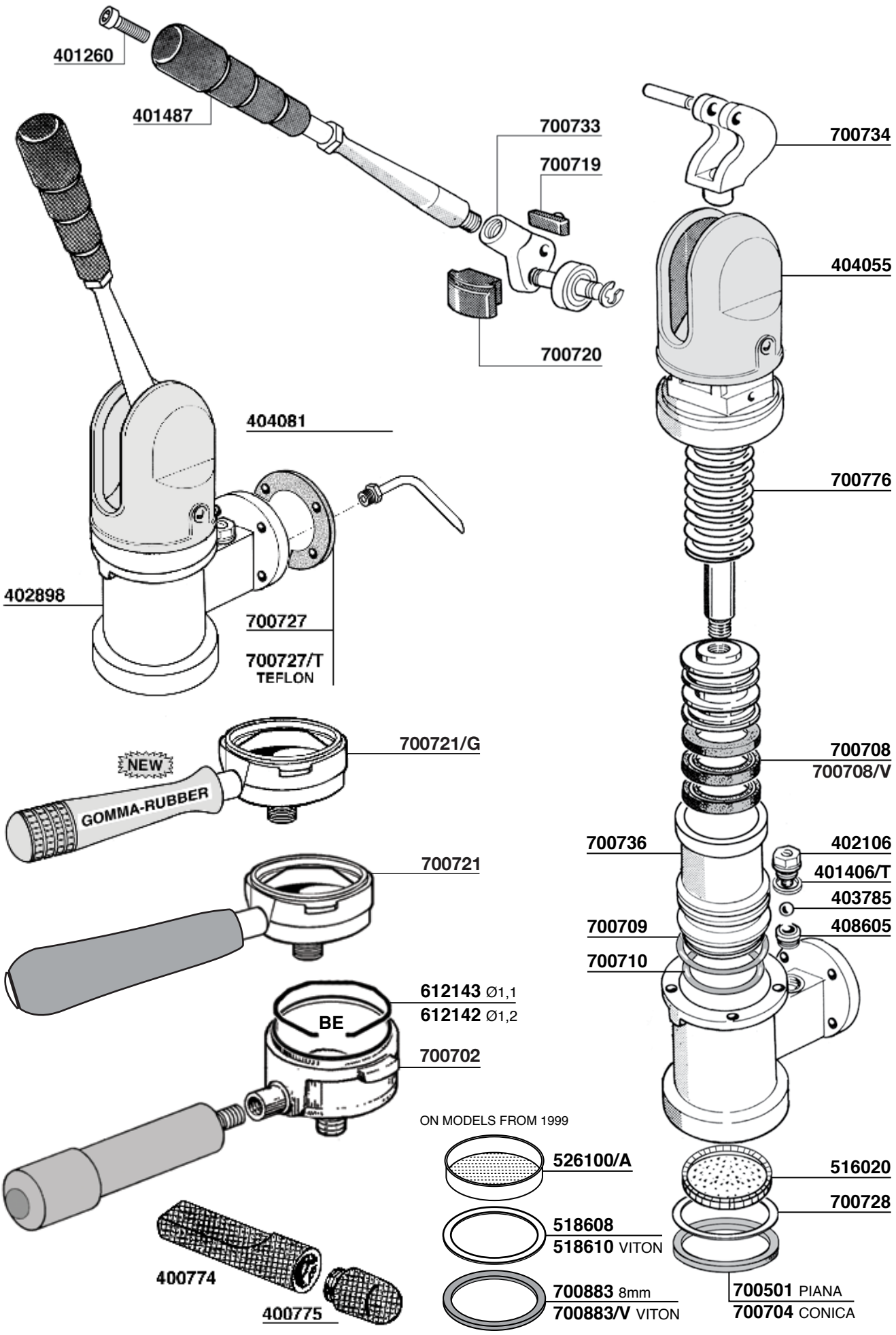

BRASILIA

514418 6gr
521830 7gr
521832 8gr
521833 7gr
MICROFORI
MICROHOLES

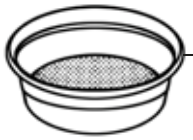

521994 14gr
514419 14gr ridgeless
516575 12gr
526208 18gr
700757 21gr
526758 24gr
521996 14gr
MICROFORI
MICROHOLES

521902

PER CIALDA - FOR POD

409169 = 1 CAFFE' h 16mm
407108 = 1 CAFFE' h 17mm
407109 = 2 CAFFE' h 22mm

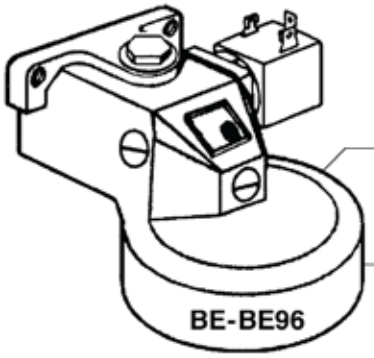

402453=BE V220
RACC.3/8"
FITTING 3/8"

409327=BE 96 V220
RACC.1/2"
FITTING 1/2"

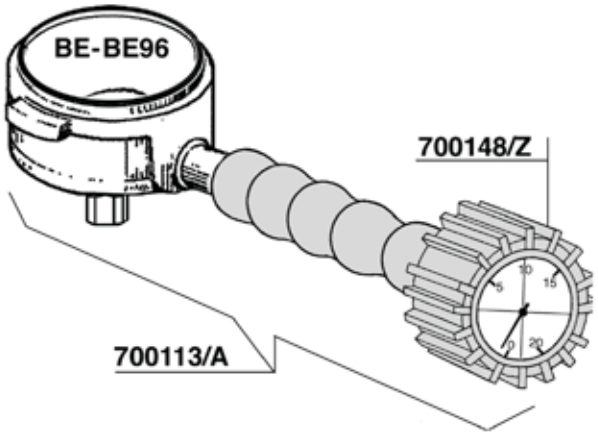

700148/Z

700113/A

PER GRUPPO B61

612143=Ø1,1
612142=Ø1,2

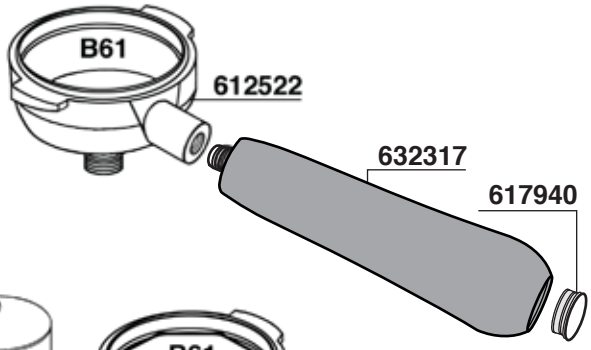

612522

632317

617940

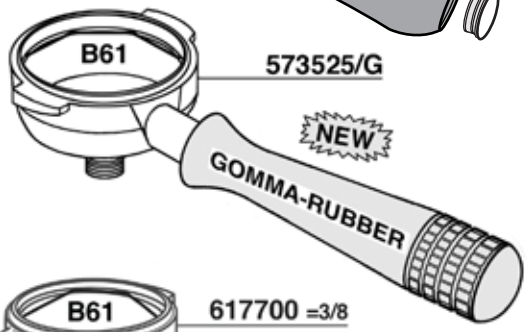

573525/G

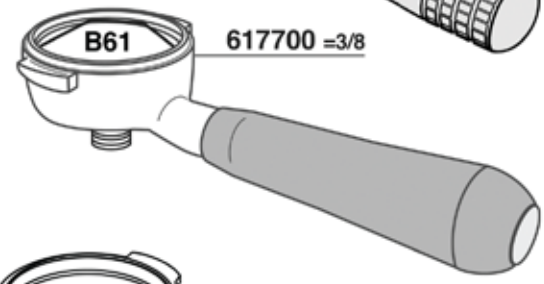

617700 =3/8

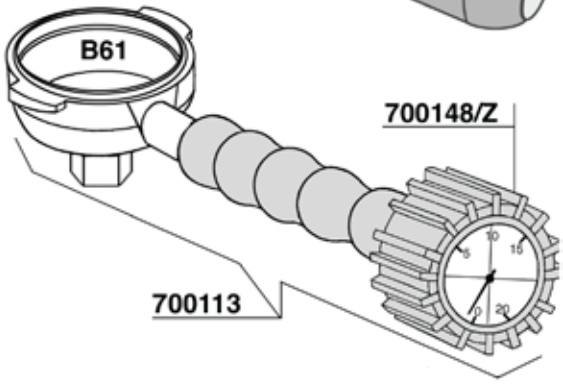

700148/Z

700113

ALUMINIUM

620438

513744

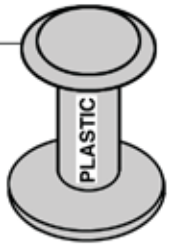

618522

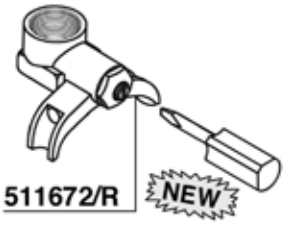

511672/R

502003

700024

511672

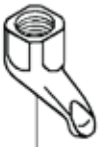

700024/C
COVERED

BRASILIA

RUBINETTI BAR-AMERICA

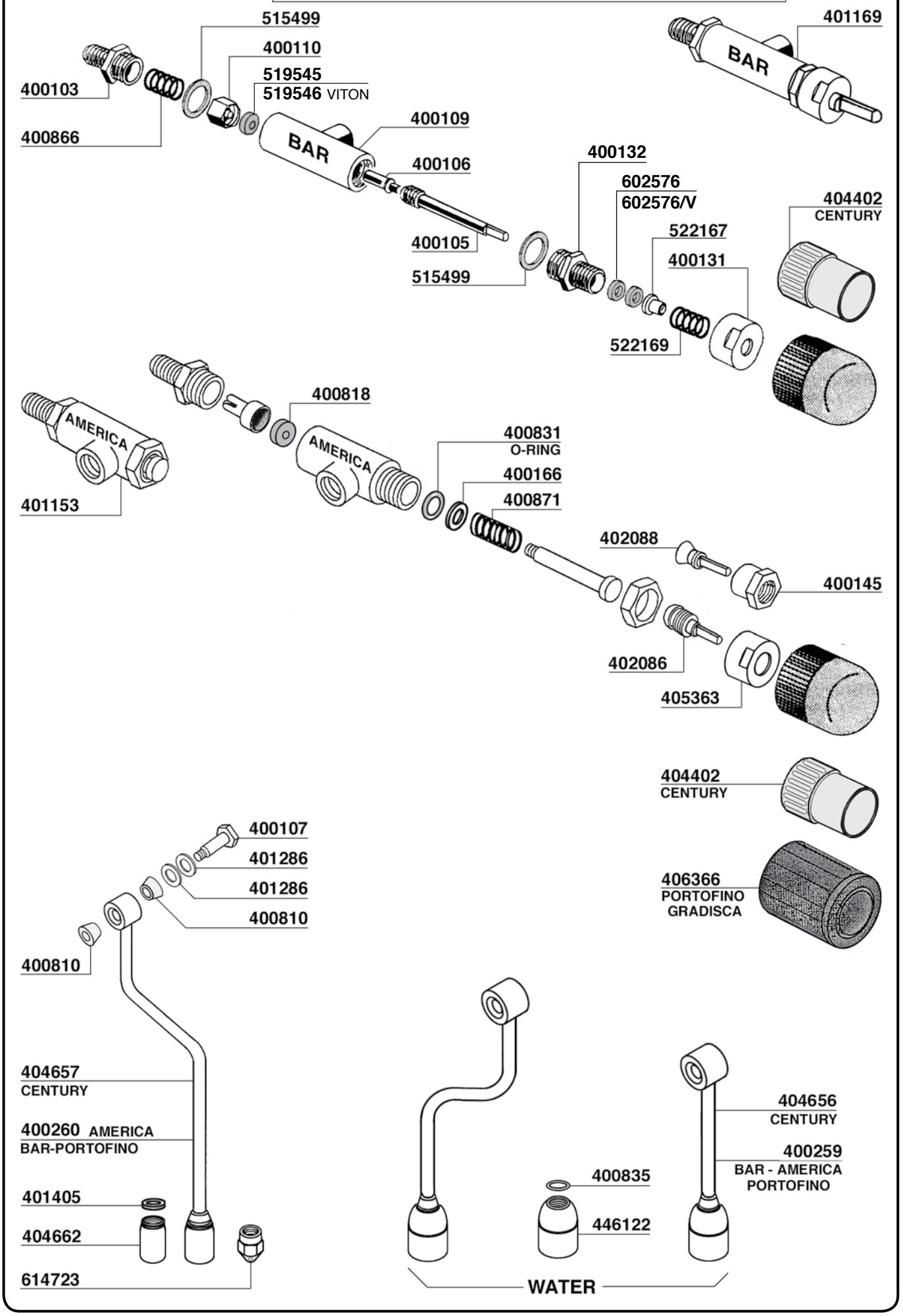

RUBINETTO CERAMICA

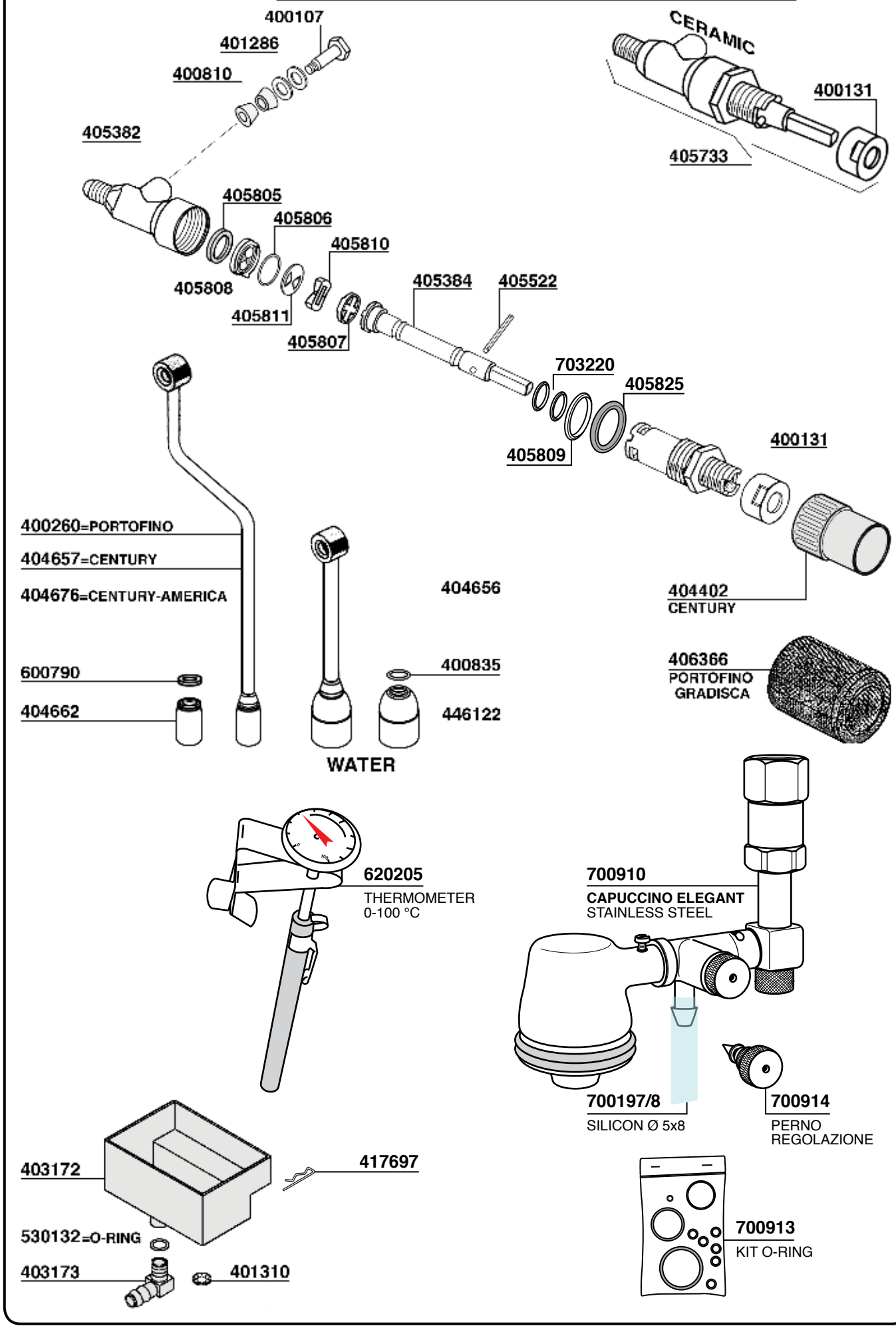

BRASILIA

RUBINETTI

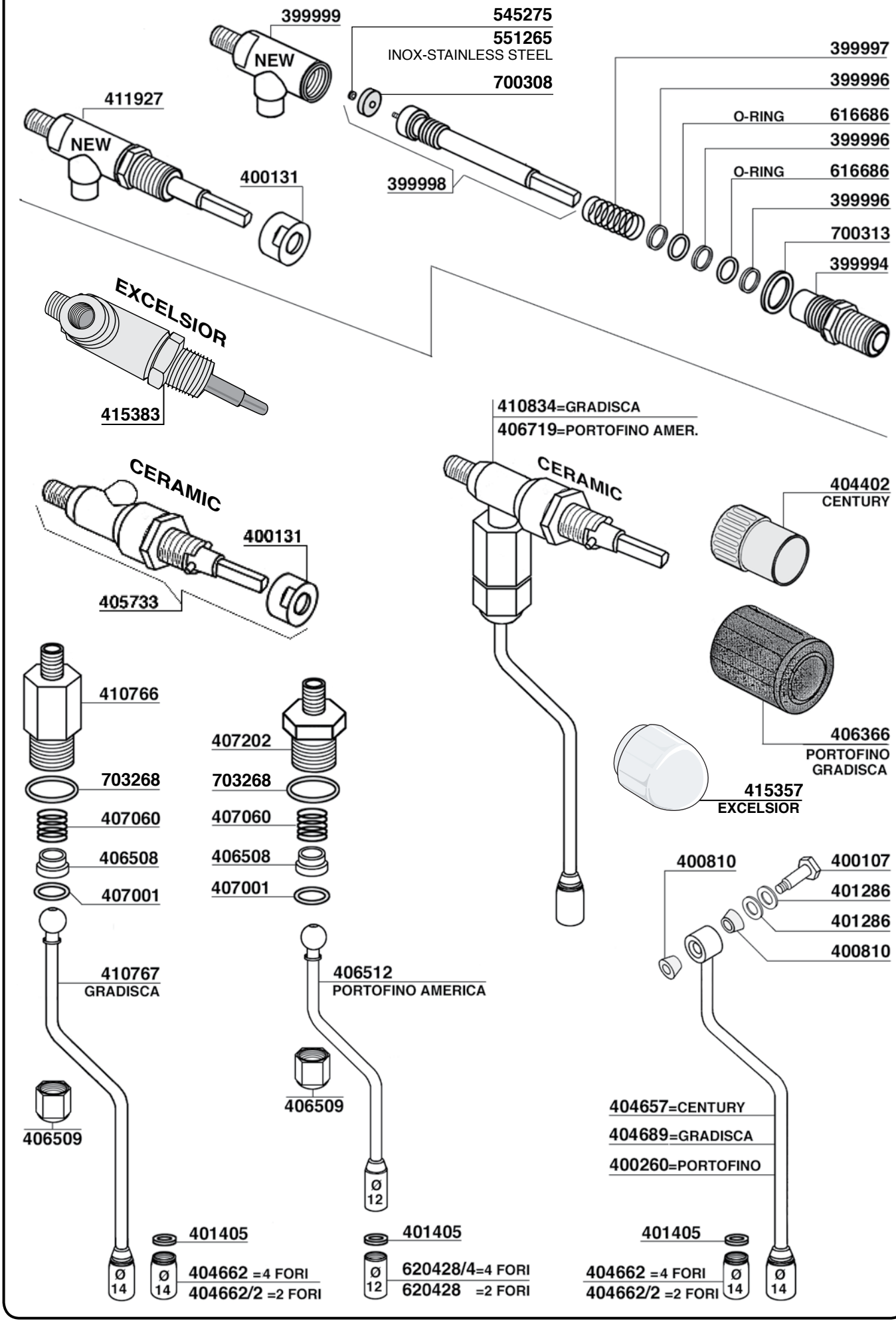

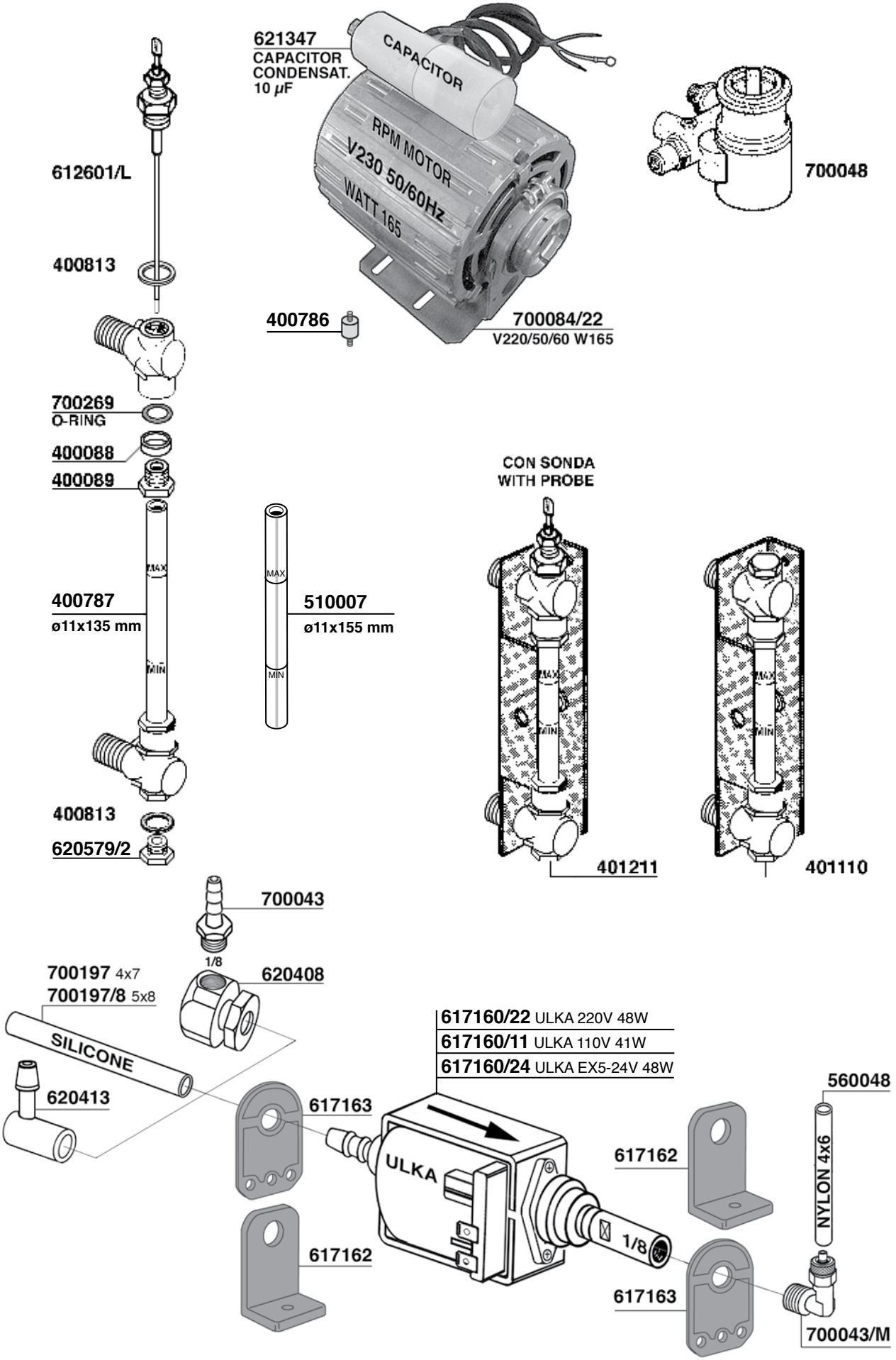
621347
CAPACITOR
CONDENSAT.
10 μF
CAPACITOR
RPM MOTOR
V230 50/60Hz
WATT 165
700048
612601/L
400813
400786
700084/22
V220/50/60 W165
700269
O-RING
400088
400089
CON SONDA
WITH PROBE
MAX
MIN
400787
ø11x135 mm
510007
ø11x155 mm
400813
620579/2
401211
401110
700043
1/8
620408
700197 4x7
700197/8 5x8
SILICONE
620413
617160/22 ULKA 220V 48W
617160/11 ULKA 110V 41W
617160/24 ULKA EX5-24V 48W
617163
ULKA
617162
1/8
560048
NYLON 4x6
617162
617163
700043/M

CLUB - LADY

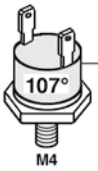

619293

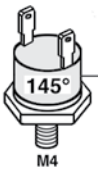

617991/G

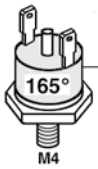

618964
RIARMO MANUALE
MANUAL RESETTING

MICROPOMPA VAPORE
STEAM MICROPUMP

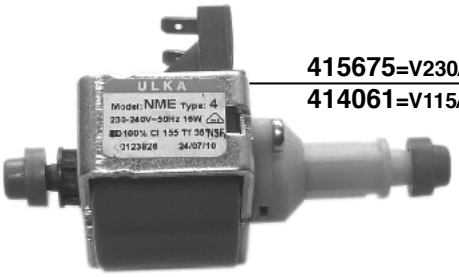

415675=V230/50
414061=V115/60

INDICATORE LIVELLO
WATERLINE INDICATOR

401878 =V230
401879 =V115

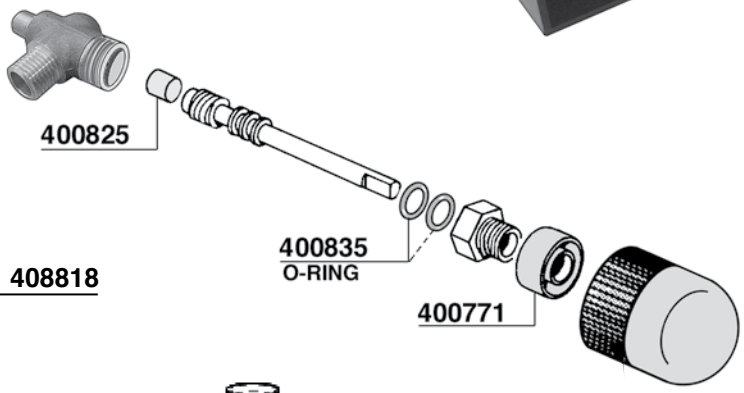

400825

400835
O-RING

400771

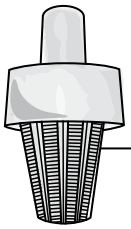

408818

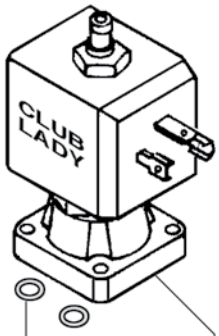

524767

401984 =V220
401984/11=V110

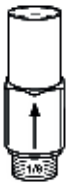

CLUB - LADY

400836
O-RING

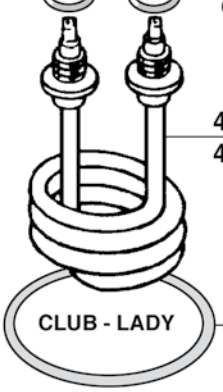

400625 =W1200 V230
400626 =W1200 V115

CLUB - LADY

530131
O-RING BOILER

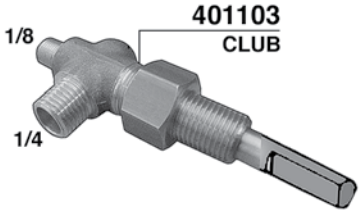

401103
CLUB

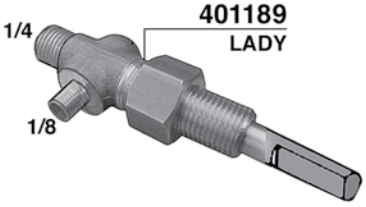

401189
LADY

409207

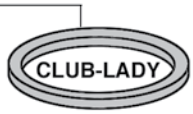

FILTER HOLDER GASKET
GUARNIZIONE PORTAFILTRO

CLUB

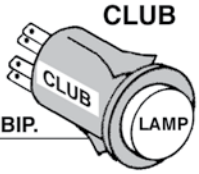

618010 V230 BIP.
INTERRUTTORE
SWITCH

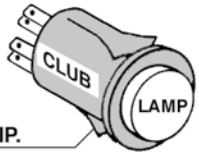

400660 V230 BIP.
PULSANTE
PUSH BUTTON

401547
TUBO POMPA-
CALDAIA CLUB-LADY
PIPE PUMP-
BOILER CLUB-LADY

400651

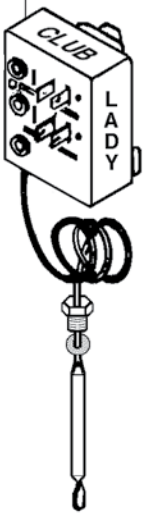

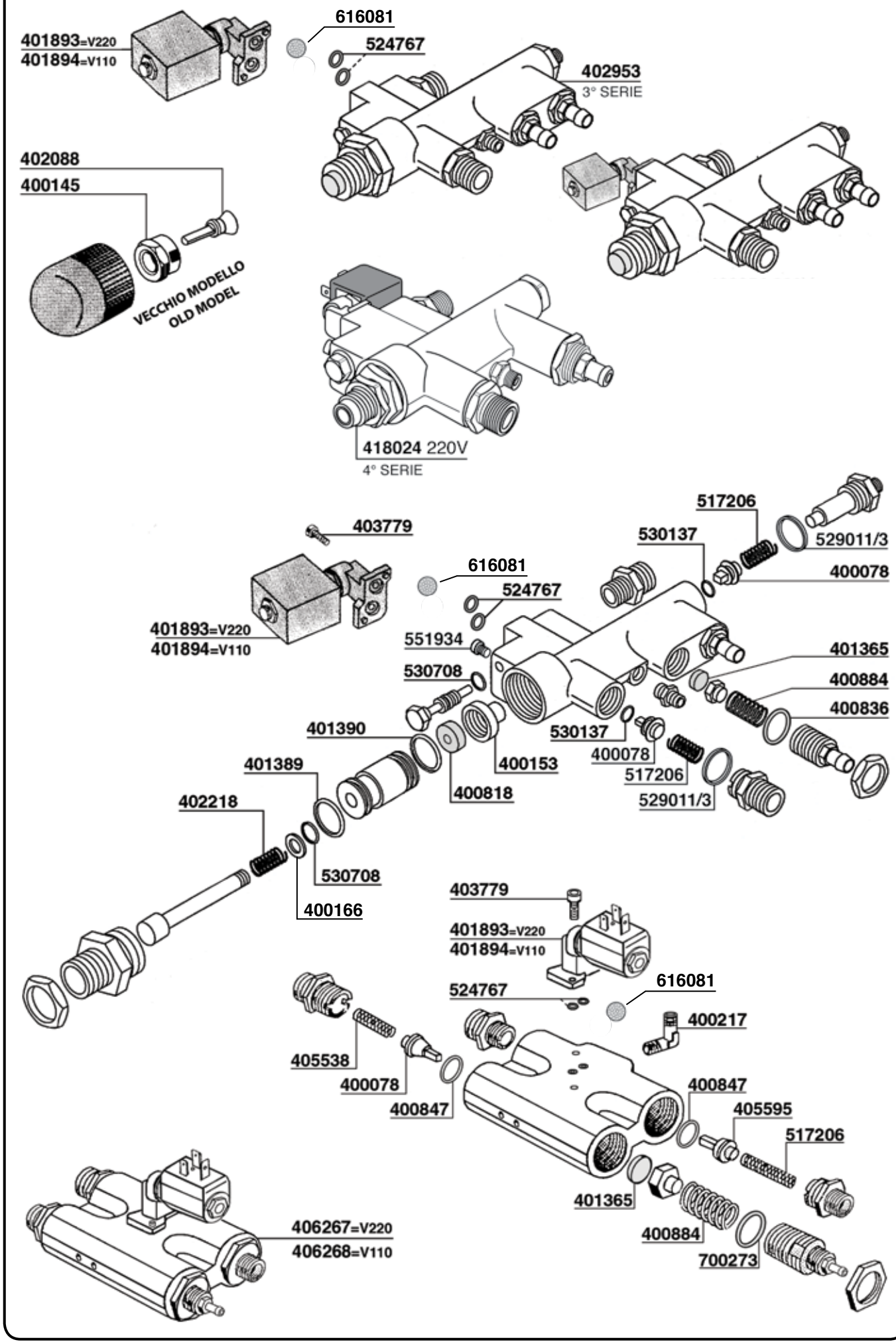
401893=V220
401894=V110
616081
524767
402953
3° SERIE
402088
400145
VECCHIO MODELLO
OLD MODEL
418024 220V
4° SERIE
403779
517206
529011/3
530137
400078
616081
524767
401893=V220
401894=V110
551934
401365
530708
400884
400836
401390
530137
400153
400078
401389
517206
400818
529011/3
402218
530708
400166
403779
401893=V220
401894=V110
616081
524767
400217
405538
400078
400847
400847
405595
517206
401365
400884
700273
406267=V220
406268=V110

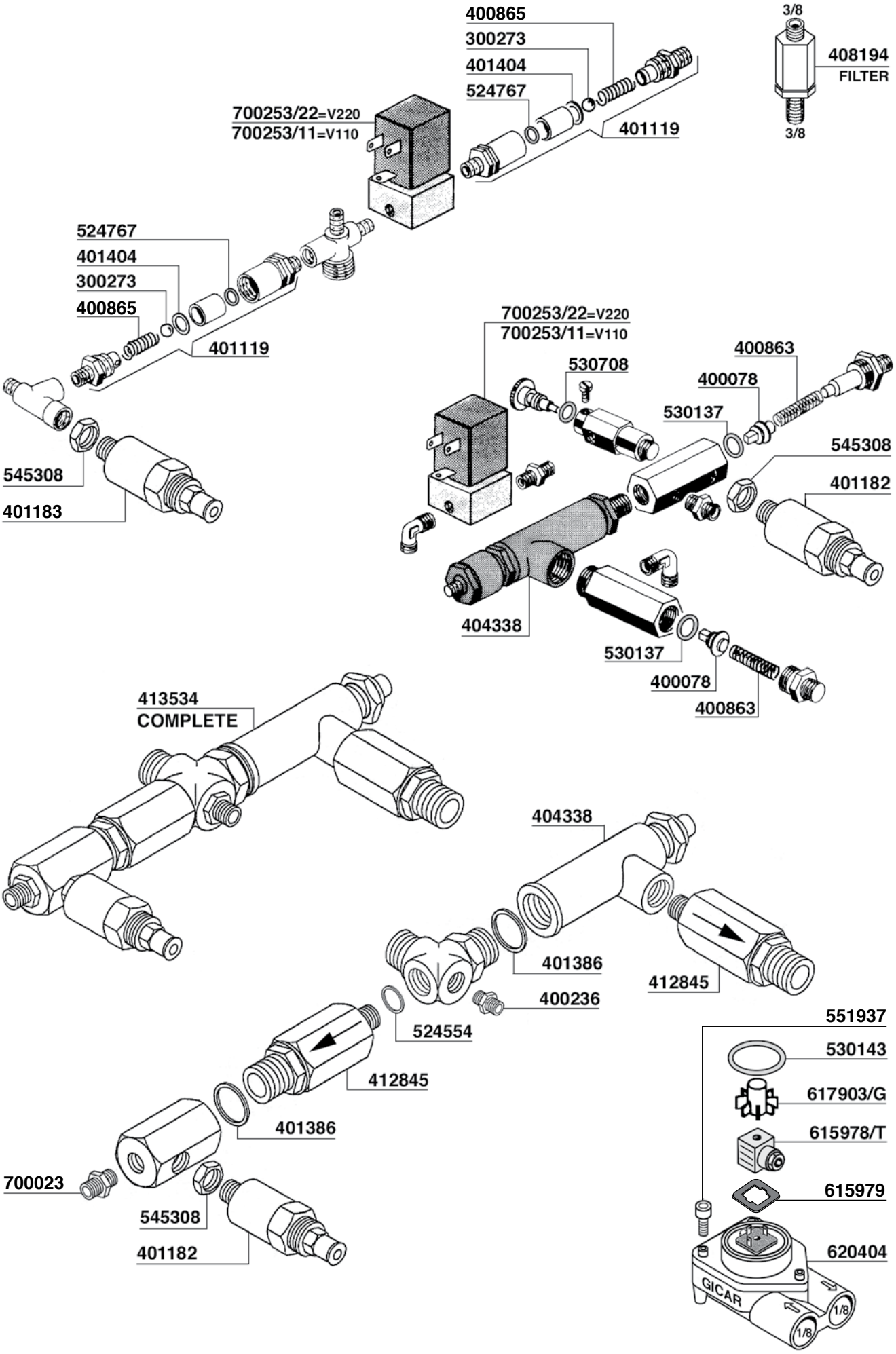
400865
300273
401404
524767
401119
700253/22=V220
700253/11=V110
3/8
408194
FILTER
3/8
524767
401404
300273
400865
401119
545308
401183
700253/22=V220
700253/11=V110
530708
400863
400078
530137
545308
401182
404338
530137
400078
400863
413534
COMPLETE
404338
401386
412845
400236
524554
412845
401386
700023
545308
401182
551937
530143
617903/G
615978/T
615979
620404
GICAR
1/8
1/8

BRASILIA

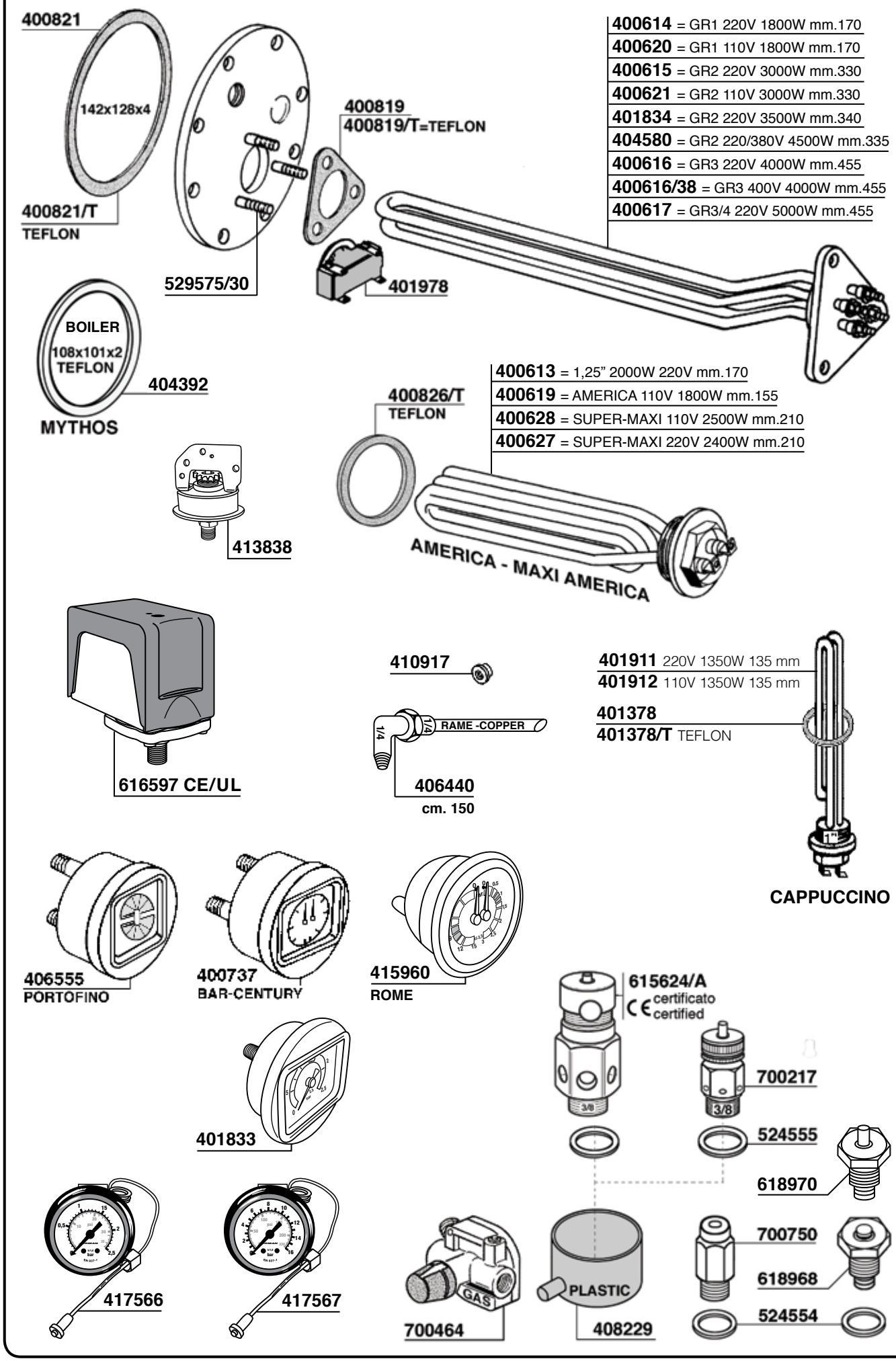
400821
142x128x4
400821/T
TEFLON
529575/30
400819
400819/T=TEFLON
401978
400614 = GR1 220V 1800W mm.170
400620 = GR1 110V 1800W mm.170
400615 = GR2 220V 3000W mm.330
400621 = GR2 110V 3000W mm.330
401834 = GR2 220V 3500W mm.340
404580 = GR2 220/380V 4500W mm.335
400616 = GR3 220V 4000W mm.455
400616/38 = GR3 400V 4000W mm.455
400617 = GR3/4 220V 5000W mm.455
BOILER
108x101x2
TEFLON
404392
MYTHOS
413838
400826/T
TEFLON
400613 = 1,25" 2000W 220V mm.170
400619 = AMERICA 110V 1800W mm.155
400628 = SUPER-MAXI 110V 2500W mm.210
400627 = SUPER-MAXI 220V 2400W mm.210
AMERICA - MAXI AMERICA
616597 CE/UL
410917
1/4
RAME -COPPER
406440
cm. 150
401911 220V 1350W 135 mm
401912 110V 1350W 135 mm
401378
401378/T TEFLON
1"
CAPPUCCINO
406555
PORTOFINO
400737
BAR-CENTURY
415960
ROME
401833
615624/A
certificato
certified
3/8
700217
524555
618970
417566
417567
GAS
700464
PLASTIC
408229
700750
618968
524554

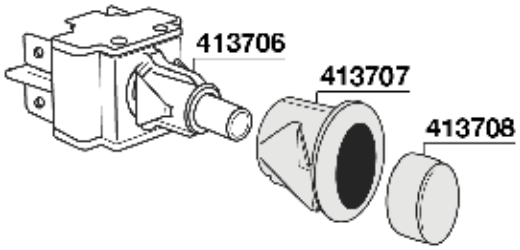
413706
413707
413708

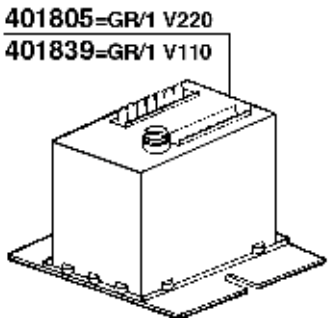
401805=GR/1 V220
401839=GR/1 V110

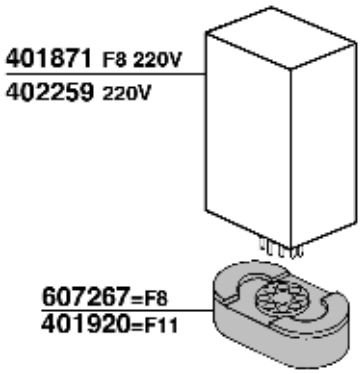
401871 F8 220V
402259 220V
607267=F8
401920=F11

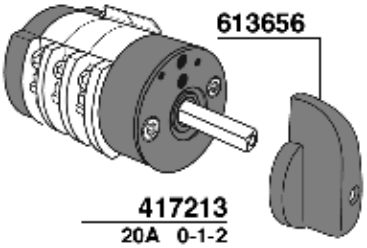
613656
417213
20A 0-1-2

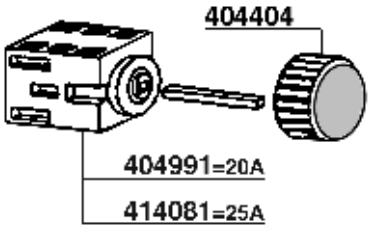
404404
404991=20A
414081=25A

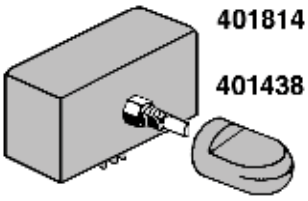
401814
401438

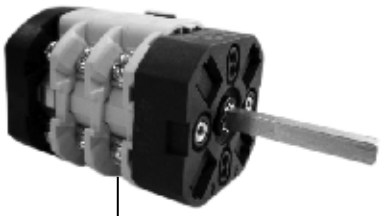
404992=20A

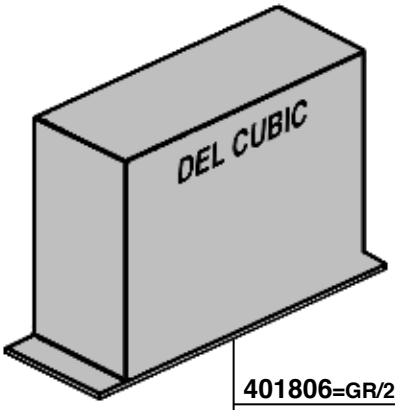
DEL CUBIC
401806=GR/2 V220
401807=GR/3 V220
401841=GR/3 V110

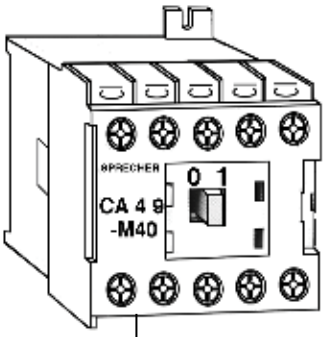
SPRECHER
0 1
CA 4 9
-M40
700653/22

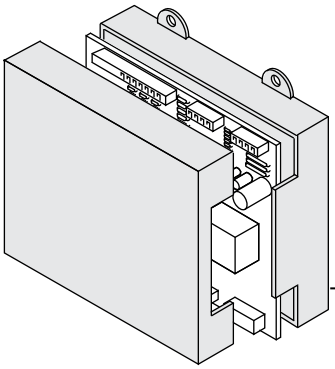
416035

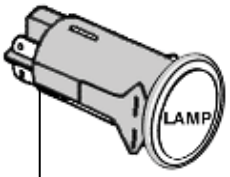
LAMP
401975=INTERRUTTORE
SWITCH BIP.

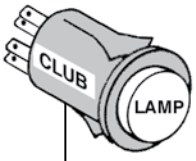
CLUB
LAMP
400660 V230 BIP.
PULSANTE
PUSH BOTTON

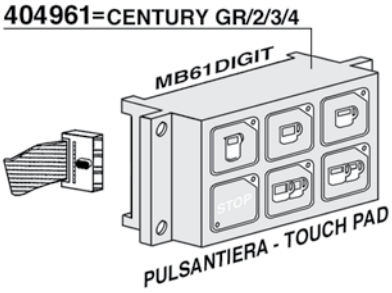
404961=CENTURY GR/2/3/4
MB61DIGIT
STOP
PULSANTIERA - TOUCH PAD

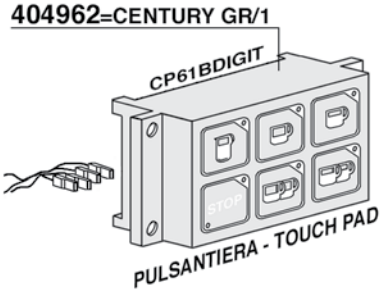
404962=CENTURY GR/1
CP61BDIGIT
STOP
PULSANTIERA - TOUCH PAD

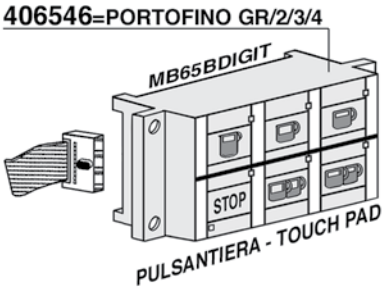
406546=PORTOFINO GR/2/3/4
MB65BDIGIT
STOP
PULSANTIERA - TOUCH PAD

BRASILIA

405475=CAPPUCC.CY XP61 V220
405483=CAPPUCC.CY XP61 V110

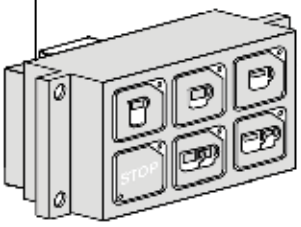

PULSANTIERA+CENTRALINA
TOUCH PAD+ELECTRONIC BOX

408494=PORTOFINO V220
CENTURY V220 96'
408711=PORTOFINO V110
CENTURY V110 96'

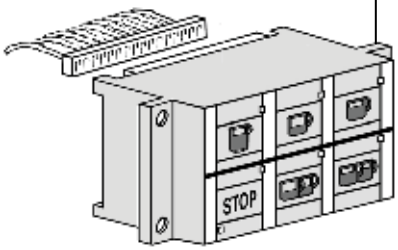

PULSANTIERA+CENTRALINA
TOUCH PAD+ELECTRONIC BOX

408498=GRADISCA-MYTHOS V220

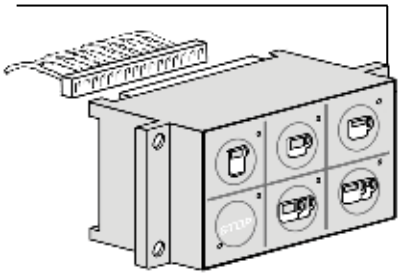

PULSANTIERA+CENTRALINA
TOUCH PAD+ELECTRONIC BOX

410453
7 PIN

409522=V220
409934=V110

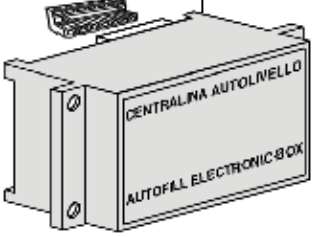

418748=OPUS
420250=SUBLIMA

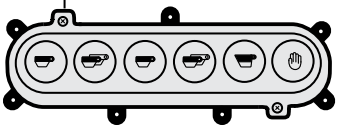

406556=XP65 GR/1 V220
406558=XP65 GR/1 V110

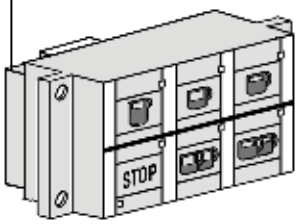

PULSANTIERA+CENTRALINA
TOUCH PAD+ELECTRONIC BOX

409948=GR/1 V220
409949=GR/2 V110

CENTRALINA FE-MBC
ELECTRONIC BOX FE-MBC

413123

RESTYLING MODEL

413426=105 - 205
CENTURY 02'
PORTOFINO

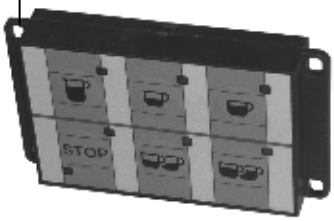

PULSANTIERA - TOUCH PAD

413420=GR2 V220
413421=GR3 V220
413422=GR4 V220
413423=GR2 V240
413425=GR3 V240

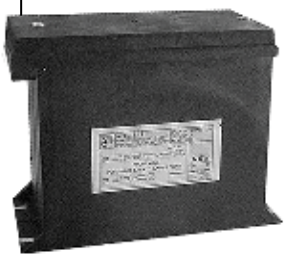

RESTYLING MODEL

409950=GR/2V220
409951=GR/2V110
409952=GR/3V220
409953=GR/4V220

A=POMPA AUTOL.
B=DOSATURA H2O
C=GRUPPO 1
D=GRUPPO 2
E=GRUPPO 3
F=GRUPPO 4

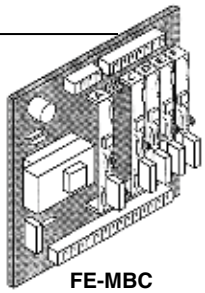

FE-MBC

410438
1°MODEL F/F

411738
2°MODEL M/M

411739
3°MODEL M/F

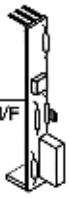

410135=CENTURY 98'

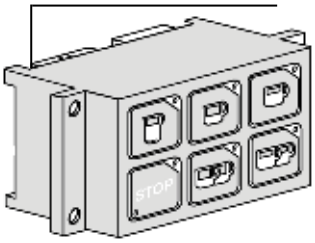

PULSANTIERA - TOUCH PAD

409954=PORTOFINO

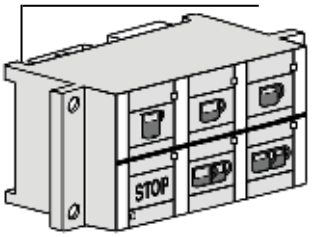

PULSANTIERA - TOUCH PAD

410136=GRADISCA-MYTHOS

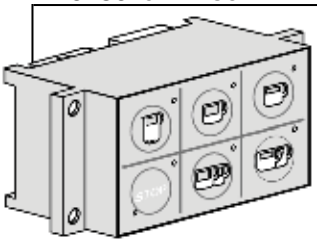

PULSANTIERA - TOUCH PAD

417578 ROMA
GICAR CODE 9.9.07.26G

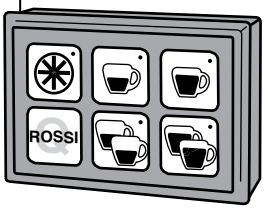

CARIMALI

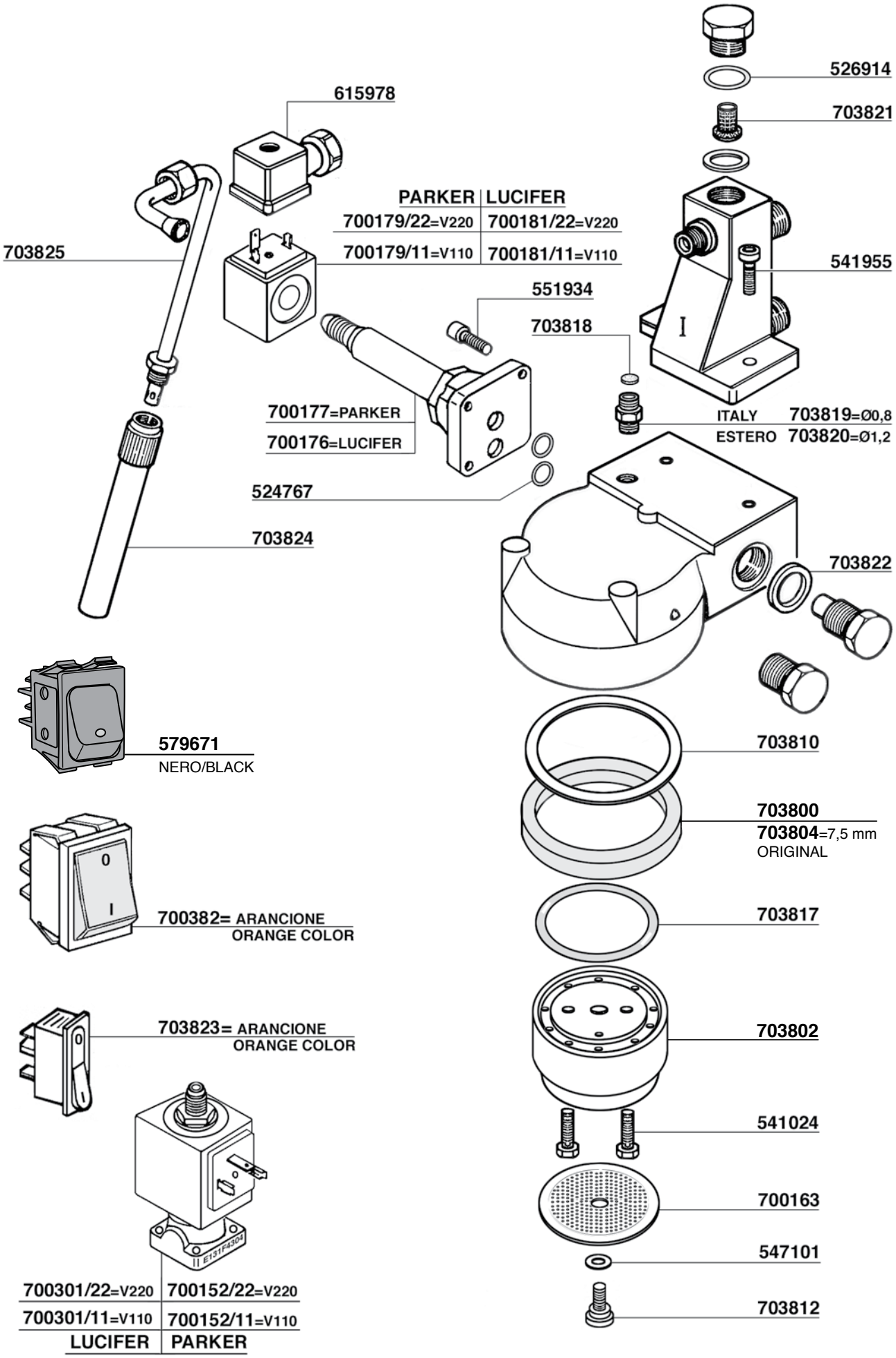
526914
703821
615978
PARKER | LUCIFER
700179/22=V220 | 700181/22=V220
700179/11=V110 | 700181/11=V110
703825
541955
551934
703818
700177=PARKER
700176=LUCIFER
ITALY 703819=Ø0,8
ESTERO 703820=Ø1,2
524767
703824
703822
579671
NERO/BLACK
703810
703800
703804=7,5 mm
ORIGINAL
700382= ARANCIONE
ORANGE COLOR
703817
703823= ARANCIONE
ORANGE COLOR
703802
541024
700163
547101
703812
E131F4304
700301/22=V220 | 700152/22=V220
700301/11=V110 | 700152/11=V110
LUCIFER | PARKER

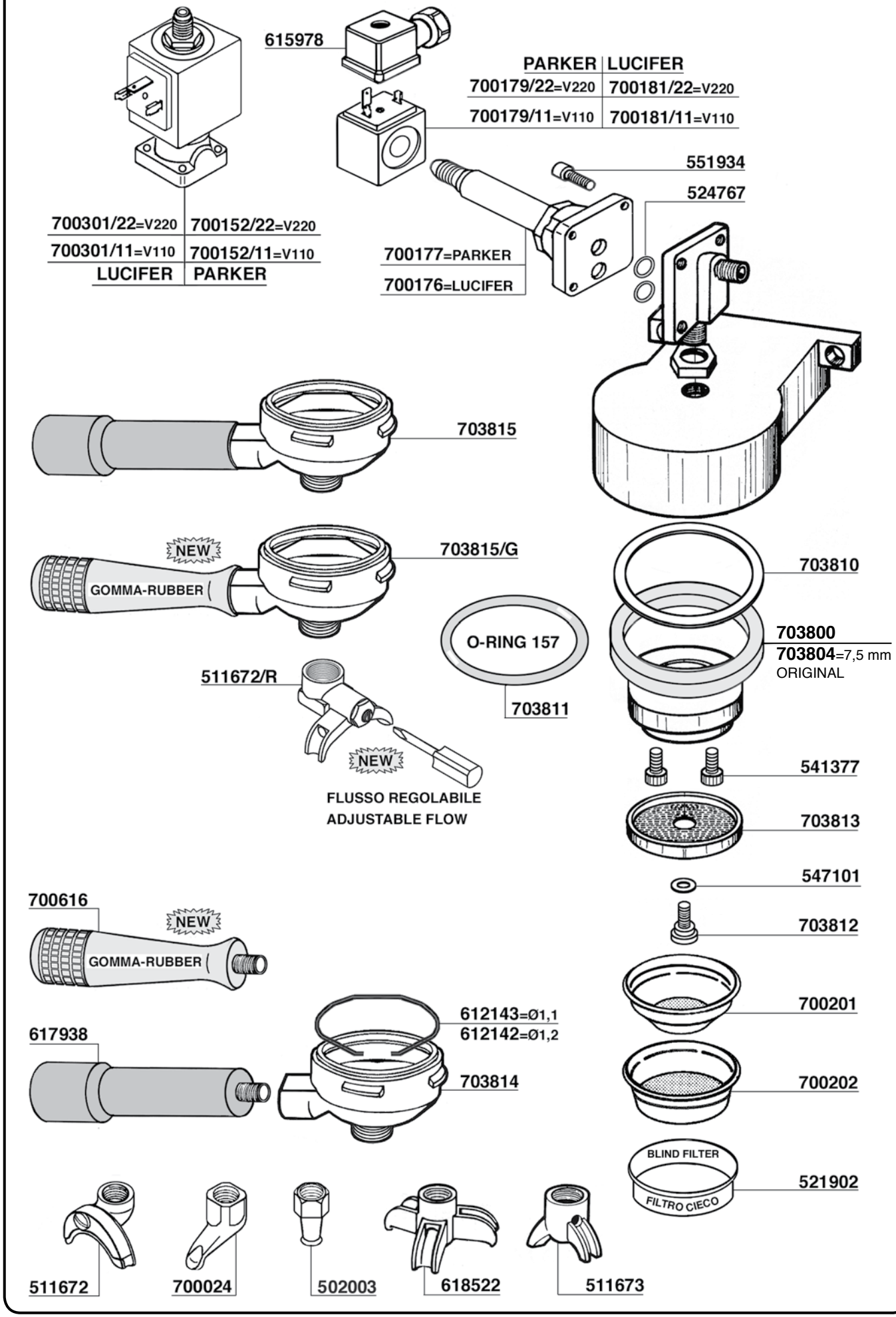
615978
PARKER | LUCIFER
700179/22=V220 | 700181/22=V220
700179/11=V110 | 700181/11=V110
551934
524767
700301/22=V220 | 700152/22=V220
700301/11=V110 | 700152/11=V110
LUCIFER | PARKER
700177=PARKER
700176=LUCIFER
703815
NEW
GOMMA-RUBBER
703815/G
703810
O-RING 157
703800
703804=7,5 mm
ORIGINAL
511672/R
703811
NEW
FLUSSO REGOLABILE
ADJUSTABLE FLOW
541377
703813
547101
700616
NEW
GOMMA-RUBBER
703812
700201
612143=Ø1,1
612142=Ø1,2
617938
703814
700202
BLIND FILTER
FILTRO CIECO
521902
511672
700024
502003
618522
511673

CARIMALI

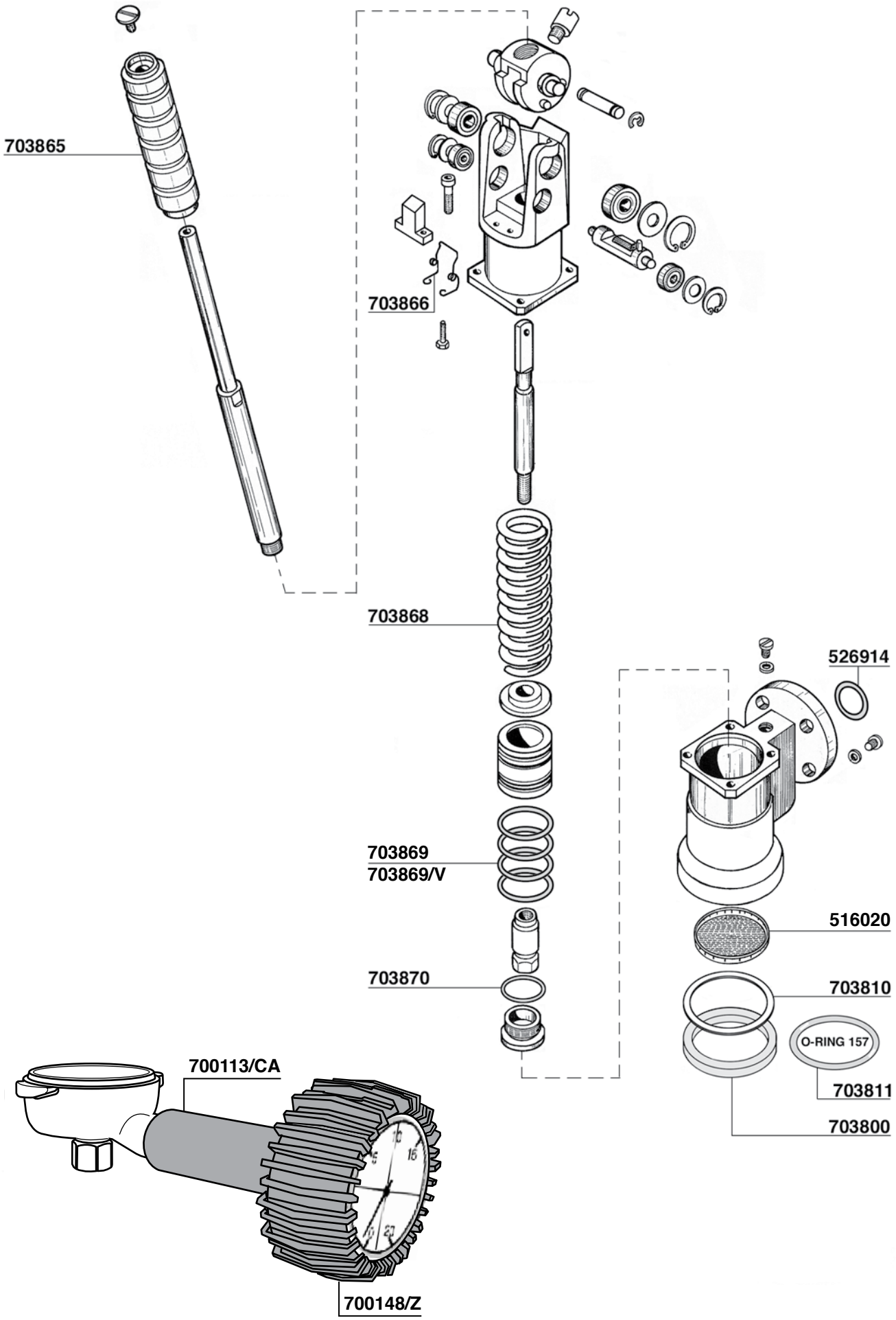
703865
703866
703868
526914
703869
703869/V
516020
703870
703810
O-RING 157
703811
703800
700113/CA
700148/Z

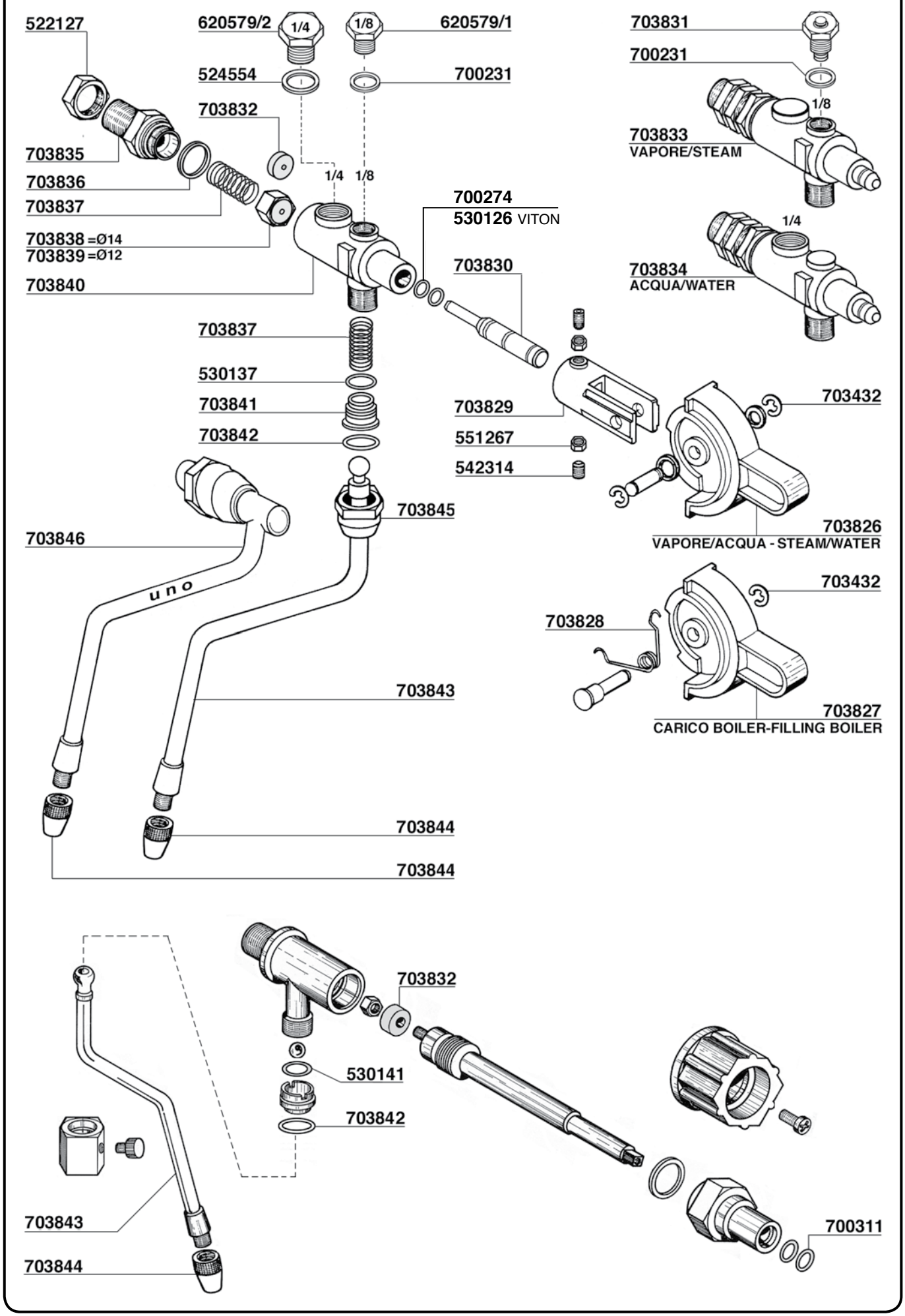
522127
620579/2
1/4
1/8
620579/1
703831
700231
524554
700231
703832
1/8
703833
VAPORE/STEAM
703835
703836
703837
1/4 1/8
700274
530126 VITON
703838 =Ø14
703839 =Ø12
703840
703830
1/4
703834
ACQUA/WATER
703837
530137
703841
703842
703829
551267
542314
703432
703845
703826
VAPORE/ACQUA - STEAM/WATER
703846
uno
703432
703828
703843
703827
CARICO BOILER-FILLING BOILER
703844
703844
703832
530141
703842
703843
703844
700311

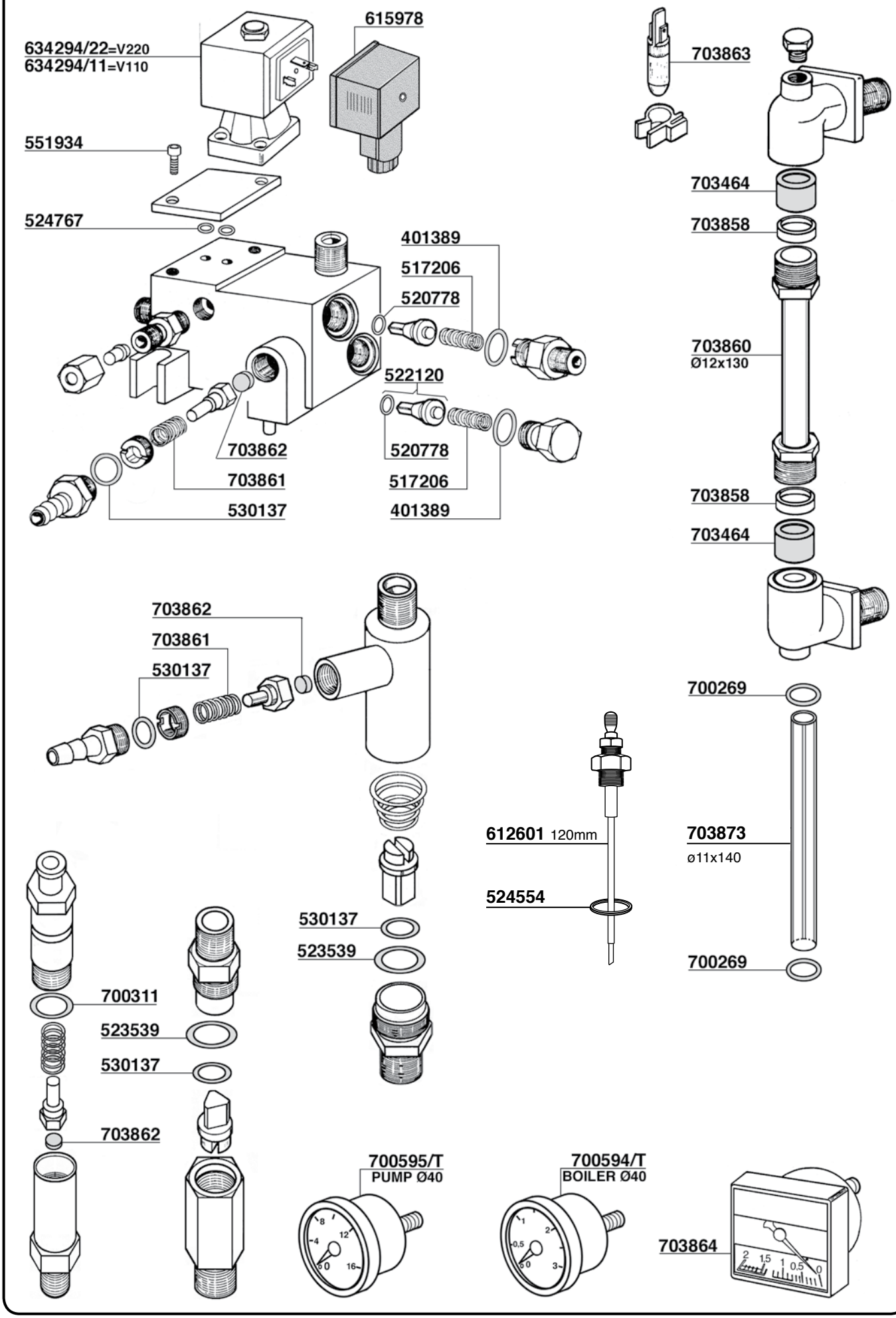
634294/22=V220
634294/11=V110
615978
551934
524767
401389
517206
520778
522120
703862
703861
530137
520778
517206
401389
703863
703464
703858
703860
Ø12x130
703858
703464
703862
703861
530137
700269
612601 120mm
524554
703873
ø11x140
700269
530137
523539
700311
523539
530137
703862
700595/T
PUMP Ø40
700594/T
BOILER Ø40
703864

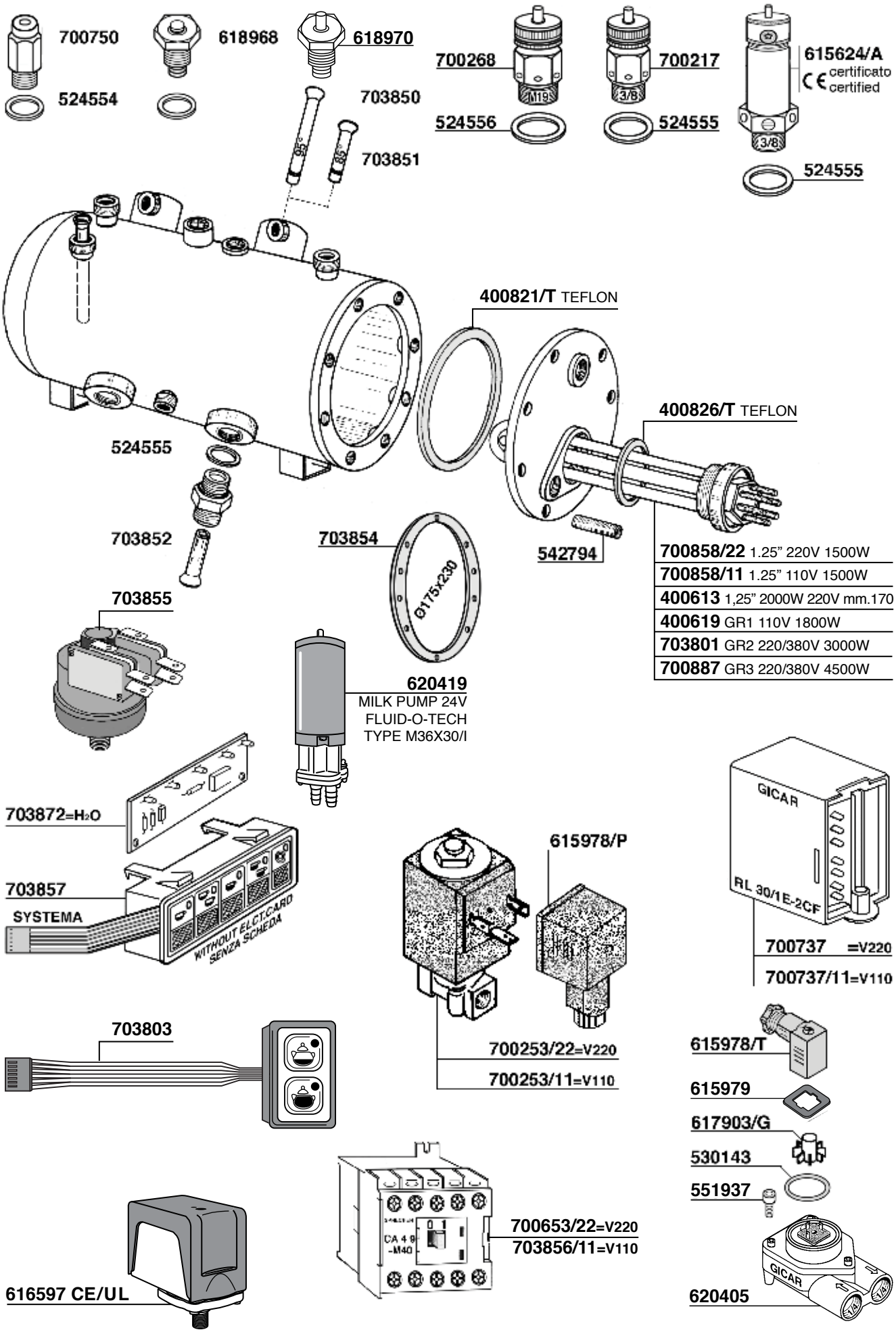
700750
618968
618970
524554
703850
703851
700268
700217
615624/A
certificato
certified
524556
524555
524555
400821/T TEFLON
400826/T TEFLON
524555
703852
703854
Ø175x230
542794
700858/22 1.25" 220V 1500W
700858/11 1.25" 110V 1500W
400613 1,25" 2000W 220V mm.170
400619 GR1 110V 1800W
703801 GR2 220/380V 3000W
700887 GR3 220/380V 4500W
703855
620419
MILK PUMP 24V
FLUID-O-TECH
TYPE M36X30/I
703872=H2O
703857
SYSTEMA
WITHOUT ELCT.CARD
SENZA SCHEDA
615978/P
GICAR
RL 30/1E-2CF
700737 =V220
700737/11=V110
703803
700253/22=V220
700253/11=V110
615978/T
615979
617903/G
530143
551937
700653/22=V220
703856/11=V110
616597 CE/UL
620405
GICAR

NUOVA RICAMBI PARTI COMPATIBILI CASADIO Tav. 01

DIECI A/S - DODICI A/S

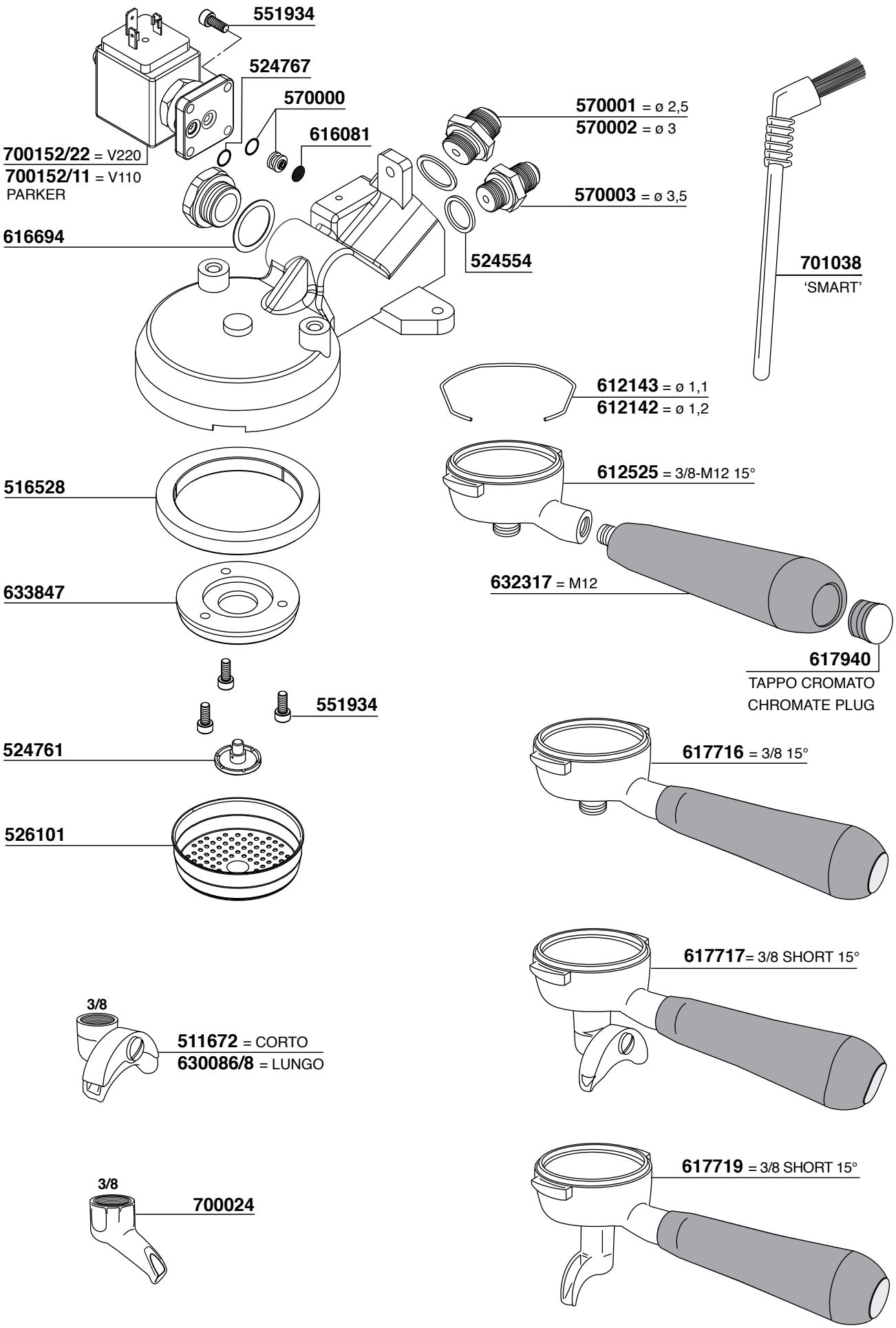

VENTI

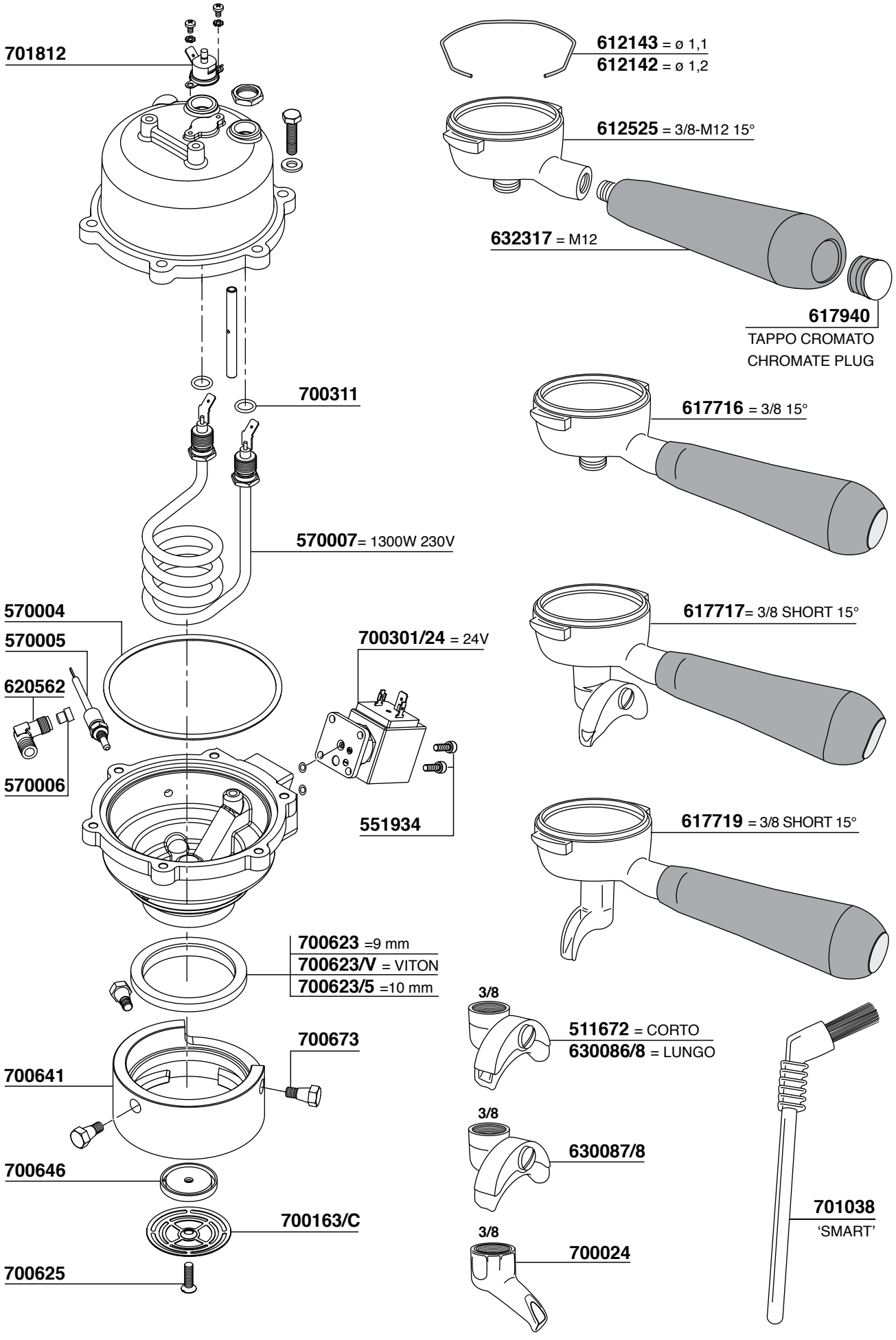
701812
612143 = ø 1,1
612142 = ø 1,2
612525 = 3/8-M12 15°
632317 = M12
617940
TAPPO CROMATO
CHROMATE PLUG
700311
617716 = 3/8 15°
570007= 1300W 230V
570004
570005
620562
570006
700301/24 = 24V
551934
617717= 3/8 SHORT 15°
617719 = 3/8 SHORT 15°
700623 =9 mm
700623/V = VITON
700623/5 =10 mm
700673
700641
700646
700163/C
700625
3/8
511672 = CORTO
630086/8 = LUNGO
3/8
630087/8
3/8
700024
701038
'SMART'

NUOVA RICAMBI PARTI COMPATIBILI CASADIO Tav. 03

DIECI A/S - DODICI A/S - VENTI

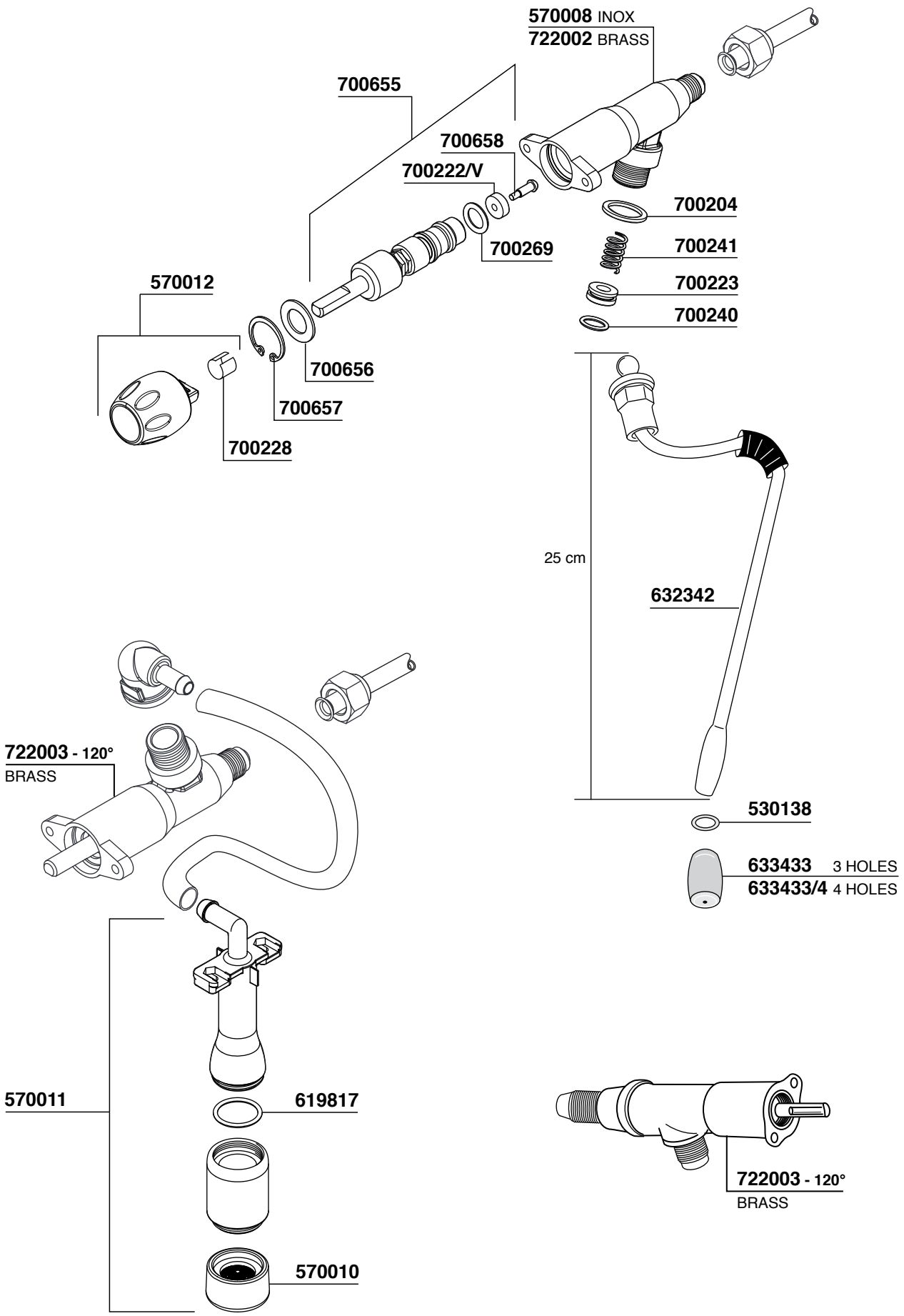

DIECI A/S - DODICI A/S

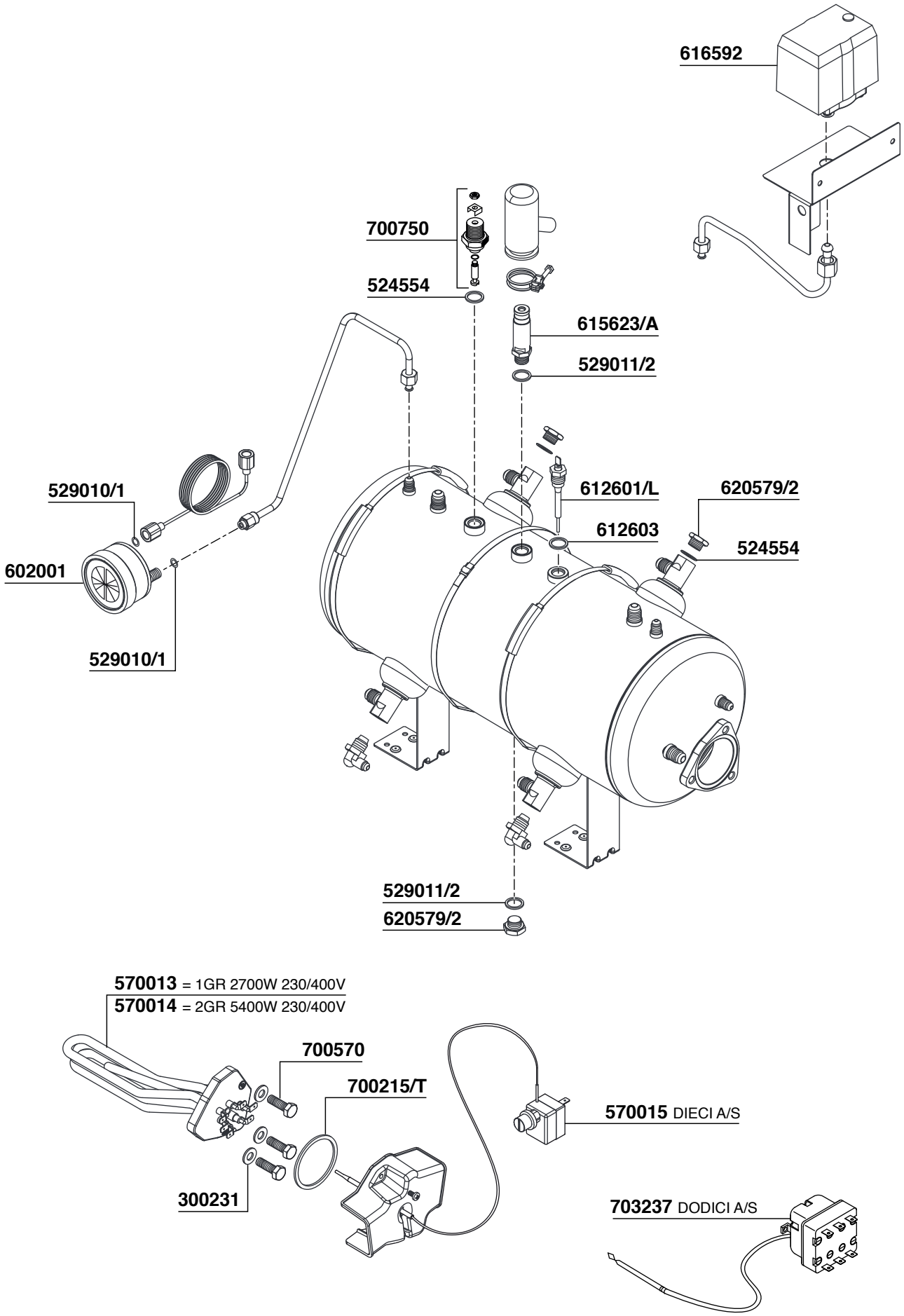

VENTI

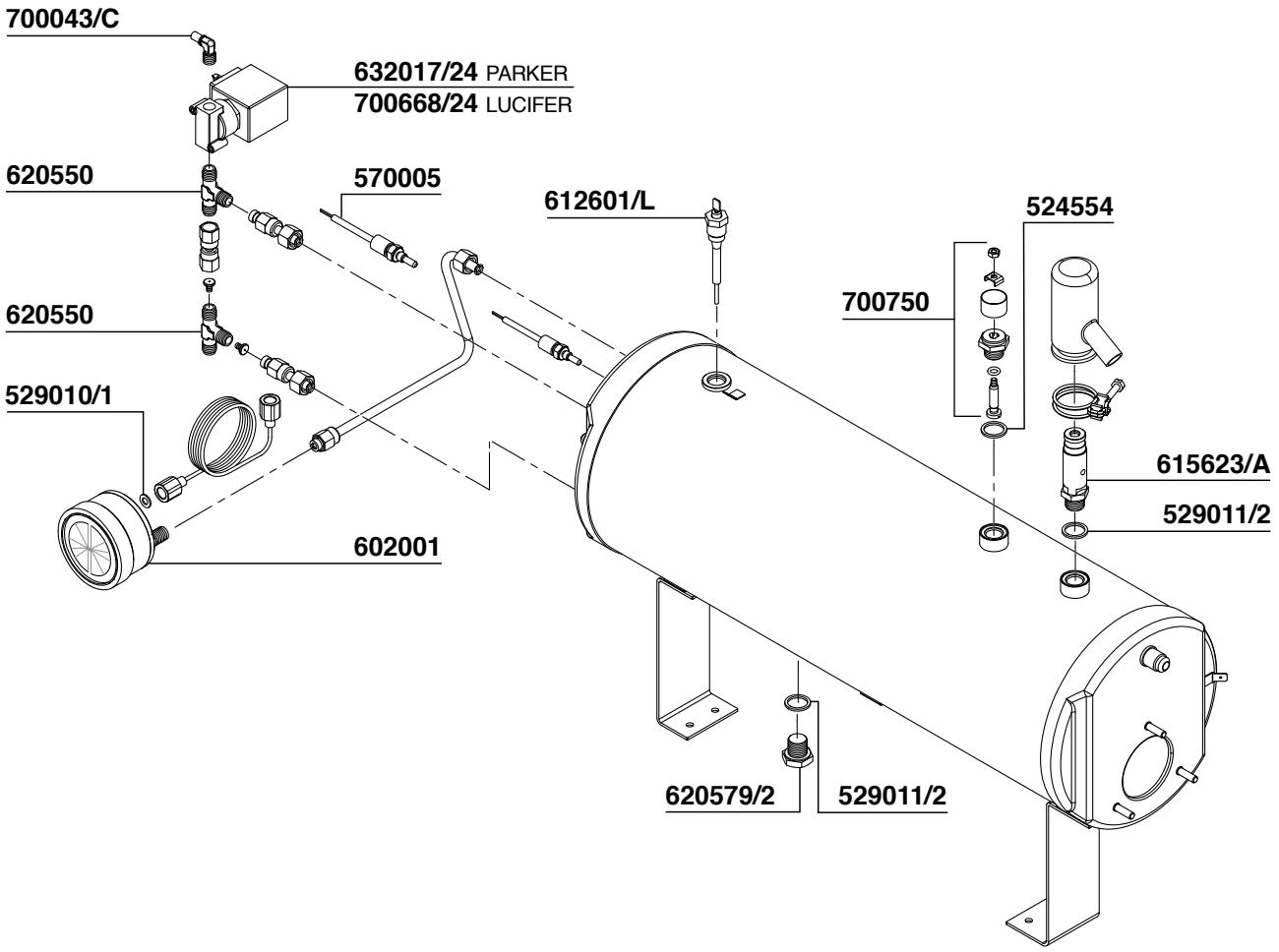
700043/C
632017/24 PARKER
700668/24 LUCIFER
620550
570005
612601/L
524554
700750
620550
529010/1
615623/A
529011/2
602001
620579/2
529011/2

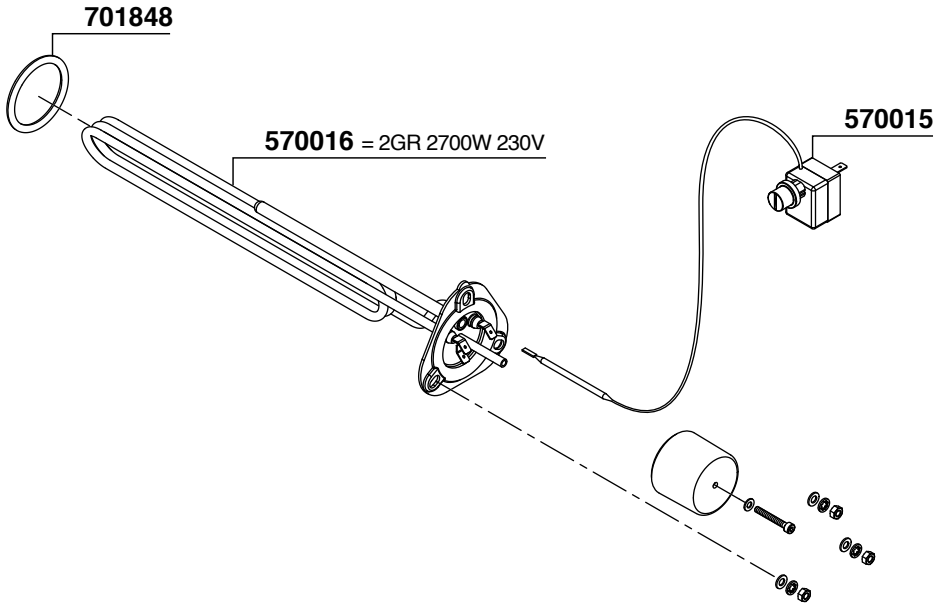
701848
570016 = 2GR 2700W 230V
570015

DIECI A/S - DIECI A/S - VENTI

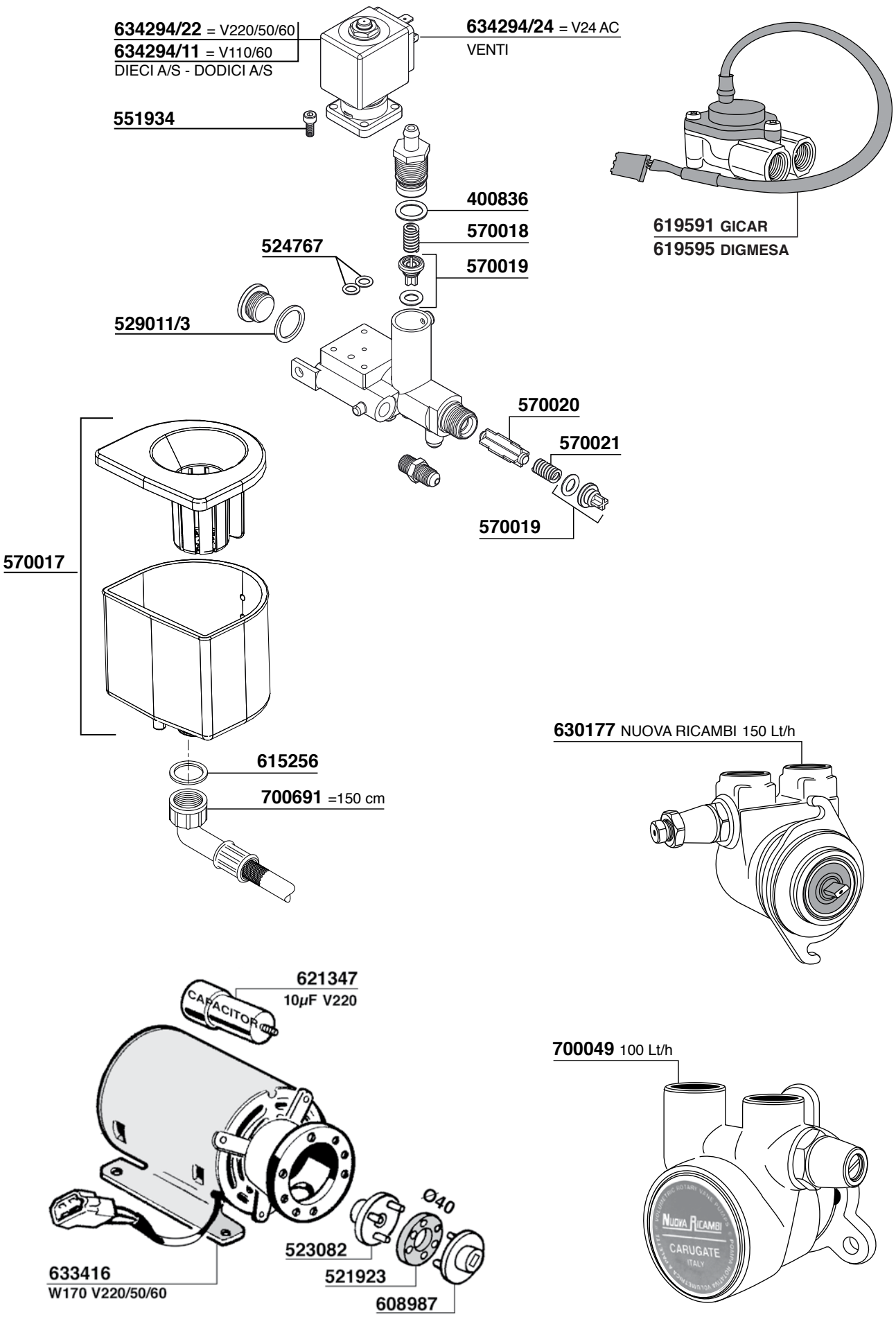

DIECI A/S - DIECI A/S - VENTI

570022

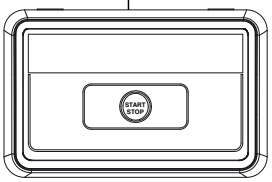

DIECI S

570023

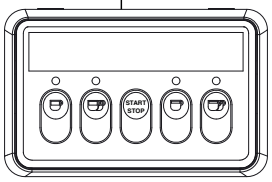

DIECI A

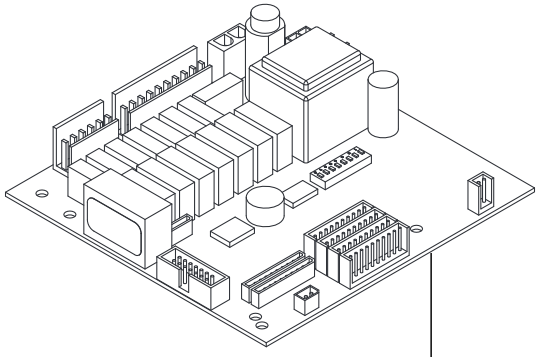

570024 DIECI A/S - DODICI A/S

570025

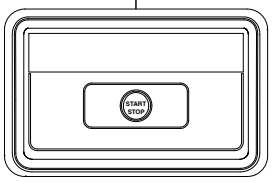

DODICI S

570026

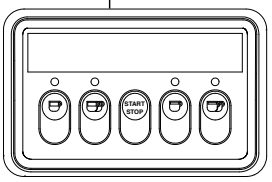

DODICI A

570027

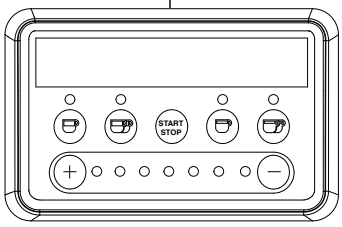

VENTI

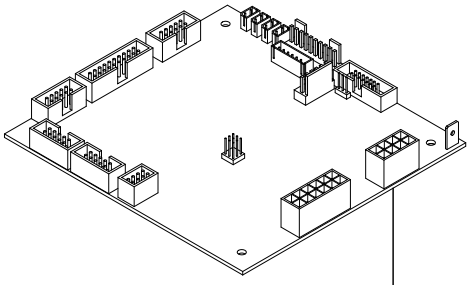

570028 VENTI

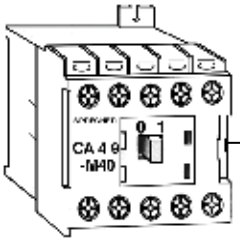

700653/22=V220
DIECI A/S - VENTI

700238
DIECI A/S

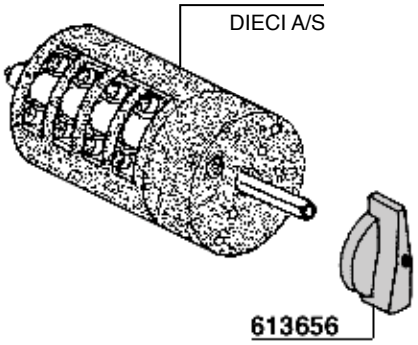

613656

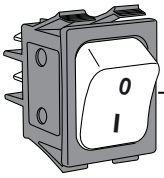

700429/V
DIECI A/S - VENTI

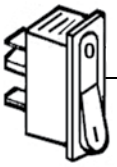

703823
DODICI A/S

NUOVA RICAMBI PARTI COMPATIBILI CIMBALI Tav. 01

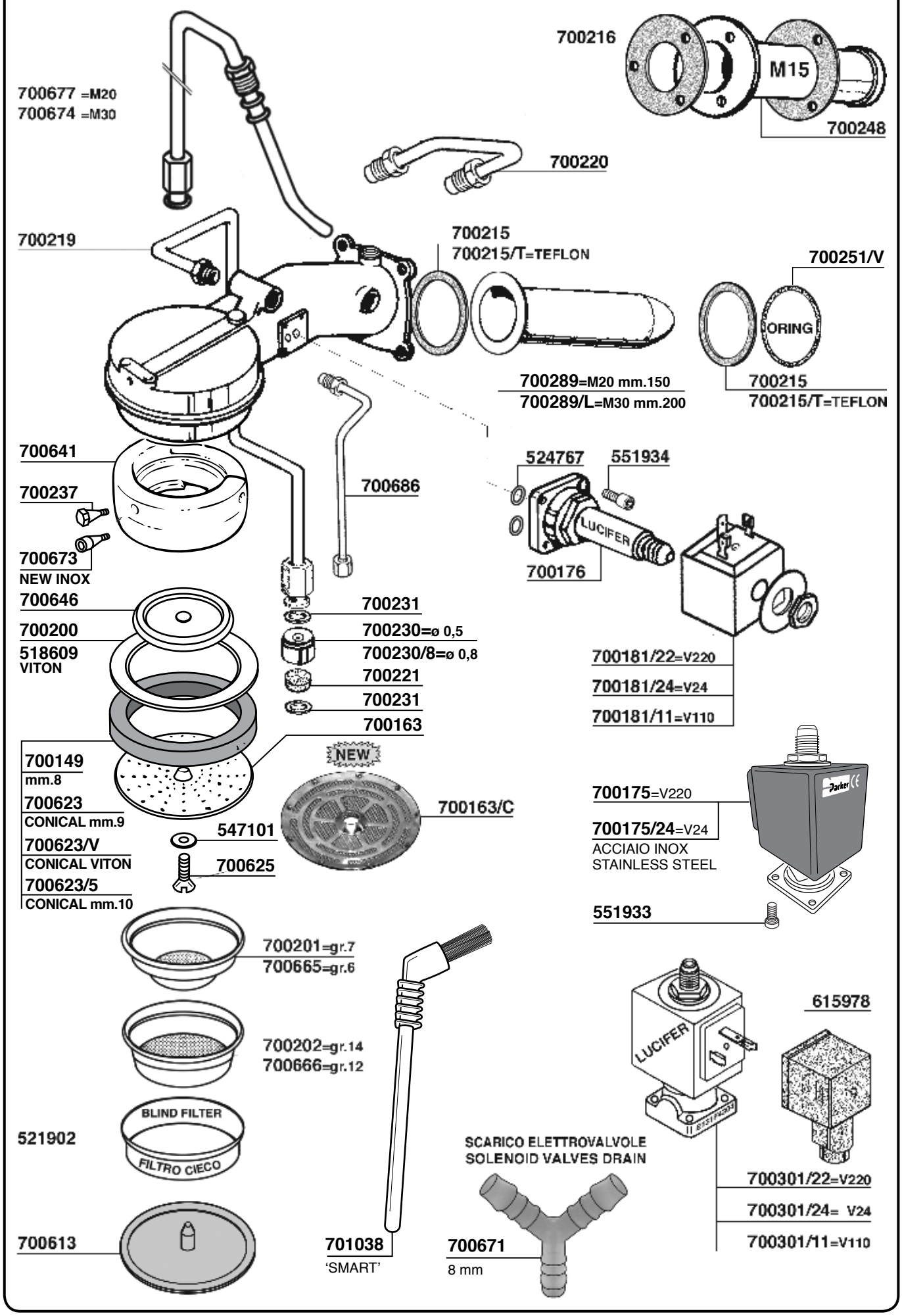

NUOVA RICAMBI PARTI COMPATIBILI CIMBALI Tav. 02

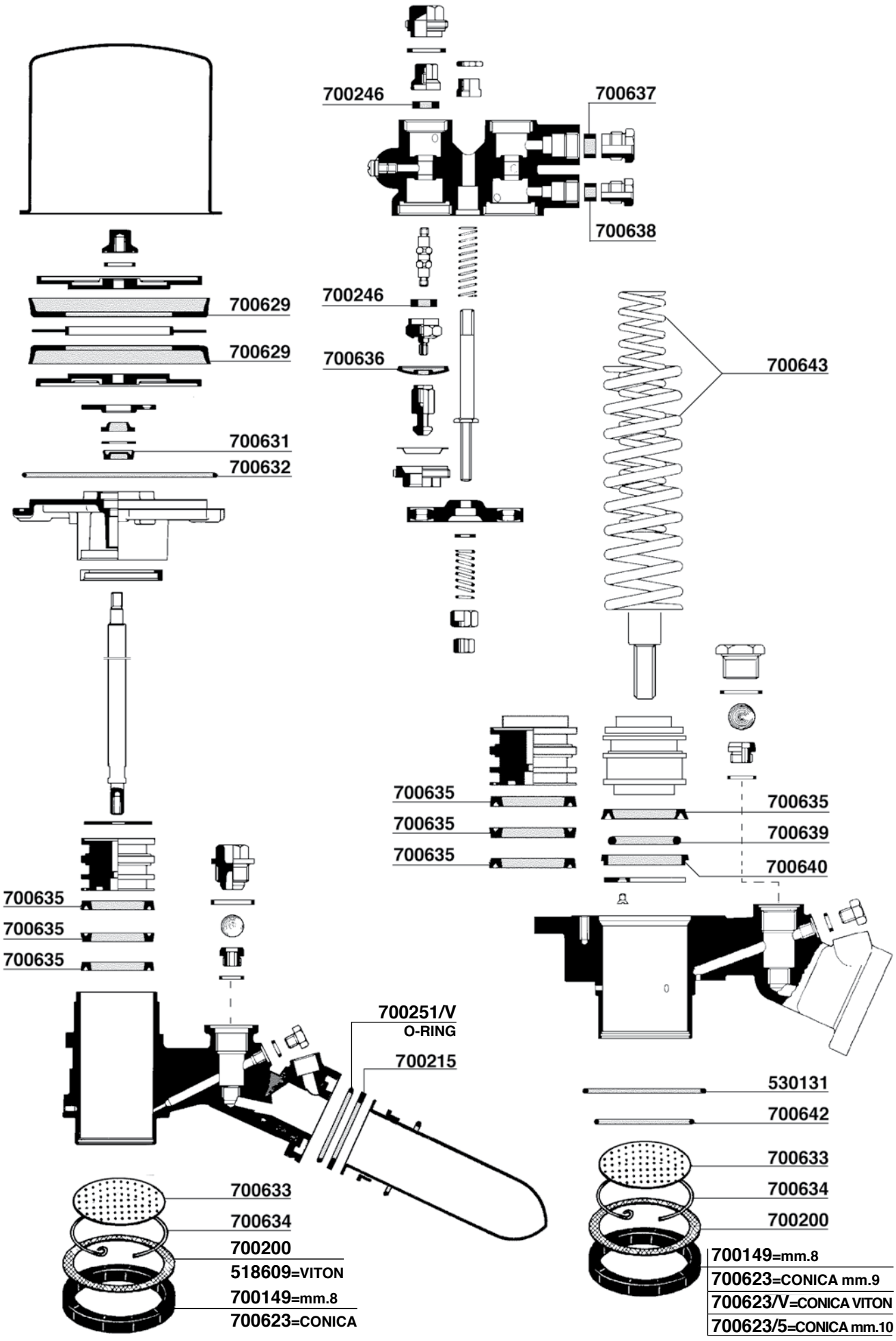

NUOVA RICAMBI PARTI COMPATIBILI CIMBALI Tav. 03

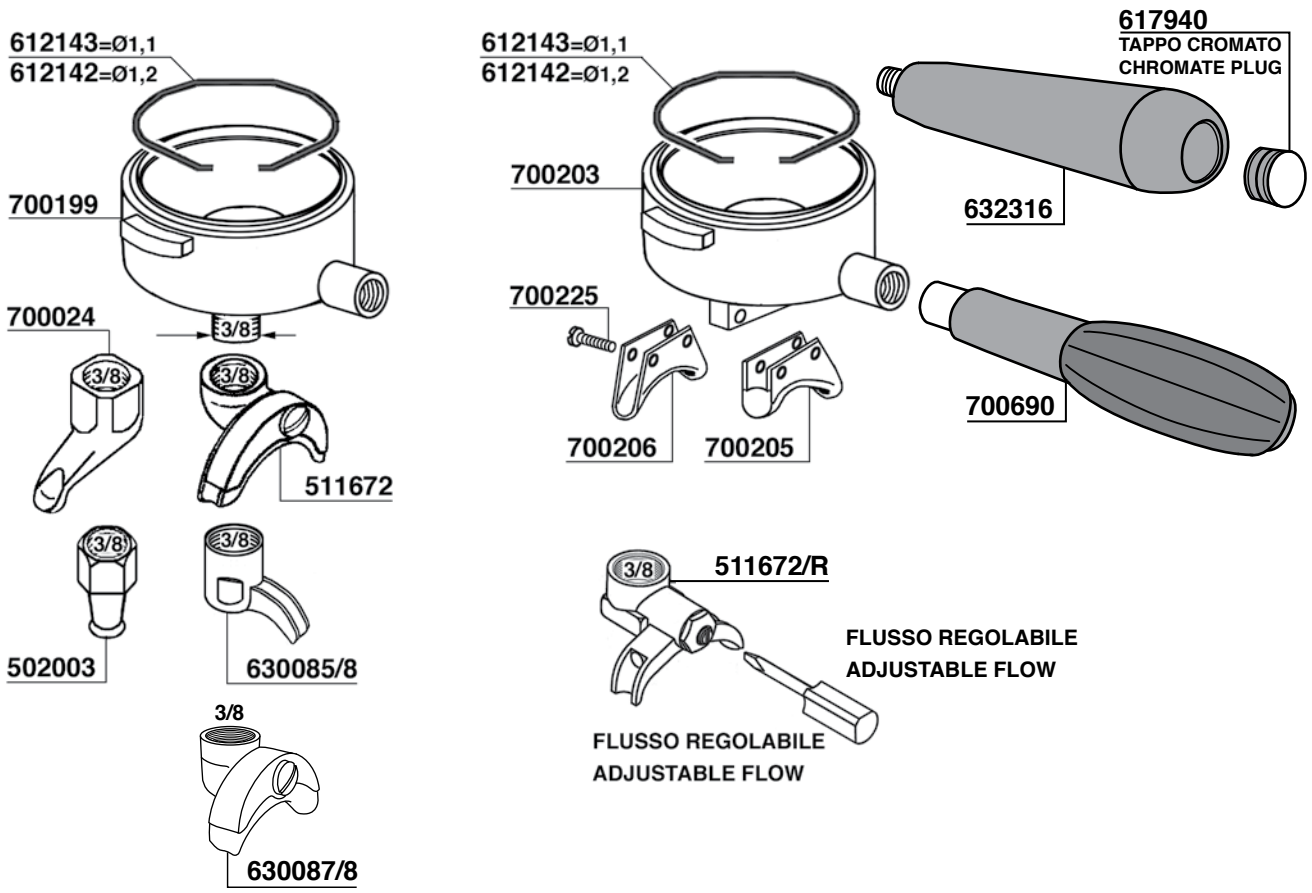

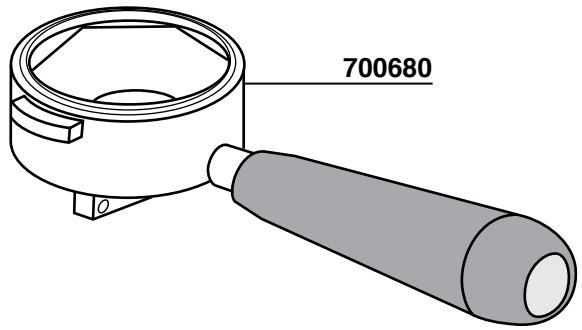

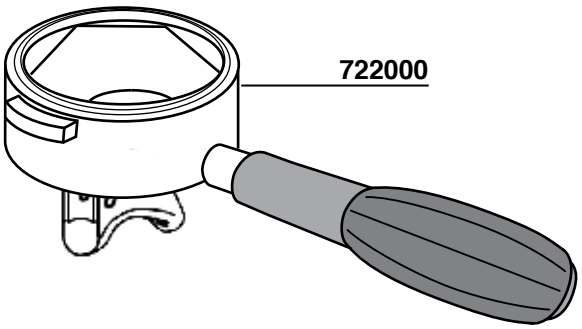

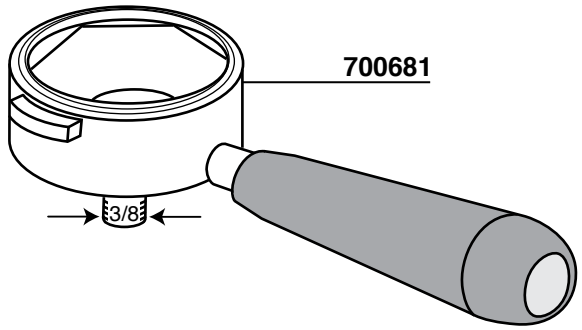

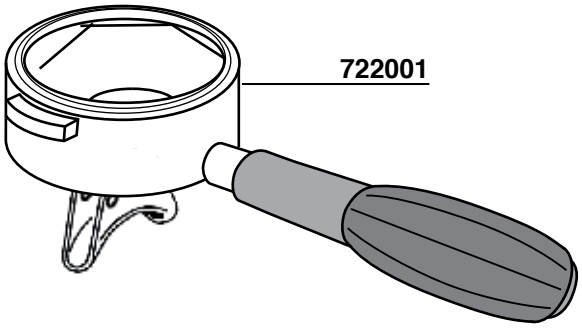

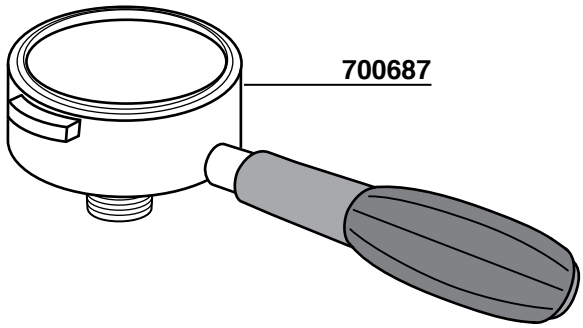

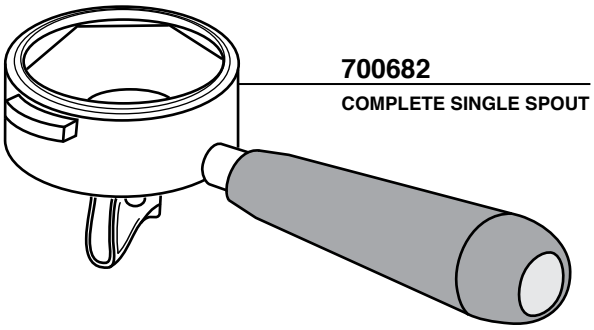
700682
COMPLETE SINGLE SPOUT

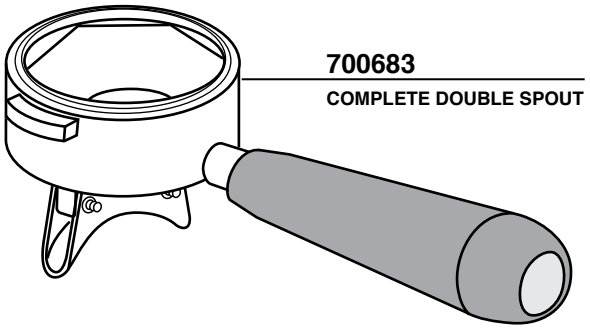
700683
COMPLETE DOUBLE SPOUT

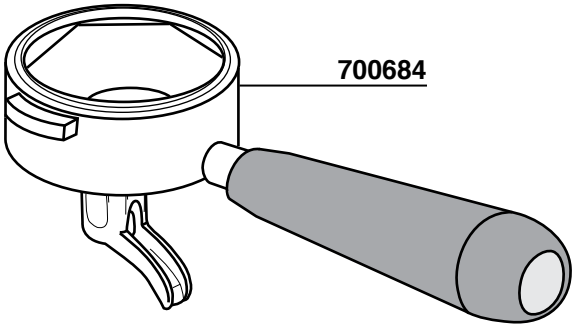
700684

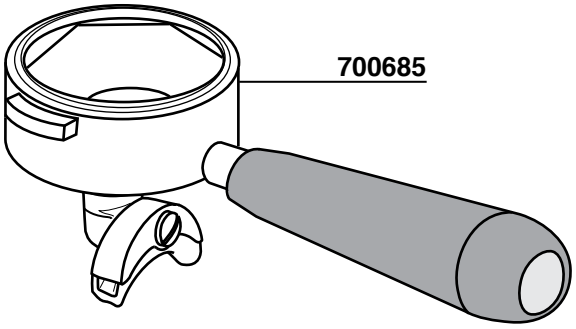
700685

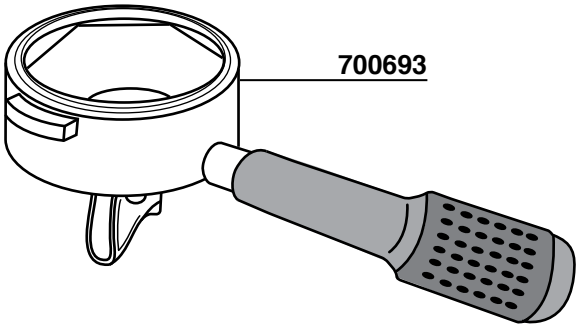
700693

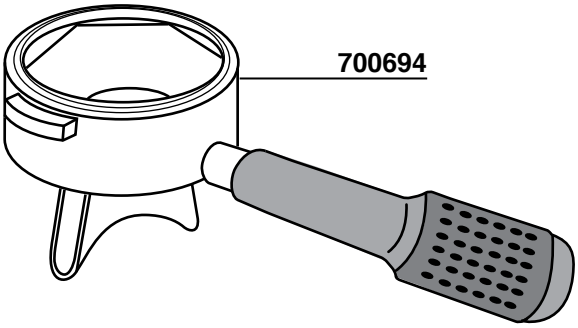
700694

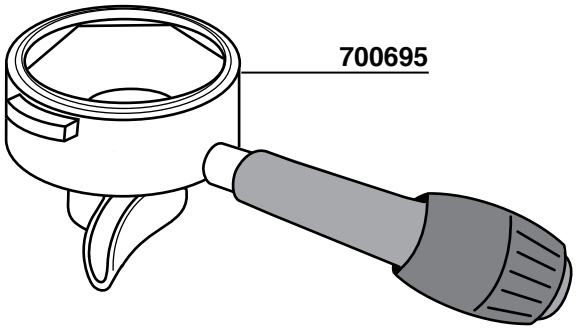
700695

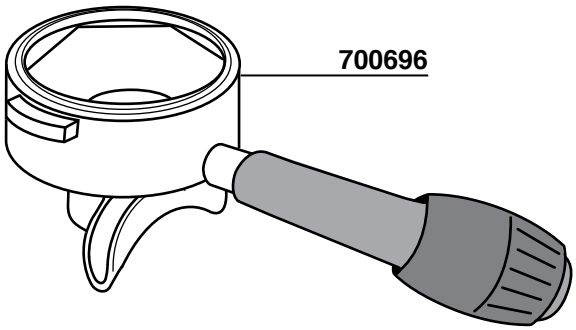
700696

NUOVA RICAMBI PARTI COMPATIBILI CIMBALI Tav. 05

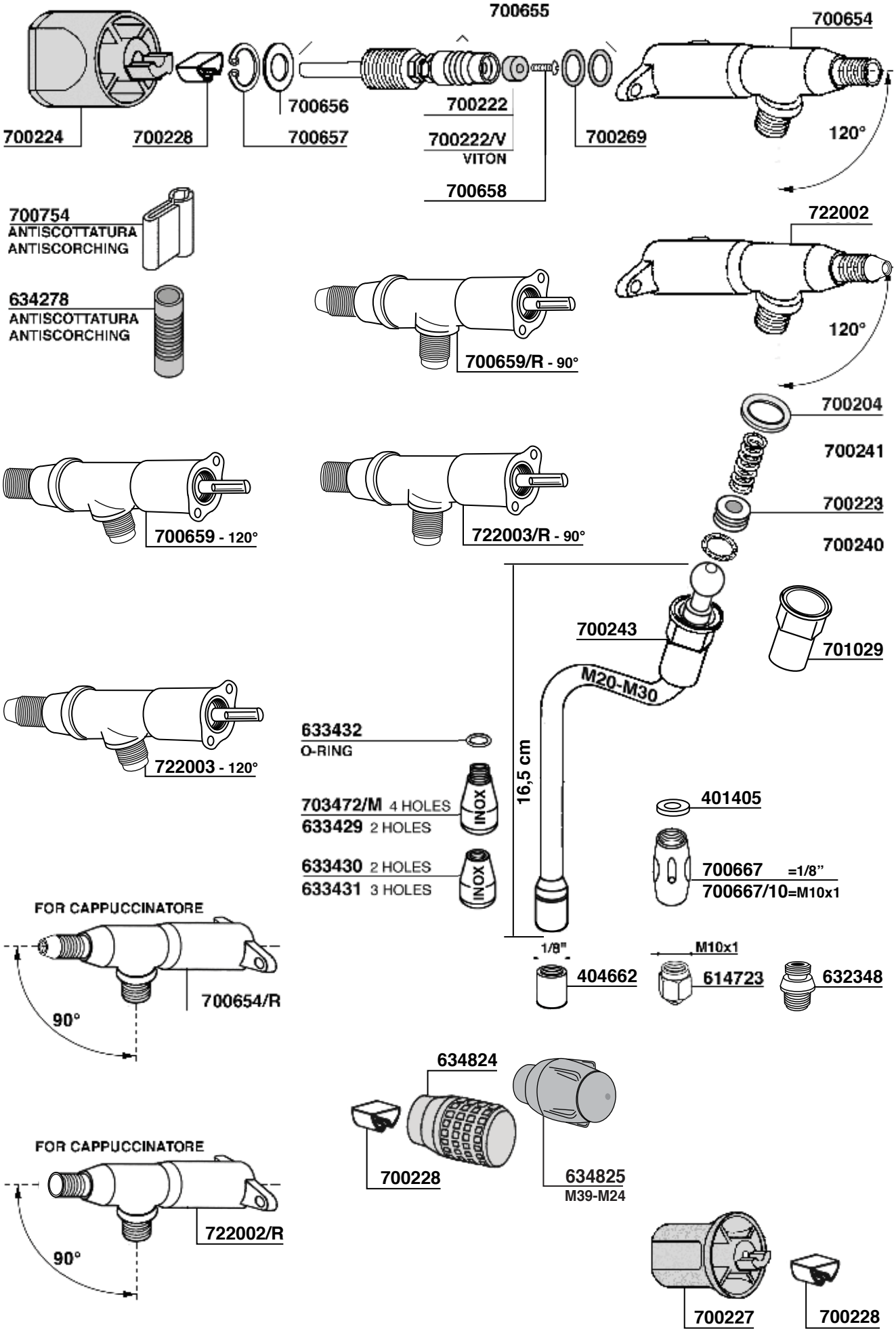

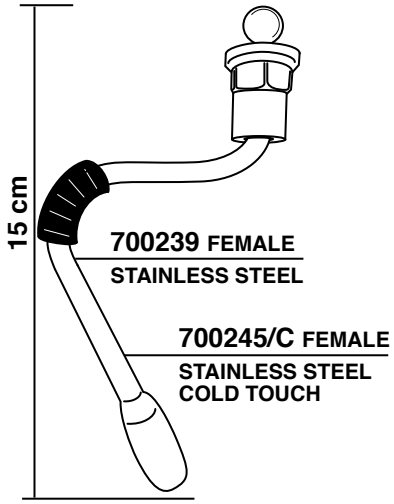

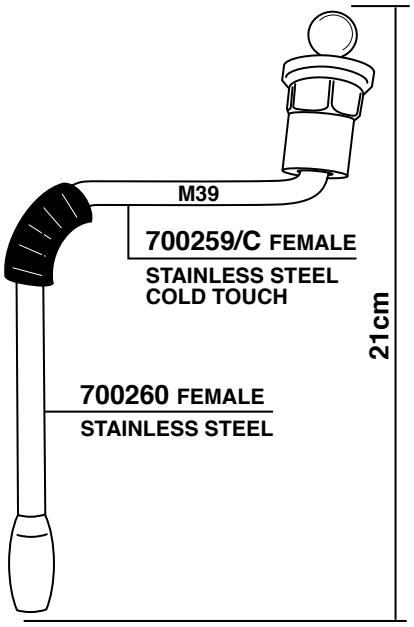

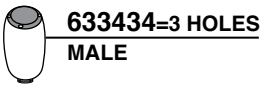
633434=3 HOLES
MALE

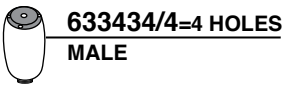
633434/4=4 HOLES
MALE

528874

632348

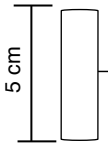

528875
STAINLESS STEEL
EXTENSION

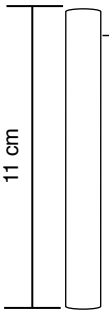

528876
STAINLESS STEEL
EXTENSION

530138

528872 2 HOLES

528873 4 HOLES

633433=3 HOLES
FEMALE

633433/4=4 HOLES
FEMALE

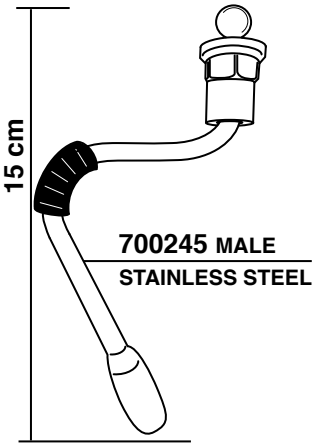

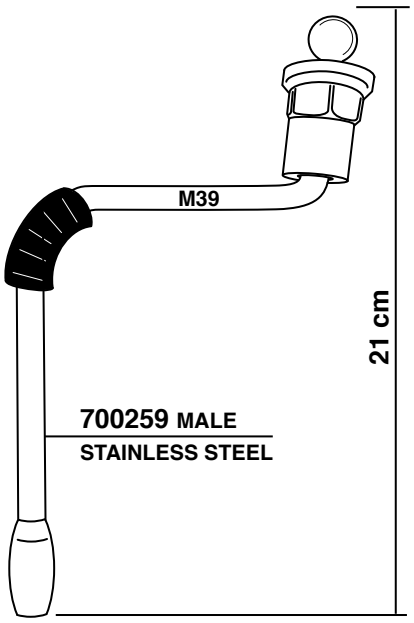

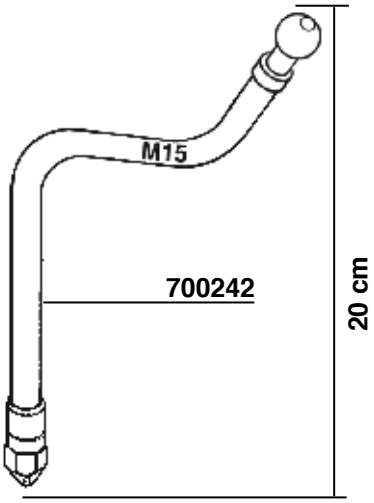

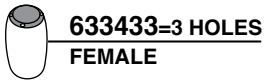
633433=3 HOLES
FEMALE

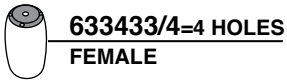
633433/4=4 HOLES
FEMALE

NUOVA RICAMBI PARTI COMPATIBILI CIMBALI Tav. 07

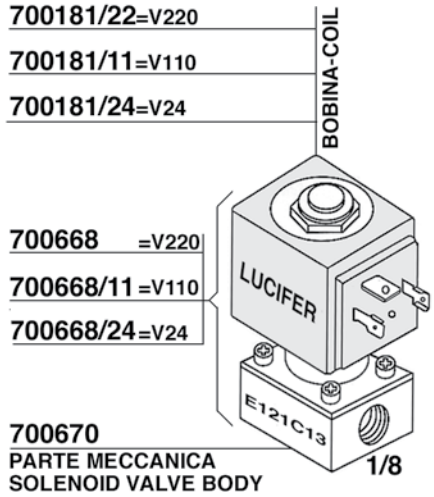

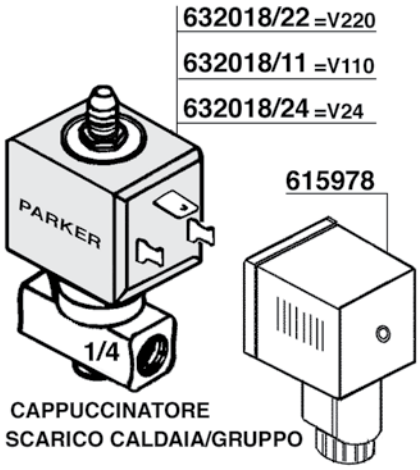

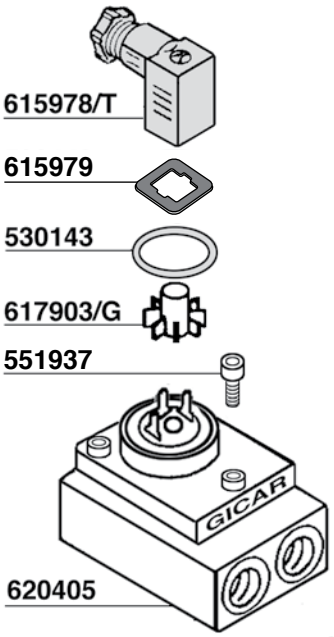

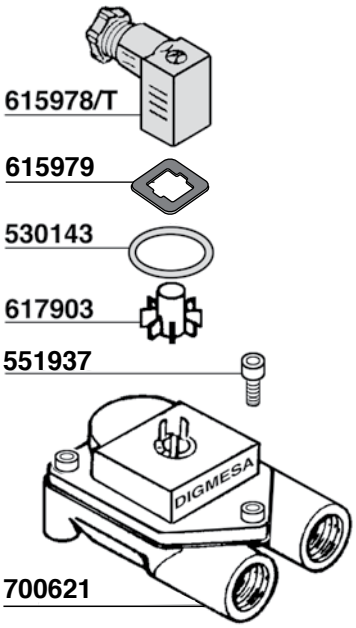

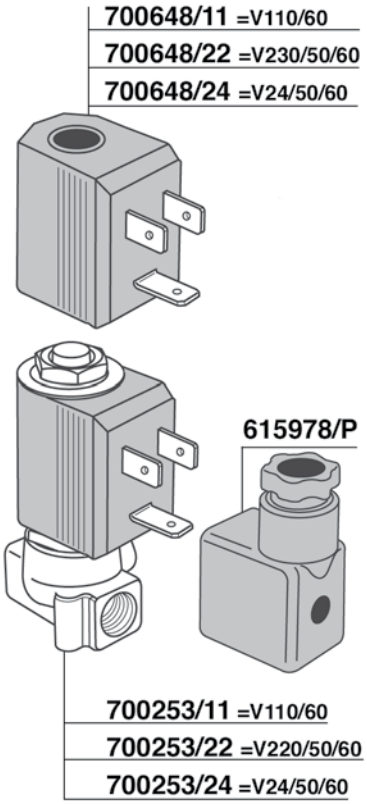

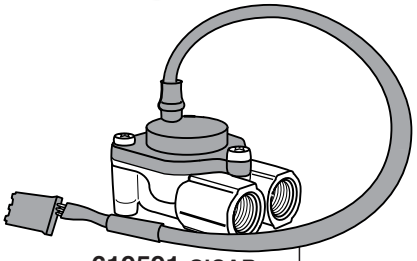

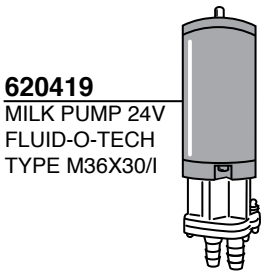

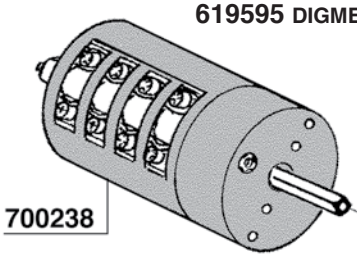

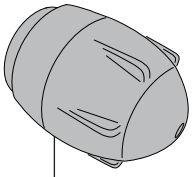

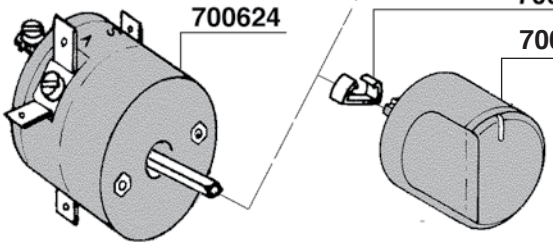

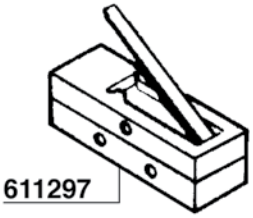

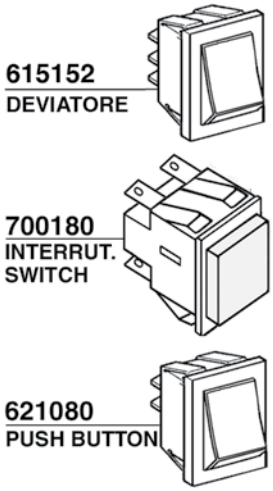

PUMP M32

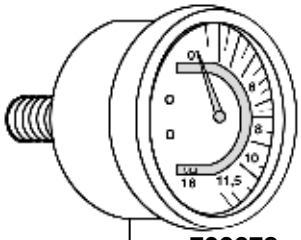

700678

BOILER M32

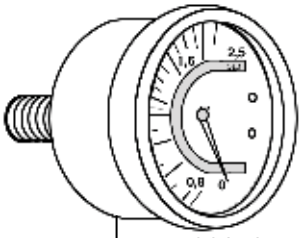

700679

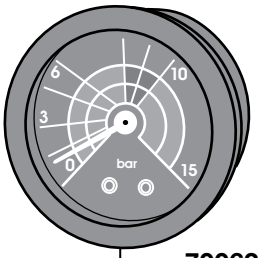

700620
PUMP

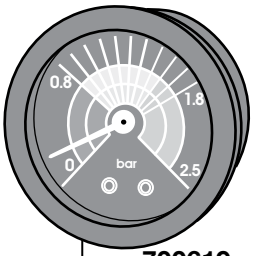

700619
BOILER

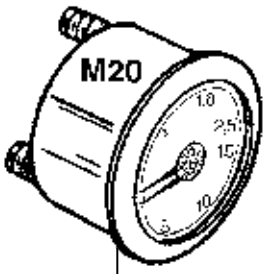

700874
DOPPIA SCALA
TWO SCALES

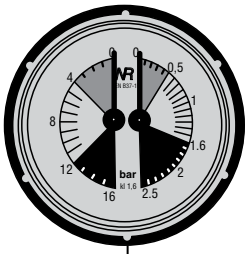

602001
DOPPIA SCALA
TWO SCALES

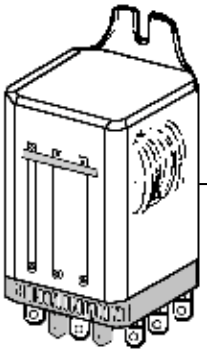

700652/22=V220
700652/24=V24
700652/12=V12 DC BISTRO

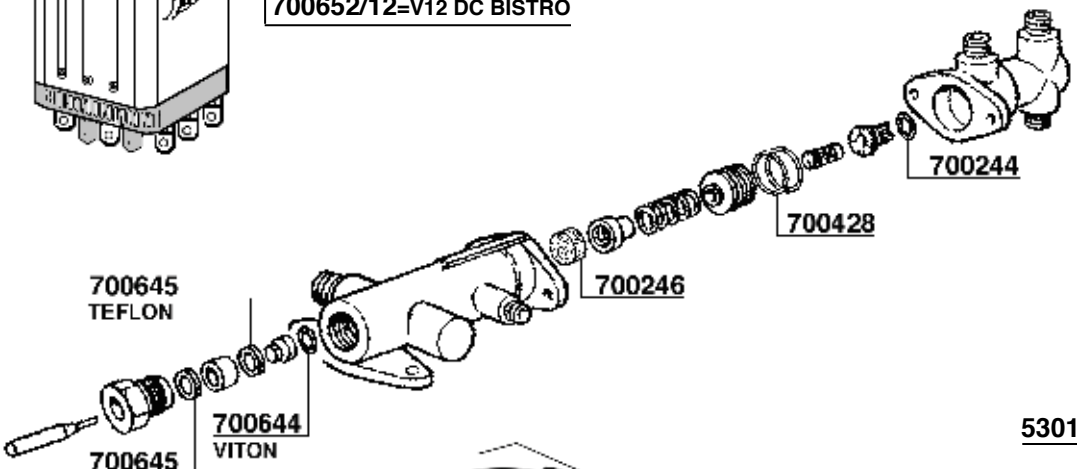

700244
700428
700246
700645
TEFLON
700644
VITON
700645
TEFLON

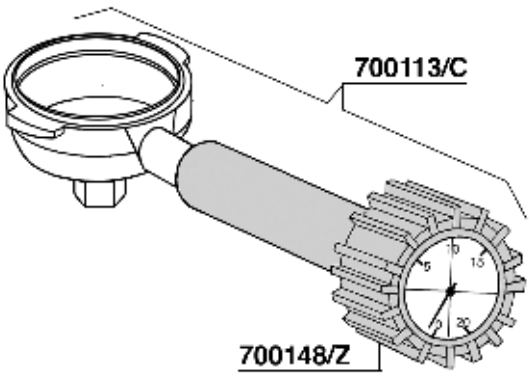

700113/C
700148/Z

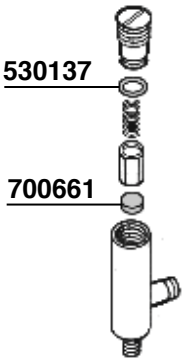

530137
700661

NUOVA RICAMBI PARTI COMPATIBILI CIMBALI Tav. 09

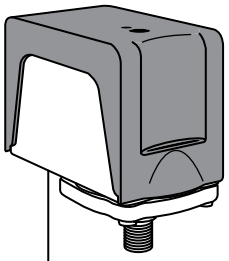

616597 CE/UL

700210=GR/1 W1700 V220/380
700212=GR/3 W5790 V220/380
700209=GR/2 W3750 V220/380
700213=ALINA W2850 V220/380

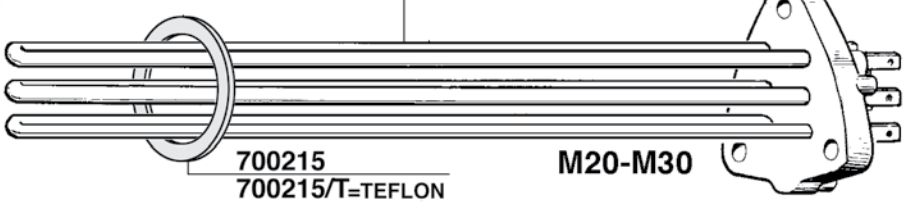

700215
700215/T=TEFLON
M20-M30

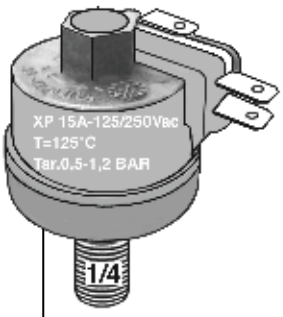

700662

700214
700207/22=GR/1 W2700 V220
700208/22=GR/2 W4000 V220

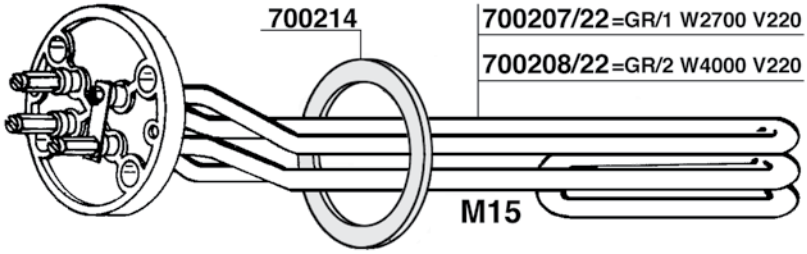

M15

700215
700215/T=TEFLON

700647/22=W1300 V220
700647/11 =W1300 V110

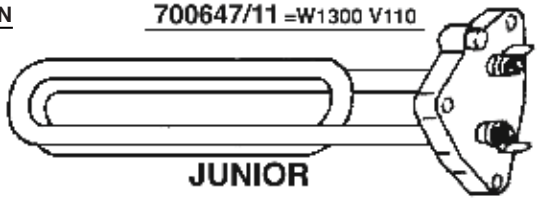

JUNIOR

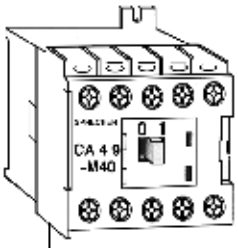

700653/22=V220/50 M30 CLASSIC
700653/12=V12 DC M30-DOSATRON
700653/24=V24 DC

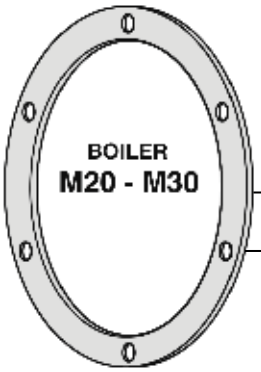

700252
700229
700229/T
TEFLON

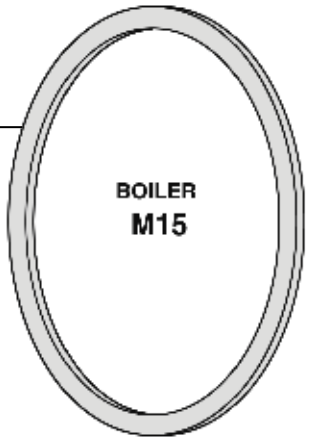

700663=V220

703237

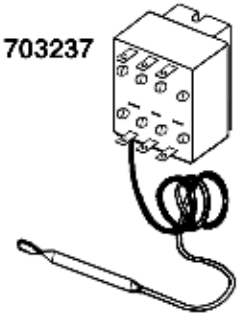

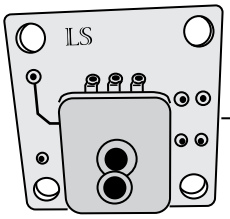

602000
TRASDUTTORE PRESSIONE
PRESSURE SENSOR

MAGNETE 700672

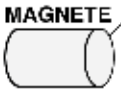

GALLEGGIANTE 700669

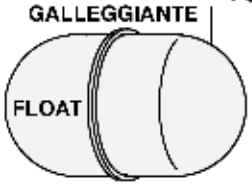

700651

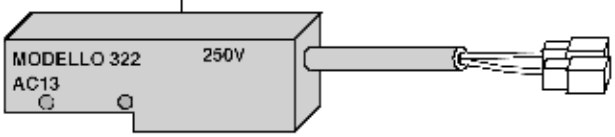

620466

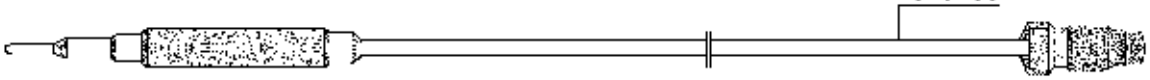

700097

NUOVA RICAMBI PARTI COMPATIBILI CIMBALI Tav. 10

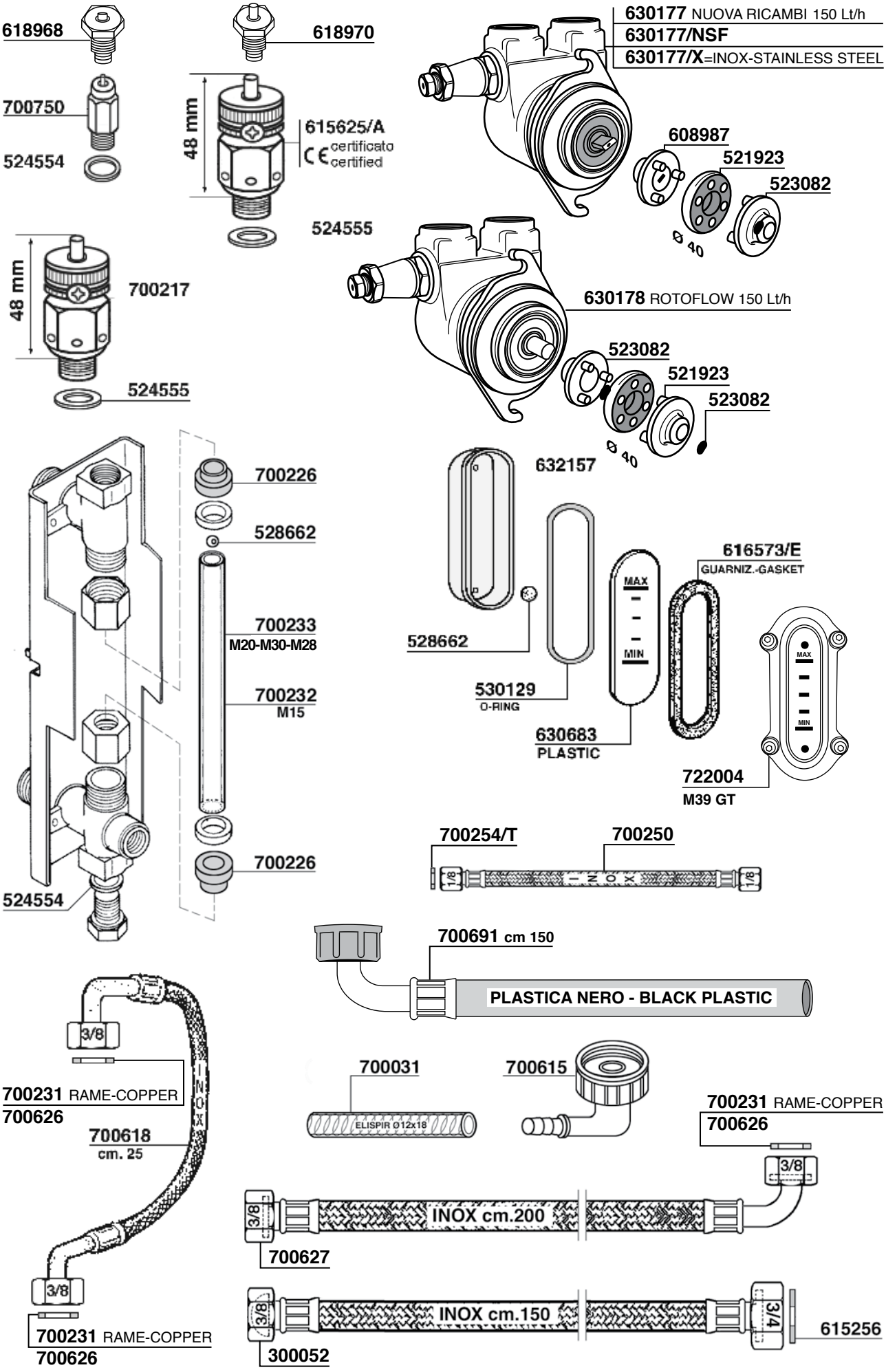

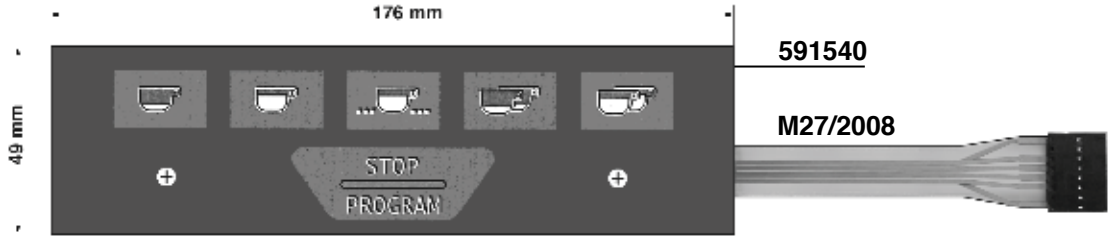

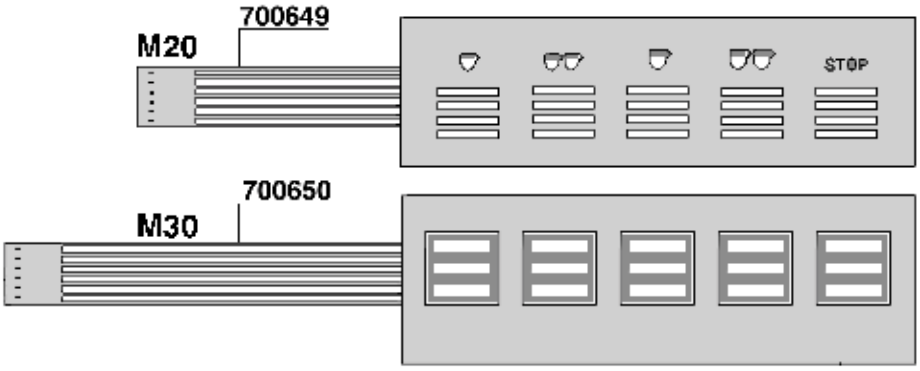

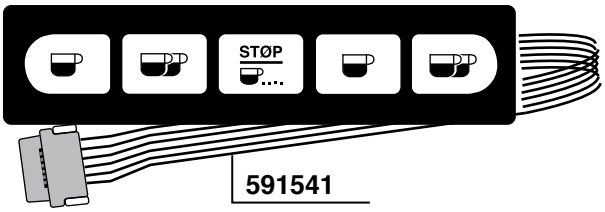

591541
M21 JUNIOR

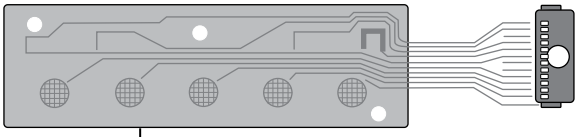

591542
M32

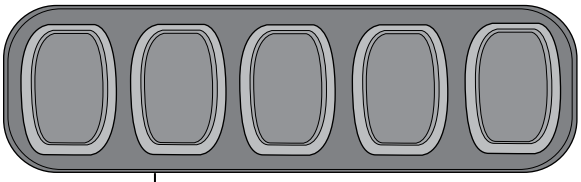

591544
M39

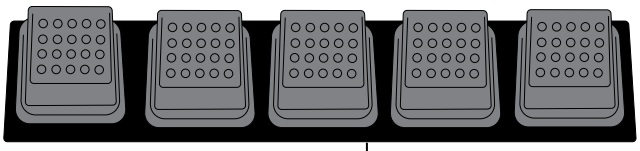

591543
M32 DOSATRON

591545
M39 GT CLASS

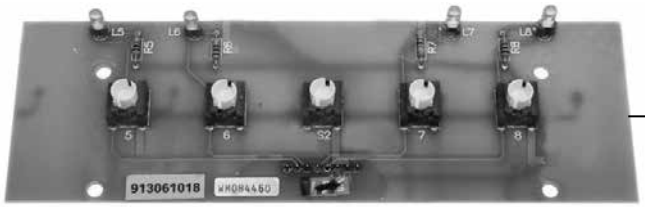

591546
M39 DOSATRON R - M39 GT

591547
M39 CLASSIC

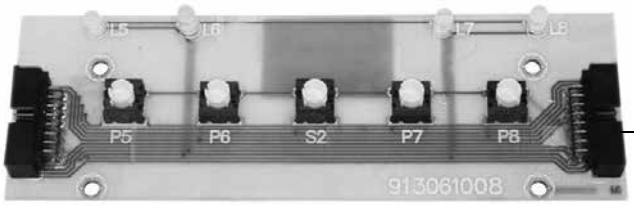

591548
M39 DOSATRON

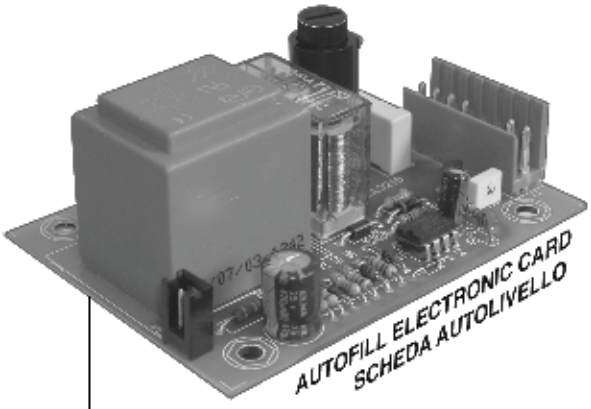

591000
V220 M27

SCHEDA ELETTRONICA UNIFICATA
UNIFIED ELECTRONIC CARD

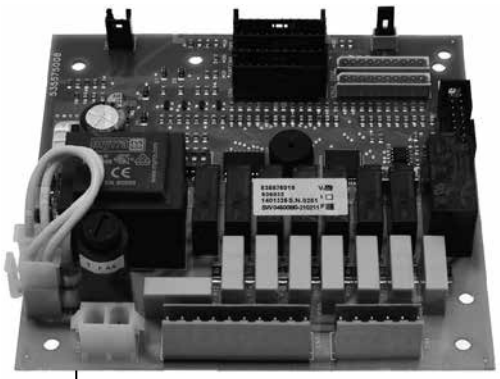

591549
M22-M24-M27/2007-M29-M39

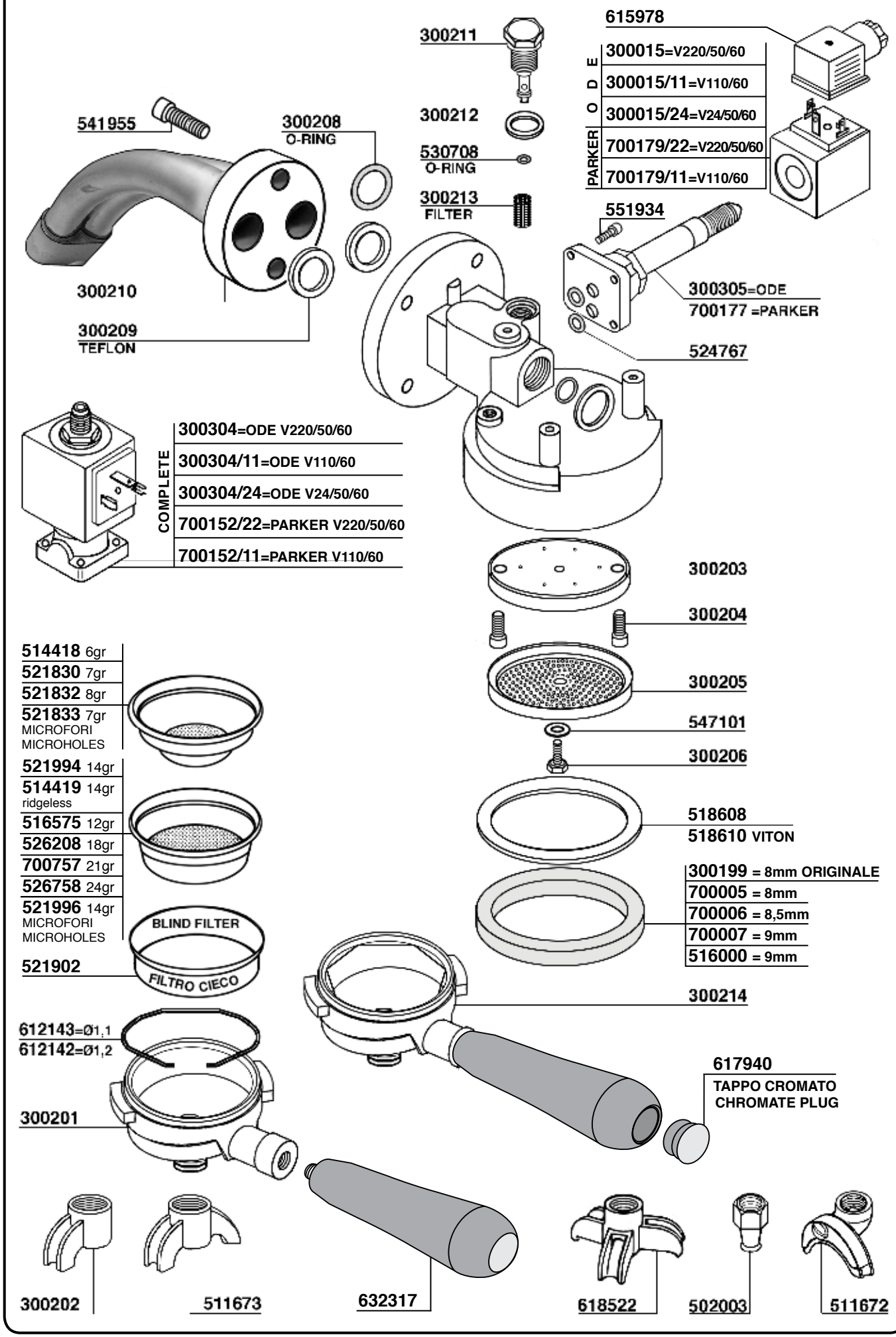
615978
300211
300015=V220/50/60
300015/11=V110/60
300015/24=V24/50/60
700179/22=V220/50/60
700179/11=V110/60
ODE
PARKER
541955
300208
O-RING
300212
530708
O-RING
300213
FILTER
551934
300305=ODE
700177 =PARKER
300210
300209
TEFLON
524767
300304=ODE V220/50/60
300304/11=ODE V110/60
300304/24=ODE V24/50/60
700152/22=PARKER V220/50/60
700152/11=PARKER V110/60
COMPLETE
300203
300204
300205
547101
300206
514418 6gr
521830 7gr
521832 8gr
521833 7gr
MICROFORI
MICROHOLES
521994 14gr
514419 14gr
ridgeless
516575 12gr
526208 18gr
700757 21gr
526758 24gr
521996 14gr
MICROFORI
MICROHOLES
BLIND FILTER
FILTRO CIECO
521902
518608
518610 VITON
300199 = 8mm ORIGINALE
700005 = 8mm
700006 = 8,5mm
700007 = 9mm
516000 = 9mm
300214
612143=Ø1,1
612142=Ø1,2
300201
617940
TAPPO CROMATO
CHROMATE PLUG
300202
511673
632317
618522
502003
511672

CONTI

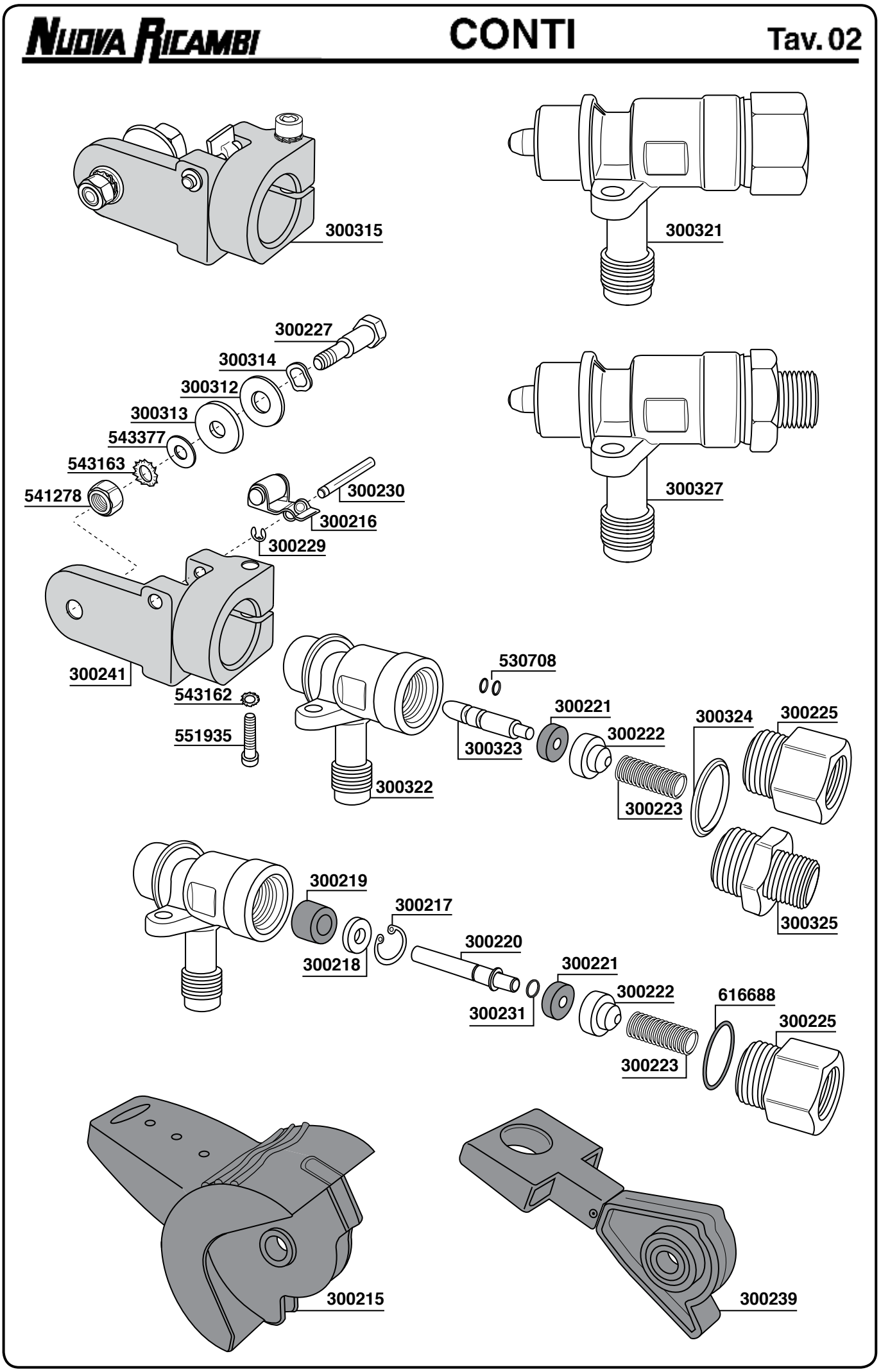
300315
300321
300227
300314
300312
300313
543377
543163
541278
300230
300216
300229
300327
300241
543162
551935
530708
300323
300221
300222
300324
300225
300322
300223
300325
300219
300217
300218
300220
300231
300221
300222
616688
300225
300223
300215
300239

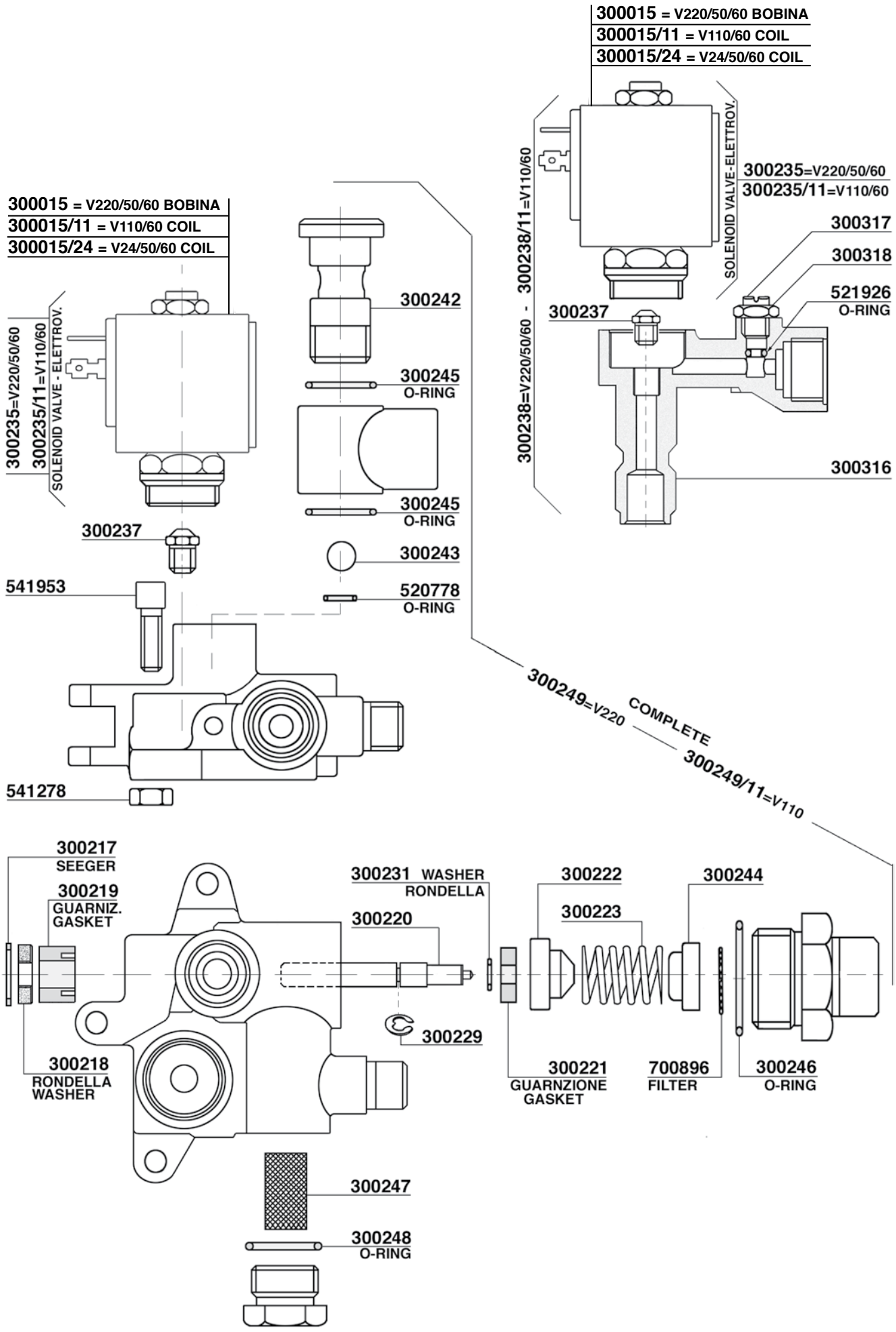
300015 = V220/50/60 BOBINA
300015/11 = V110/60 COIL
300015/24 = V24/50/60 COIL
300235=V220/50/60
300235/11=V110/60
SOLENOID VALVE - ELETTROV.
300238/11=V110/60
300238=V220/50/60 -
300235=V220/50/60
300235/11=V110/60
300317
300318
521926
O-RING
300237
300316
300242
300245
O-RING
300245
O-RING
300237
300243
520778
O-RING
541953
541278
300249=V220
COMPLETE
300249/11=V110
300217
SEEGER
300219
GUARNIZ.
GASKET
300231 WASHER
RONDELLA
300222
300244
300223
300220
300229
300218
RONDELLA
WASHER
300221
GUARNZIONE
GASKET
700896
FILTER
300246
O-RING
300247
300248
O-RING

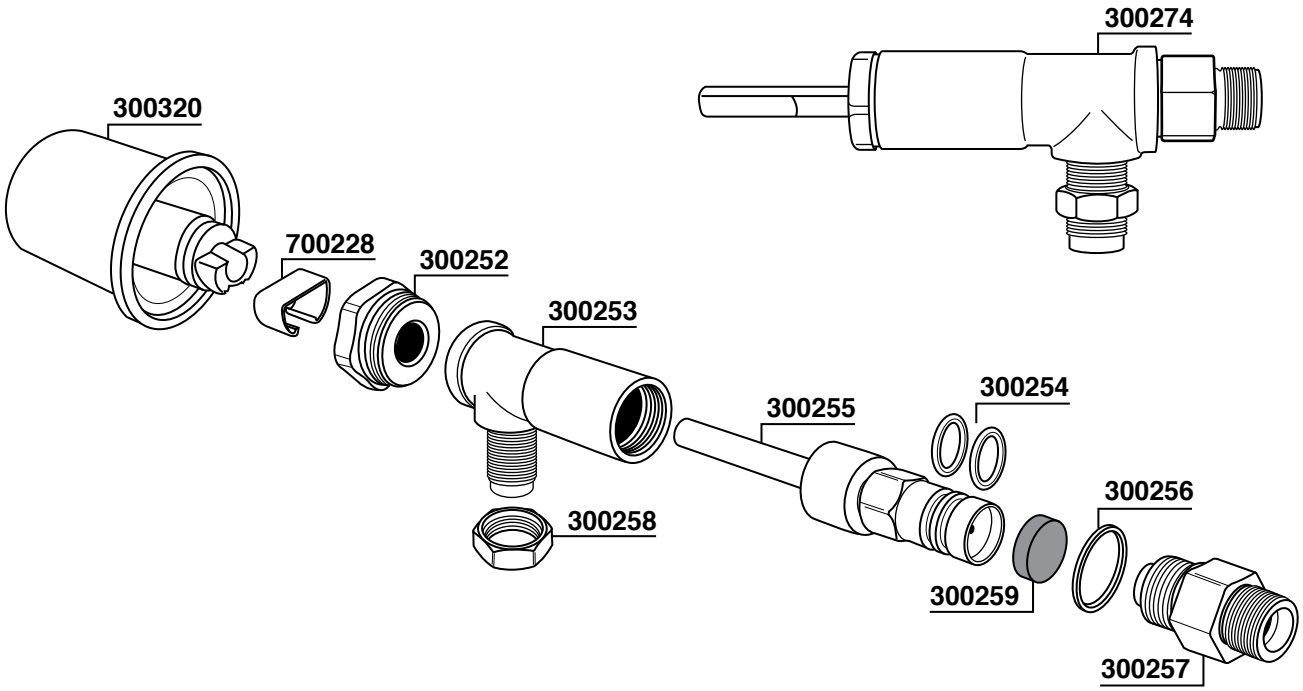
300274
300320
700228
300252
300253
300254
300255
300256
300258
300259
300257

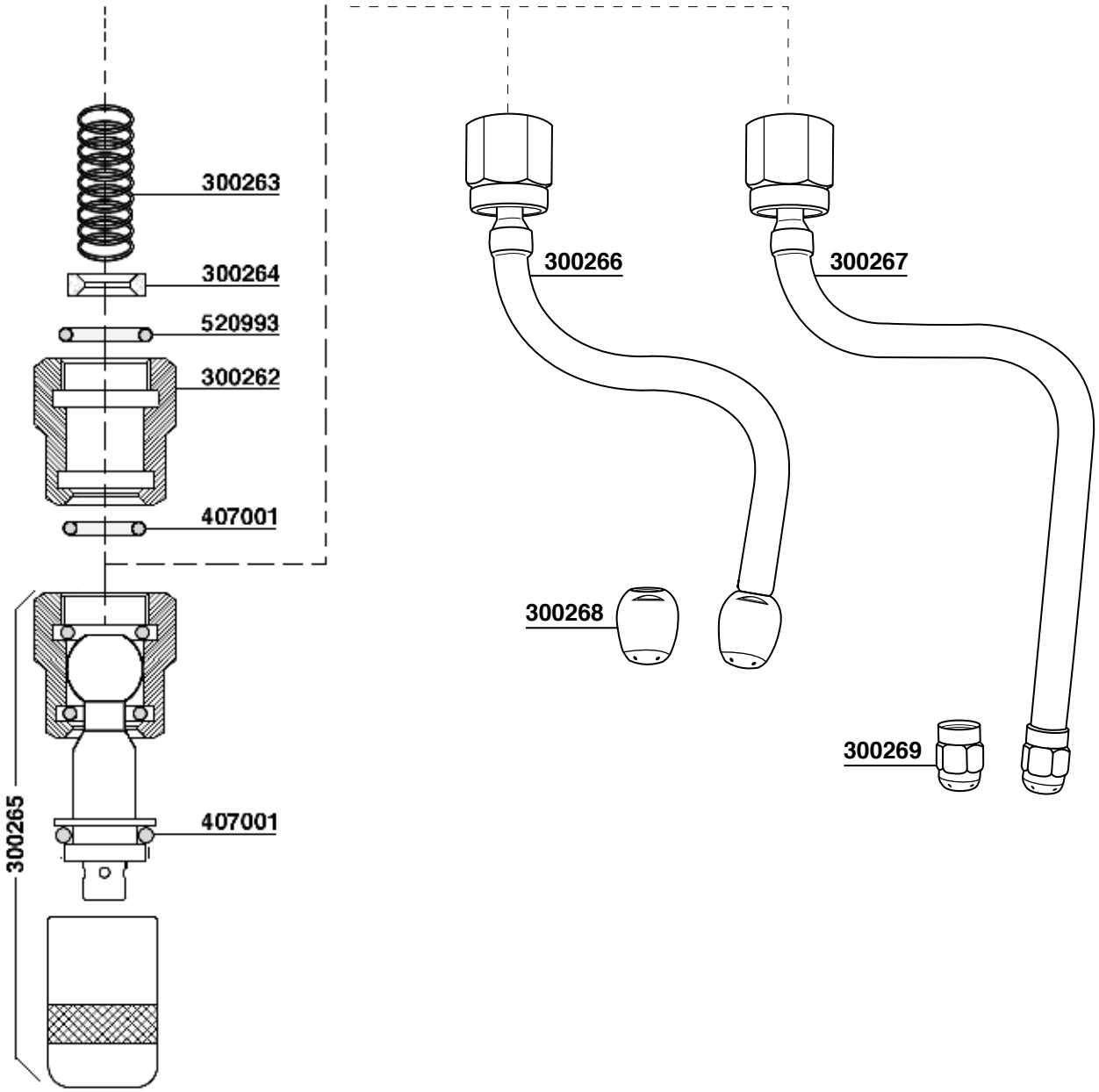
300263
300264
520993
300262
407001
300266
300267
300268
300269
300265
407001

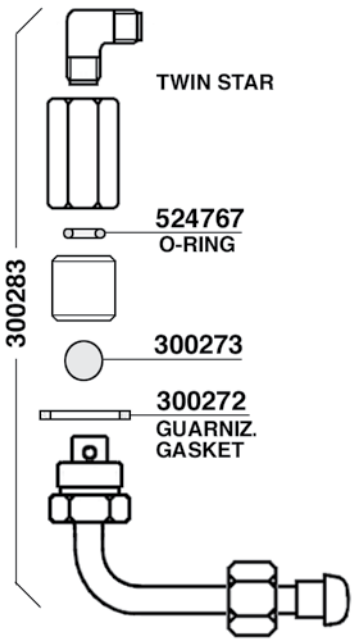
TWIN STAR
524767
O-RING
300283
300273
300272
GUARNIZ.
GASKET

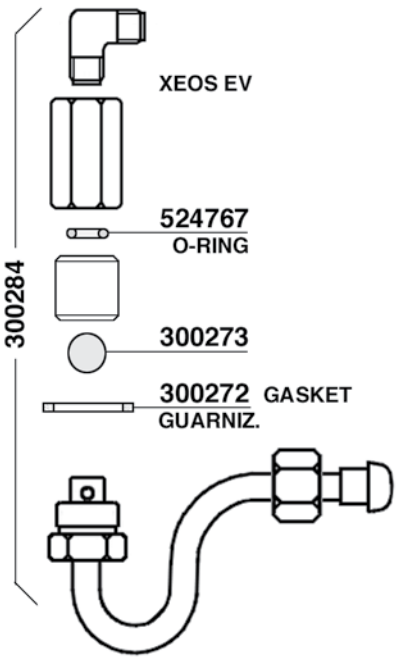
XEOS EV
524767
O-RING
300284
300273
300272 GASKET
GUARNIZ.

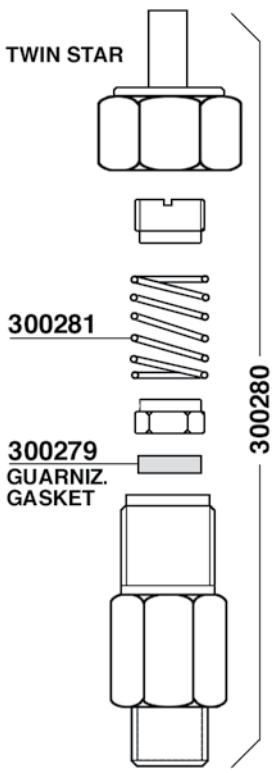
TWIN STAR
300281
300279
GUARNIZ.
GASKET
300280

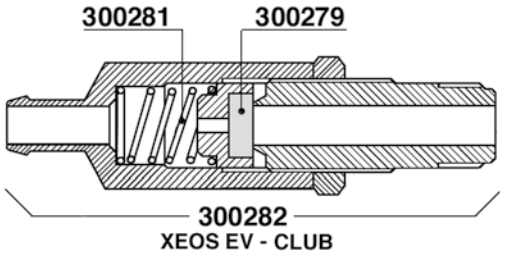
300281
300279
300282
XEOS EV - CLUB

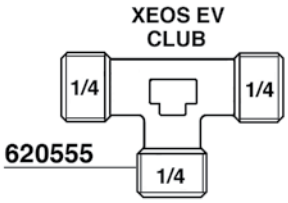
XEOS EV
CLUB
1/4
1/4
620555
1/4

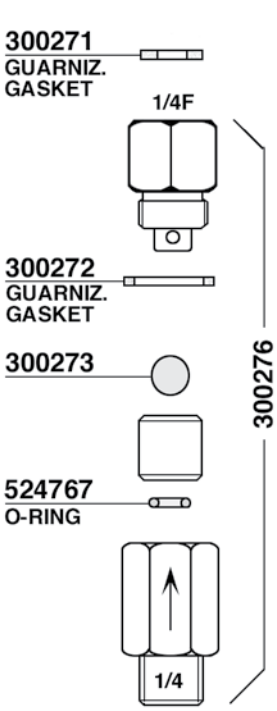
300271
GUARNIZ.
GASKET
1/4F
300272
GUARNIZ.
GASKET
300273
524767
O-RING
1/4
300276

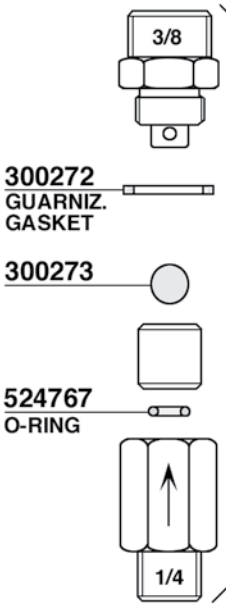
3/8
300272
GUARNIZ.
GASKET
300273
524767
O-RING
1/4
300275

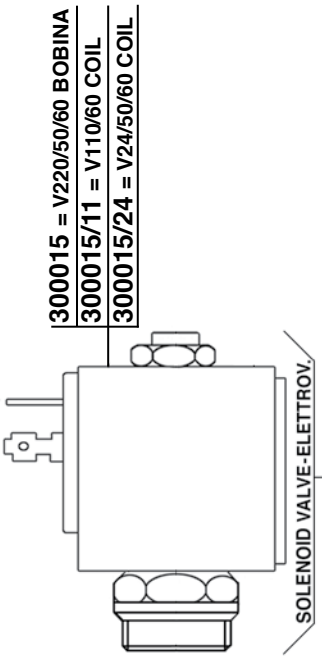
300015 = V220/50/60 BOBINA
300015/11 = V110/60 COIL
300015/24 = V24/50/60 COIL
SOLENOID VALVE-ELETTROV.
300235=V220/50/60
300235/11=V110/60

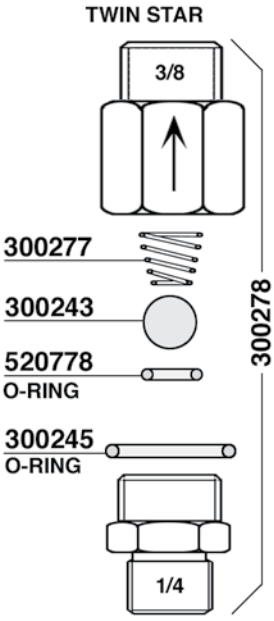
TWIN STAR
3/8
300277
300243
520778
O-RING
300245
O-RING
1/4
300278

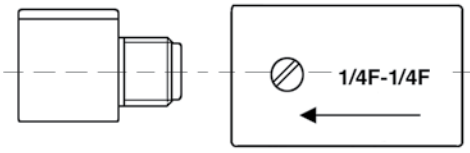
1/4F-1/4F
XEOS EV - CLUB

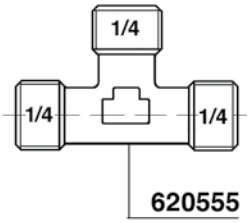
1/4
1/4
1/4
620555

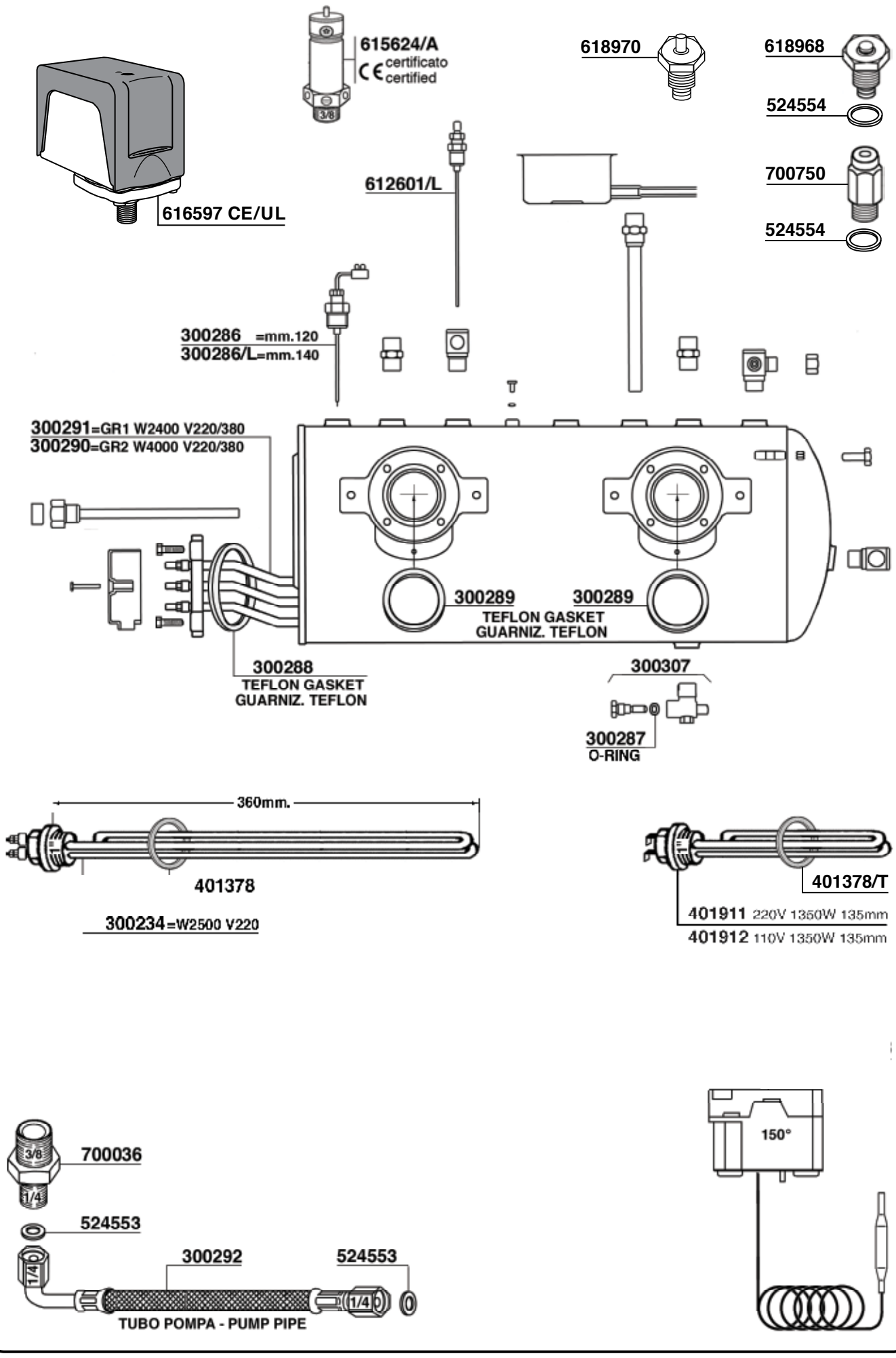
615624/A
certificato
certified
3/8
618970
618968
524554
700750
524554
616597 CE/UL
612601/L
300286 =mm.120
300286/L=mm.140
300291=GR1 W2400 V220/380
300290=GR2 W4000 V220/380
300289
300289
TEFLON GASKET
GUARNIZ. TEFLON
300288
TEFLON GASKET
GUARNIZ. TEFLON
300307
300287
O-RING
360mm.
401378
300234=W2500 V220
401378/T
401911 220V 1350W 135mm
401912 110V 1350W 135mm
700036
3/8
1/4
524553
300292
524553
1/4
1/4
TUBO POMPA - PUMP PIPE
150°

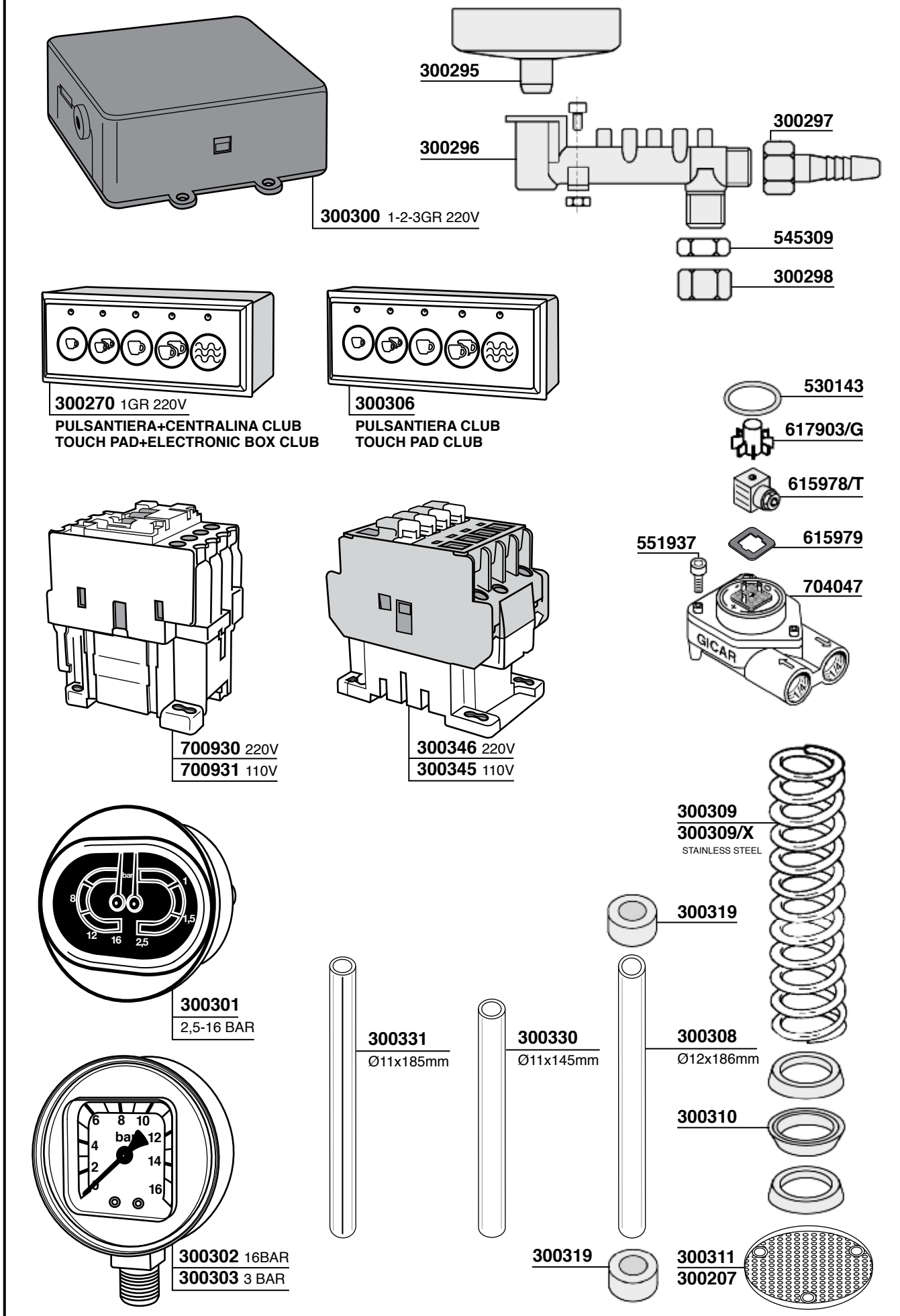
300295
300296
300297
300300 1-2-3GR 220V
545309
300298
300270 1GR 220V
PULSANTIERA+CENTRALINA CLUB
TOUCH PAD+ELECTRONIC BOX CLUB
300306
PULSANTIERA CLUB
TOUCH PAD CLUB
530143
617903/G
615978/T
615979
551937
704047
GICAR
700930 220V
700931 110V
300346 220V
300345 110V
300309
300309/X
STAINLESS STEEL
300319
300301
2,5-16 BAR
300331
Ø11x185mm
300330
Ø11x145mm
300308
Ø12x186mm
300310
300302 16BAR
300303 3 BAR
300319
300311
300207

DALLA CORTE

Tav. 01

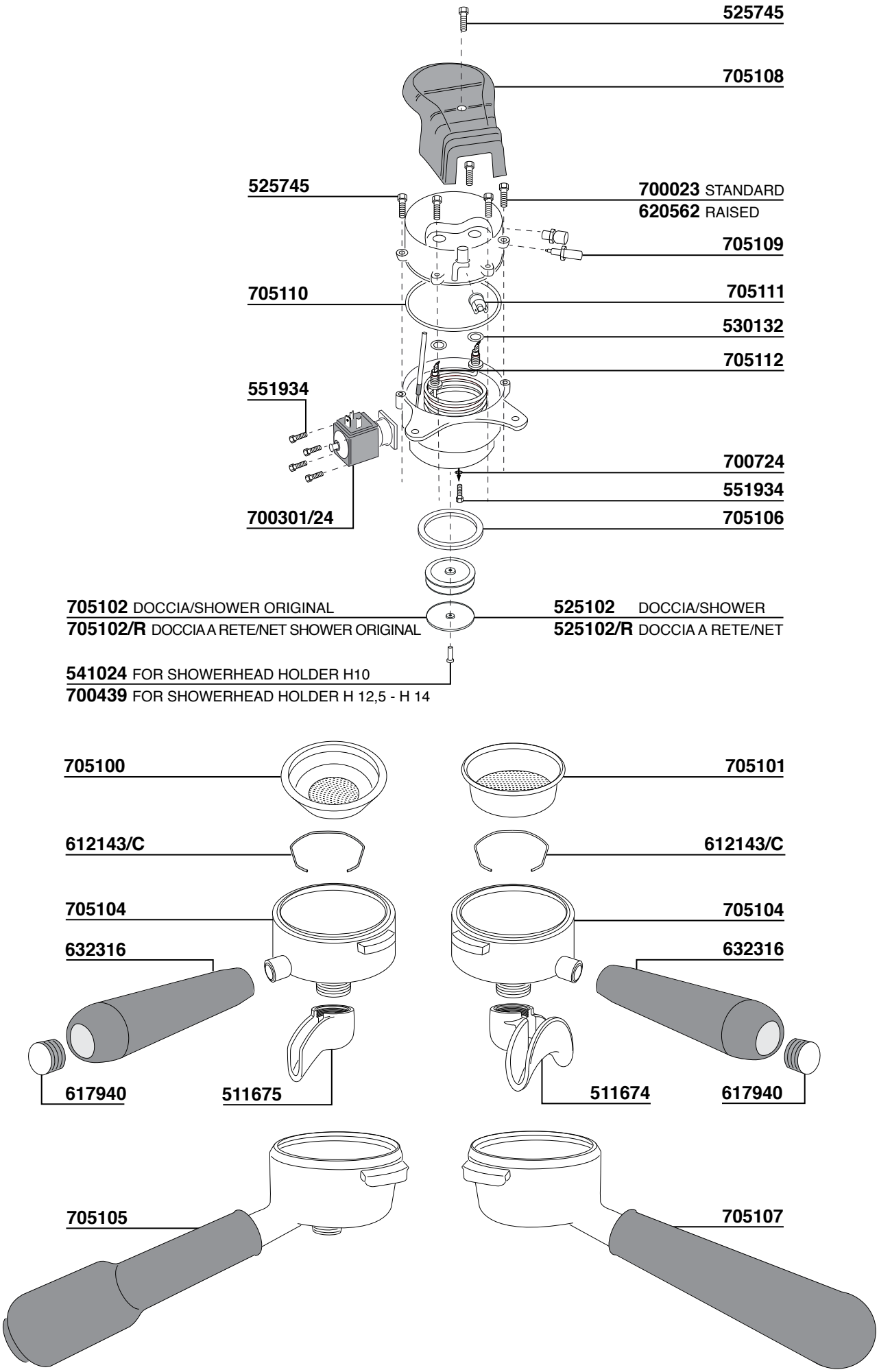

DALLA CORTE

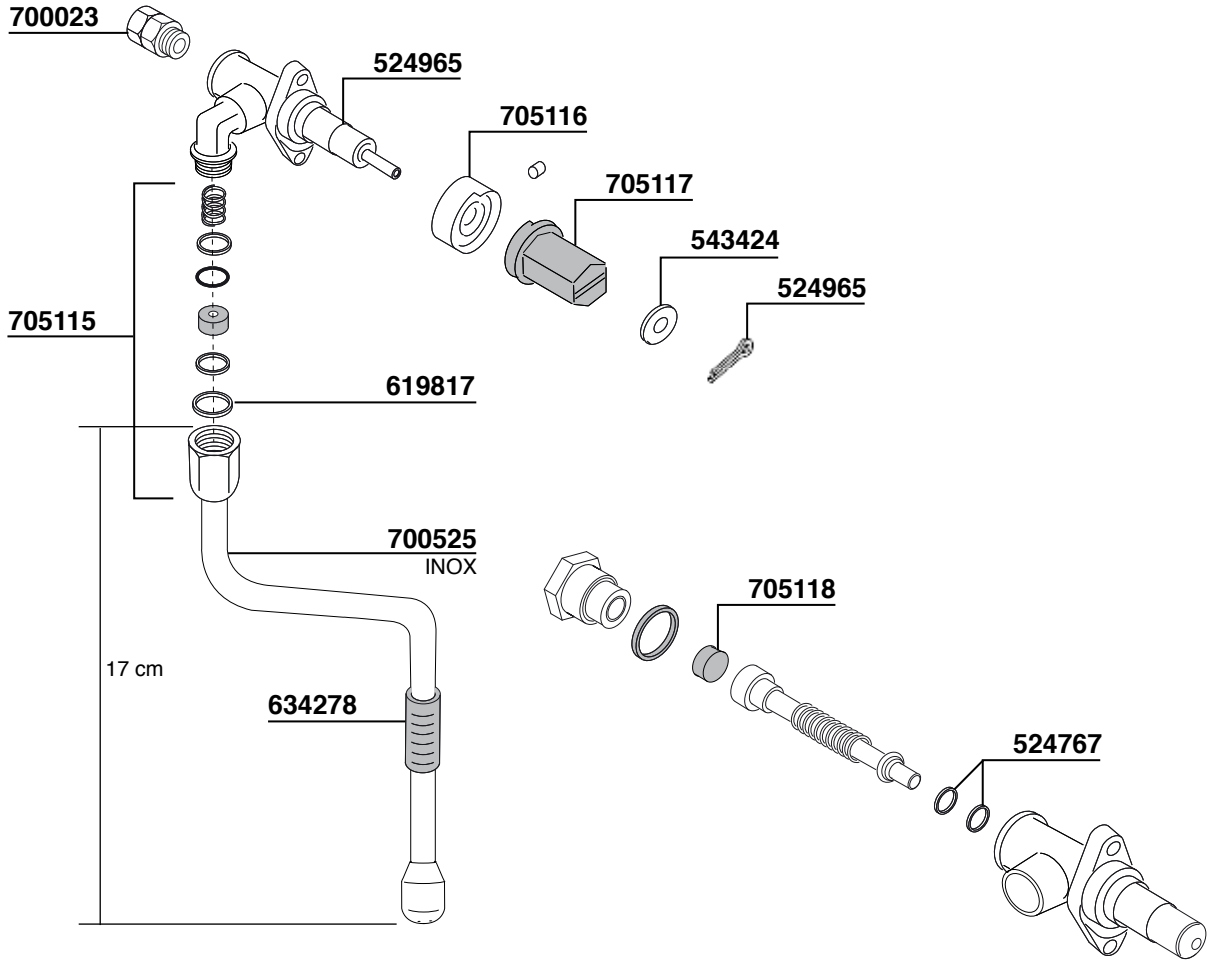

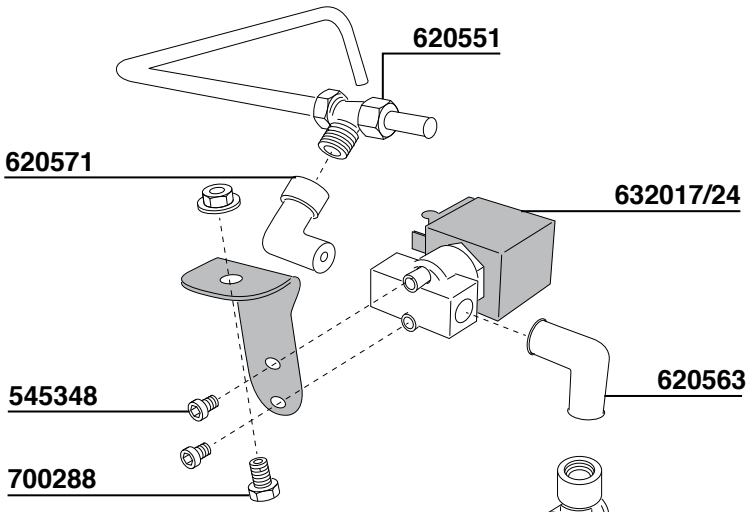

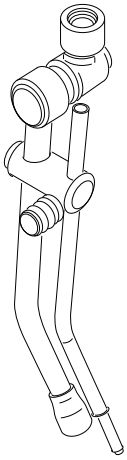

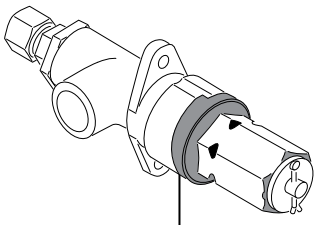

705113 DX
705114 SX

DALLA CORTE

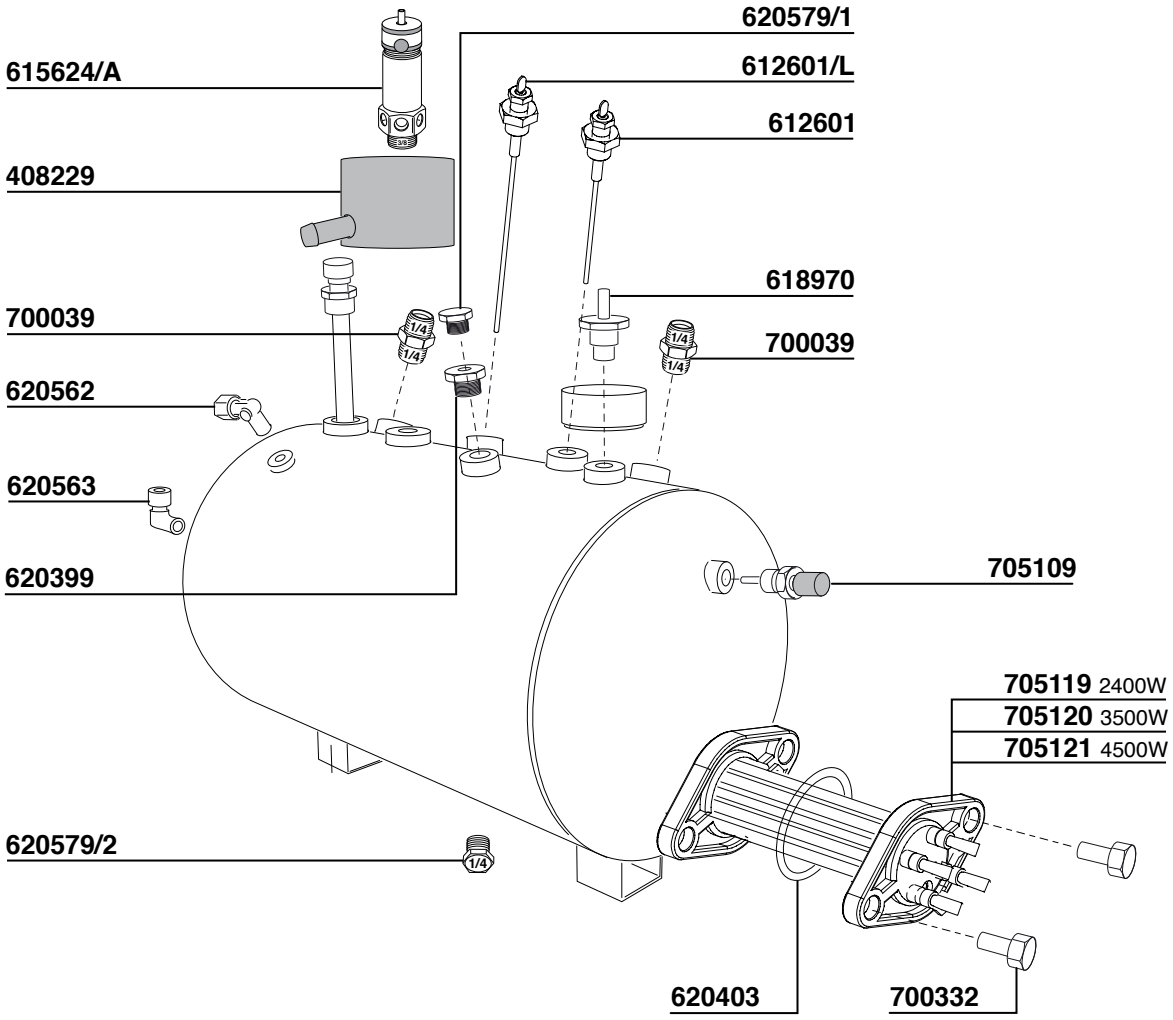
620579/1
615624/A
612601/L
612601
408229
618970
700039
700039
620562
620563
620399
705109
705119 2400W
705120 3500W
705121 4500W
620579/2
620403
700332

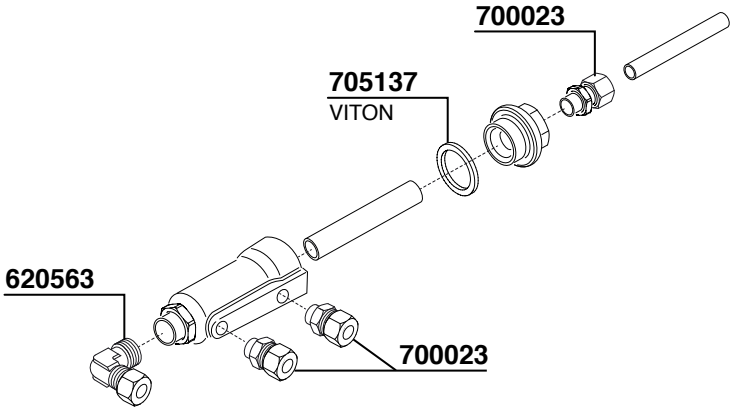
700023
705137
VITON
620563
700023

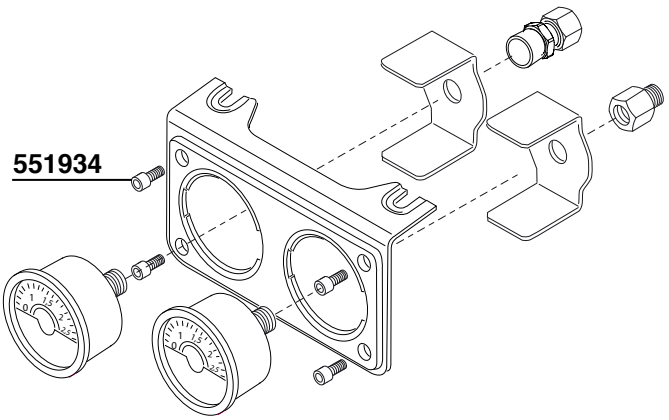
551934

DALLA CORTE

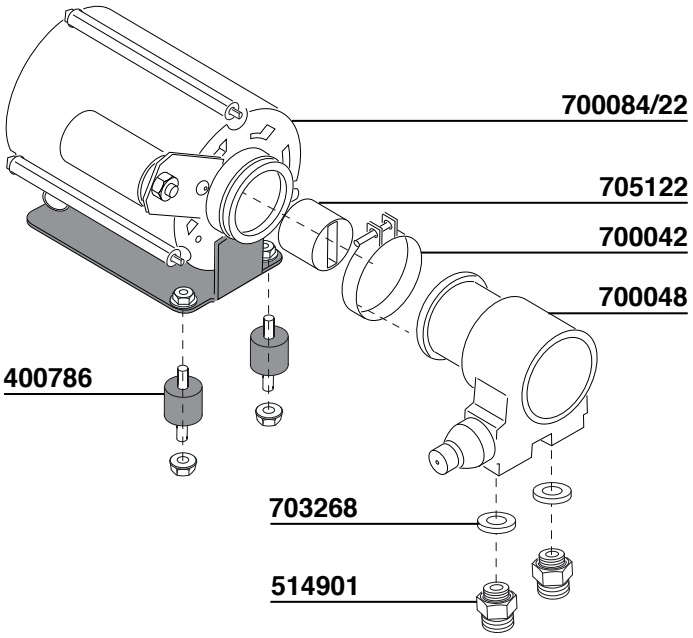
700084/22
705122
700042
700048
400786
703268
514901

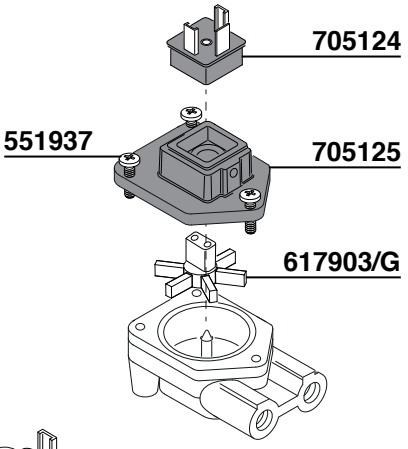
705124
551937
705125
617903/G

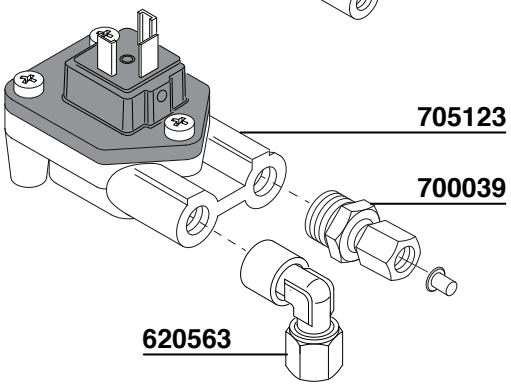
705123
700039
620563

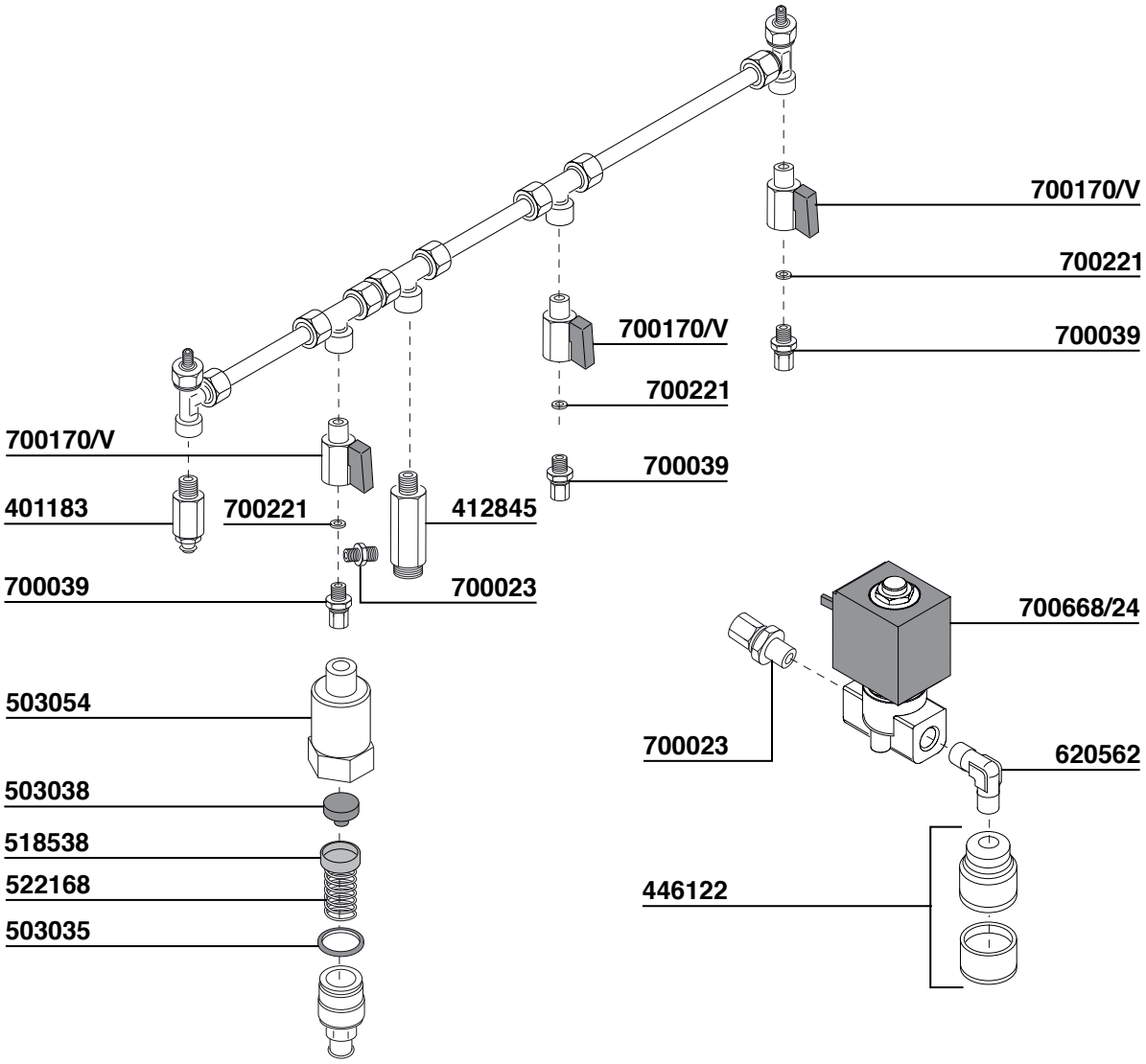
700170/V
700221
700039
700170/V
700221
700039
700170/V
401183
700221
412845
700039
700023
503054
503038
518538
522168
503035
700668/24
700023
620562
446122

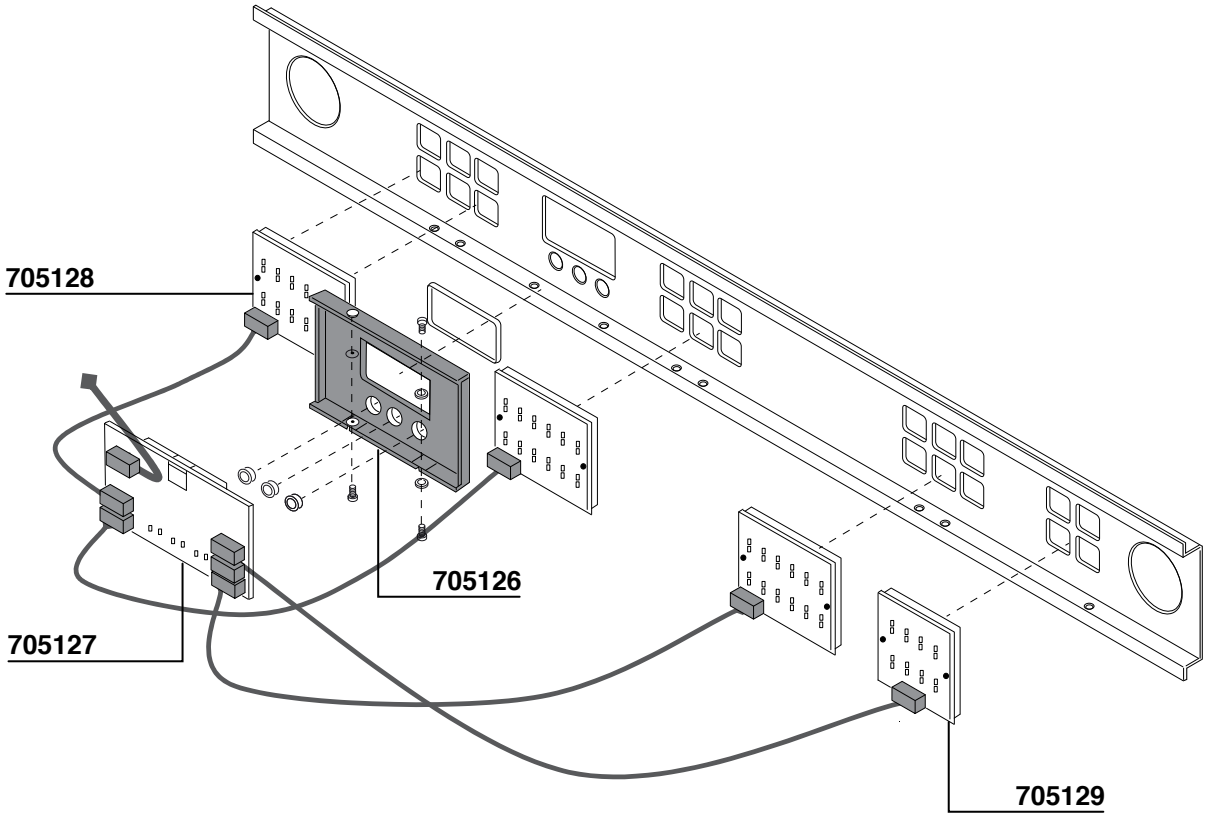
705128
705126
705127
705129

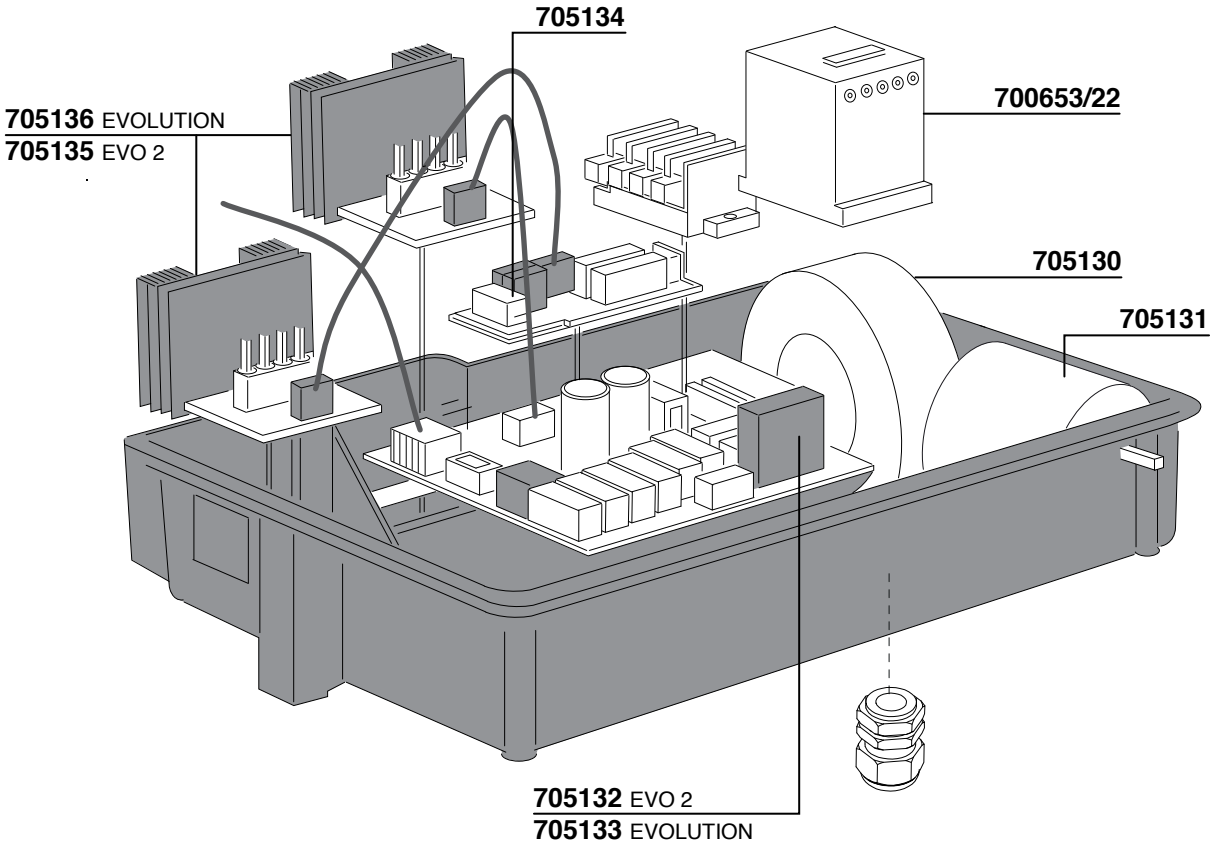
705134
705136 EVOLUTION
705135 EVO 2
700653/22
705130
705131
705132 EVO 2
705133 EVOLUTION

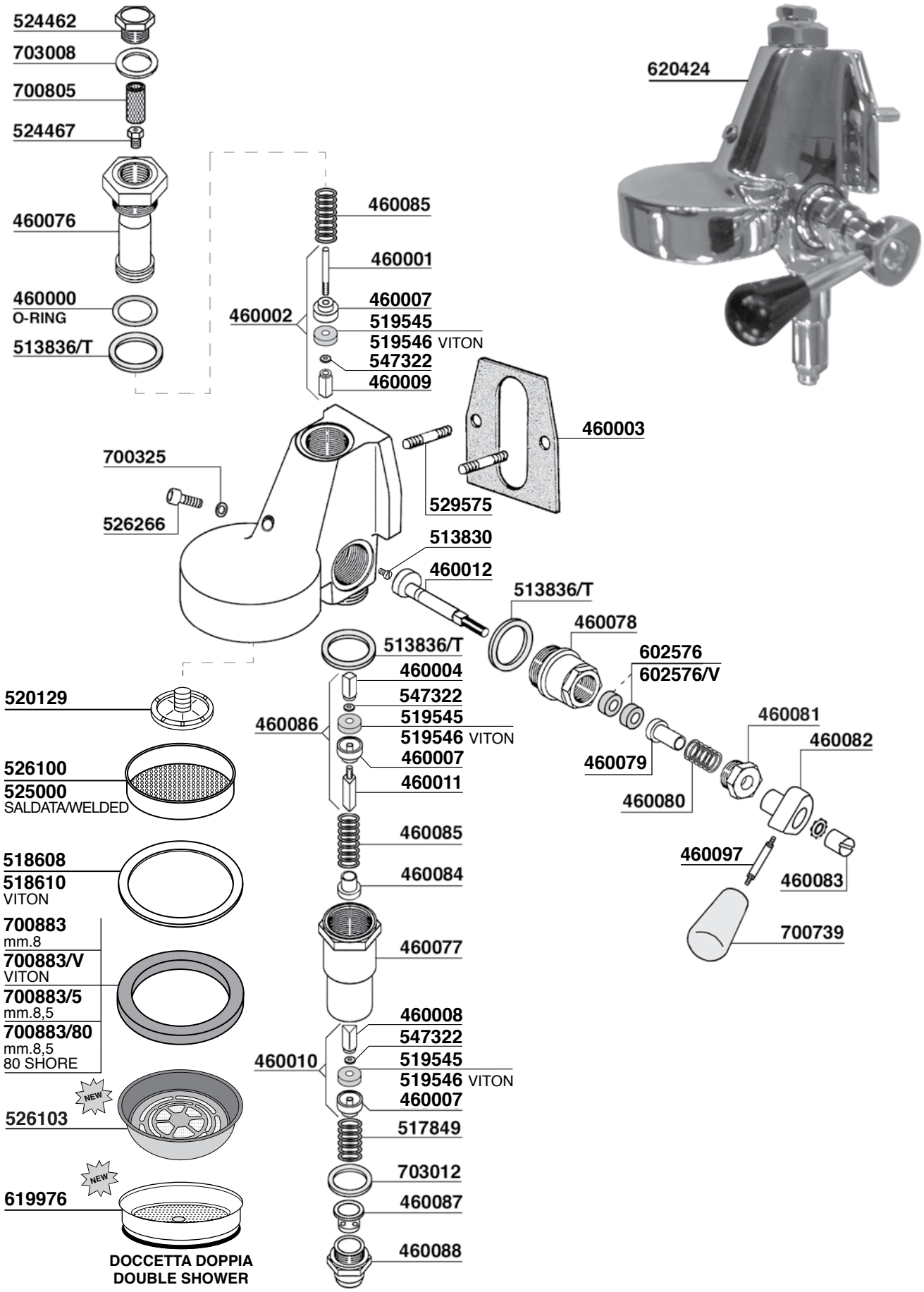
524462
703008
700805
524467
460076
460000
O-RING
513836/T
460085
460001
460002
460007
519545
519546 VITON
547322
460009
620424
460003
700325
526266
529575
513830
460012
513836/T
460078
602576
602576/V
513836/T
460004
547322
460086
519545
519546 VITON
460007
460011
460081
460082
460079
460080
520129
526100
525000
SALDATA/WELDED
460085
460084
460097
460083
518608
518610
VITON
700739
700883
mm.8
700883/V
VITON
700883/5
mm.8,5
700883/80
mm.8,5
80 SHORE
460077
460008
547322
460010
519545
519546 VITON
460007
NEW
526103
517849
703012
NEW
619976
460087
460088
DOCCETTA DOPPIA
DOUBLE SHOWER

E C M

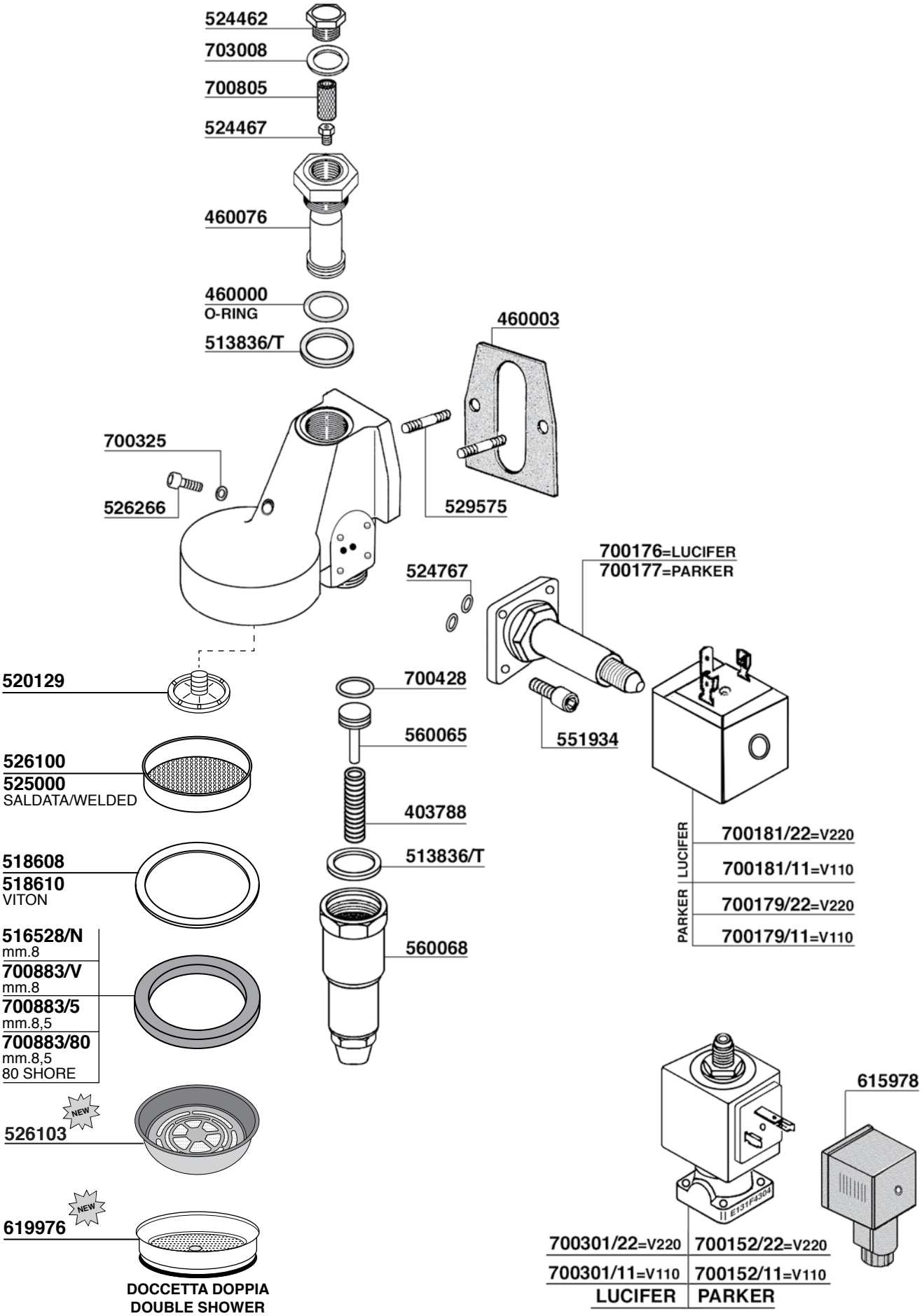
524462
703008
700805
524467
460076
460000
O-RING
513836/T
460003
700325
526266
529575
700176=LUCIFER
700177=PARKER
524767
520129
700428
560065
551934
526100
525000
SALDATA/WELDED
403788
513836/T
518608
518610
VITON
LUCIFER
700181/22=V220
700181/11=V110
PARKER
700179/22=V220
700179/11=V110
560068
516528/N
mm.8
700883/V
mm.8
700883/5
mm.8,5
700883/80
mm.8,5
80 SHORE
NEW
526103
NEW
619976
DOCCETTA DOPPIA
DOUBLE SHOWER
615978
E131F4304
700301/22=V220
700152/22=V220
700301/11=V110
700152/11=V110
LUCIFER
PARKER

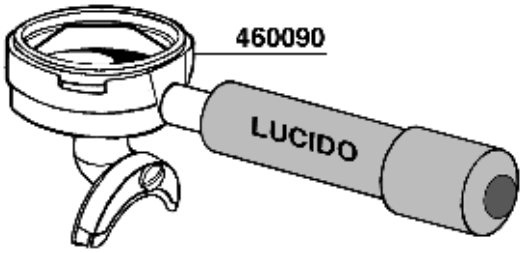
460090
LUCIDO

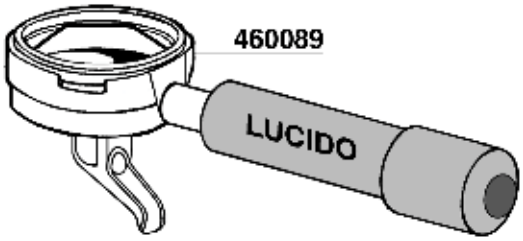
460089
LUCIDO

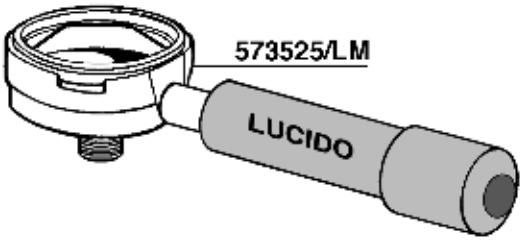
573525/LM
LUCIDO

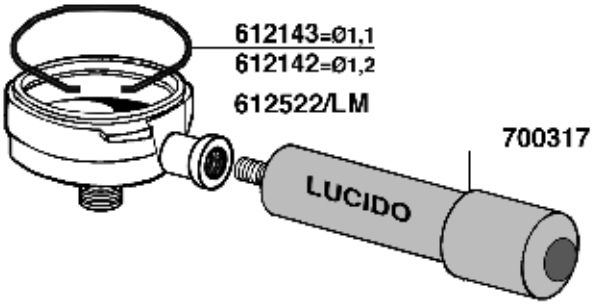
612143=Ø1,1
612142=Ø1,2
612522/LM
700317
LUCIDO

617940
TAPPO CROMATO
CHROME PLUG

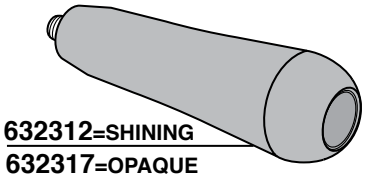
632312=SHINING
632317=OPAQUE

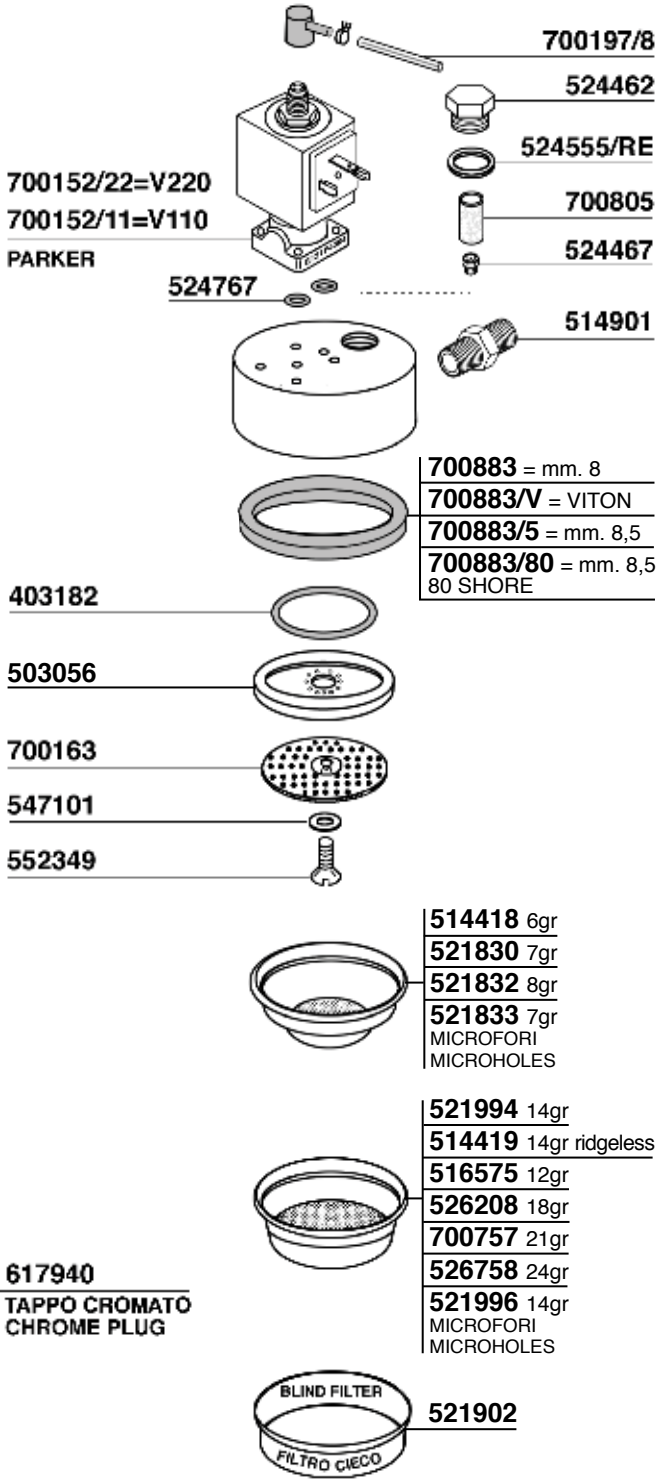
700197/8
524462
524555/RE
700805
524467
700152/22=V220
700152/11=V110
PARKER
524767
514901
700883 = mm. 8
700883/V = VITON
700883/5 = mm. 8,5
700883/80 = mm. 8,5
80 SHORE
403182
503056
700163
547101
552349
514418 6gr
521830 7gr
521832 8gr
521833 7gr
MICROFORI
MICROHOLES
521994 14gr
514419 14gr ridgeless
516575 12gr
526208 18gr
700757 21gr
526758 24gr
521996 14gr
MICROFORI
MICROHOLES
BLIND FILTER
FILTRO CIECO
521902

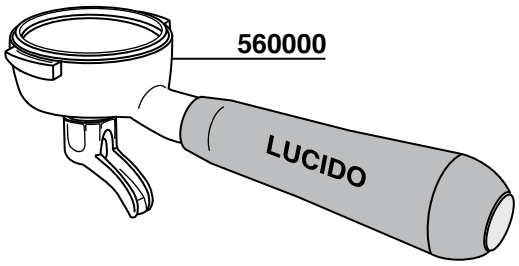
560000
LUCIDO

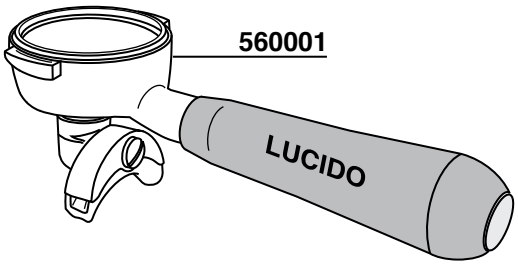
560001
LUCIDO

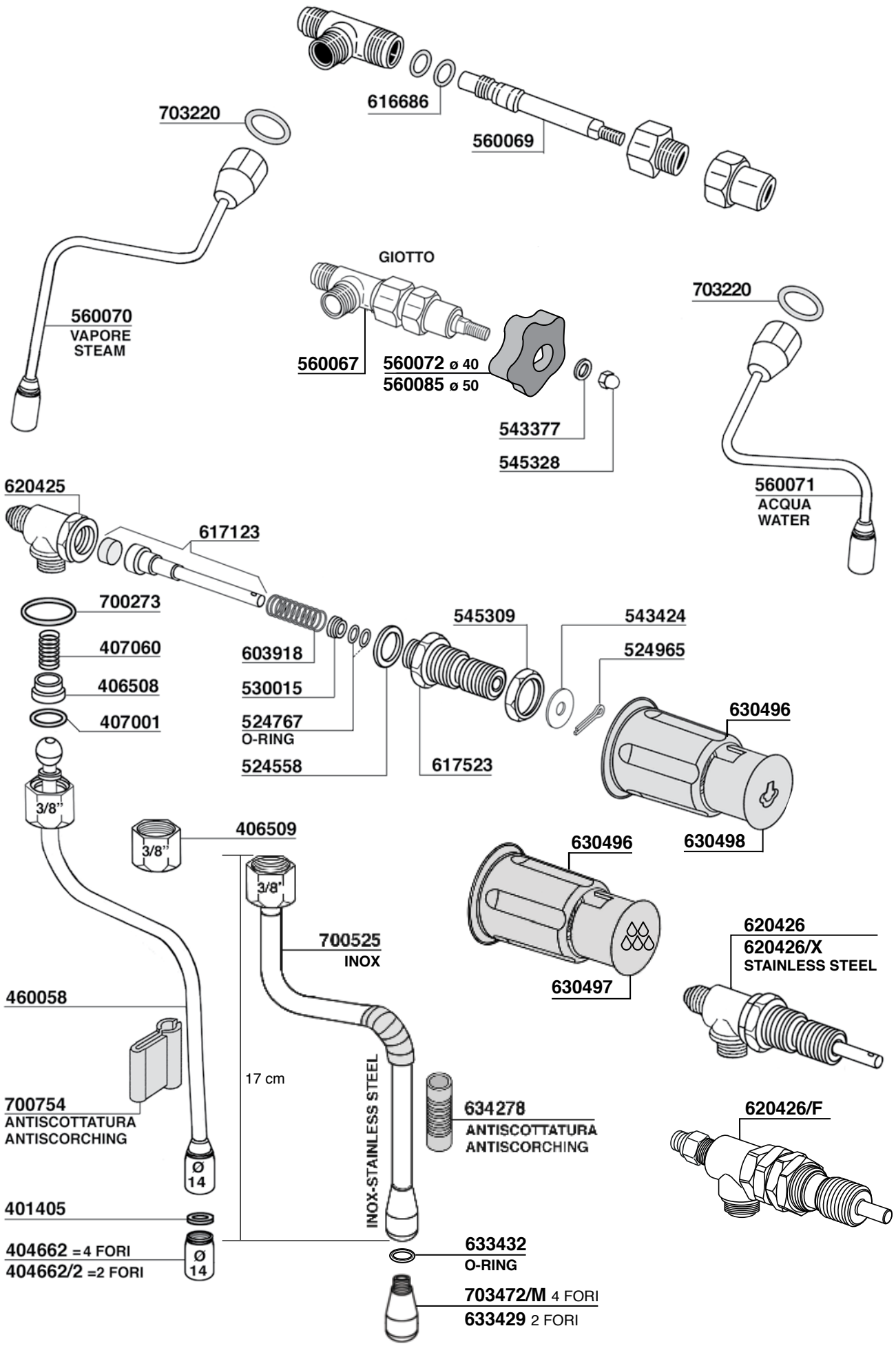
616686
560069
703220
560070
VAPORE
STEAM
GIOTTO
560067
560072 ø 40
560085 ø 50
543377
545328
703220
560071
ACQUA
WATER
620425
617123
700273
407060
406508
407001
603918
530015
524767
O-RING
524558
545309
543424
524965
617523
630496
630498
3/8"
406509
3/8"
3/8"
630496
630497
700525
INOX
620426
620426/X
STAINLESS STEEL
460058
17 cm
INOX-STAINLESS STEEL
634278
ANTISCOTTATURA
ANTISCORCHING
620426/F
700754
ANTISCOTTATURA
ANTISCORCHING
Ø 14
401405
404662 =4 FORI
404662/2 =2 FORI
Ø 14
633432
O-RING
703472/M 4 FORI
633429 2 FORI

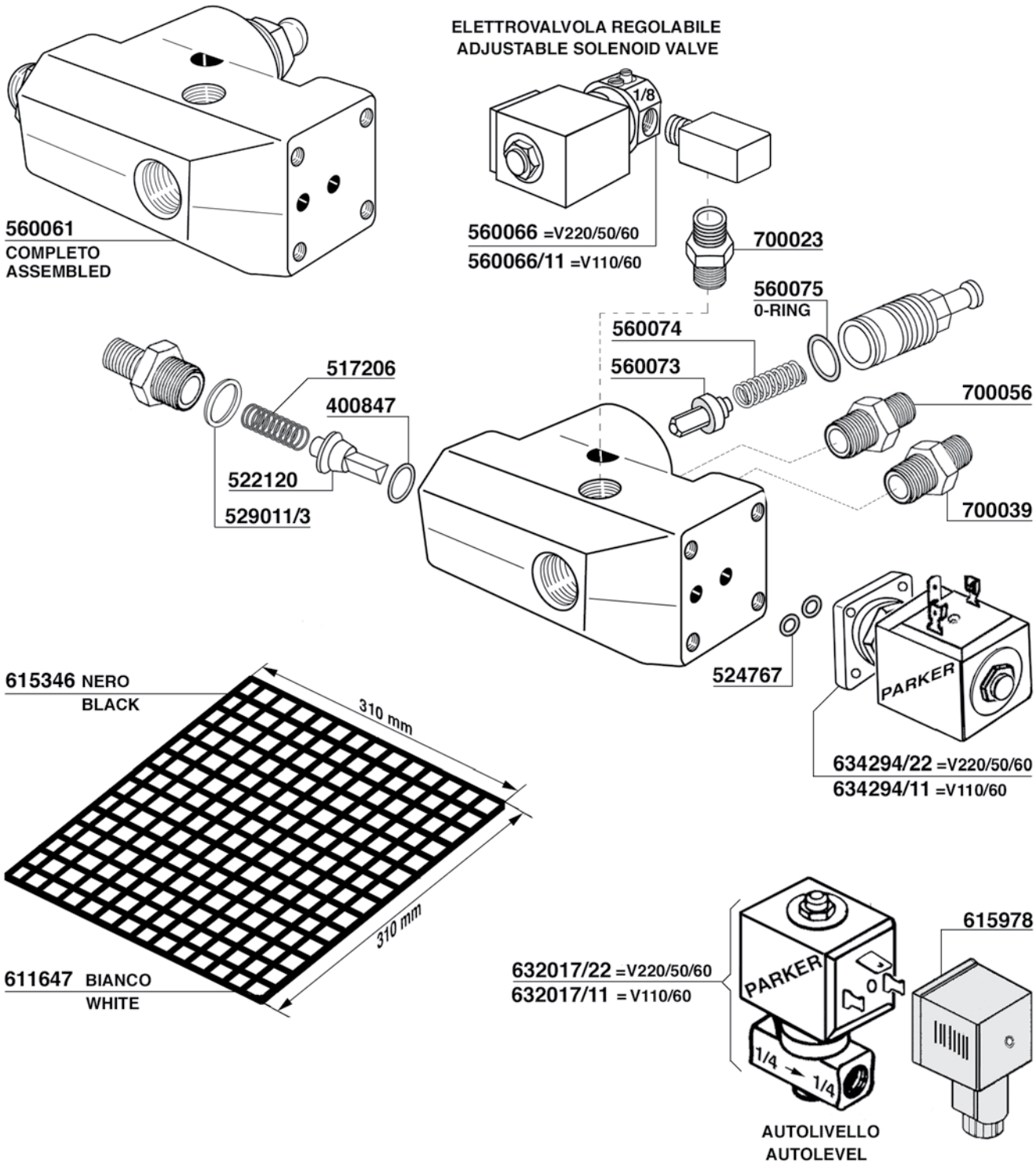

TUBO SCARICO - DRAIN HOSES
PLASTICA NERO - BLACK PLASTIC

560060 = Ø20x24

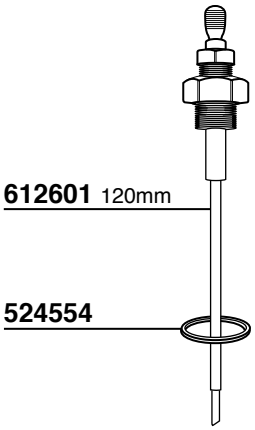

TUBI INOX - STAINLESS STEEL HOSES
BAR 12 - t.90°

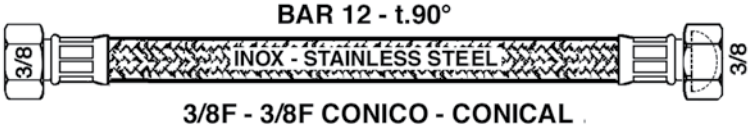

3/8F - 3/8F CONICO - CONICAL

700182= cm.50

700184/S= cm.150

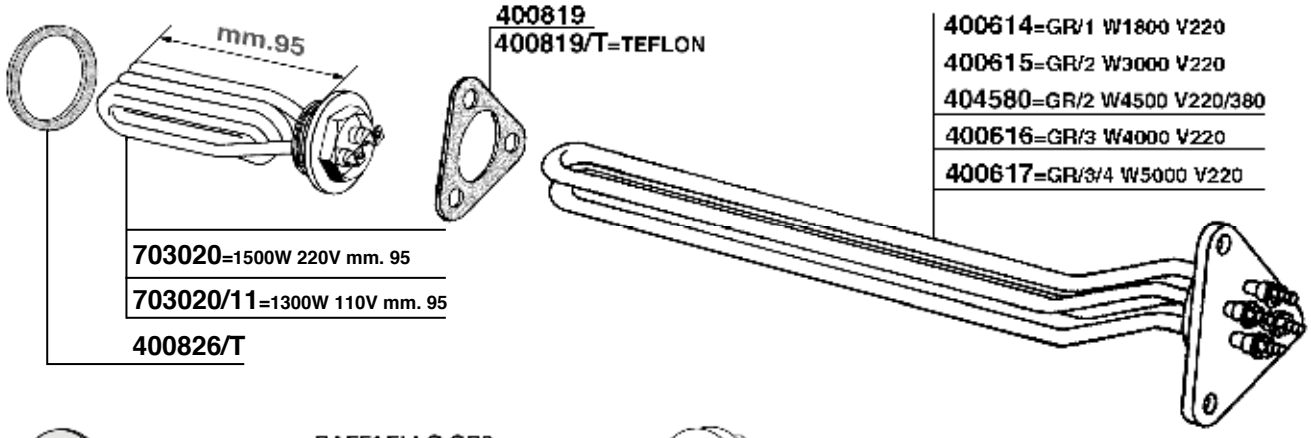

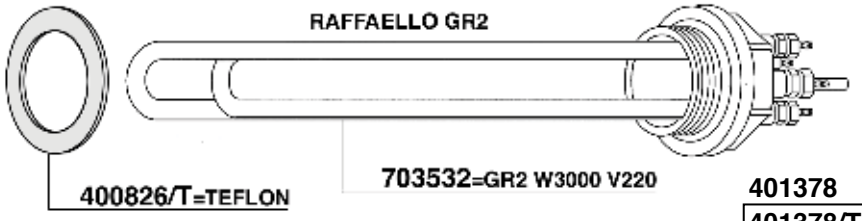

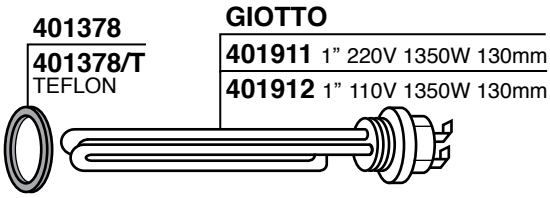

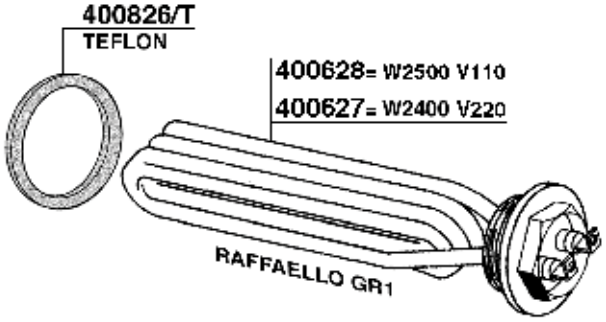

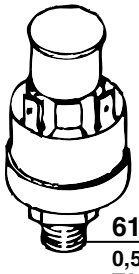

619295
0,5 - 1,8 BAR
TAR. 1,2 BAR

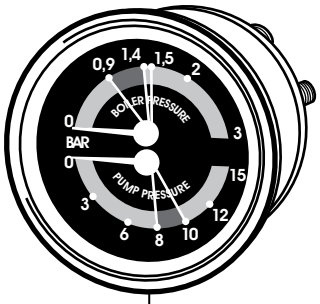

560076

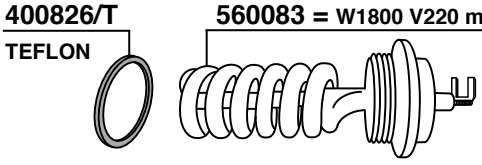

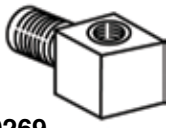

700269
O-RING

400088

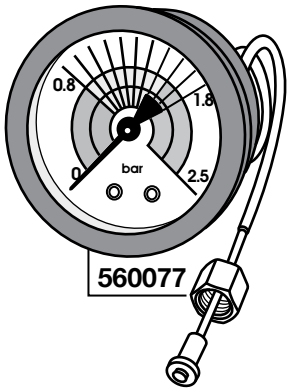

560077

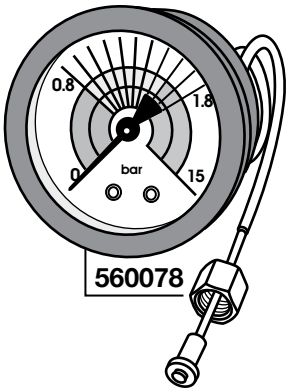

560078

703221
Ø11x155mm

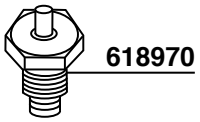

618970

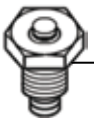

618968

524554

700750

524554

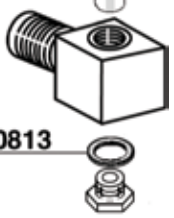

400813

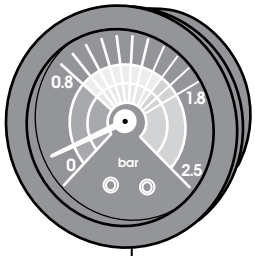

700619
BOILER

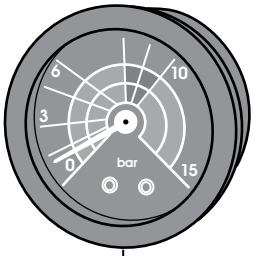

700620
PUMP

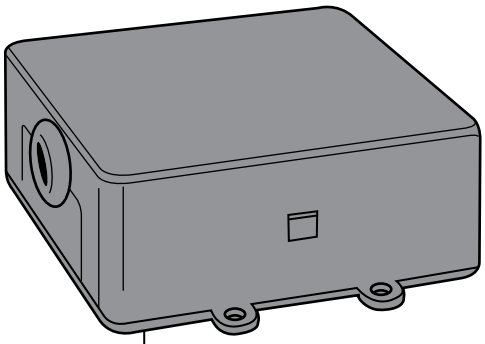

560063
CENTRALINA GR2/3 V230/50/60
GICAR CODE 9.5.2202G 07

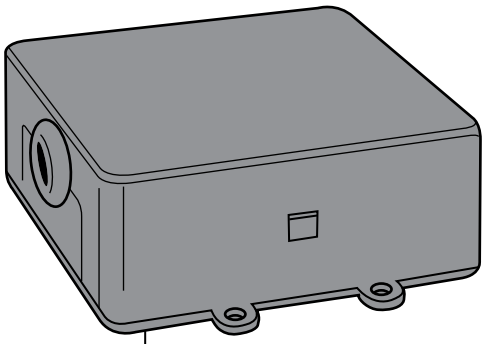

560079
CENTRALINA GR2/3 V230/50/60
GICAR CODE 9.5.25.20G 00

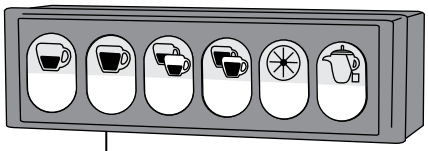

560084

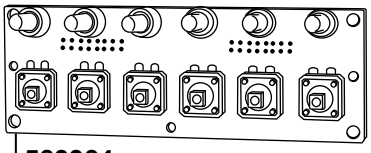

560064
PULSANTIERA VENEZIANO GR2/3

8 PIN DOPPI
8 DOUBLE PINS

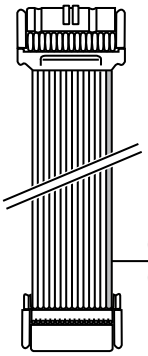

620707 800 mm
620716 1000 mm

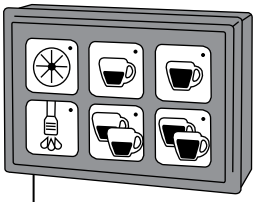

620705
GICAR CODE 9.9.09.28

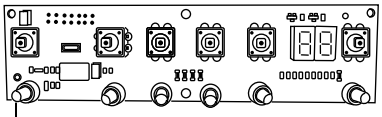

620735

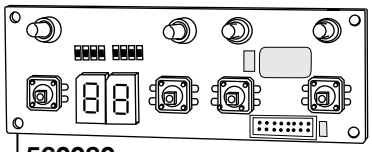

560080
PULSANTIERA P4
CROMO MICHELANGELO

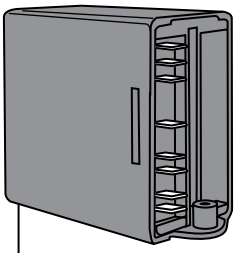

CENTRALINA AUTOLIVELLO
AUTOFILL ELECTRONIC BOX
560062/11 110V
GICAR CODE 9.9.04.77G

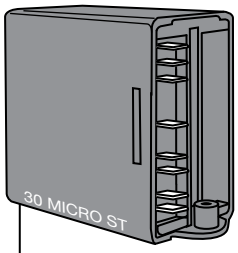

560081 110V
GICAR CODE 9.1.04.57G
560082 230/240V - 50/60 Hz
GICAR CODE 9.1.40.56G

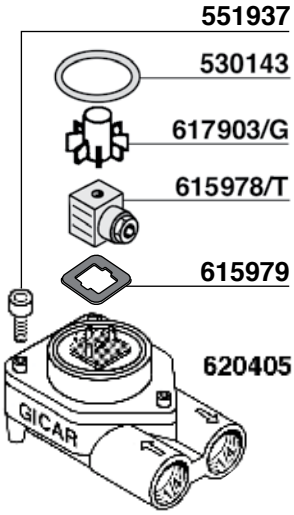

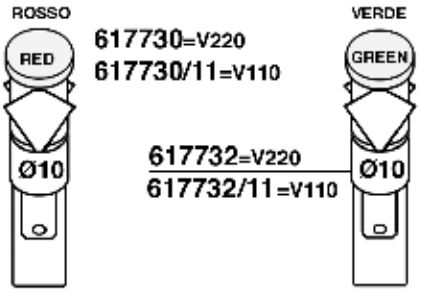

617730=V220
617730/11=V110

617732=V220
617732/11=V110

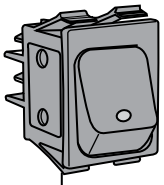

579671
NERO/BLACK

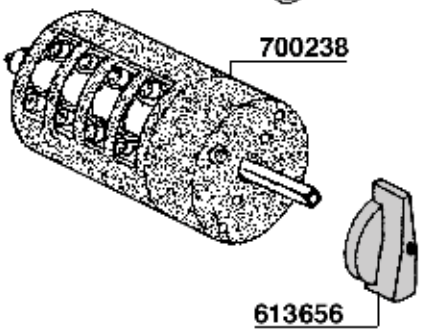

ELEKTRA

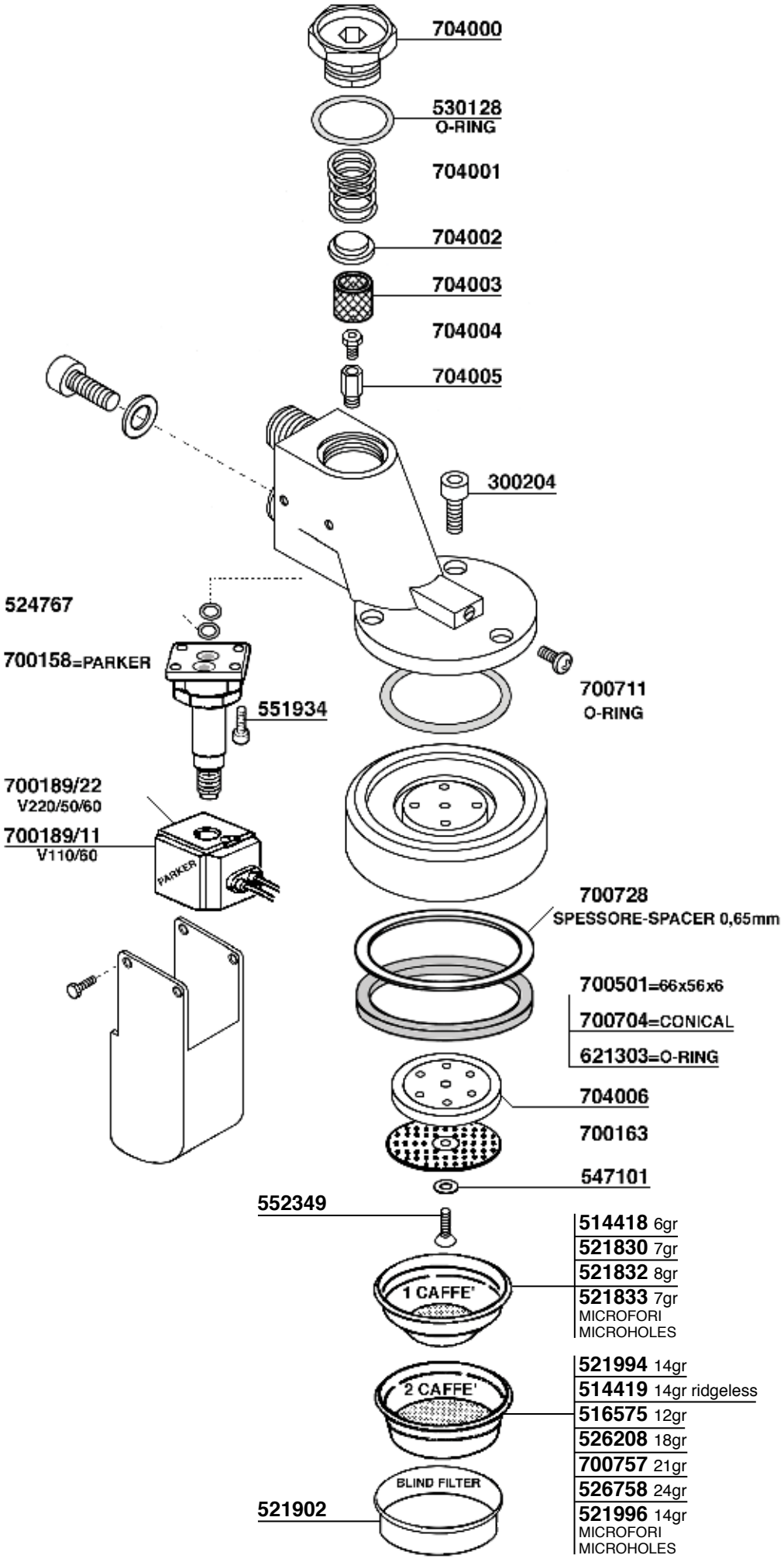
704000
530128
O-RING
704001
704002
704003
704004
704005
300204
524767
700158=PARKER
551934
700711
O-RING
700189/22
V220/50/60
700189/11
V110/60
PARKER
700728
SPESSORE-SPACER 0,65mm
700501=66x56x6
700704=CONICAL
621303=O-RING
704006
700163
547101
552349
514418 6gr
521830 7gr
521832 8gr
1 CAFFE'
521833 7gr
MICROFORI
MICROHOLES
521994 14gr
514419 14gr ridgeless
2 CAFFE'
516575 12gr
526208 18gr
700757 21gr
526758 24gr
BLIND FILTER
521902
521996 14gr
MICROFORI
MICROHOLES

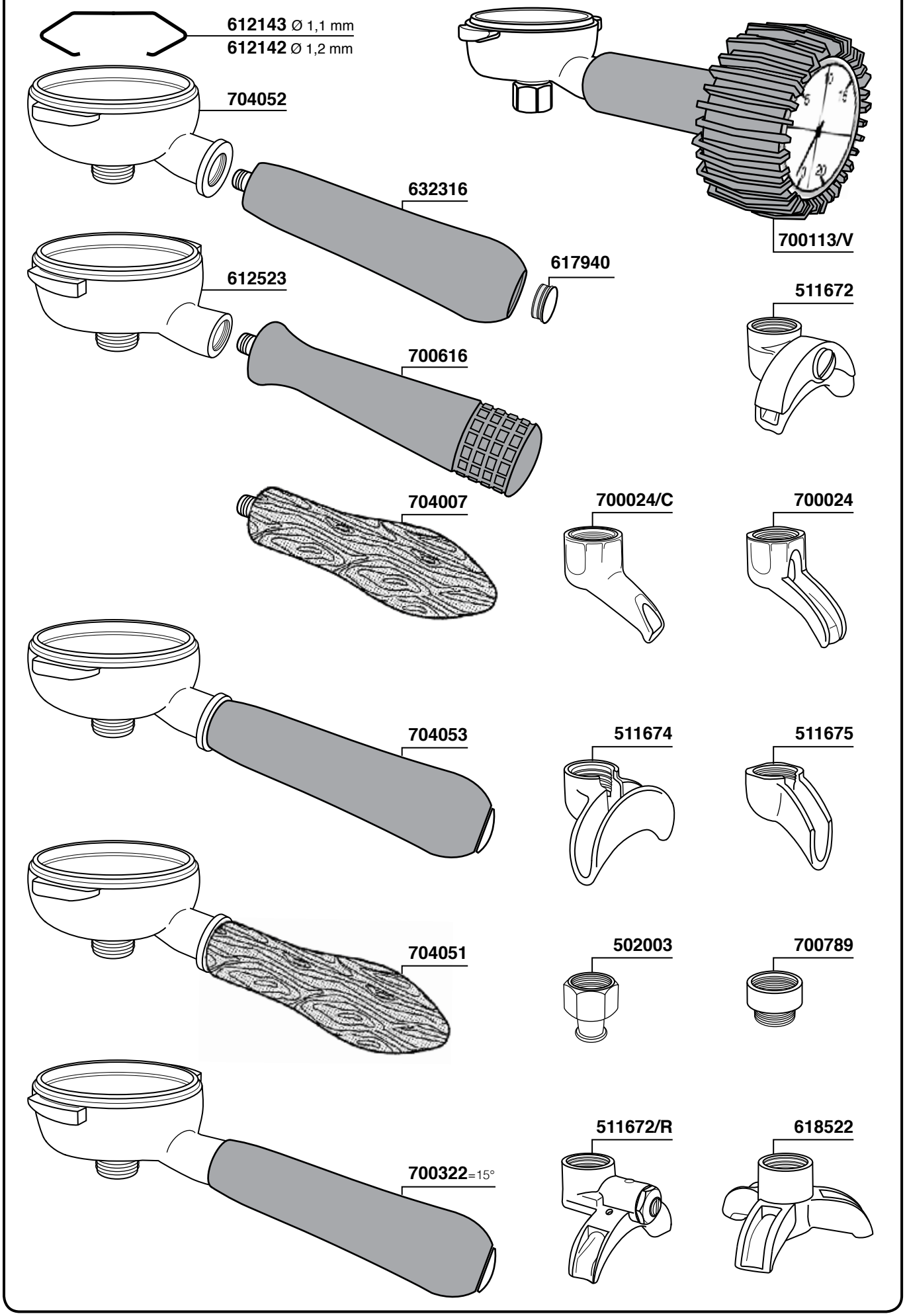
612143 Ø 1,1 mm
612142 Ø 1,2 mm
704052
632316
617940
700113/V
612523
511672
700616
704007
700024/C
700024
704053
511674
511675
704051
502003
700789
700322=15°
511672/R
618522

ELEKTRA

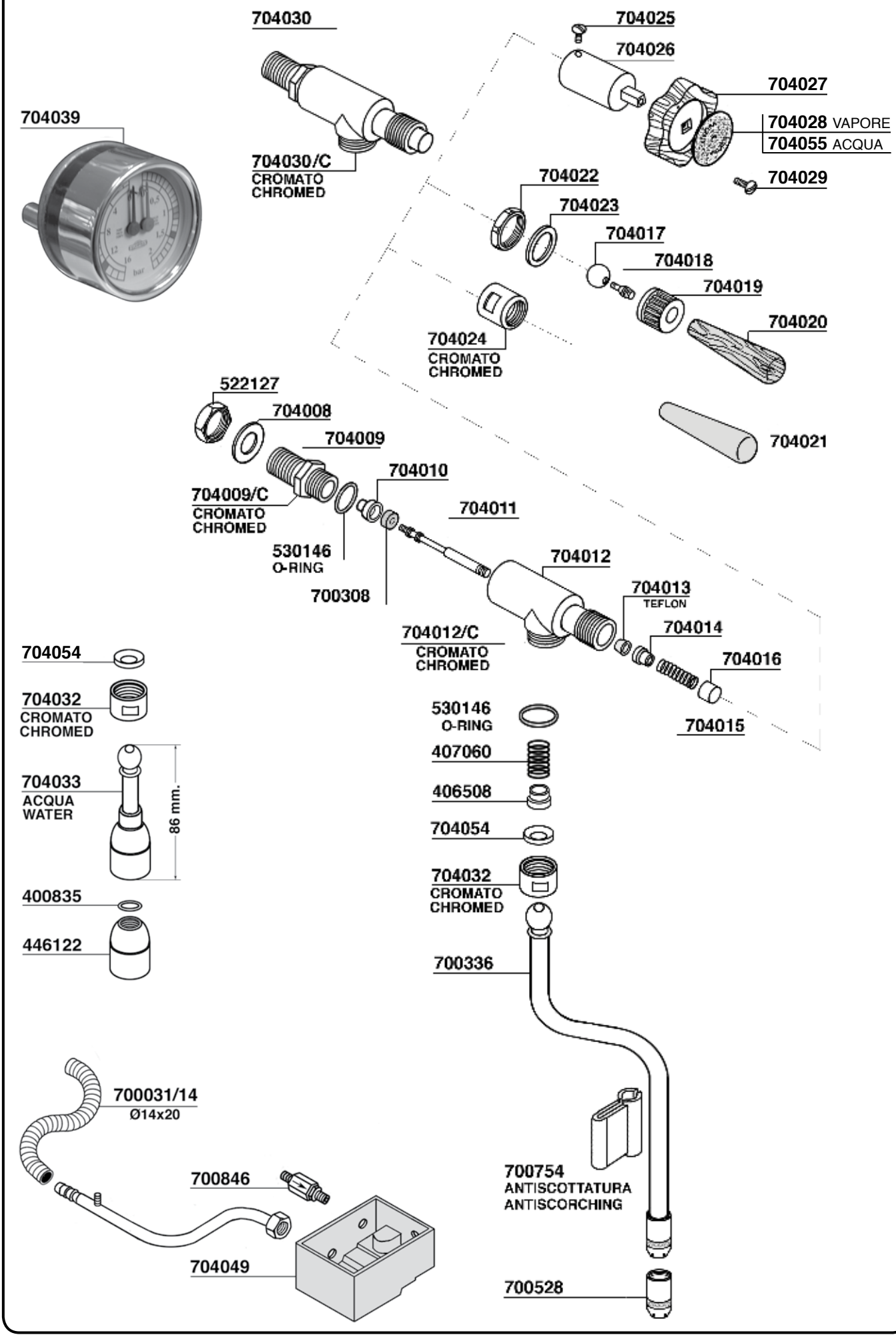
704030
704030/C
CROMATO
CHROMED
704039
704025
704026
704027
704028 VAPORE
704055 ACQUA
704029
704022
704023
704017
704018
704019
704020
704024
CROMATO
CHROMED
704021
522127
704008
704009
704009/C
CROMATO
CHROMED
704010
704011
530146
O-RING
700308
704012
704013
TEFLON
704014
704016
704015
704012/C
CROMATO
CHROMED
704054
704032
CROMATO
CHROMED
704033
ACQUA
WATER
86 mm.
400835
446122
530146
O-RING
407060
406508
704054
704032
CROMATO
CHROMED
700336
700031/14
Ø14x20
700846
704049
700754
ANTISCOTTATURA
ANTISCORCHING
700528

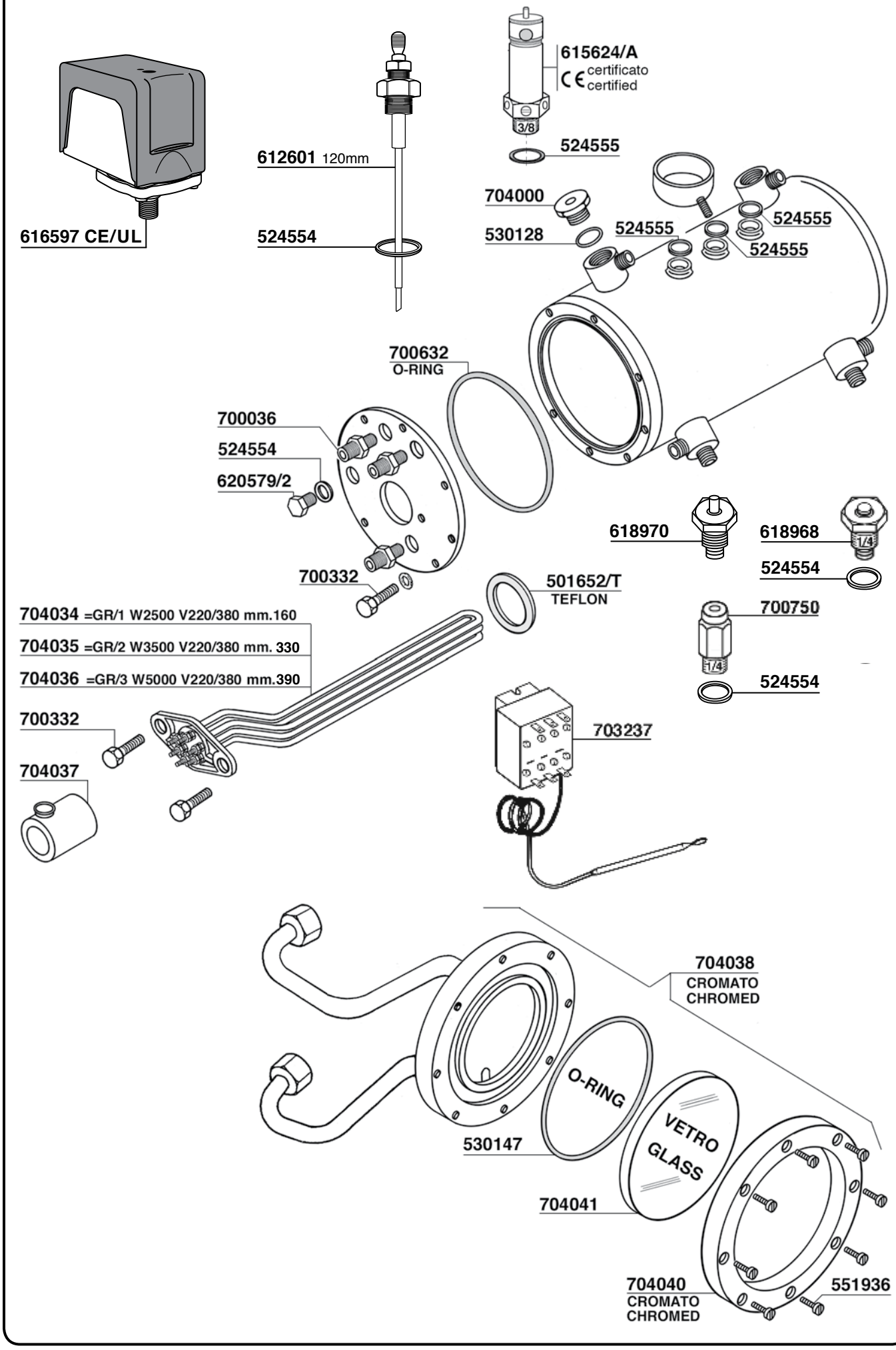
616597 CE/UL
612601 120mm
524554
615624/A
certificato
certified
3/8
524555
704000
530128
524555
524555
524555
700632
O-RING
700036
524554
620579/2
618970
618968
1/4
524554
700332
501652/T
TEFLON
704034 =GR/1 W2500 V220/380 mm.160
704035 =GR/2 W3500 V220/380 mm. 330
704036 =GR/3 W5000 V220/380 mm.390
700750
1/4
524554
700332
703237
704037
704038
CROMATO
CHROMED
O-RING
530147
VETRO
GLASS
704041
704040
CROMATO
CHROMED
551936

ELEKTRA

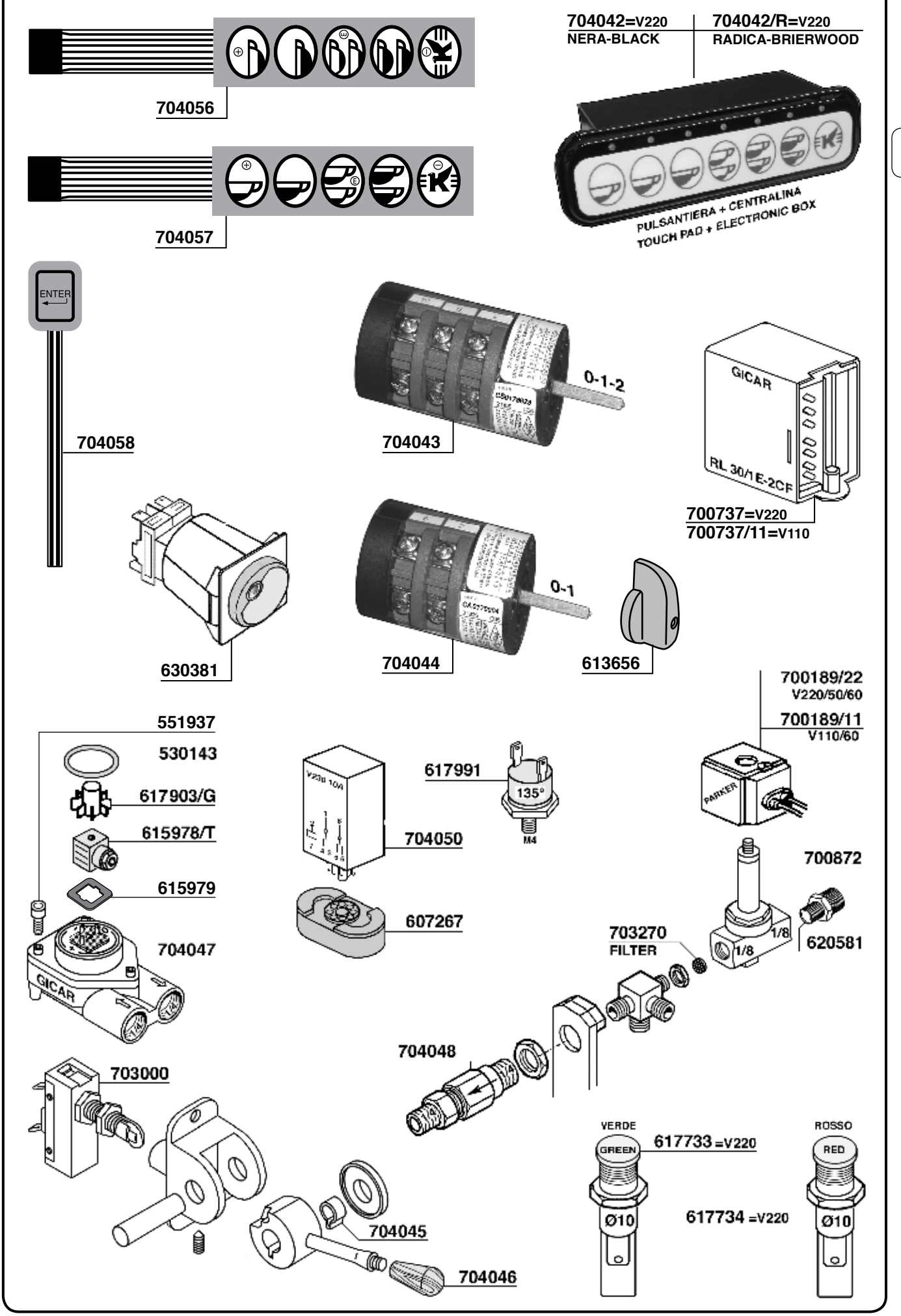
704042=V220
NERA-BLACK
704042/R=V220
RADICA-BRIERWOOD
704056
704057
PULSANTIERA + CENTRALINA
TOUCH PAD + ELECTRONIC BOX
ENTER
704058
704043
0-1-2
GICAR
RL 30/1 E-2CF
700737=V220
700737/11=V110
630381
704044
0-1
613656
700189/22
V220/50/60
700189/11
V110/60
PARKER
551937
530143
617903/G
615978/T
615979
704047
GICAR
617991
135°
M4
704050
607267
700872
703270
FILTER
1/8
1/8
620581
704048
703000
704045
704046
VERDE
GREEN
617733 =V220
Ø10
617734 =V220
ROSSO
RED
Ø10

EXPOBAR

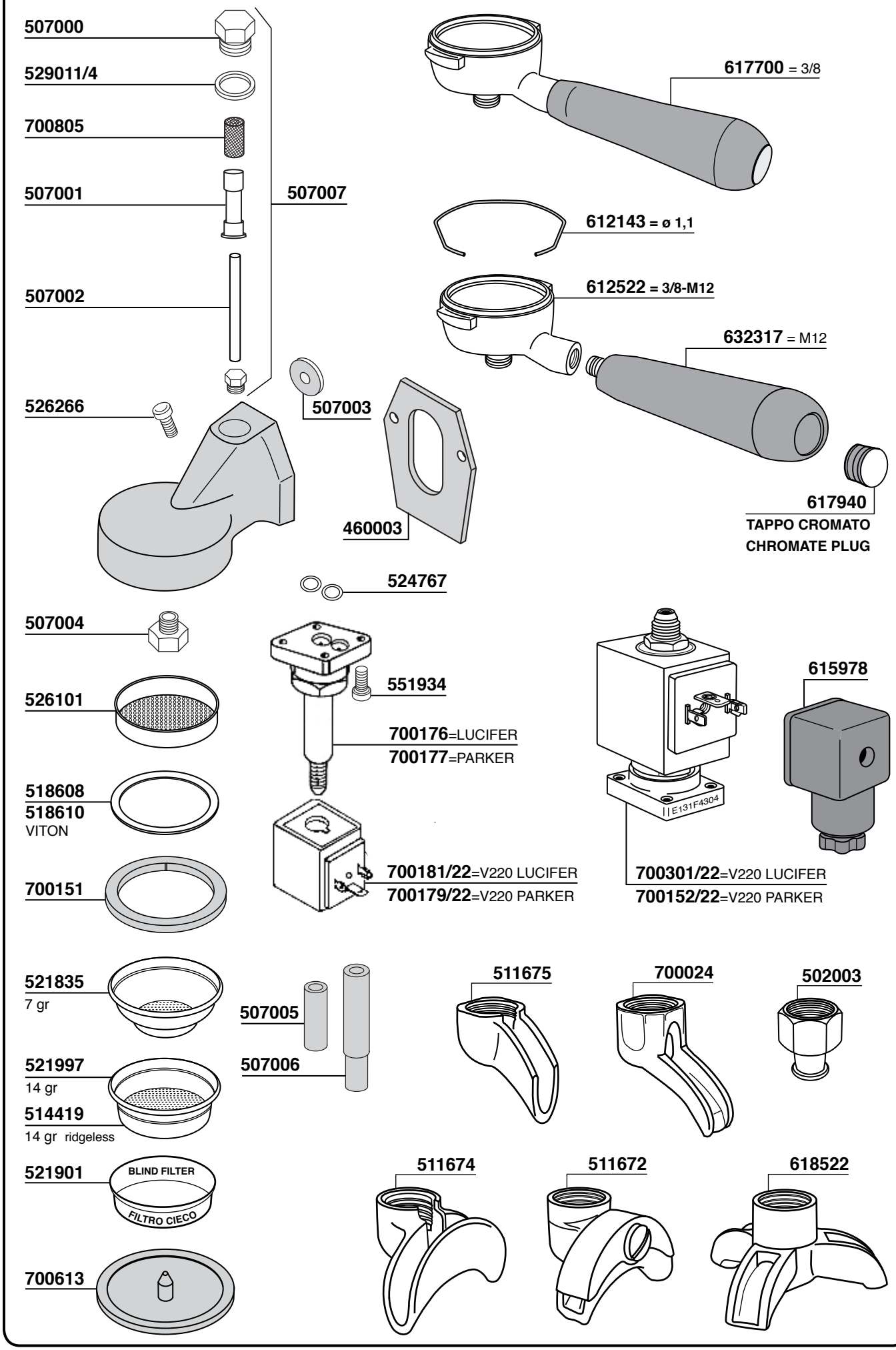
507000
529011/4
700805
507001
507007
507002
526266
507003
460003
617700 = 3/8
612143 = ø 1,1
612522 = 3/8-M12
632317 = M12
617940
TAPPO CROMATO
CHROMATE PLUG
524767
507004
526101
518608
518610
VITON
700151
551934
700176=LUCIFER
700177=PARKER
700181/22=V220 LUCIFER
700179/22=V220 PARKER
E131F4304
615978
700301/22=V220 LUCIFER
700152/22=V220 PARKER
521835
7 gr
521997
14 gr
514419
14 gr ridgeless
507005
507006
511675
700024
502003
521901
BLIND FILTER
FILTRO CIECO
700613
511674
511672
618522

EXPOBAR

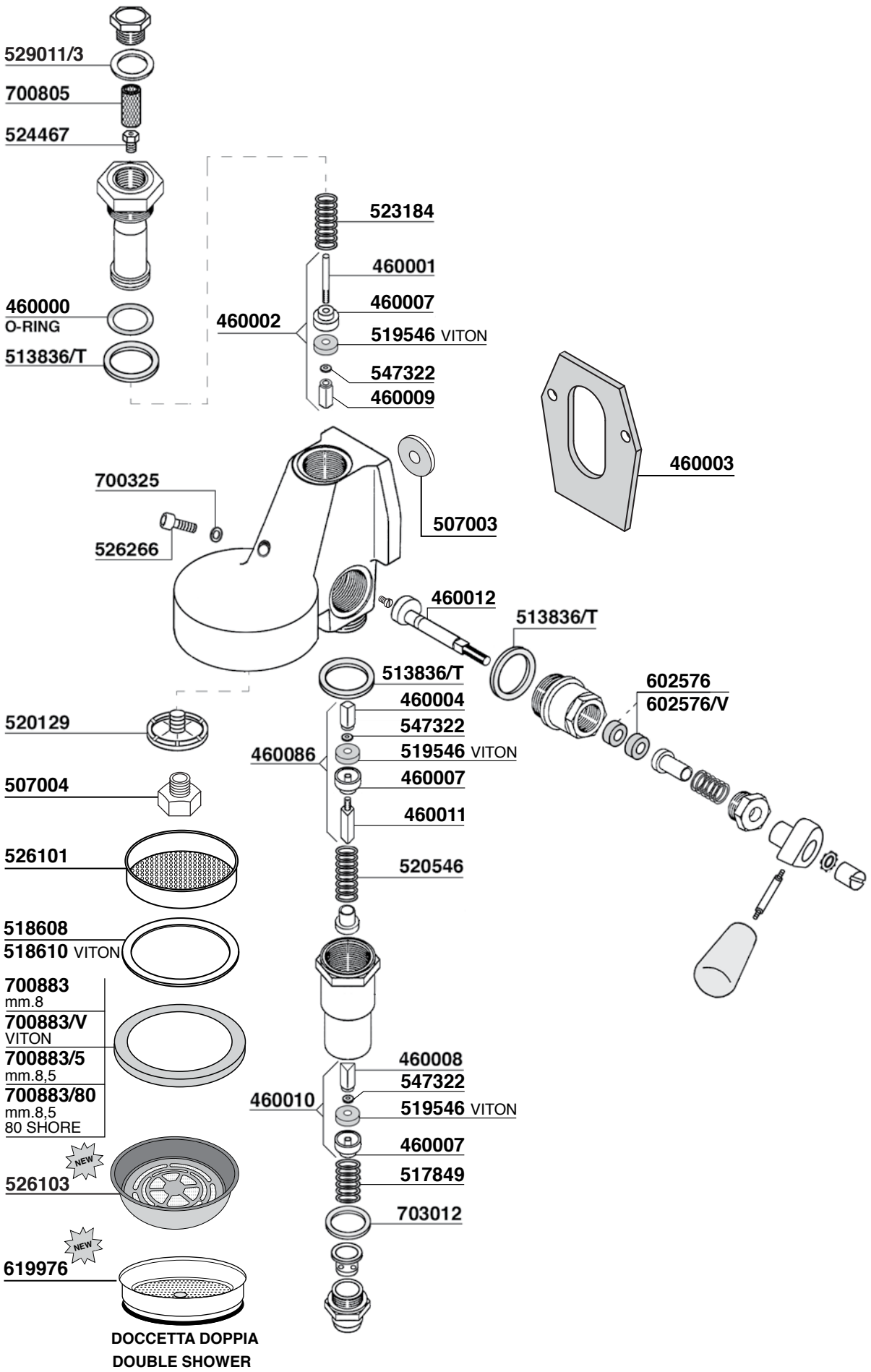
529011/3
700805
524467
460000
O-RING
513836/T
523184
460001
460007
460002
519546 VITON
547322
460009
460003
700325
526266
507003
460012
513836/T
513836/T
460004
547322
460086
519546 VITON
460007
460011
602576
602576/V
520129
507004
526101
520546
518608
518610 VITON
700883
mm.8
700883/V
VITON
700883/5
mm.8,5
700883/80
mm.8,5
80 SHORE
460008
547322
460010
519546 VITON
460007
517849
703012
NEW
526103
NEW
619976
DOCCETTA DOPPIA
DOUBLE SHOWER

EXPOBAR

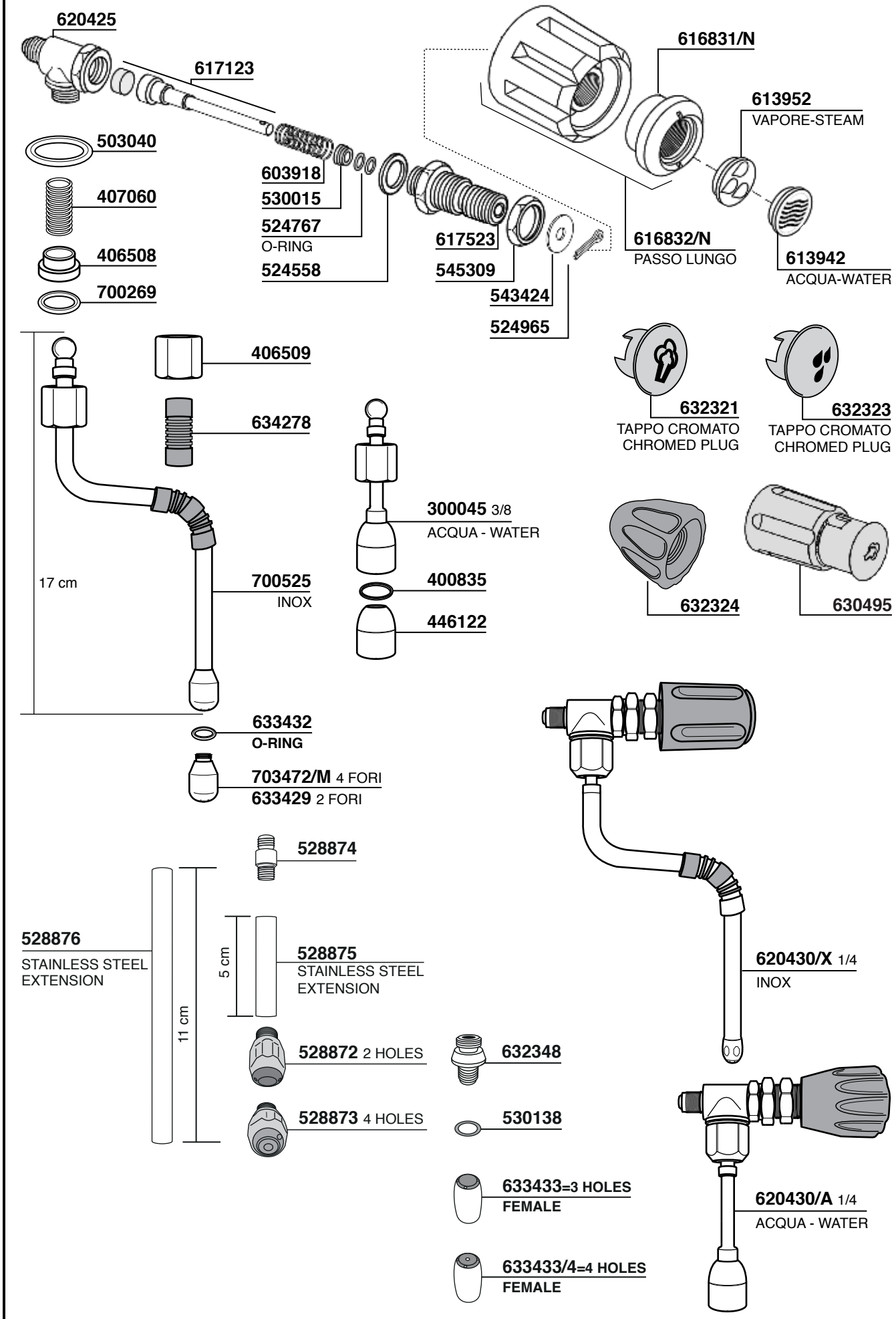
620425
617123
503040
407060
406508
700269
603918
530015
524767
O-RING
524558
617523
545309
543424
524965
616831/N
613952
VAPORE-STEAM
616832/N
PASSO LUNGO
613942
ACQUA-WATER
406509
634278
632321
TAPPO CROMATO
CHROMED PLUG
632323
TAPPO CROMATO
CHROMED PLUG
300045 3/8
ACQUA - WATER
17 cm
700525
INOX
400835
446122
632324
630495
633432
O-RING
703472/M 4 FORI
633429 2 FORI
528874
528876
STAINLESS STEEL
EXTENSION
5 cm
528875
STAINLESS STEEL
EXTENSION
11 cm
620430/X 1/4
INOX
528872 2 HOLES
632348
528873 4 HOLES
530138
633433=3 HOLES
FEMALE
633433/4=4 HOLES
FEMALE
620430/A 1/4
ACQUA - WATER

EXPOBAR

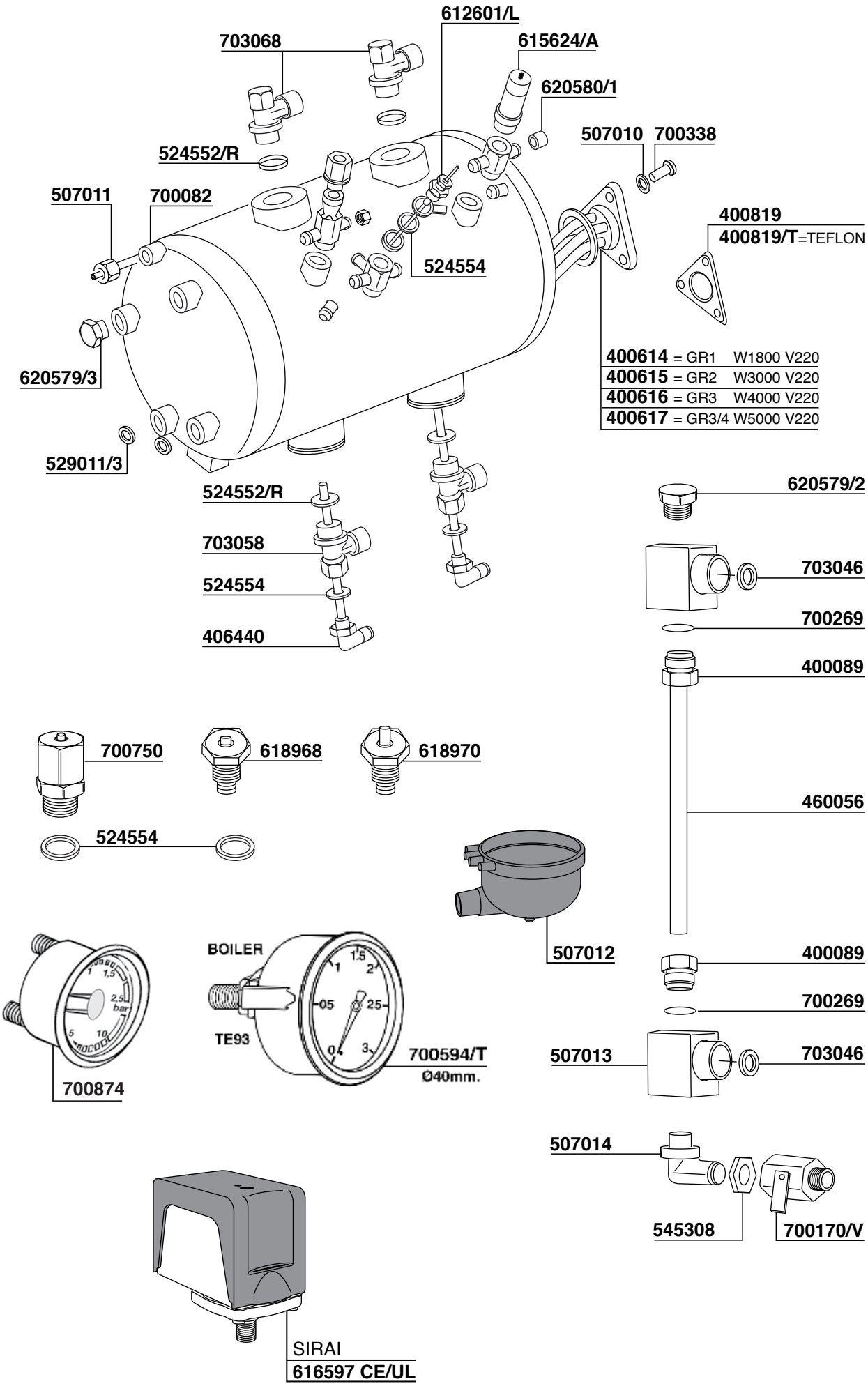
612601/L
703068
615624/A
620580/1
507010
700338
524552/R
507011
700082
400819
400819/T=TEFLON
524554
400614 = GR1 W1800 V220
400615 = GR2 W3000 V220
400616 = GR3 W4000 V220
400617 = GR3/4 W5000 V220
620579/3
529011/3
620579/2
524552/R
703058
703046
524554
700269
406440
400089
700750
618968
618970
460056
524554
507012
400089
BOILER
700269
TE93
700594/T
Ø40mm.
507013
703046
700874
507014
545308
700170/V
SIRAI
616597 CE/UL

EXPOBAR

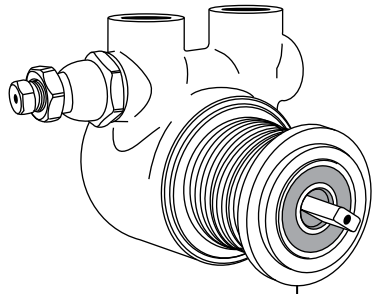

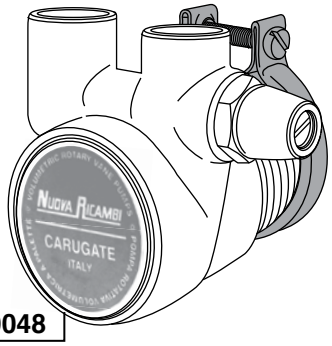

620406
ROTOFLOW 150 Lt/h
620406/X INOX

700048
100 Lt/h

621347
CAPACITOR CONDENSAT. 10 µF

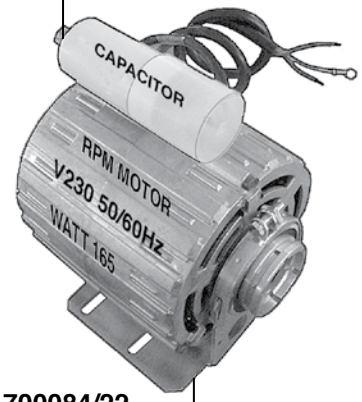

700084/22
V220/50/60 W165

620405/C

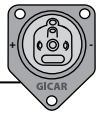

700011/E

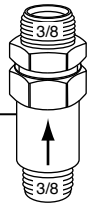

615978/T

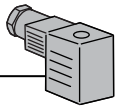

615979

617903/G

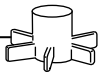

700011

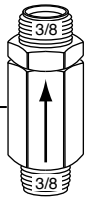

530143

551937

620405

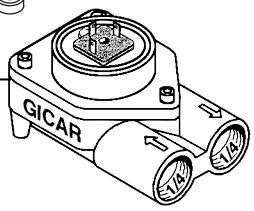

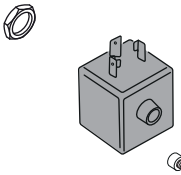

700898
517849
460007
528000
547322
460008
507018
507019
517206
300273
460010
700898
507017
616686
620576
700288
507016
522128
507015
620421
507021
460008
547322
519545
519546 VITON
460007
517206
503040
530137
522120
460010
522168
700898
507022
507020
507023

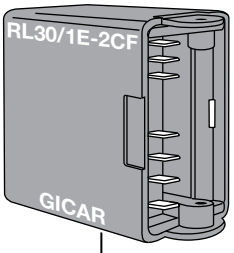

700737 220V
AUTOLIVELLO - AUTOFUEL

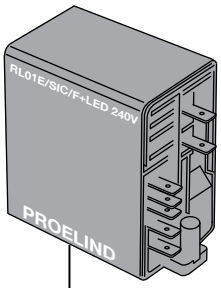

507031
507031/11 115V

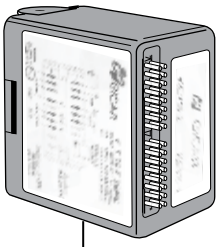

507028

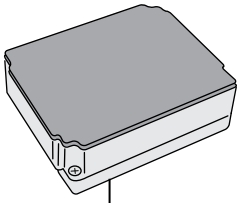

507029

703296

700749
20A 0-1

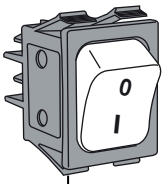

700429

ROSSO
RED

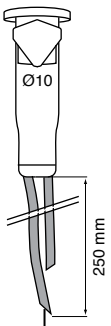

615511/22 220V

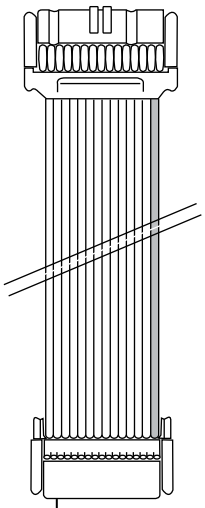

620706 600 mm - 16 PIN
620707 800 mm - 16 PIN

507008
GICAR CODE 8.9.46.46

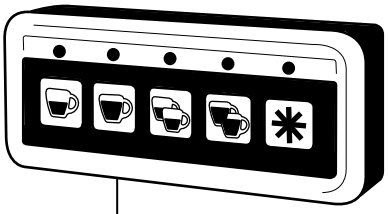

507024
GICAR CODE 9.9.09.51G

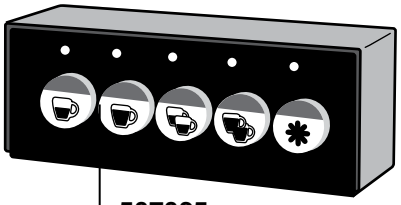

507025
GICAR CODE 9.9.07.28G

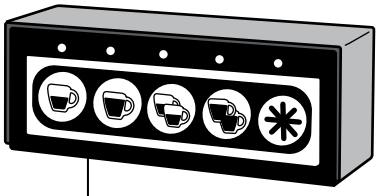

507026
GICAR CODE 9.5.27.60G

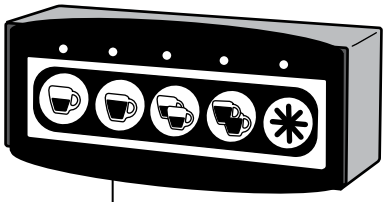

507027
GICAR CODE 9.5.28.30G 00

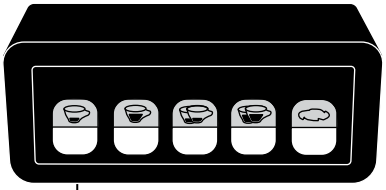

507032
GICAR CODE 9.5.28.61G 00

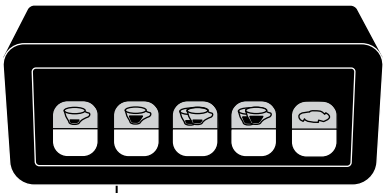

507033
GICAR CODE 9.5.28.59G 00

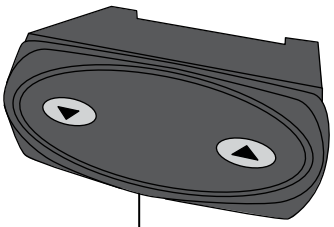

507030
GICAR CODE 9.3.00.43G

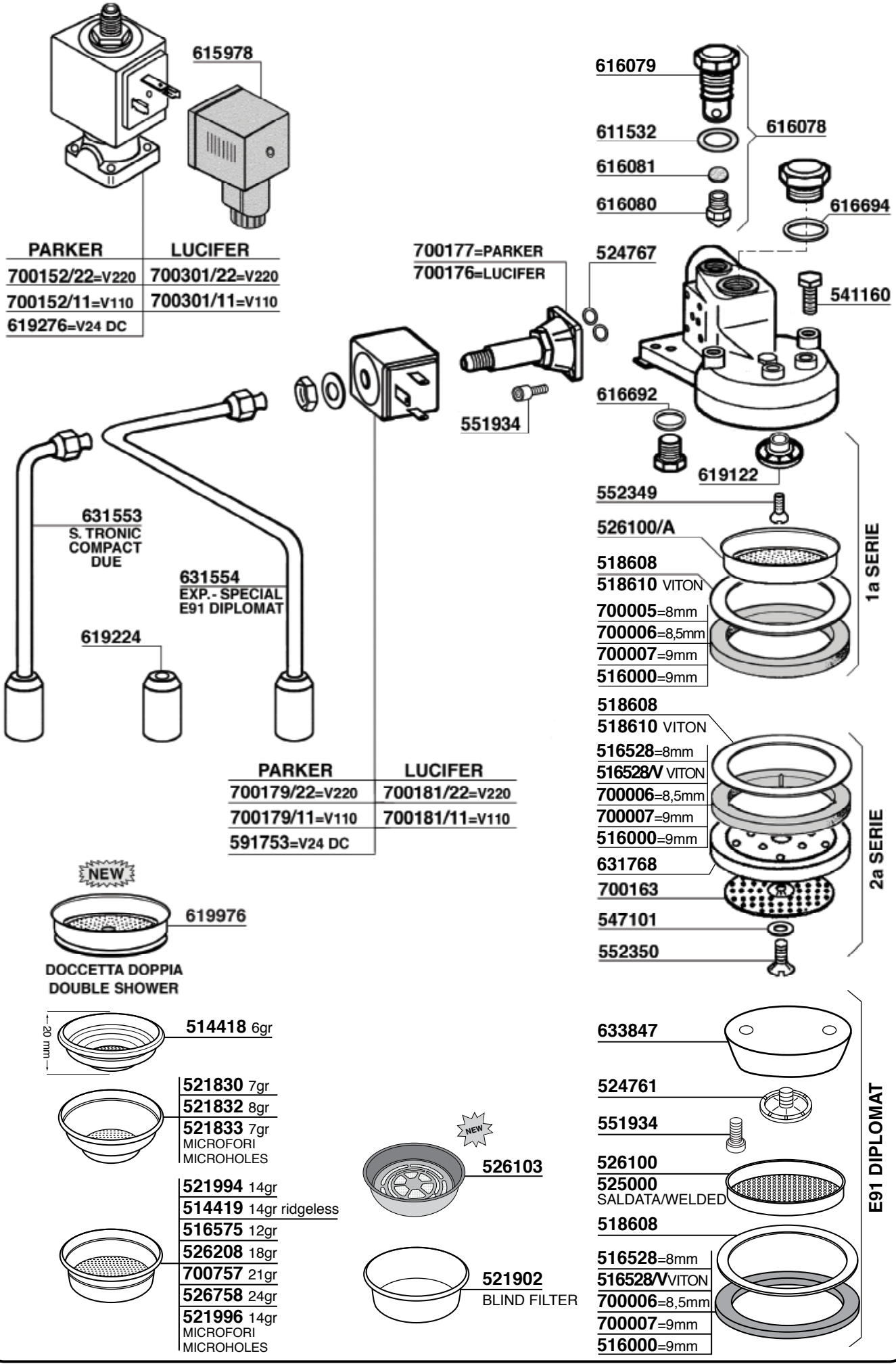
615978
PARKER
LUCIFER
700152/22=V220
700301/22=V220
700152/11=V110
700301/11=V110
619276=V24 DC
700177=PARKER
700176=LUCIFER
524767
551934
616079
611532
616078
616081
616080
616694
541160
616692
619122
552349
526100/A
518608
518610 VITON
700005=8mm
700006=8,5mm
700007=9mm
516000=9mm
1a SERIE
631553
S. TRONIC
COMPACT
DUE
631554
EXP.- SPECIAL
E91 DIPLOMAT
619224
PARKER
LUCIFER
700179/22=V220
700181/22=V220
700179/11=V110
700181/11=V110
591753=V24 DC
518608
518610 VITON
516528=8mm
516528/V VITON
700006=8,5mm
700007=9mm
516000=9mm
631768
700163
547101
552350
2a SERIE
NEW
619976
DOCCETTA DOPPIA
DOUBLE SHOWER
20 mm
514418 6gr
521830 7gr
521832 8gr
521833 7gr
MICROFORI
MICROHOLES
521994 14gr
514419 14gr ridgeless
516575 12gr
526208 18gr
700757 21gr
526758 24gr
521996 14gr
MICROFORI
MICROHOLES
NEW
526103
521902
BLIND FILTER
633847
524761
551934
526100
525000
SALDATA/WELDED
518608
516528=8mm
516528/V VITON
700006=8,5mm
700007=9mm
516000=9mm
E91 DIPLOMAT

E91 - E92 - ELITE - EMBLEMA - ENOVA - STYLEMA - TEOREMA

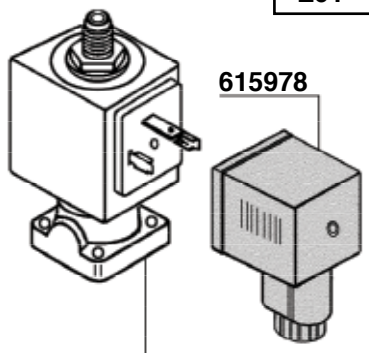

PARKER	LUCIFER
700152/22=V220	700301/22=V220
700152/11=V110	700301/11=V110

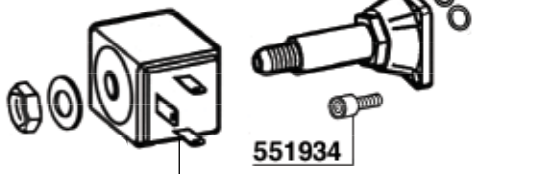

PARKER	LUCIFER
700179/22=V220	700181/22=V220
700179/11=V110	700181/11=V110

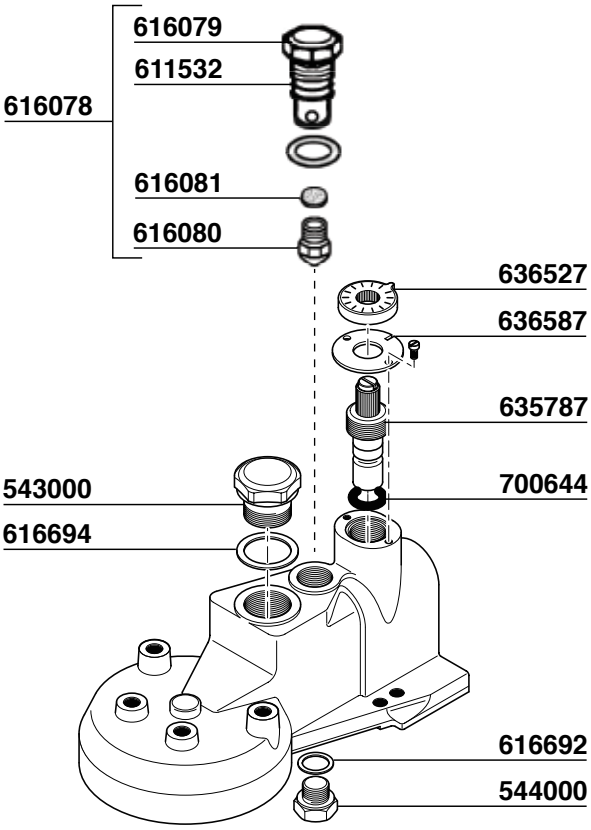

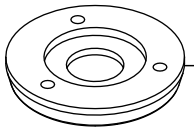

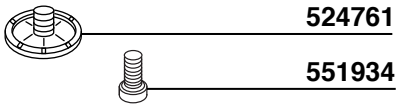

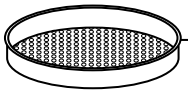

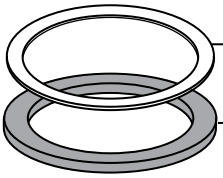

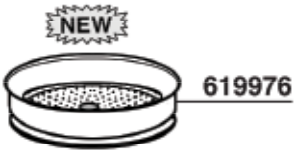

DOCCETTA DOPPIA
DOUBLE SHOWER

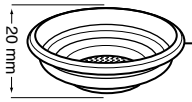

521830 7gr
521832 8gr
521833 7gr
MICROFORI
MICROHOLES

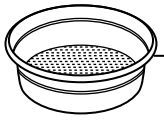

521994 14gr
514419 14gr ridgeless
516575 12gr
526208 18gr
700757 21gr
526758 24gr
521996 14gr
MICROFORI
MICROHOLES

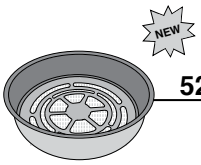

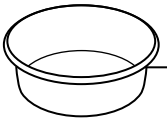

521902
BLIND FILTER

PORTAFILTRI

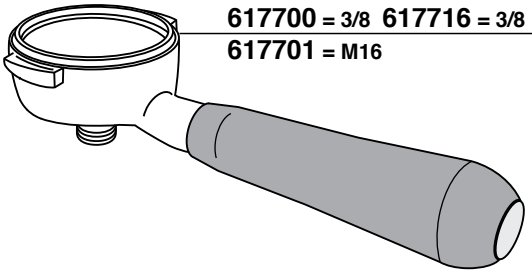

617700 = 3/8 617716 = 3/8 15°
617701 = M16

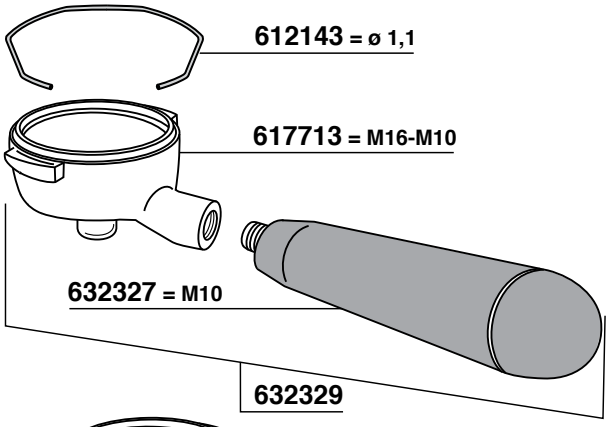

612143 = ø 1,1
617713 = M16-M10
632327 = M10
632329

612143 = ø 1,1
612142 = ø 1,2

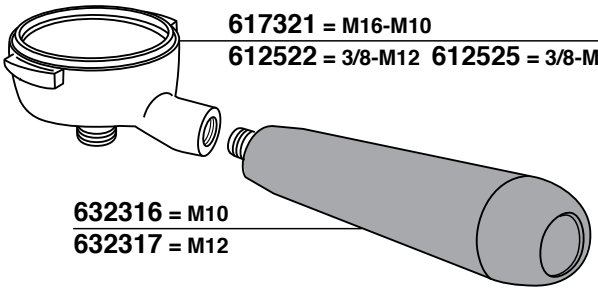

617321 = M16-M10
612522 = 3/8-M12 612525 = 3/8-M12 15°
632316 = M10
632317 = M12

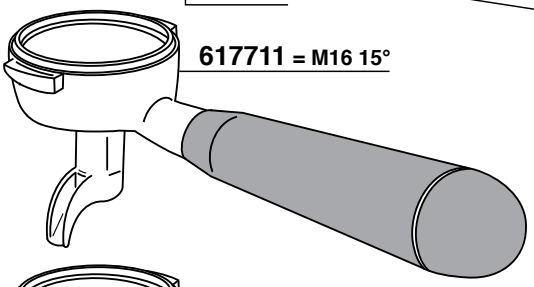

617711 = M16 15°

617940
TAPPO CROMATO
CHROMATE PLUG

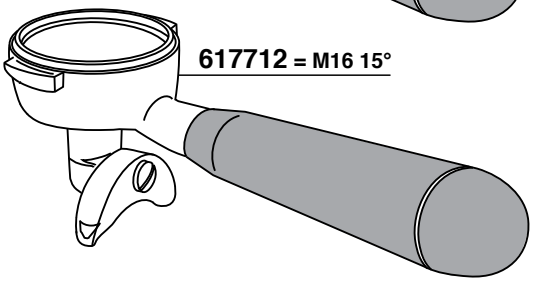

617712 = M16 15°

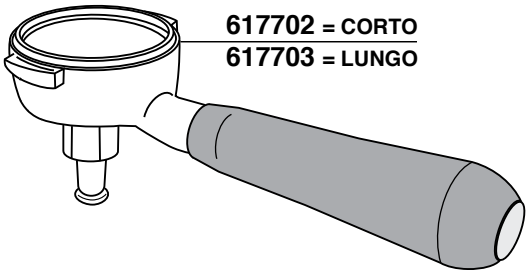

617702 = CORTO
617703 = LUNGO

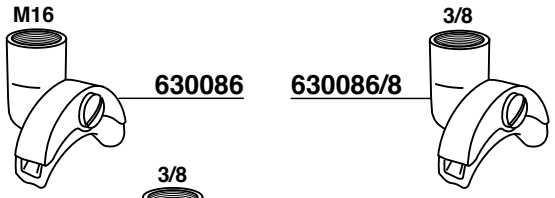

M16 630086
630086/8 3/8

3/8
511672=CORTO
630086/8=LUNGO

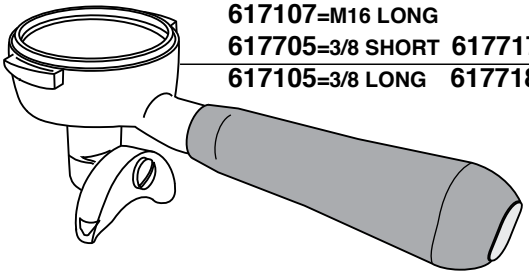

617107=M16 LONG
617705=3/8 SHORT 617717=3/8 SHORT 15°
617105=3/8 LONG 617718=3/8 LONG 15°

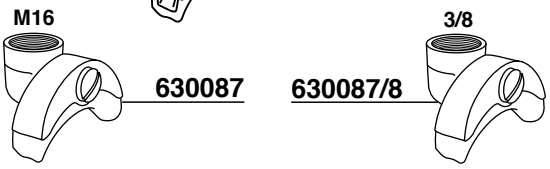

M16 630087
630087/8 3/8

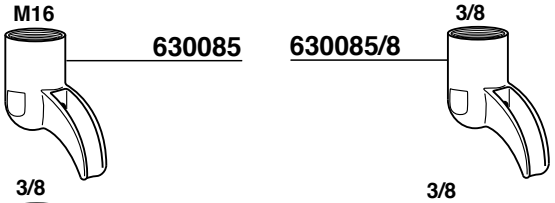

M16 630085
630085/8 3/8

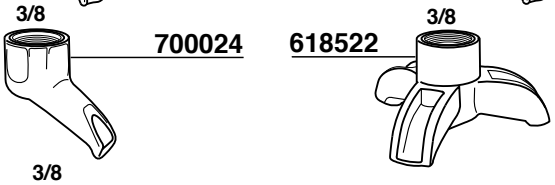

3/8 700024
618522 3/8

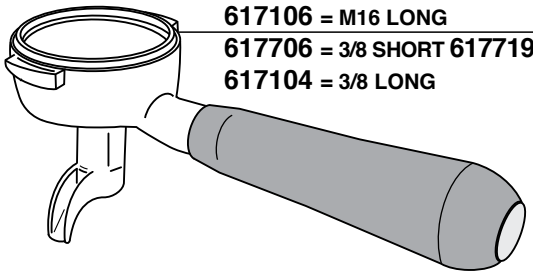

617106 = M16 LONG
617706 = 3/8 SHORT 617719 = 3/8 SHORT 15°
617104 = 3/8 LONG

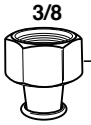

3/8
502003=CORTO
615599=LUNGO

M16
617346=CORTO
617345=LUNGO

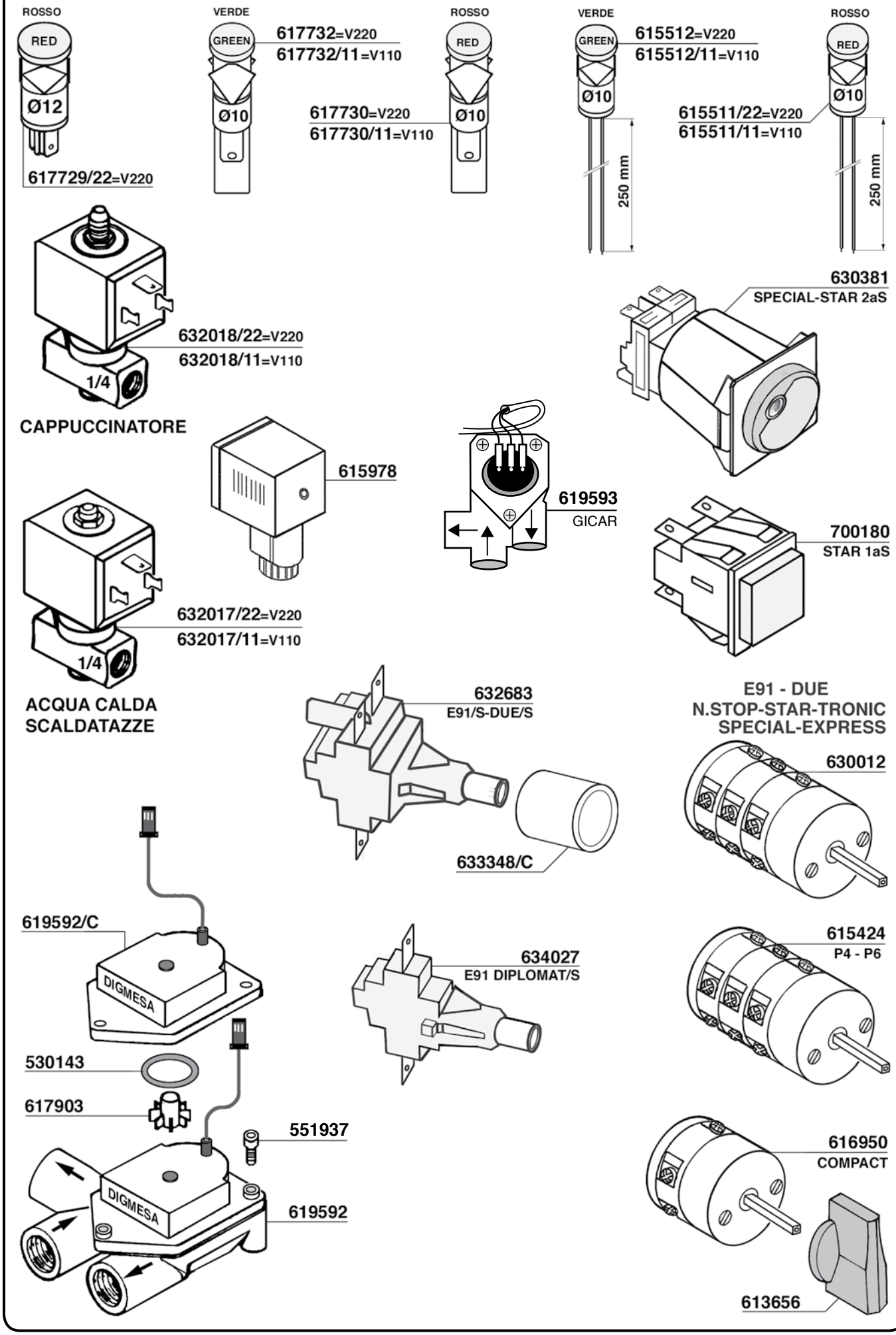
ROSSO
RED
Ø12
617729/22=V220
VERDE
GREEN
Ø10
617732=V220
617732/11=V110
ROSSO
RED
Ø10
617730=V220
617730/11=V110
VERDE
GREEN
Ø10
250 mm
615512=V220
615512/11=V110
ROSSO
RED
Ø10
250 mm
615511/22=V220
615511/11=V110
632018/22=V220
632018/11=V110
1/4
CAPPUCCINATORE
630381
SPECIAL-STAR 2aS
615978
619593
GICAR
700180
STAR 1aS
632017/22=V220
632017/11=V110
1/4
ACQUA CALDA
SCALDATAZZE
632683
E91/S-DUE/S
633348/C
E91 - DUE
N.STOP-STAR-TRONIC
SPECIAL-EXPRESS
630012
619592/C
DIGMESA
634027
E91 DIPLOMAT/S
615424
P4 - P6
530143
617903
551937
DIGMESA
619592
616950
COMPACT
613656

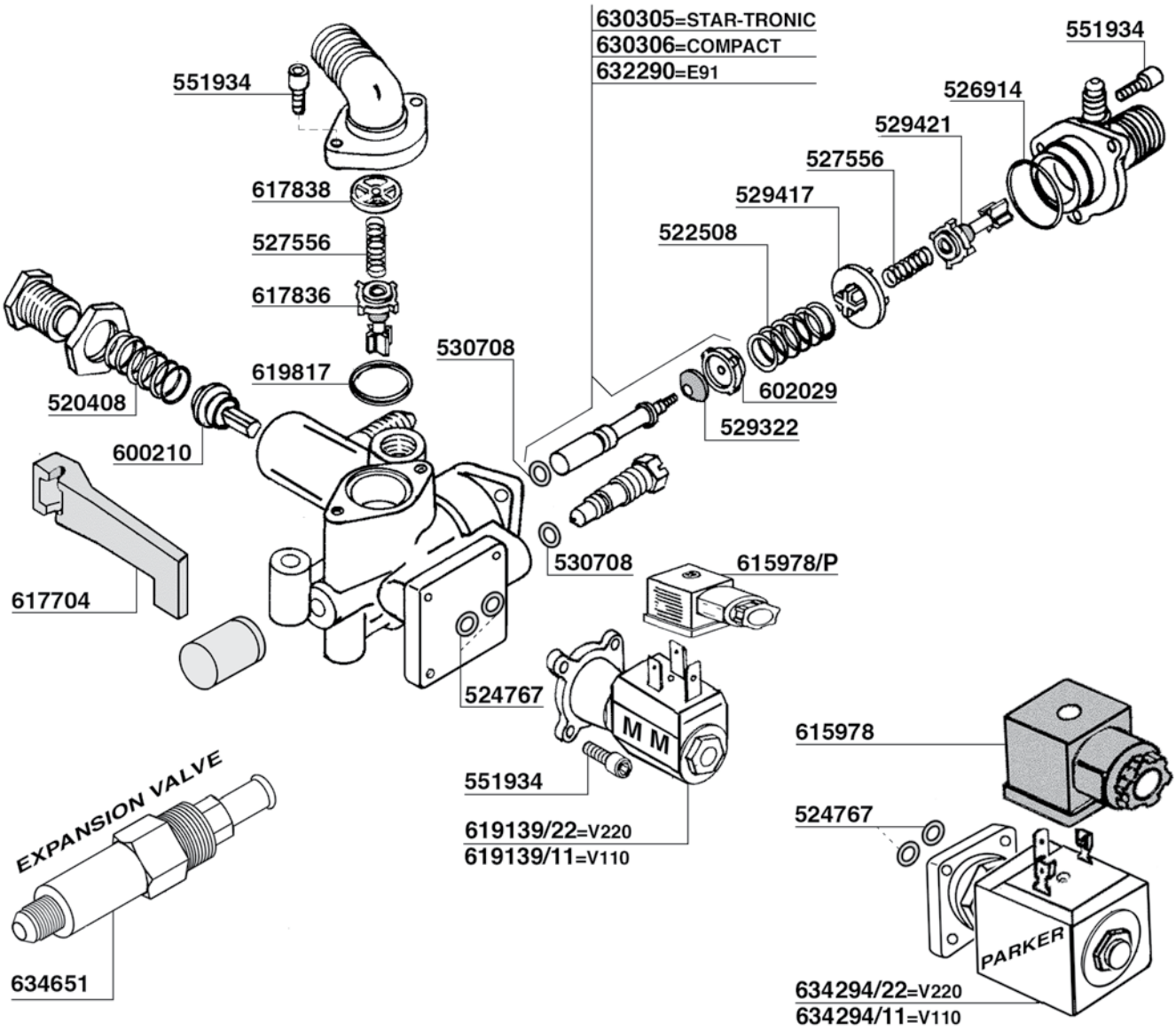
630305=STAR-TRONIC
630306=COMPACT
632290=E91
551934
551934
526914
529421
527556
529417
522508
617838
527556
617836
530708
619817
520408
600210
602029
529322
530708
615978/P
617704
524767
M M
551934
619139/22=V220
619139/11=V110
615978
524767
EXPANSION VALVE
PARKER
634651
634294/22=V220
634294/11=V110

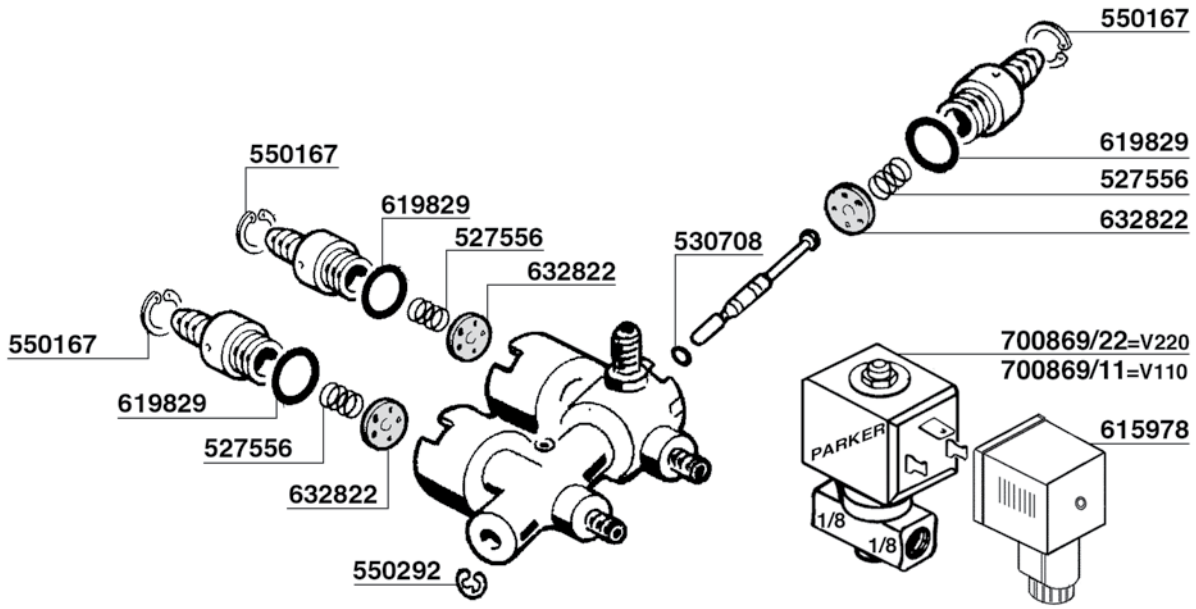
550167
619829
527556
632822
550167
619829
527556
632822
530708
550167
619829
527556
632822
700869/22=V220
700869/11=V110
PARKER
1/8
1/8
615978
550292

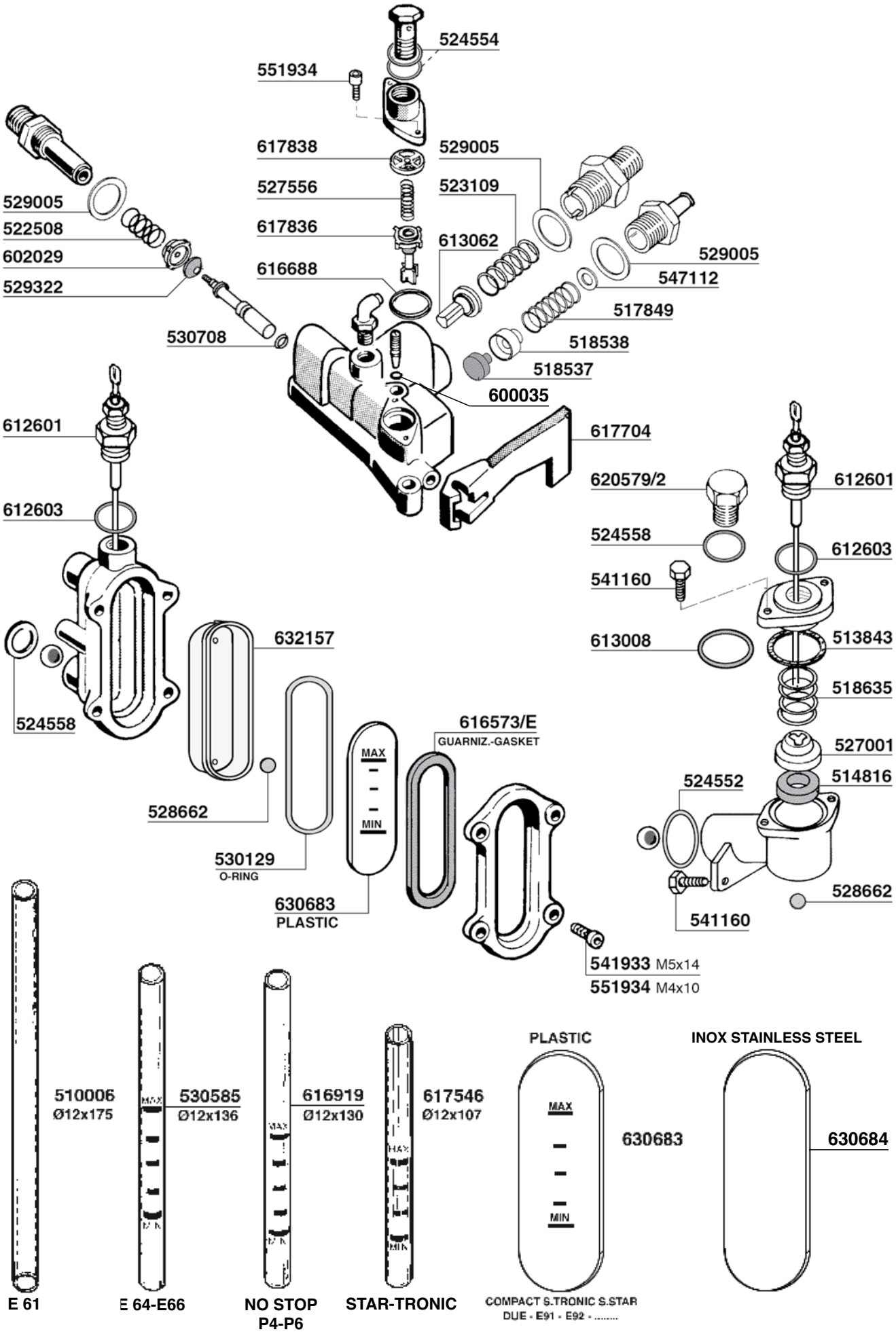
524554
551934
617838
529005
527556
523109
529005
522508
617836
613062
602029
616688
529005
529322
547112
517849
530708
518538
518537
600035
612601
617704
620579/2
612601
612603
524558
612603
541160
632157
613008
513843
518635
524558
616573/E
GUARNIZ.-GASKET
527001
MAX
MIN
524552
514816
528662
530129
O-RING
630683
PLASTIC
528662
541160
541933 M5x14
551934 M4x10
PLASTIC
INOX STAINLESS STEEL
510006
Ø12x175
530585
Ø12x136
616919
Ø12x130
617546
Ø12x107
630683
630684
E 61
E 64-E66
NO STOP
P4-P6
STAR-TRONIC
COMPACT S.TRONIC S.STAR
DUE - E91 - E92 - .....

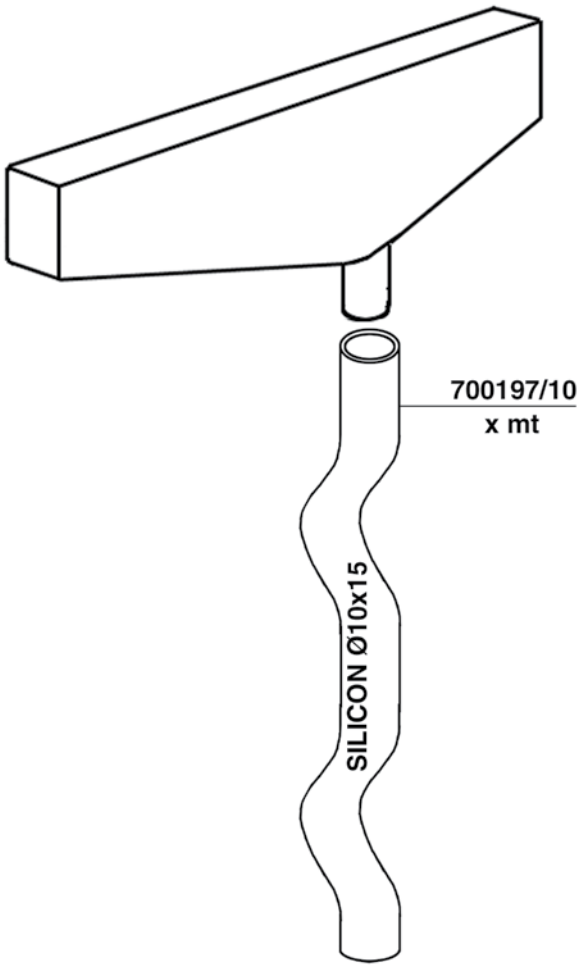
700197/10
x mt
SILICON Ø10x15

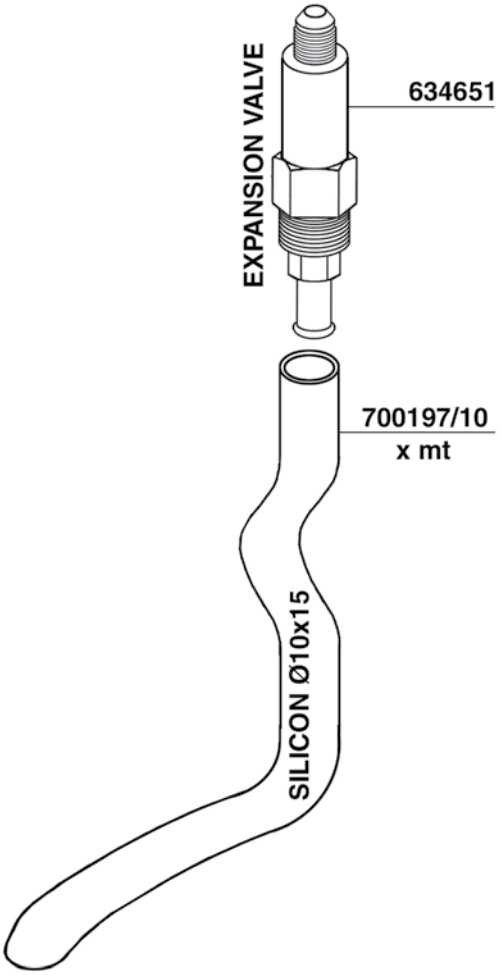
EXPANSION VALVE
634651
700197/10
x mt
SILICON Ø10x15

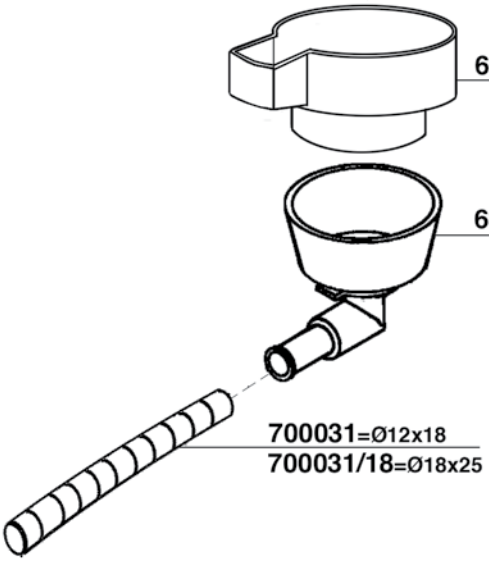
634635
632932
700031=Ø12x18
700031/18=Ø18x25

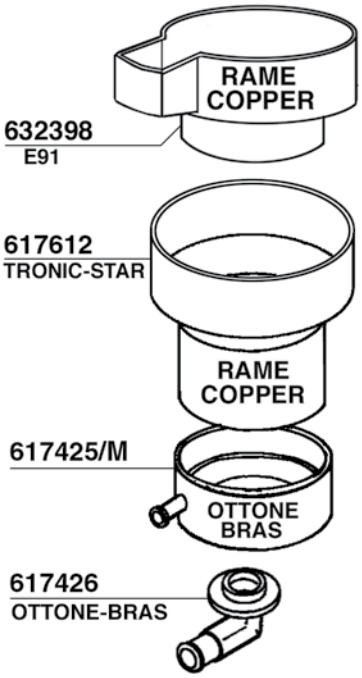
RAME
COPPER
632398
E91
617612
TRONIC-STAR
RAME
COPPER
617425/M
OTTONE
BRAS
617426
OTTONE-BRAS

NUOVA RICAMBI PARTI COMPATIBILI FAEMA Tav. 08

N. STOP-COMPACT

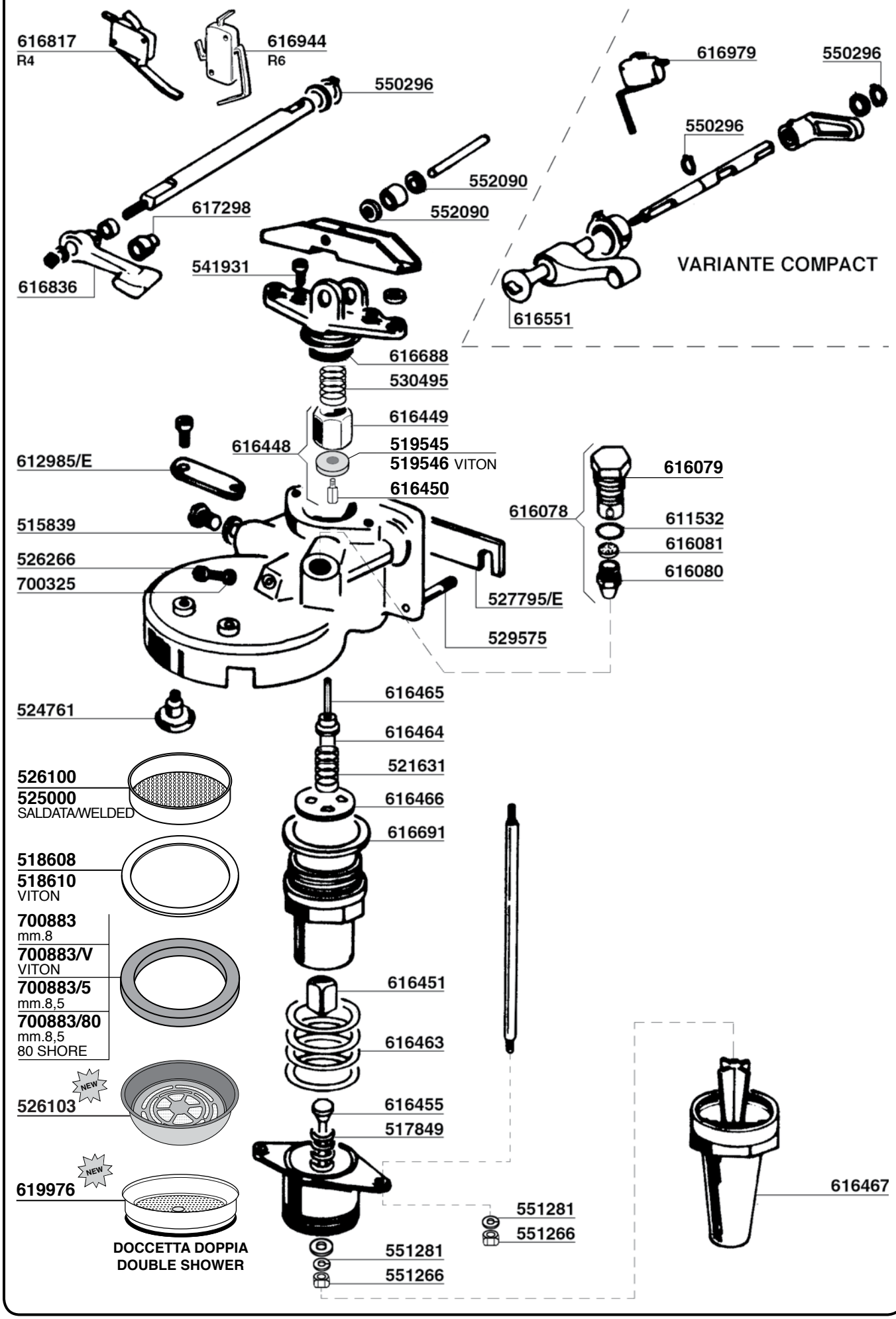

P4/P6 - E64/E66

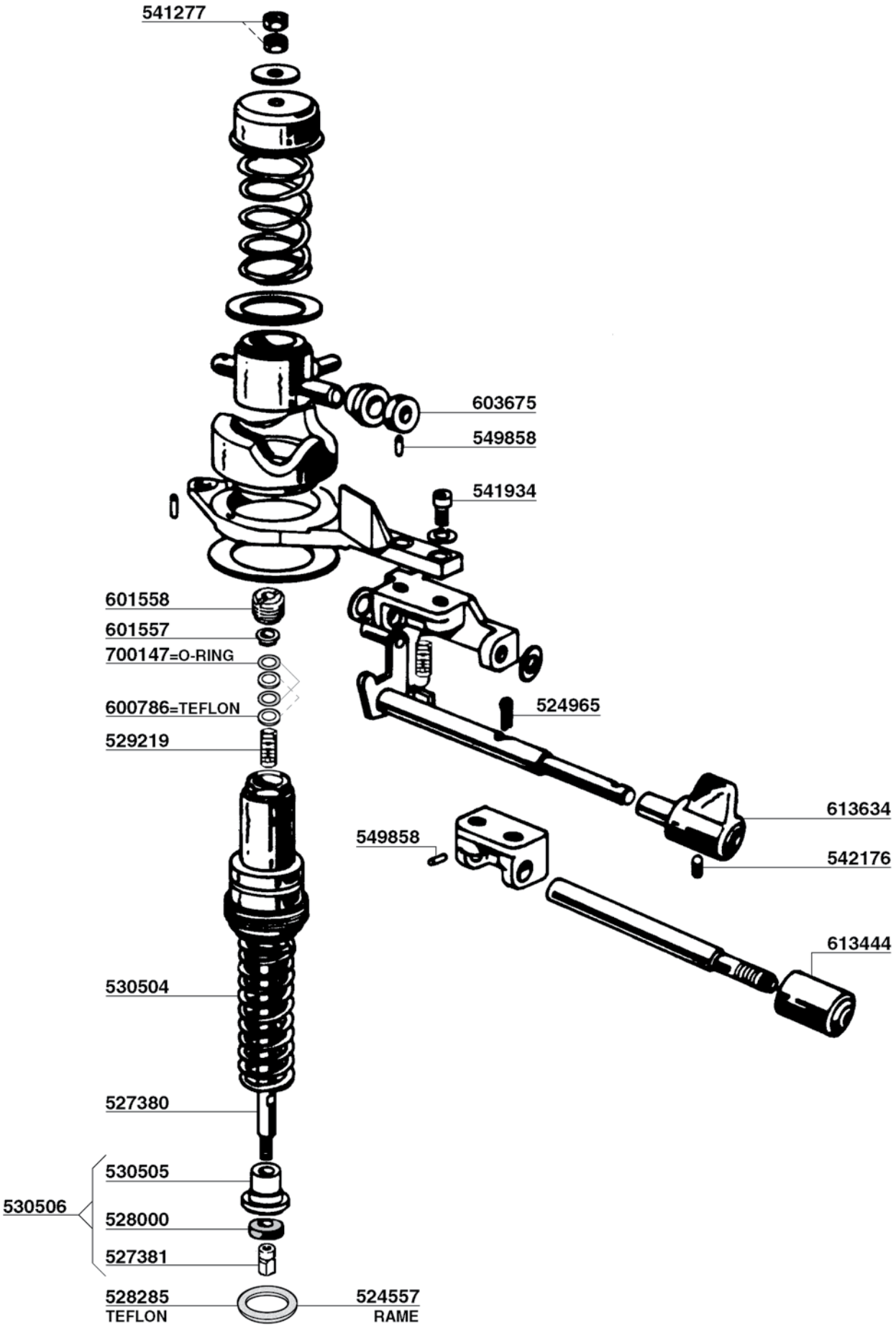
541277
603675
549858
541934
601558
601557
700147=O-RING
600786=TEFLON
529219
524965
613634
549858
542176
613444
530504
527380
530505
530506
528000
527381
528285
TEFLON
524557
RAME

P4/P6 - E64/E66

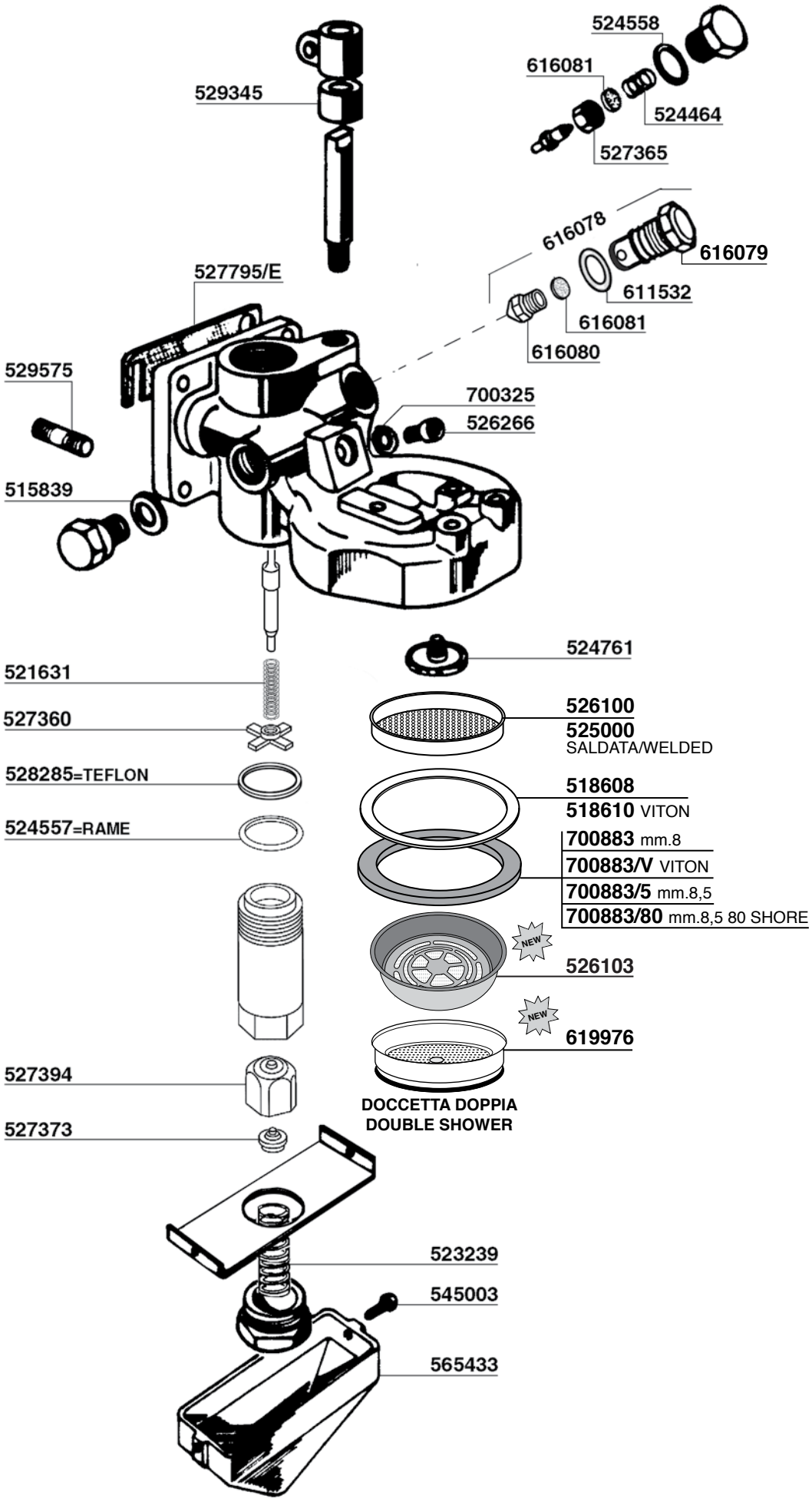
524558
616081
524464
527365
529345
616078
616079
611532
616081
616080
527795/E
529575
700325
526266
515839
524761
521631
526100
525000
SALDATA/WELDED
527360
528285=TEFLON
518608
518610 VITON
524557=RAME
700883 mm.8
700883/V VITON
700883/5 mm.8,5
700883/80 mm.8,5 80 SHORE
NEW
526103
NEW
619976
527394
DOCCETTA DOPPIA
DOUBLE SHOWER
527373
523239
545003
565433

P6 - E66

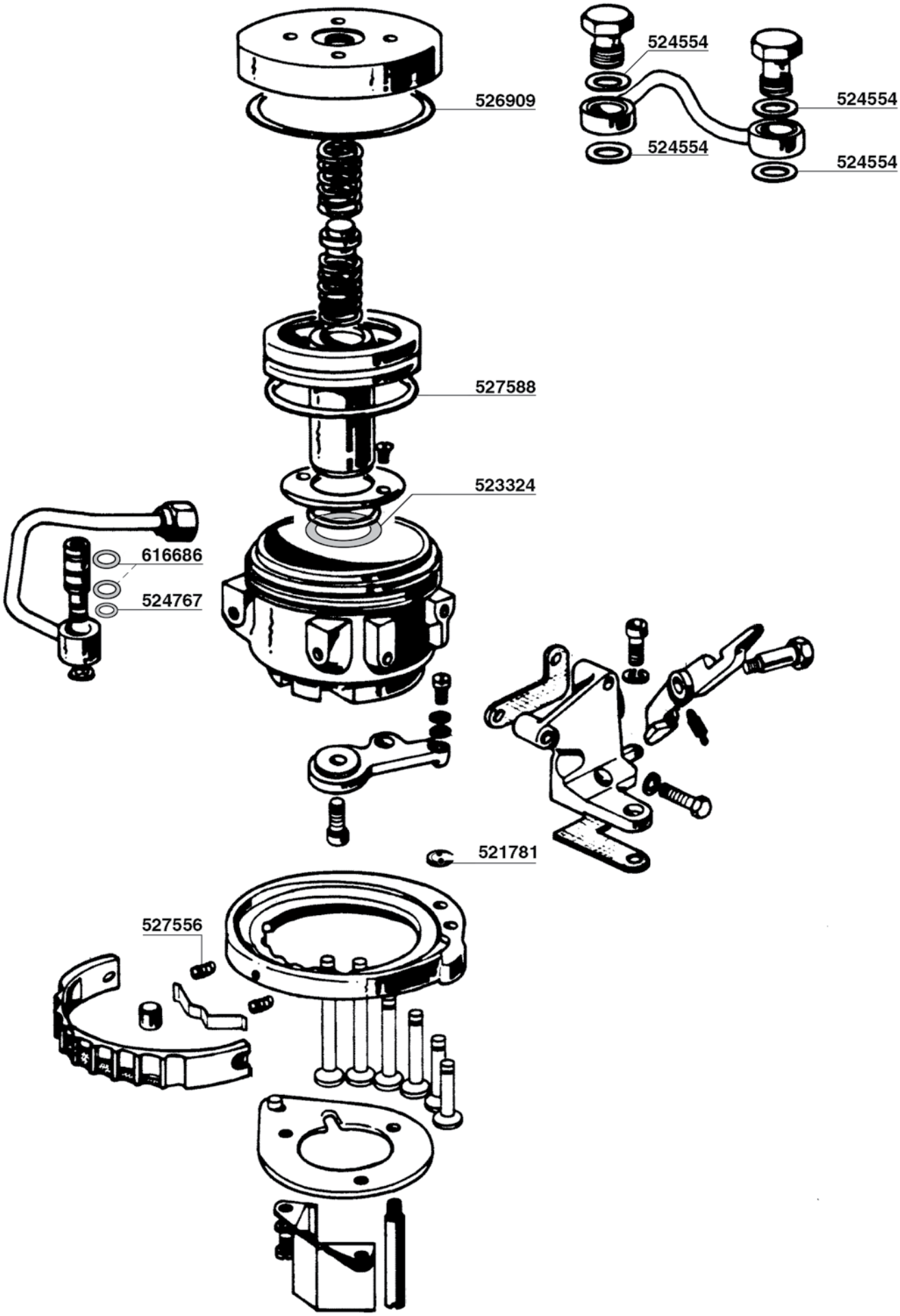
524554
526909
524554
524554
524554
527588
523324
616686
524767
521781
527556

NO STOP/A - P6

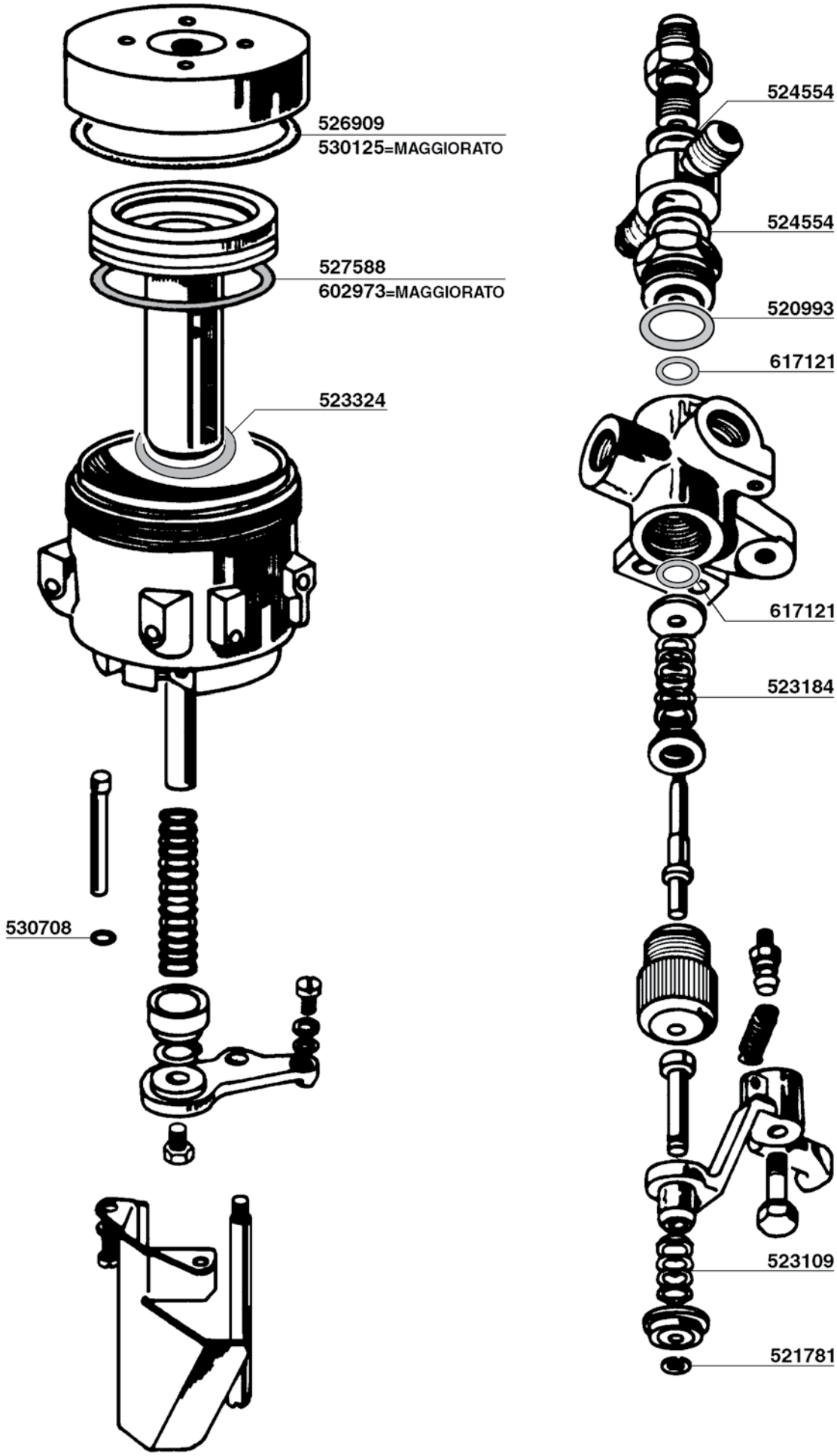
526909
530125=MAGGIORATO
527588
602973=MAGGIORATO
523324
530708
524554
524554
520993
617121
617121
523184
523109
521781

E61 - ARIETE

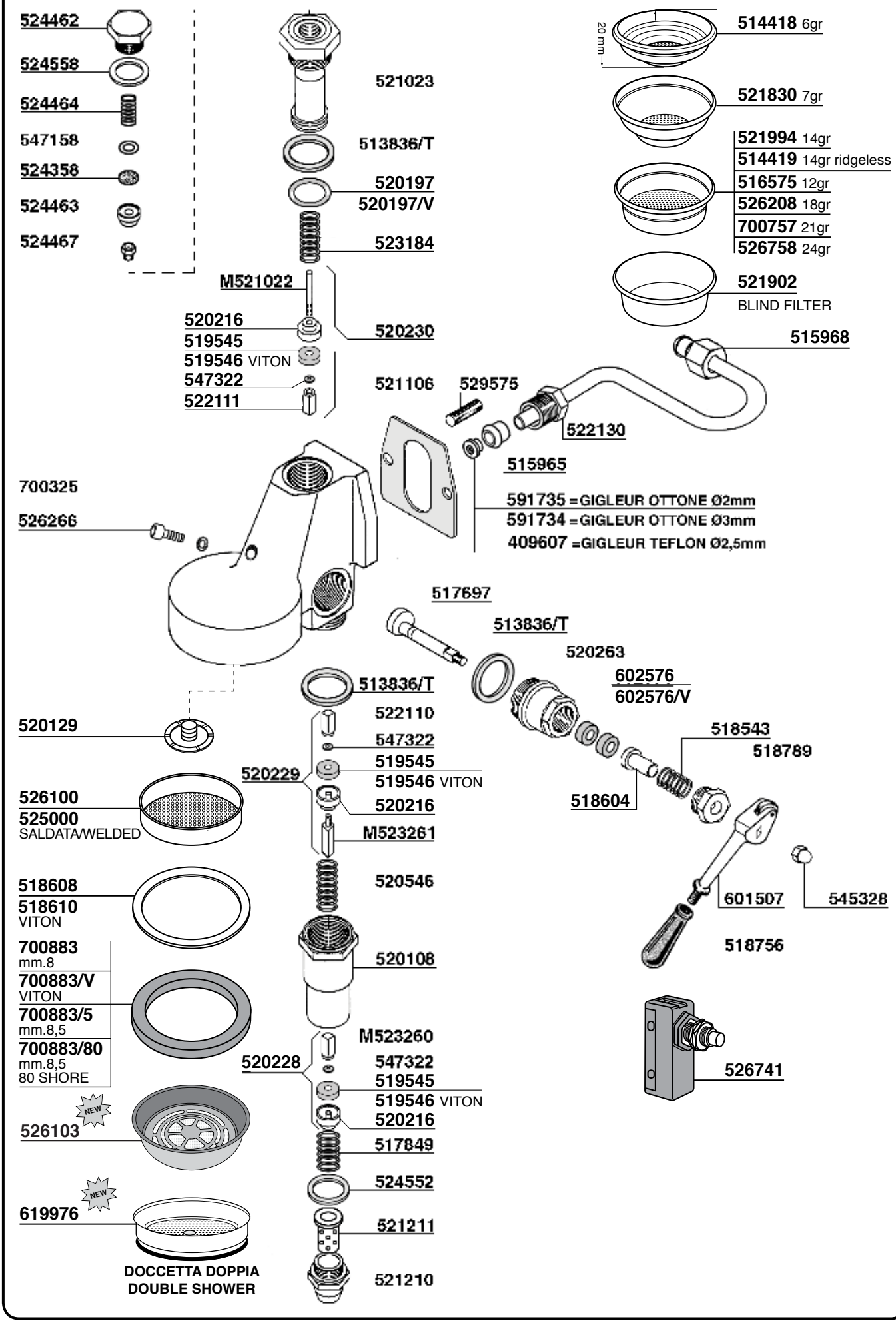
524462
524558
524464
547158
524358
524463
524467
521023
513836/T
520197
520197/V
523184
M521022
520216
519545
519546 VITON
547322
522111
520230
521106
529575
522130
515968
514418 6gr
20 mm
521830 7gr
521994 14gr
514419 14gr ridgeless
516575 12gr
526208 18gr
700757 21gr
526758 24gr
521902
BLIND FILTER
515965
591735 =GIGLEUR OTTONE Ø2mm
591734 =GIGLEUR OTTONE Ø3mm
409607 =GIGLEUR TEFLON Ø2,5mm
700325
526266
517697
513836/T
520263
602576
602576/V
518543
518789
518604
601507
545328
518756
526741
520129
526100
525000
SALDATA/WELDED
518608
518610
VITON
700883
mm.8
700883/V
VITON
700883/5
mm.8,5
700883/80
mm.8,5
80 SHORE
NEW
526103
NEW
619976
DOCCETTA DOPPIA
DOUBLE SHOWER
513836/T
522110
547322
519545
519546 VITON
520216
520229
M523261
520546
520108
M523260
547322
519545
519546 VITON
520216
520228
517849
524552
521211
521210

ZODIACO - T1

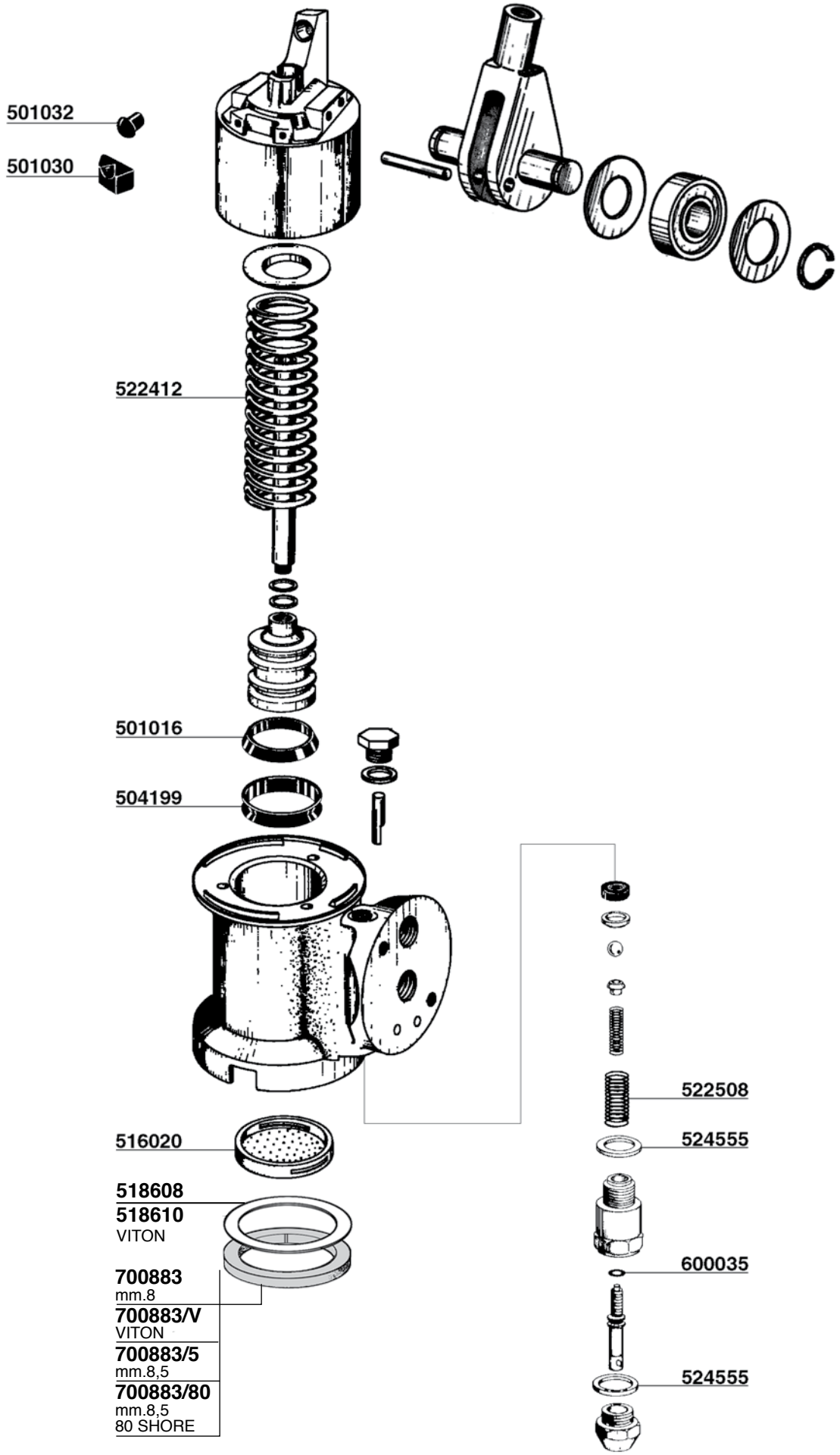
501032
501030
522412
501016
504199
516020
518608
518610
VITON
700883
mm.8
700883/V
VITON
700883/5
mm.8,5
700883/80
mm.8,5
80 SHORE
522508
524555
600035
524555

N.STOP-COMPACT - EXPRESS-TRONIC

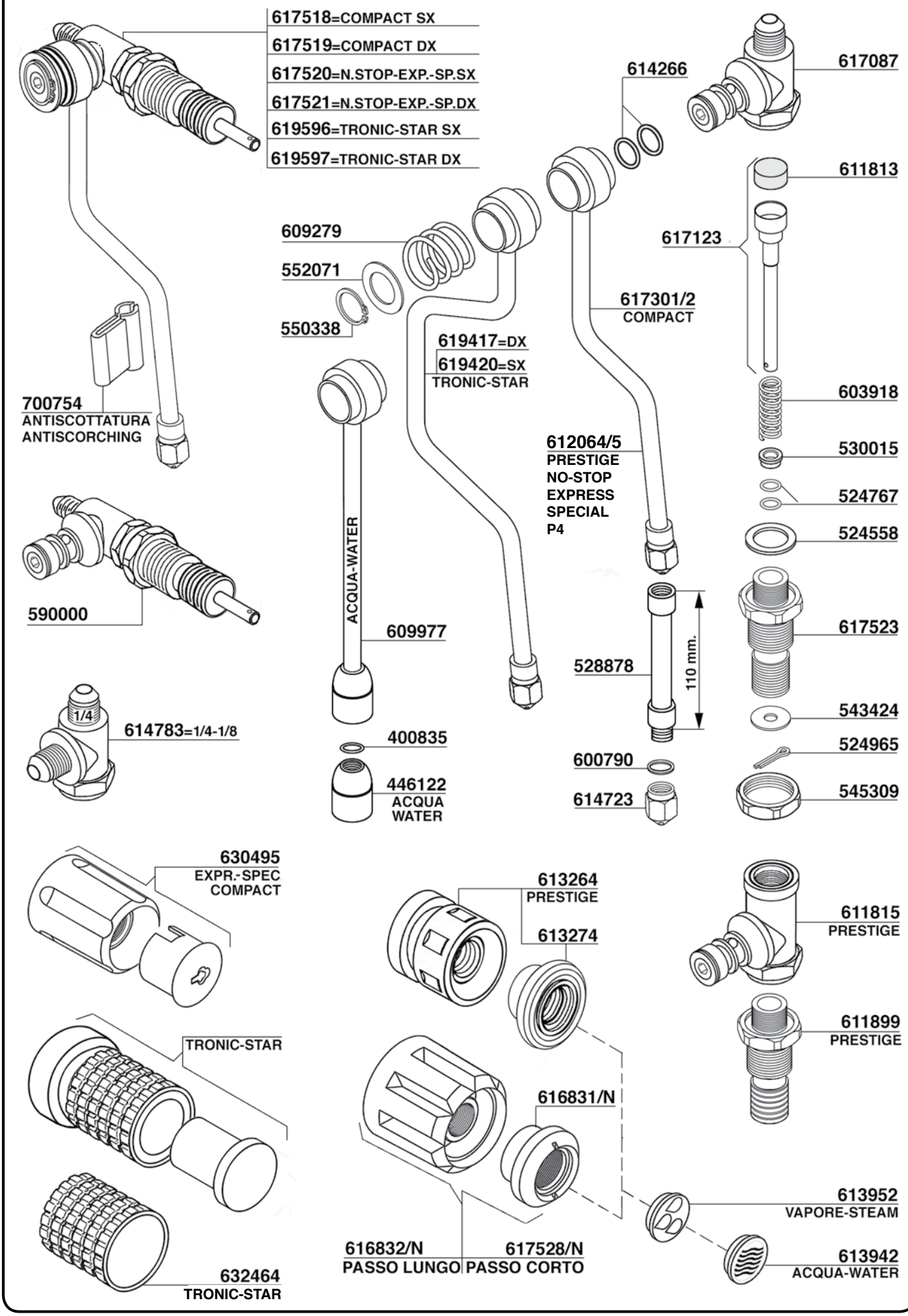

E91 - DUE - DIPLOMAT

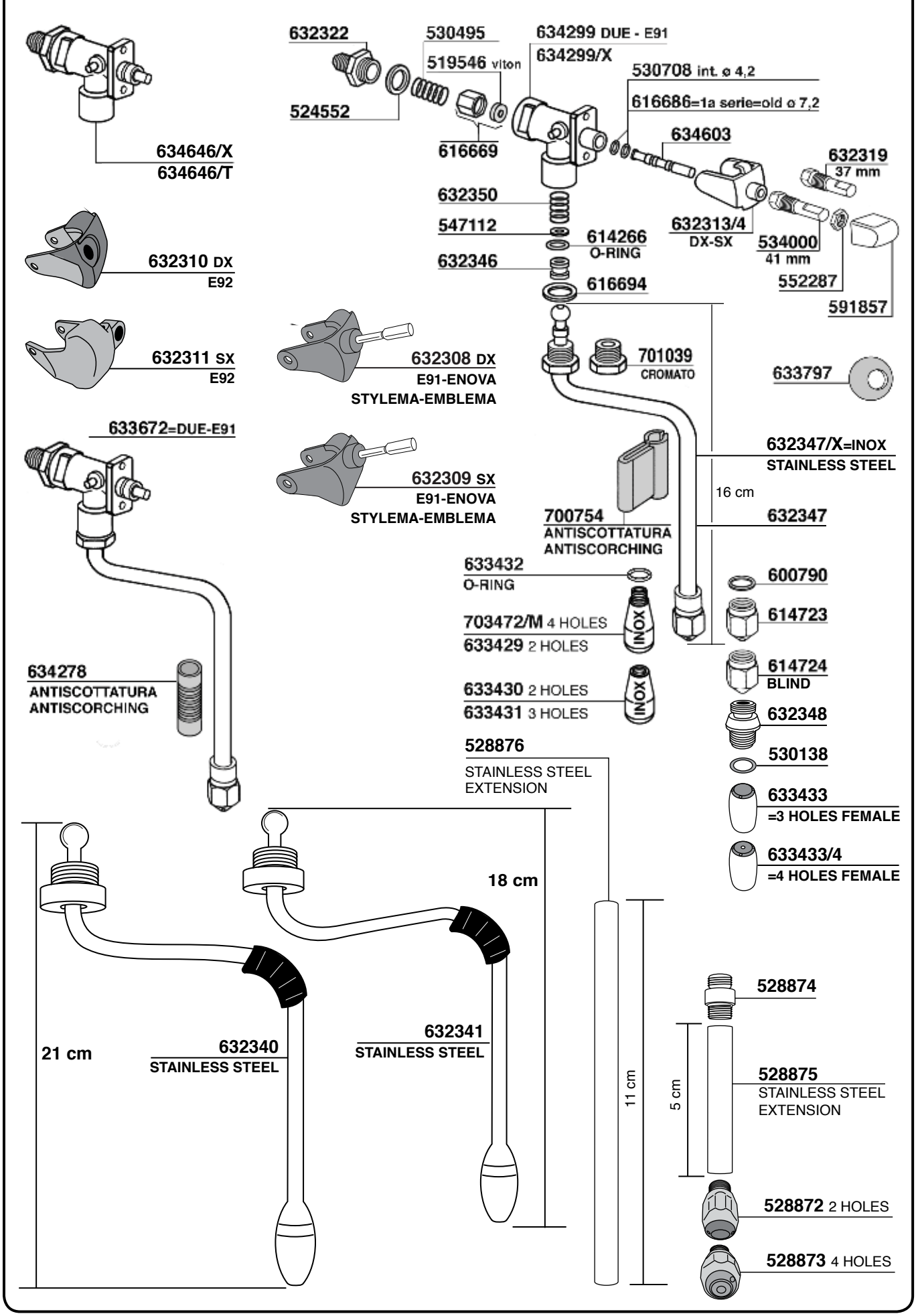

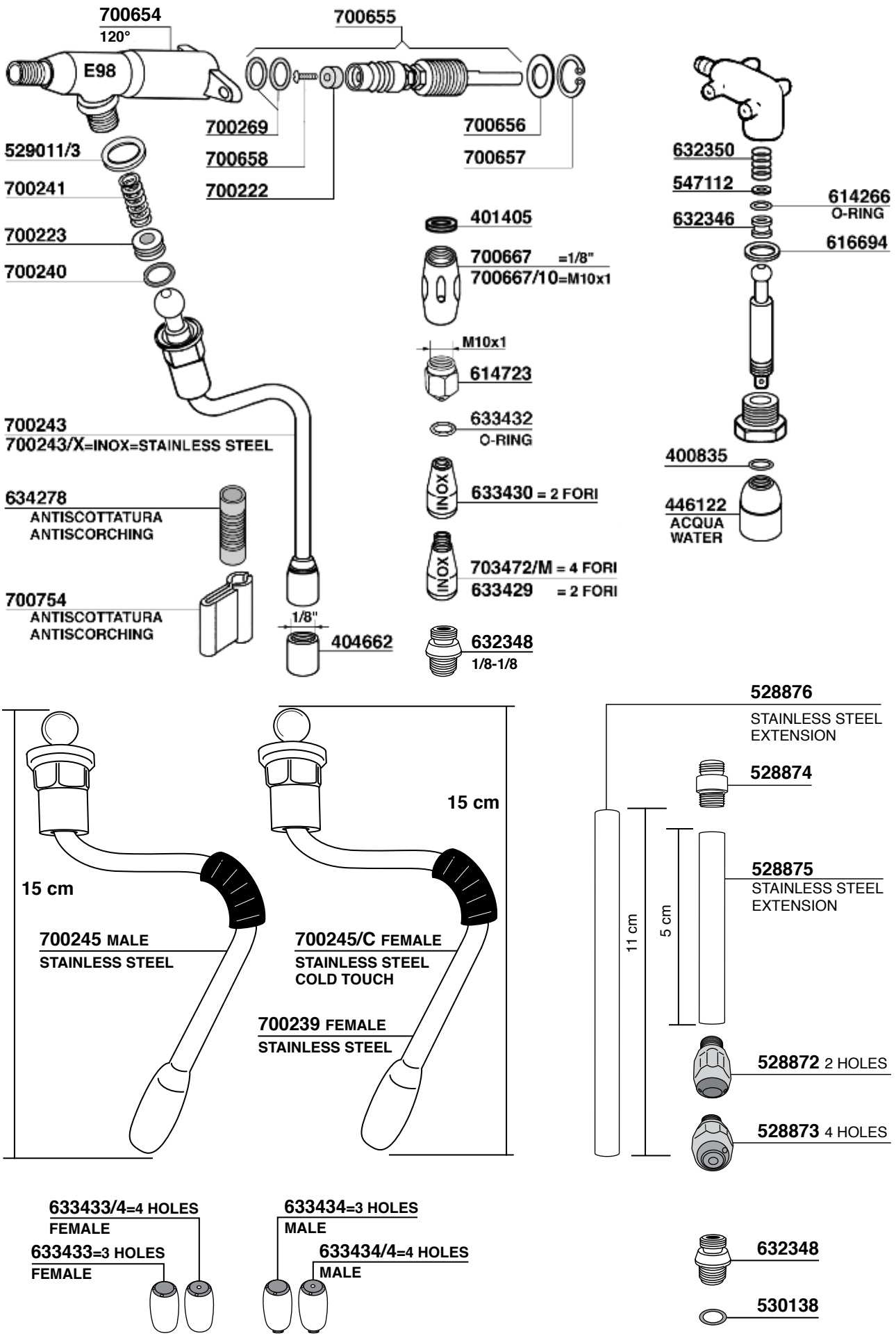
700654
120°
E98
700655
700269
700658
700222
700656
700657
529011/3
700241
700223
700240
401405
700667 =1/8"
700667/10=M10x1
M10x1
614723
633432
O-RING
700243
700243/X=INOX=STAINLESS STEEL
634278
ANTISCOTTATURA
ANTISCORCHING
700754
ANTISCOTTATURA
ANTISCORCHING
1/8"
404662
INOX
633430 = 2 FORI
INOX
703472/M = 4 FORI
633429 = 2 FORI
632348
1/8-1/8
632350
547112
614266
O-RING
632346
616694
400835
446122
ACQUA
WATER
15 cm
15 cm
700245 MALE
STAINLESS STEEL
700245/C FEMALE
STAINLESS STEEL
COLD TOUCH
700239 FEMALE
STAINLESS STEEL
528876
STAINLESS STEEL
EXTENSION
528874
528875
STAINLESS STEEL
EXTENSION
11 cm
5 cm
528872 2 HOLES
528873 4 HOLES
633433/4=4 HOLES
FEMALE
633433=3 HOLES
FEMALE
633434=3 HOLES
MALE
633434/4=4 HOLES
MALE
632348
530138

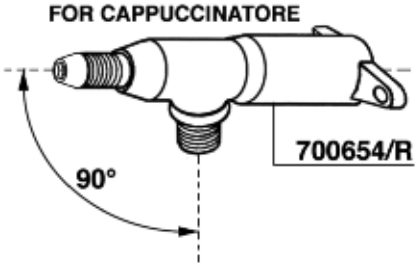
FOR CAPPUCCINATORE
90°
700654/R

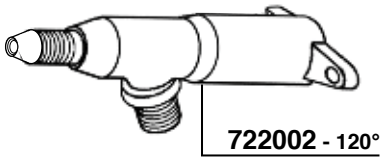
722002 - 120°

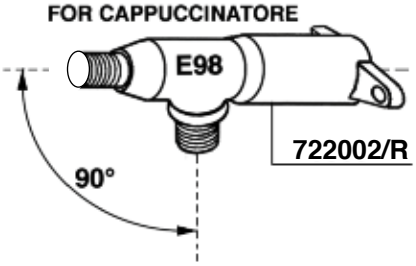
FOR CAPPUCCINATORE
E98
90°
722002/R

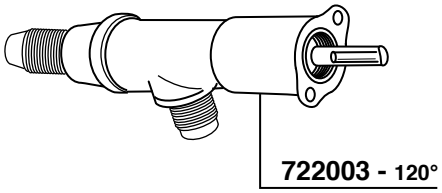
722003 - 120°

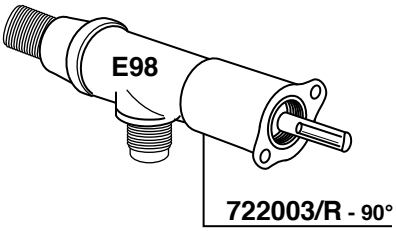
E98
722003/R - 90°

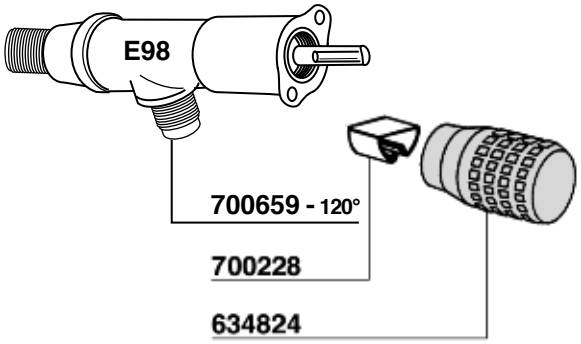
E98
700659 - 120°
700228
634824

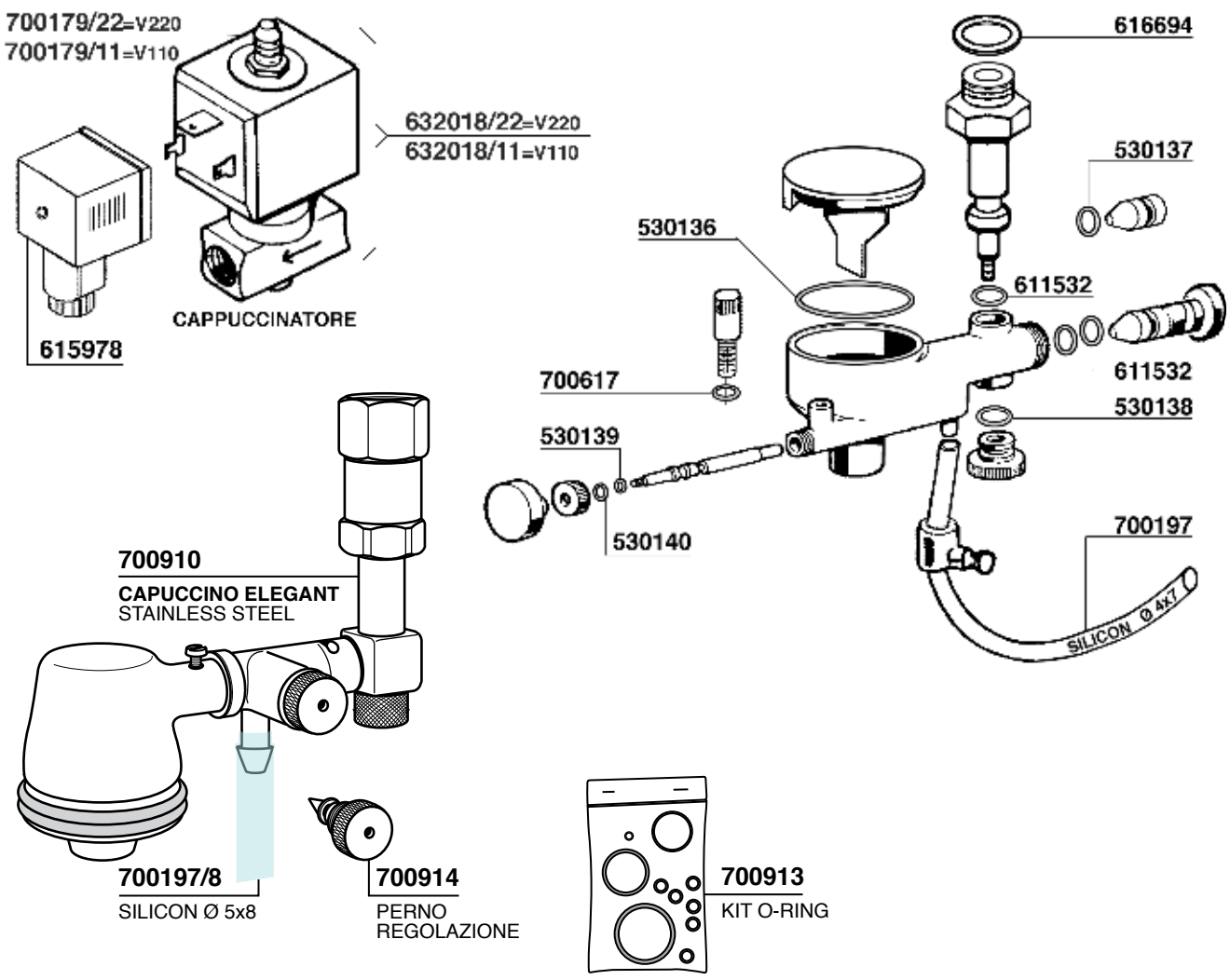
700179/22=V220
700179/11=V110
632018/22=V220
632018/11=V110
CAPPUCCINATORE
615978
616694
530137
530136
611532
611532
530138
700617
530139
530140
700197
SILICON Ø 4x7
700910
CAPUCCINO ELEGANT
STAINLESS STEEL
700197/8
SILICON Ø 5x8
700914
PERNO
REGOLAZIONE
700913
KIT O-RING

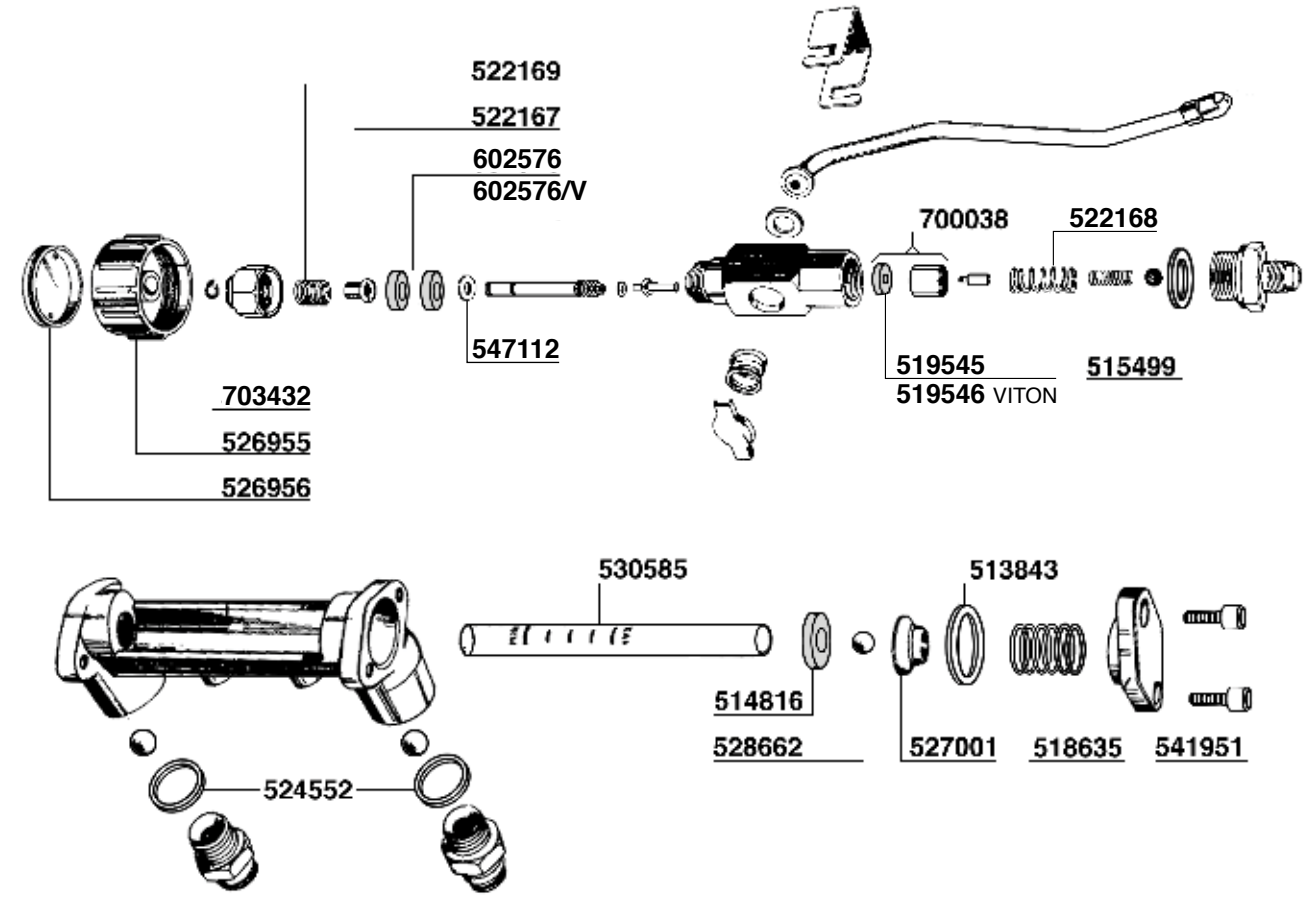
522169
522167
602576
602576/V
700038
522168
547112
519545
519546 VITON
515499
703432
526955
526956
530585
513843
514816
528662
527001
518635
541951
524552

E61-ARIETE-ZODIACO

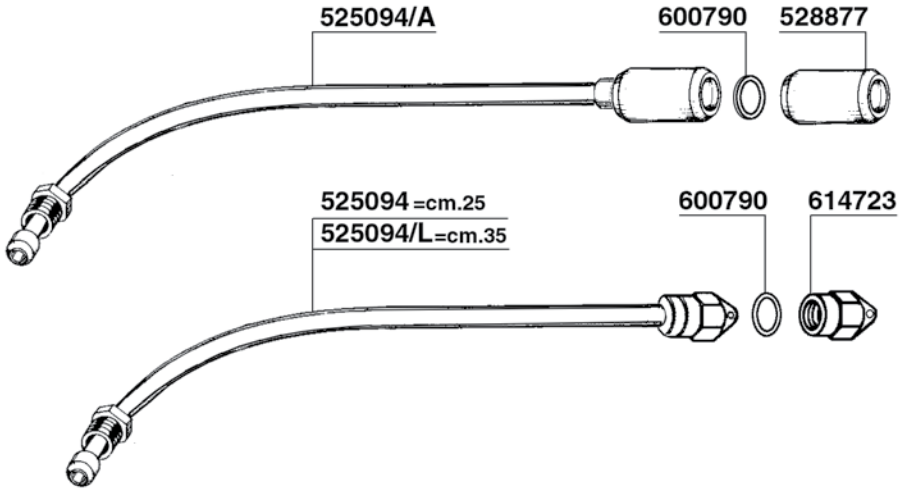

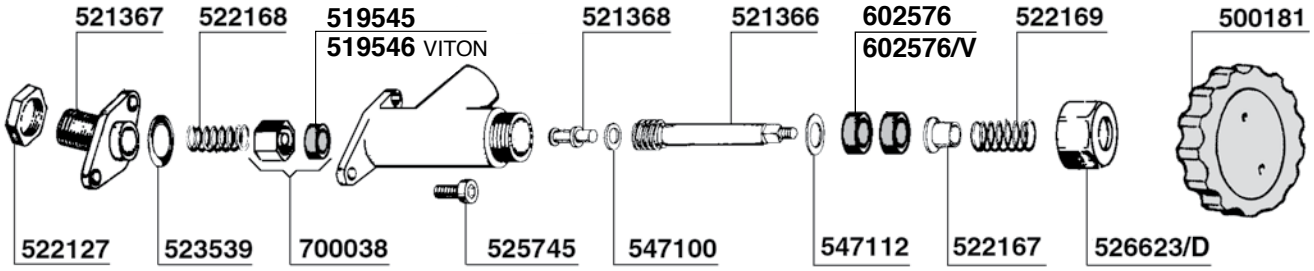

RUBINETTO CON TUBO SNODATO
STEAM VALVE WITH ARTICULATED PIPE

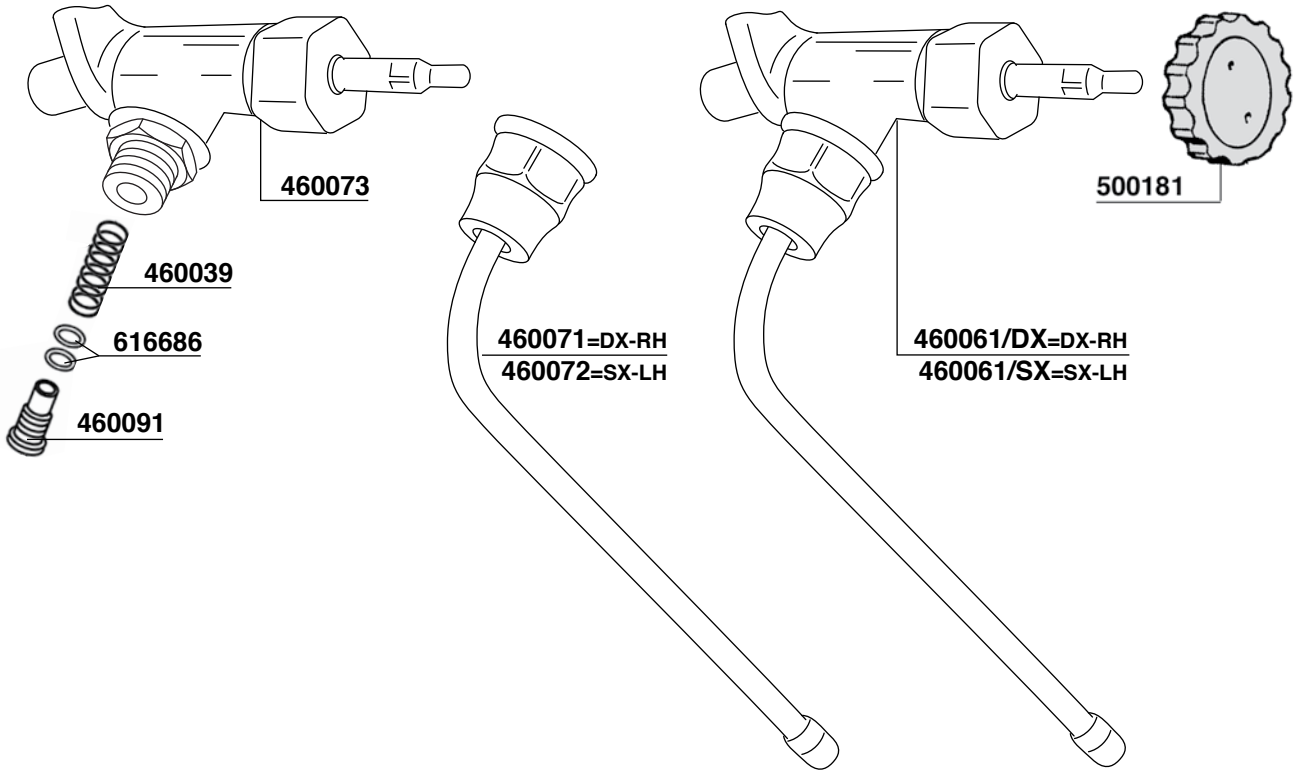

E61-ARIETE-ZODIACO

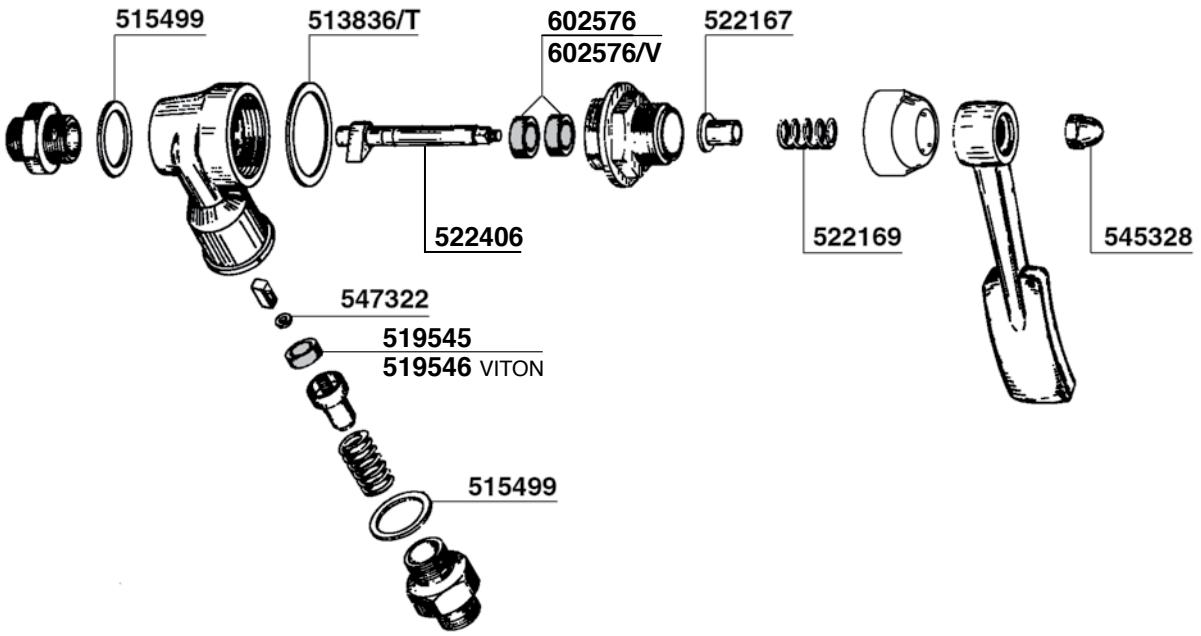

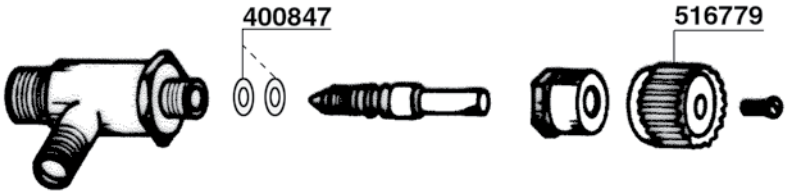

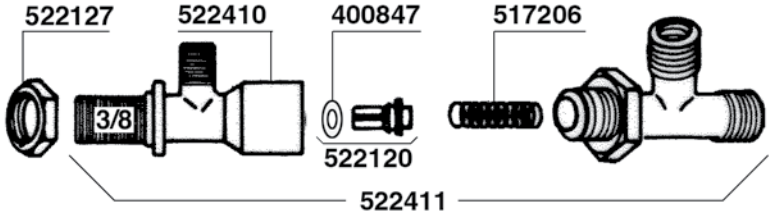

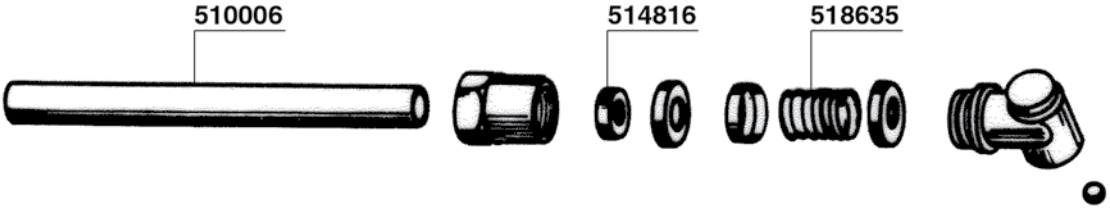

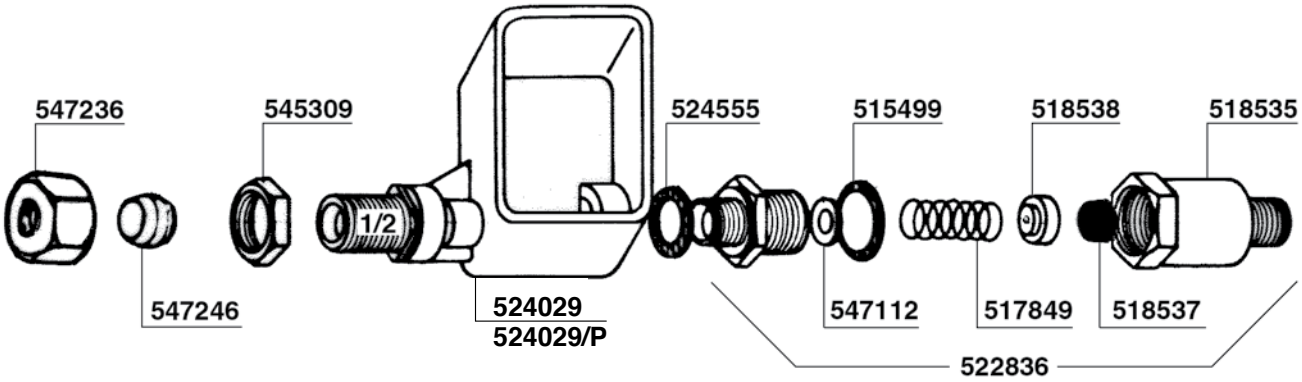

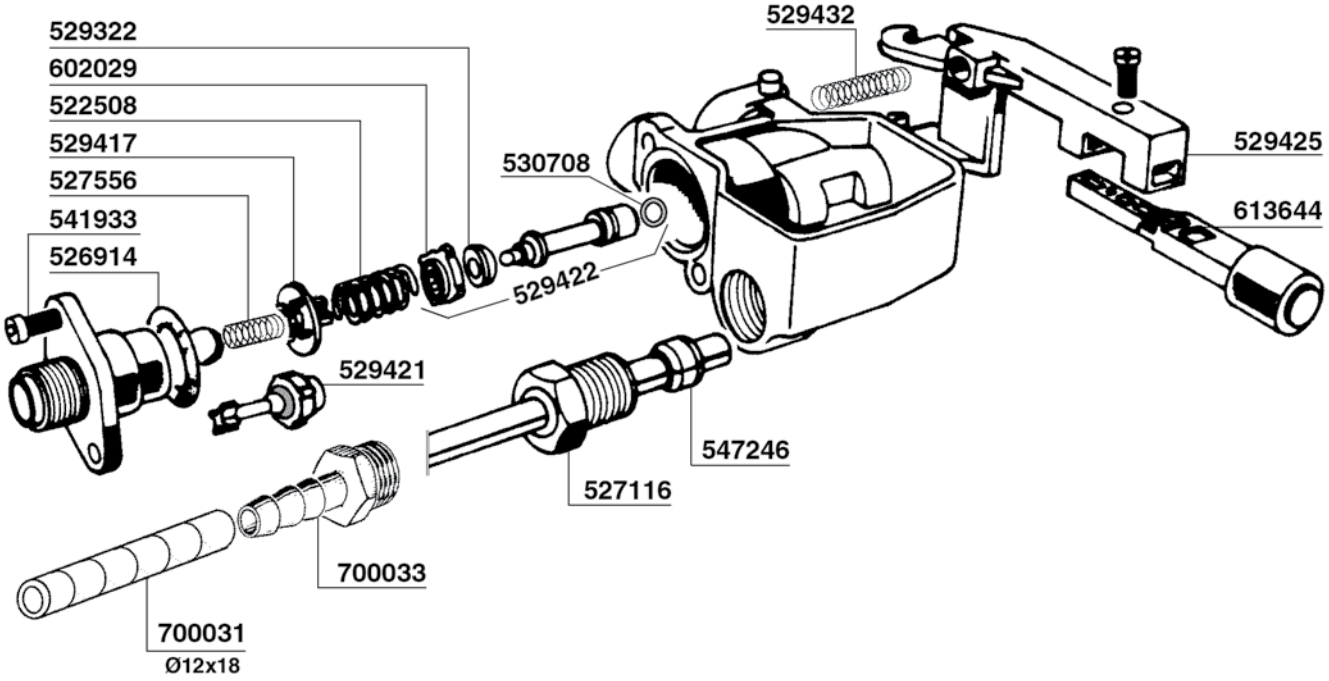
529322
602029
522508
529417
527556
541933
526914
529432
530708
529425
613644
529422
529421
547246
527116
700033
700031
Ø12x18

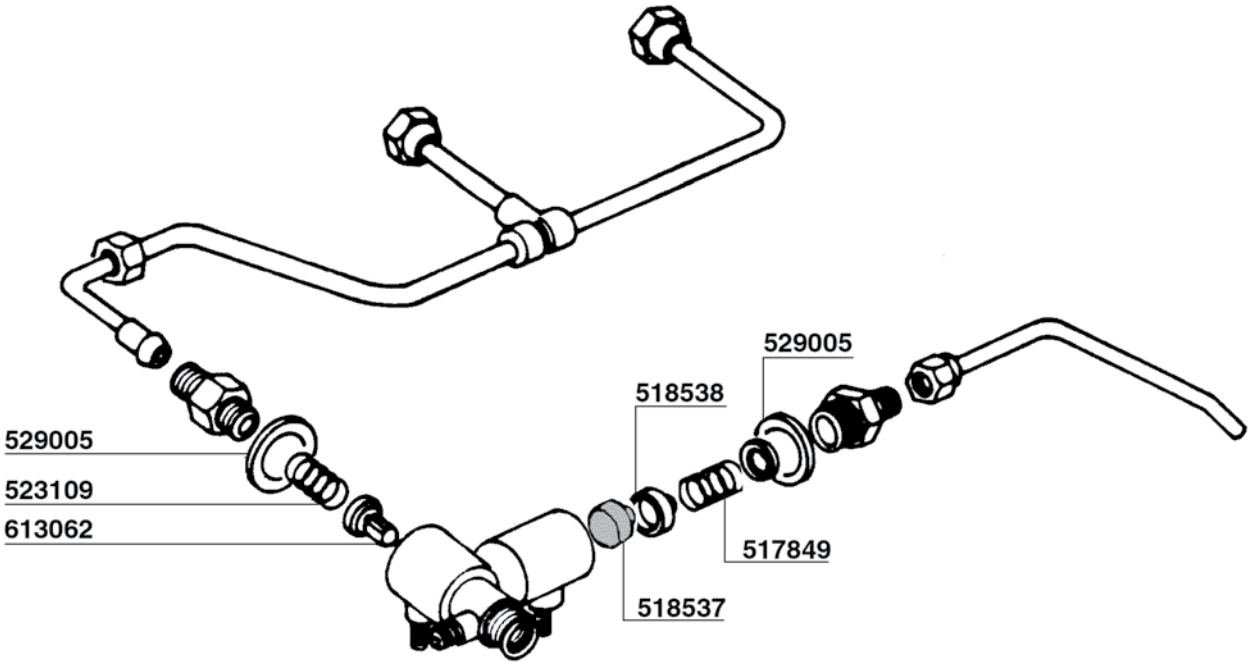
529005
523109
613062
518538
529005
517849
518537

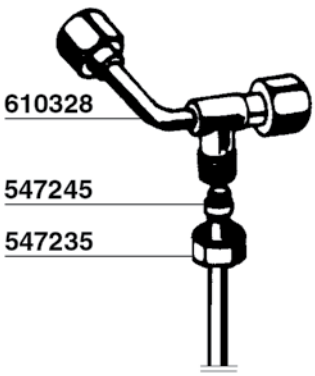
610328
547245
547235

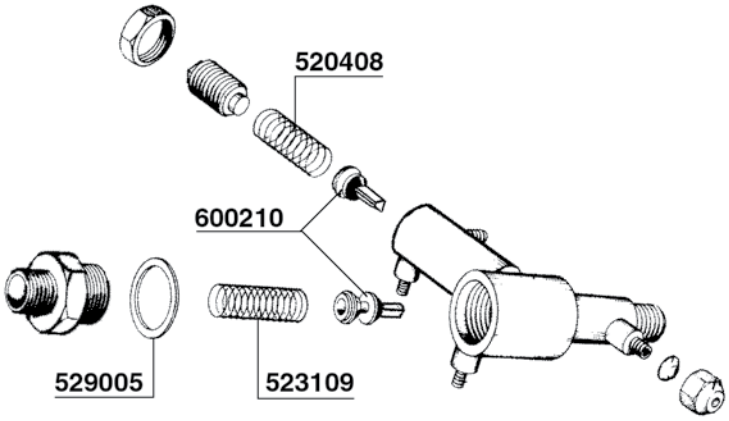
520408
600210
529005
523109

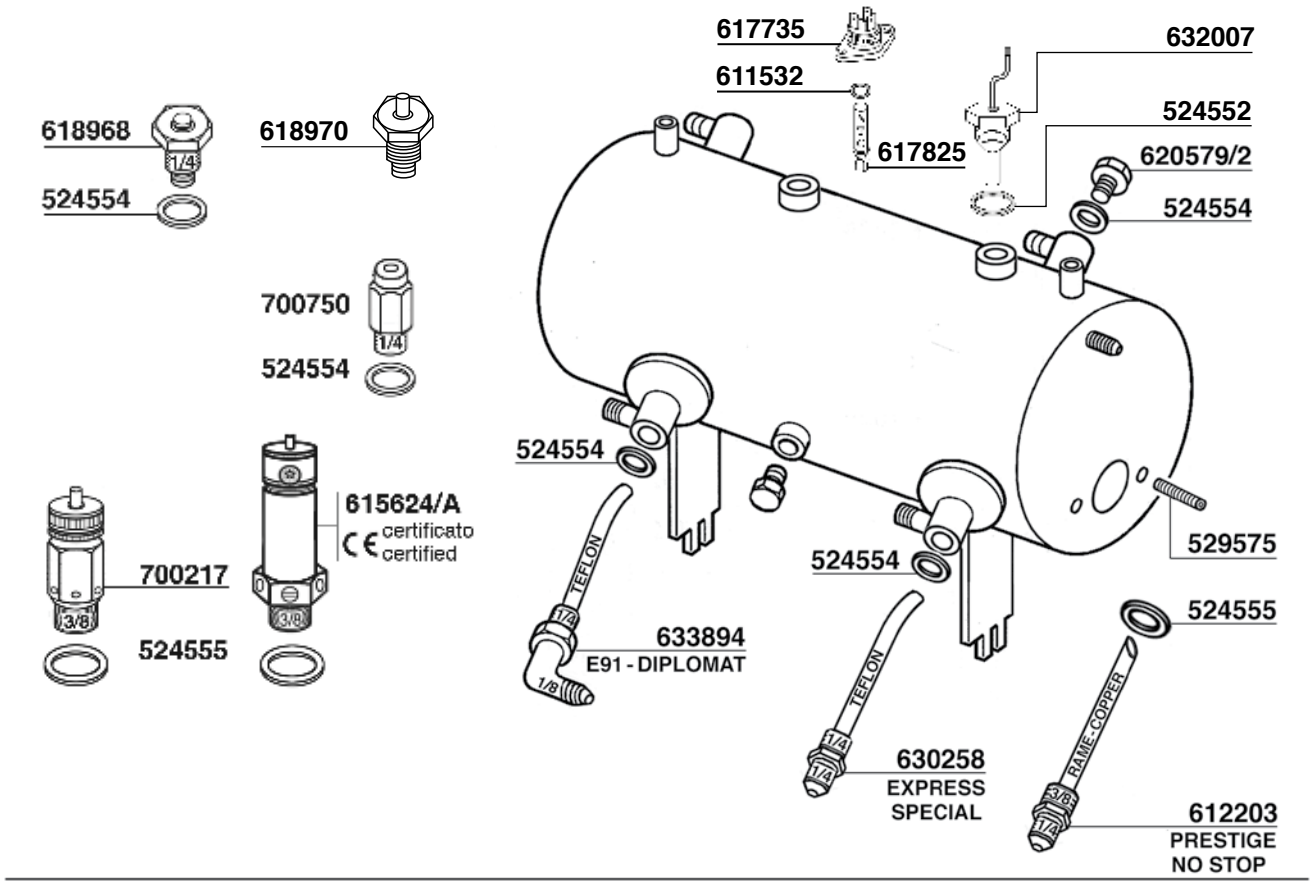
617735
611532
632007
524552
617825
620579/2
524554
618968
1/4
618970
524554
700750
1/4
524554
524554
615624/A
certificato
certified
700217
3/8
524555
3/8
TEFLON
1/4
633894
E91 - DIPLOMAT
1/8
524554
529575
524555
TEFLON
1/4
630258
EXPRESS
SPECIAL
1/4
RAME-COPPER
3/8
1/4
612203
PRESTIGE
NO STOP

COMPACT

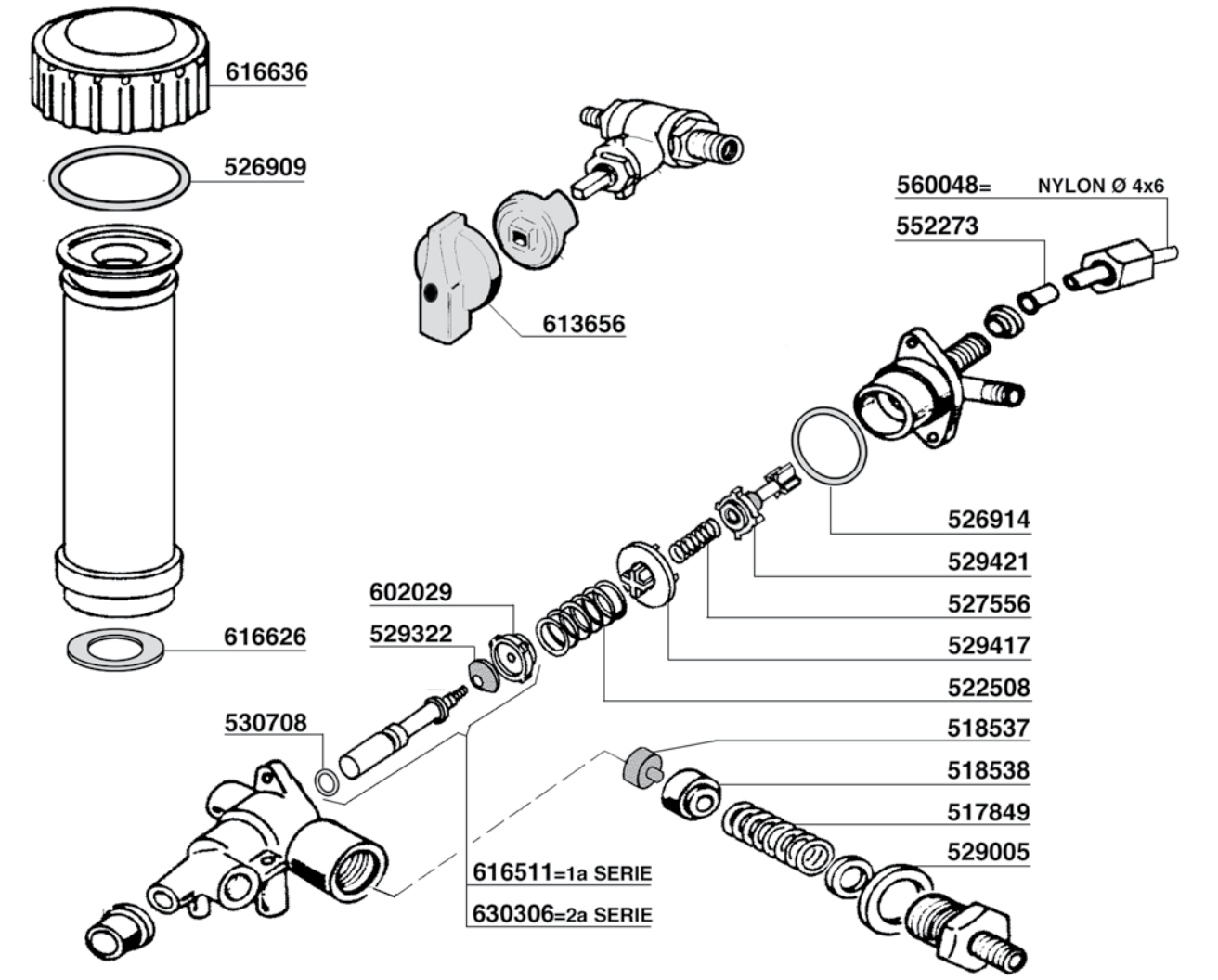
616636
526909
616626
613656
560048= NYLON Ø 4x6
552273
526914
529421
527556
529417
522508
518537
518538
517849
529005
602029
529322
530708
616511=1a SERIE
630306=2a SERIE

E61-ARIETE-ZODIACO

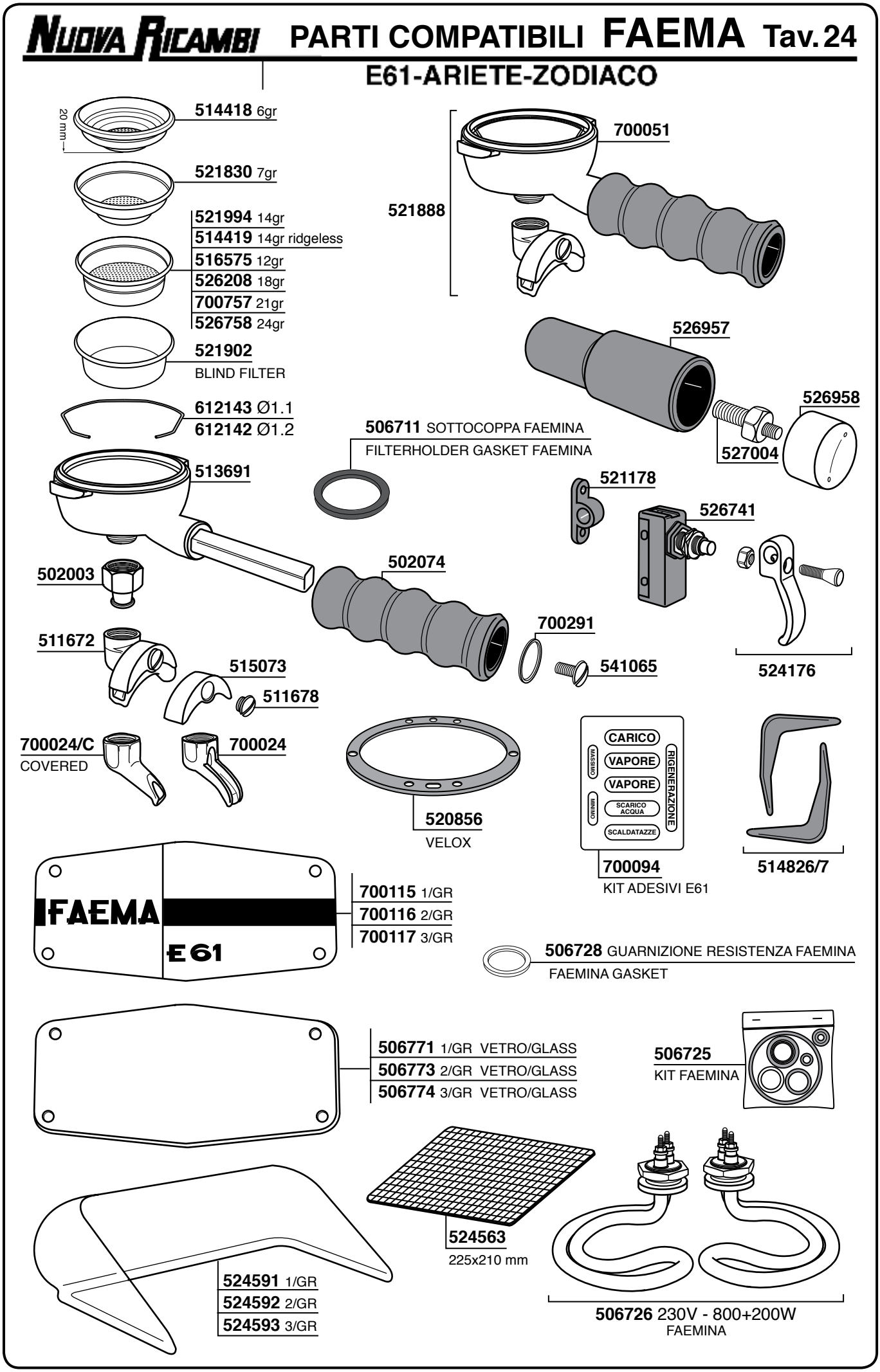

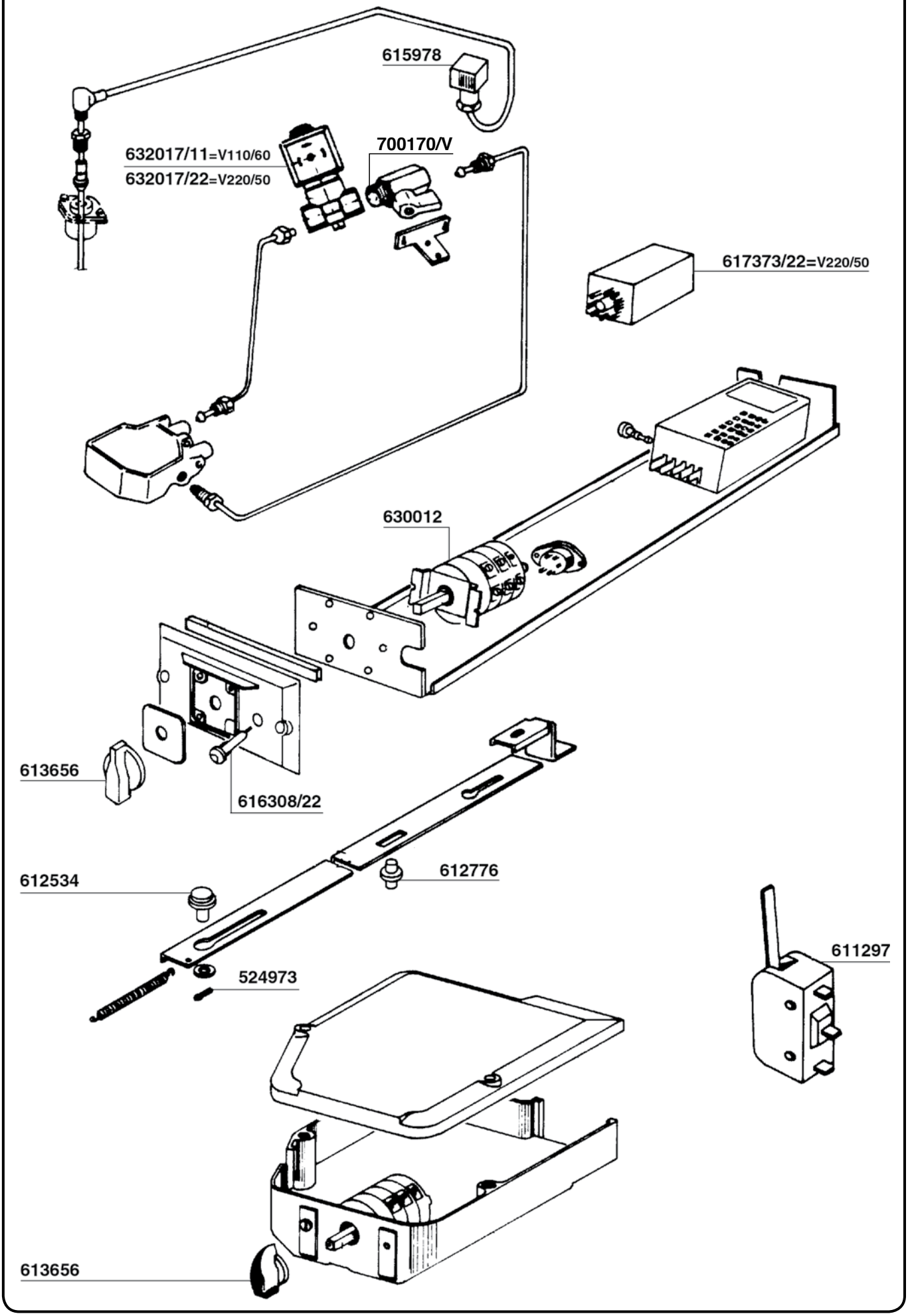
615978
632017/11=V110/60
632017/22=V220/50
700170/V
617373/22=V220/50
630012
613656
616308/22
612534
612776
611297
524973
613656

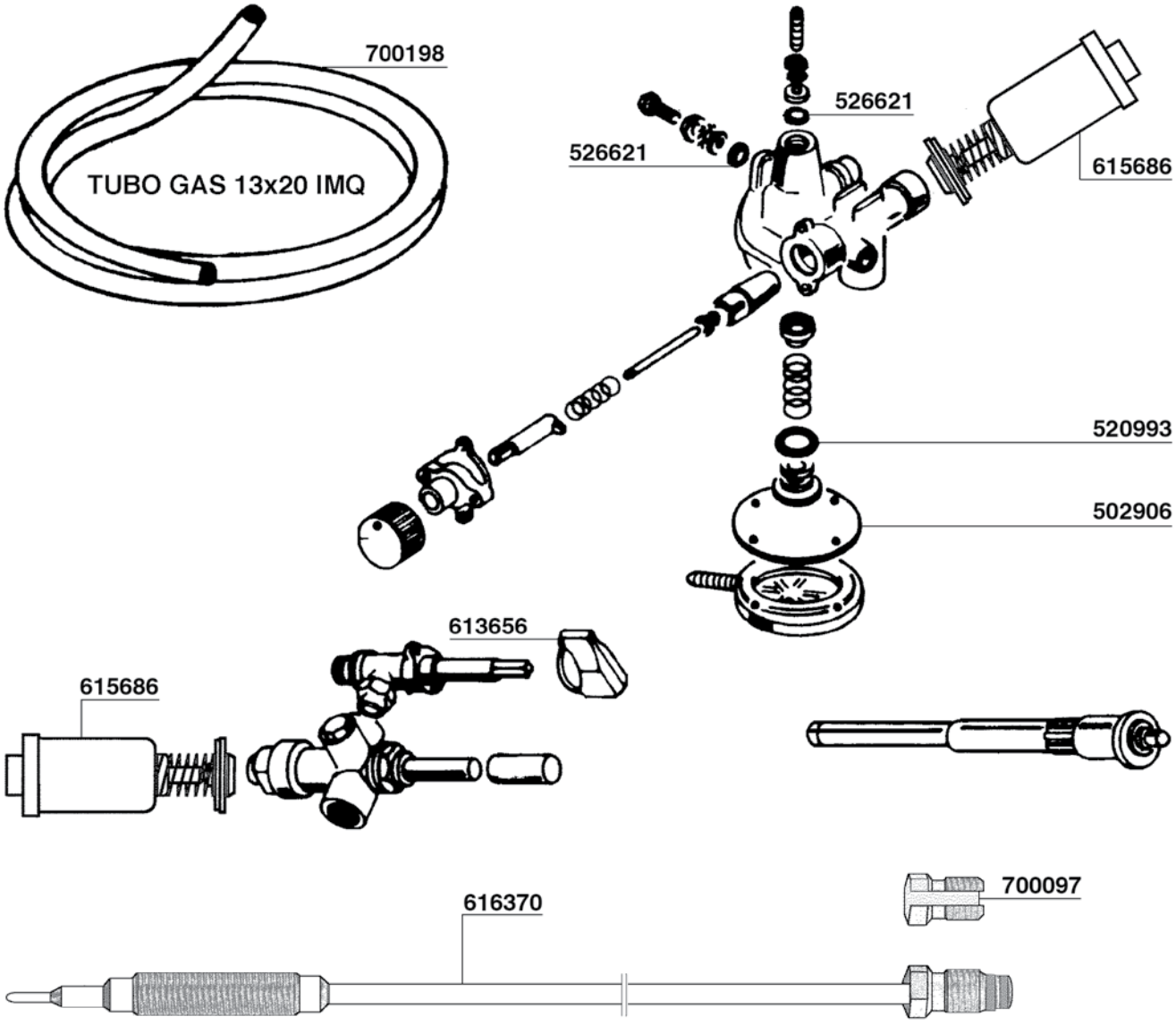
700198
TUBO GAS 13x20 IMQ
526621
526621
615686
520993
502906
613656
615686
616370
700097

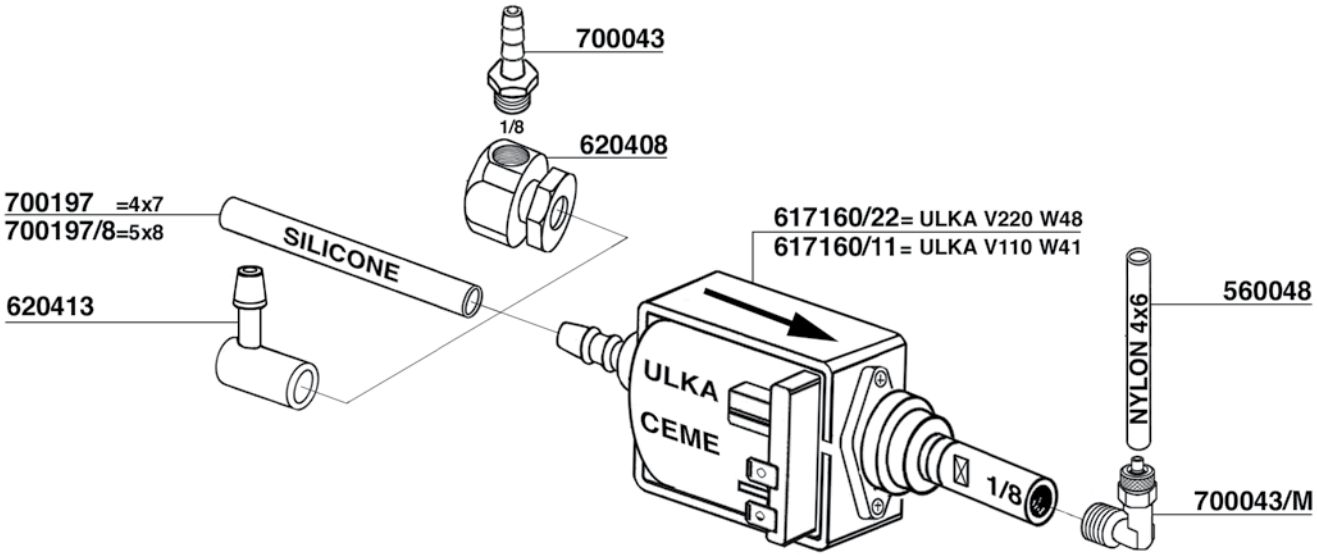
700043
1/8
620408
700197 =4x7
700197/8=5x8
SILICONE
620413
617160/22= ULKA V220 W48
617160/11= ULKA V110 W41
ULKA
CEME
1/8
NYLON 4x6
560048
700043/M

601624

542794

601636

529575

618970

618968

524554

700750

524554

700217

615624/A
CE certificato certified

524555

LIVELLO

518825=12FORI E61
603302=16FORI ARIETE

603778
16FORI ARIETE

603300
16FORI ARIETE

603375
16FORI ARIETE

RESISTENZA

523913
12FORI E61

519205=12FORI E61
519205/T=12FORI E61 TEFLON

518824
12FORI E61

518826
12FORI E61

BOILER RAME E61
E61 COPPER BOILER

591201 =GR1
591202 =GR2
591203 =GR3

616597 CE/UL

700124
Ø55mm

MANOMETRI

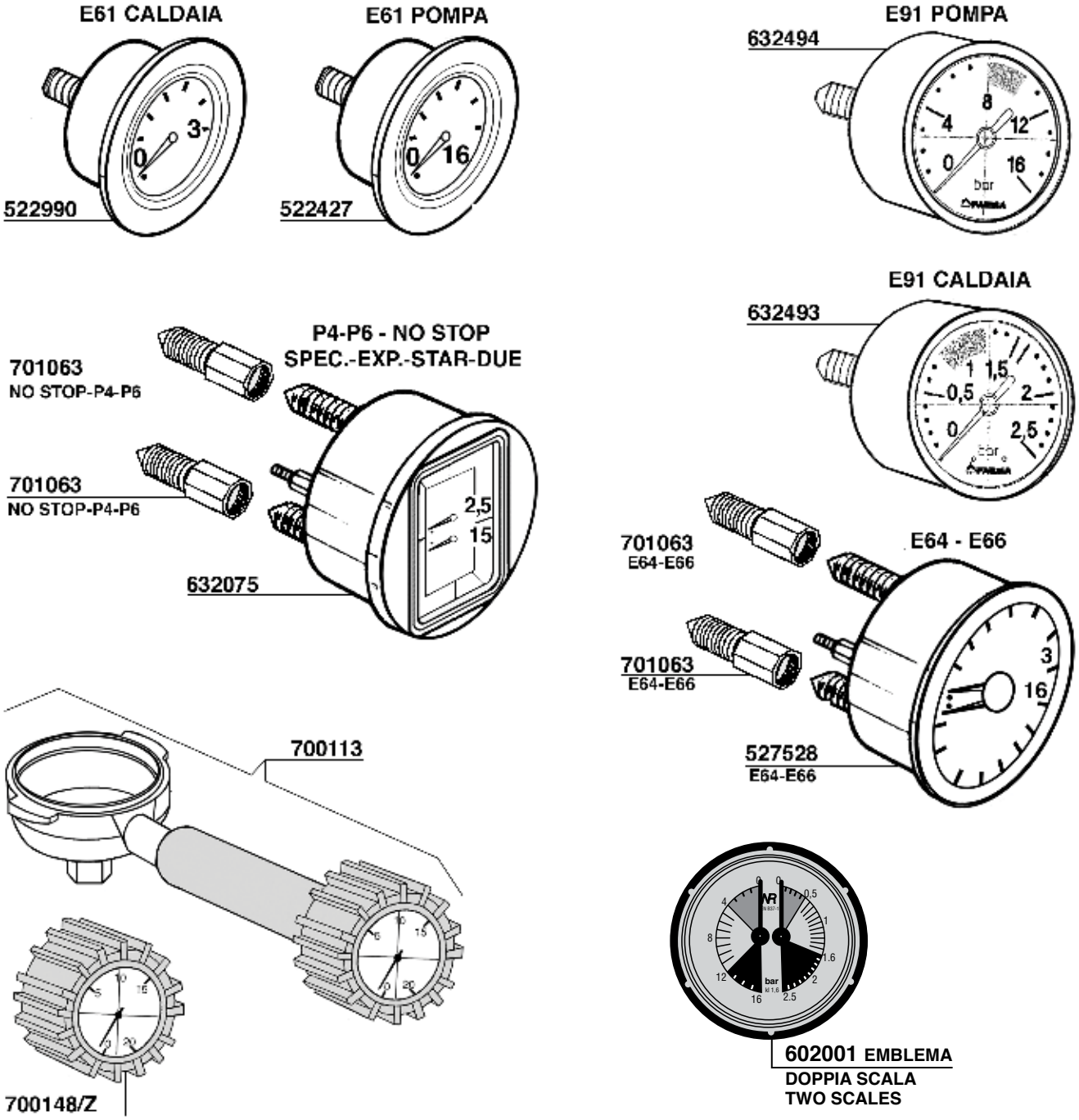
E61 CALDAIA
522990
E61 POMPA
522427
E91 POMPA
632494
E91 CALDAIA
632493
P4-P6 - NO STOP
SPEC.-EXP.-STAR-DUE
701063
NO STOP-P4-P6
701063
NO STOP-P4-P6
632075
701063
E64-E66
E64 - E66
701063
E64-E66
527528
E64-E66
700113
700148/Z
602001 EMBLEMA
DOPPIA SCALA
TWO SCALES

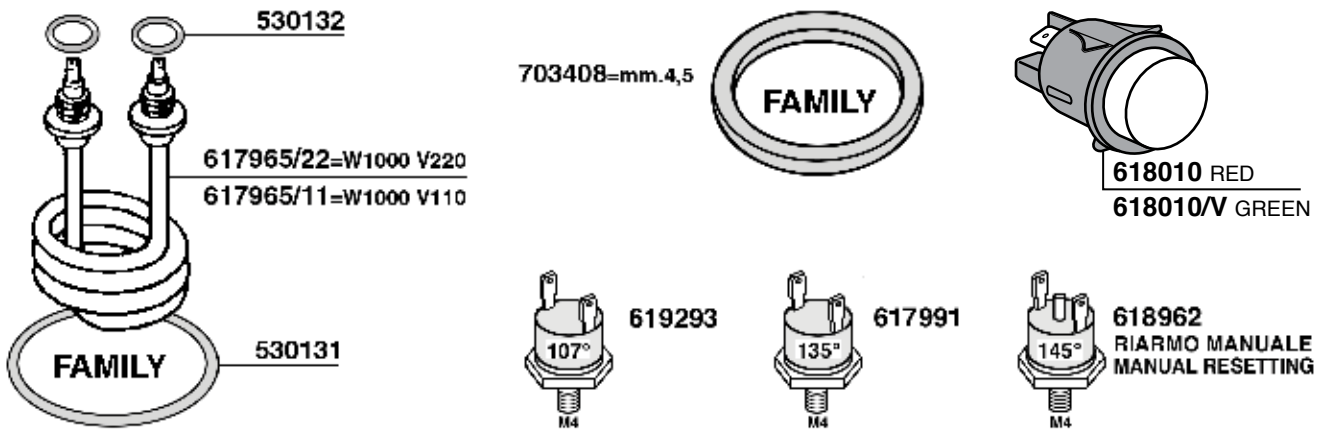
530132
617965/22=W1000 V220
617965/11=W1000 V110
FAMILY
530131
703408=mm.4,5
FAMILY
618010 RED
618010/V GREEN
107°
M4
619293
135°
M4
617991
145°
M4
618962
RIARMO MANUALE
MANUAL RESETTING

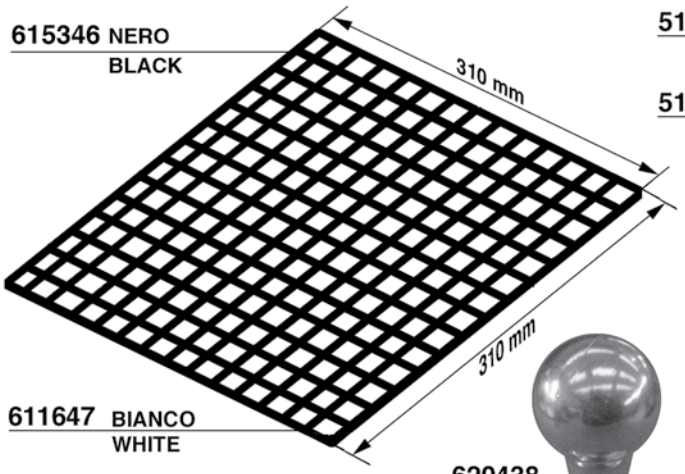

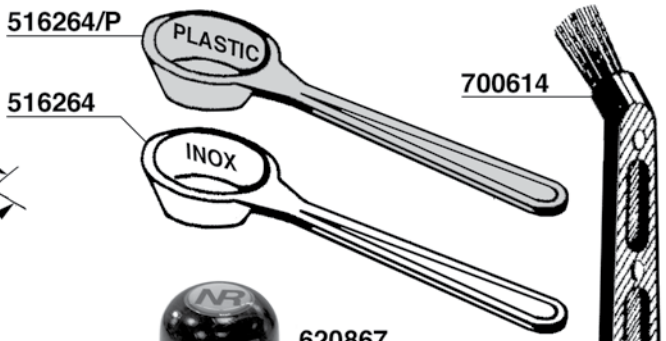

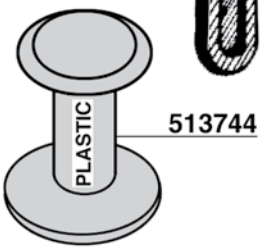

GOMMA NERA-BLACK RUBBER

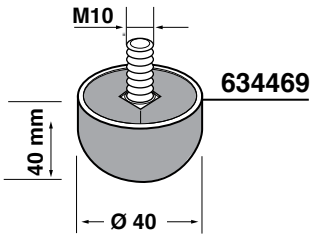

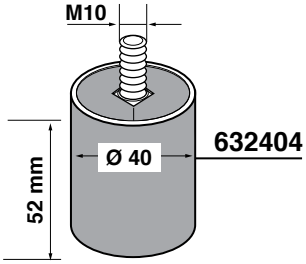

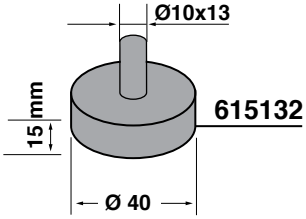

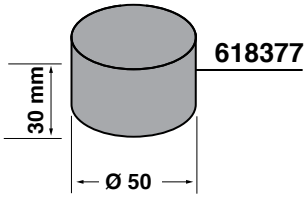

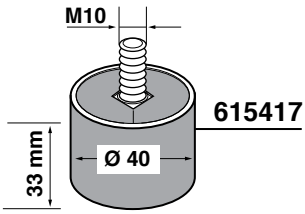

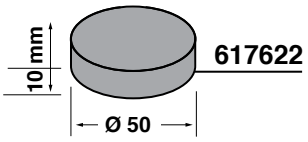

PLASTICA NERA-BLACK PLASTIC

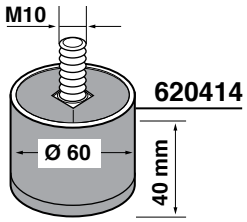

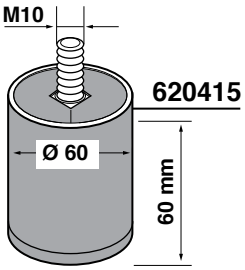

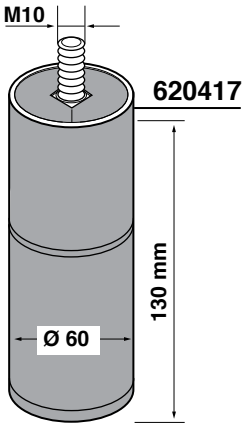

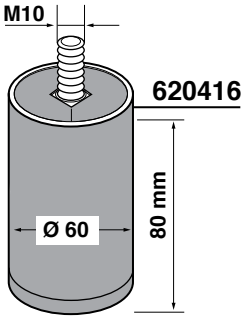

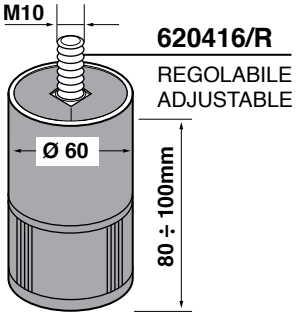

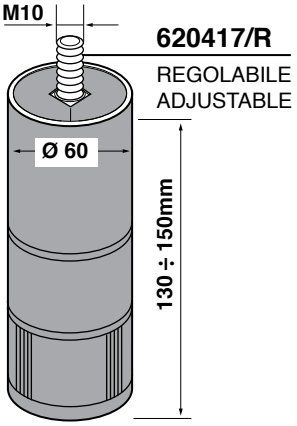

RESISTENZE

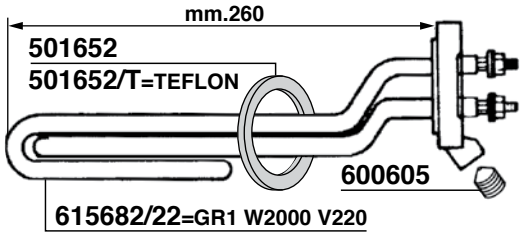
mm.260
501652
501652/T=TEFLON
600605
615682/22=GR1 W2000 V220

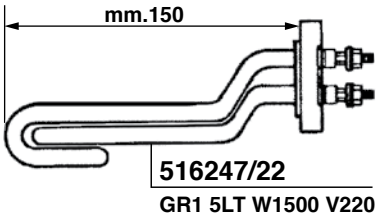
mm.150
516247/22
GR1 5LT W1500 V220

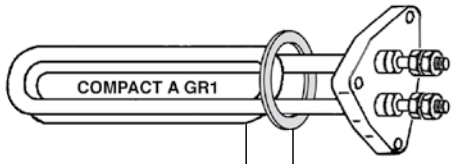
COMPACT A GR1
618963/22=1500W 220 V
618963/11=1300W 110 V
400826/T

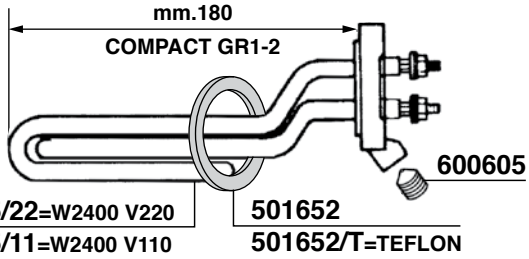
mm.180
COMPACT GR1-2
600605
616635/22=W2400 V220
616635/11=W2400 V110
501652
501652/T=TEFLON

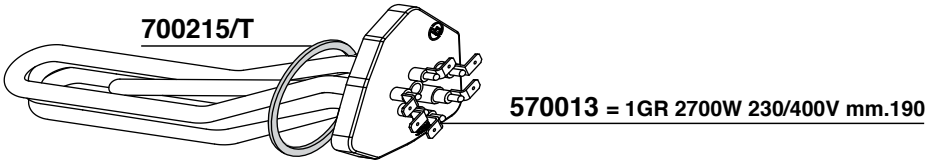
700215/T
570013 = 1GR 2700W 230/400V mm.190

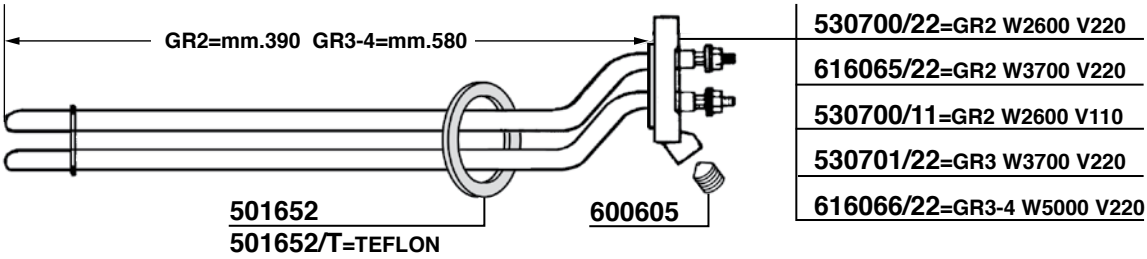
GR2=mm.390 GR3-4=mm.580
530700/22=GR2 W2600 V220
616065/22=GR2 W3700 V220
530700/11=GR2 W2600 V110
530701/22=GR3 W3700 V220
616066/22=GR3-4 W5000 V220
501652
501652/T=TEFLON
600605

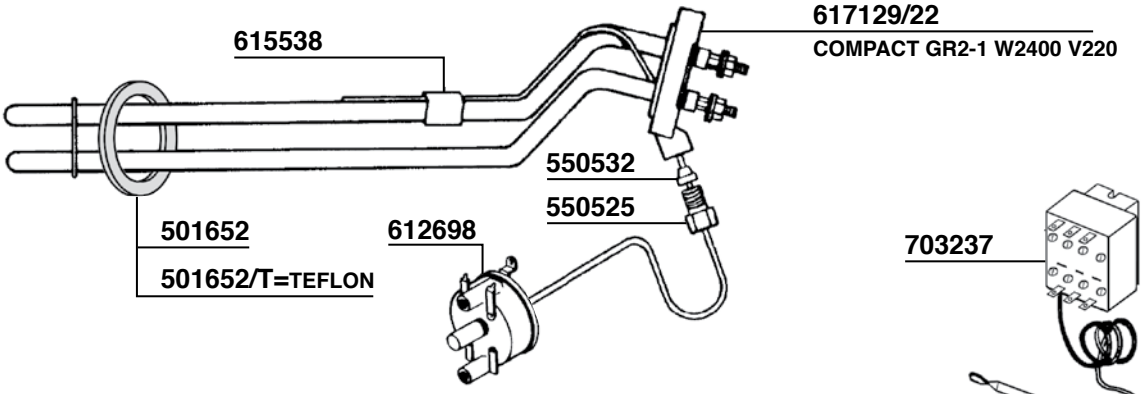
617129/22
COMPACT GR2-1 W2400 V220
615538
550532
550525
501652
501652/T=TEFLON
612698
703237

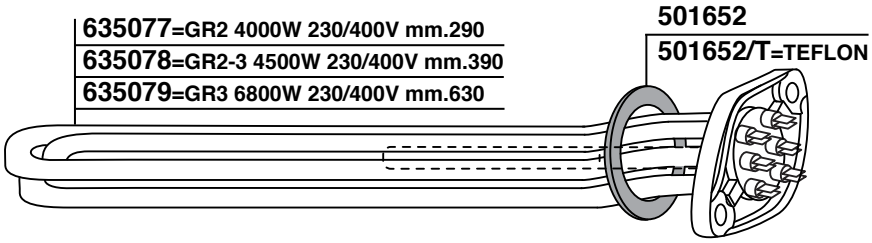
635077=GR2 4000W 230/400V mm.290
635078=GR2-3 4500W 230/400V mm.390
635079=GR3 6800W 230/400V mm.630
501652
501652/T=TEFLON

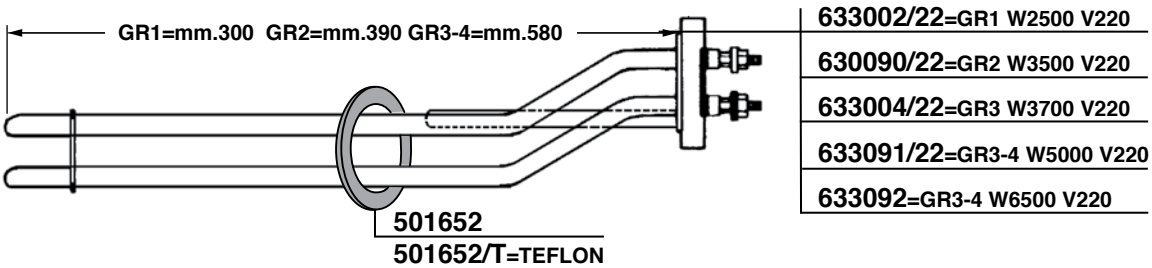
GR1=mm.300 GR2=mm.390 GR3-4=mm.580
633002/22=GR1 W2500 V220
630090/22=GR2 W3500 V220
633004/22=GR3 W3700 V220
633091/22=GR3-4 W5000 V220
633092=GR3-4 W6500 V220
501652
501652/T=TEFLON

ELETTROPOMPE

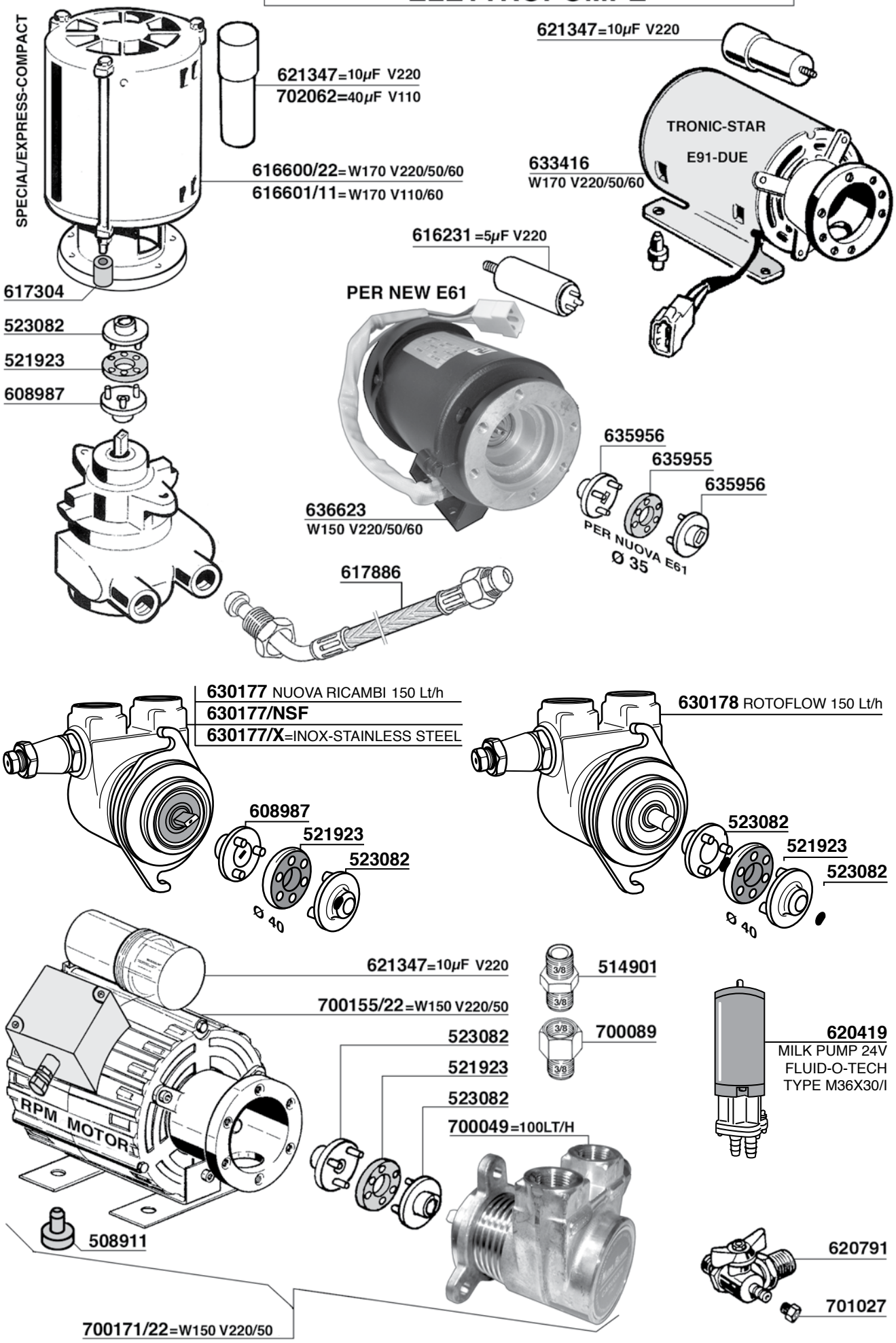

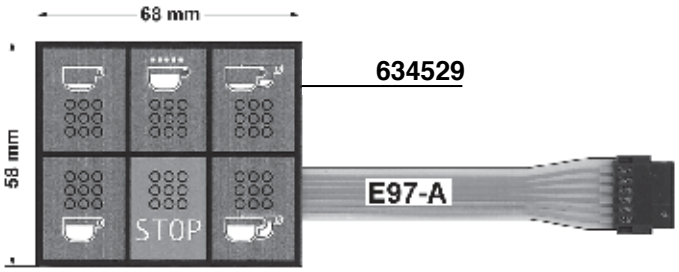

634529

632842

GRIGIO - GREY

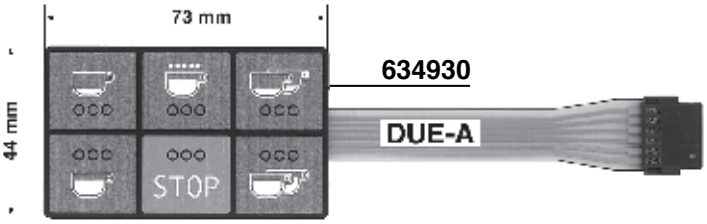

634930

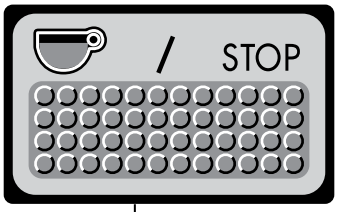

619002

DUE/SMART - S

634927

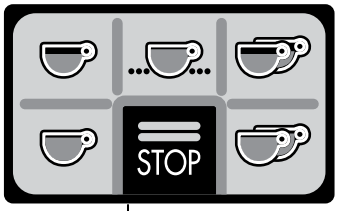

619003

DUE/SMART - A

591540

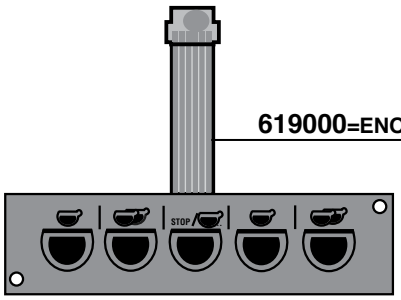

619000=ENOVA/A

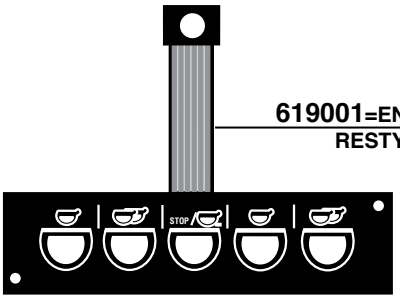

619001=ENOVA RESTYLING

619005

ENOVA S

619006

E98 RE

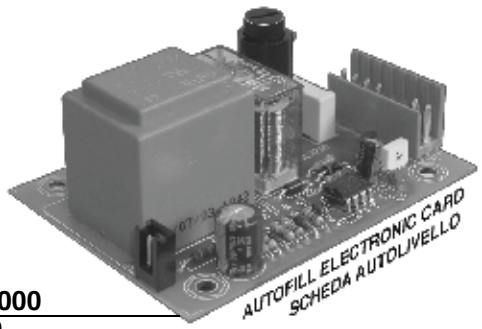

591000

V220

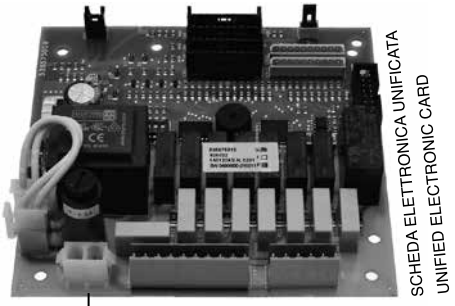

591549

DUE-DUE SMART-E61 JUBILE'-E91-E92 COMPACT-E97 STYLEMA - E98 PRESIDENT/A

FC 31 MINERVA-TOSTAPANE EGI

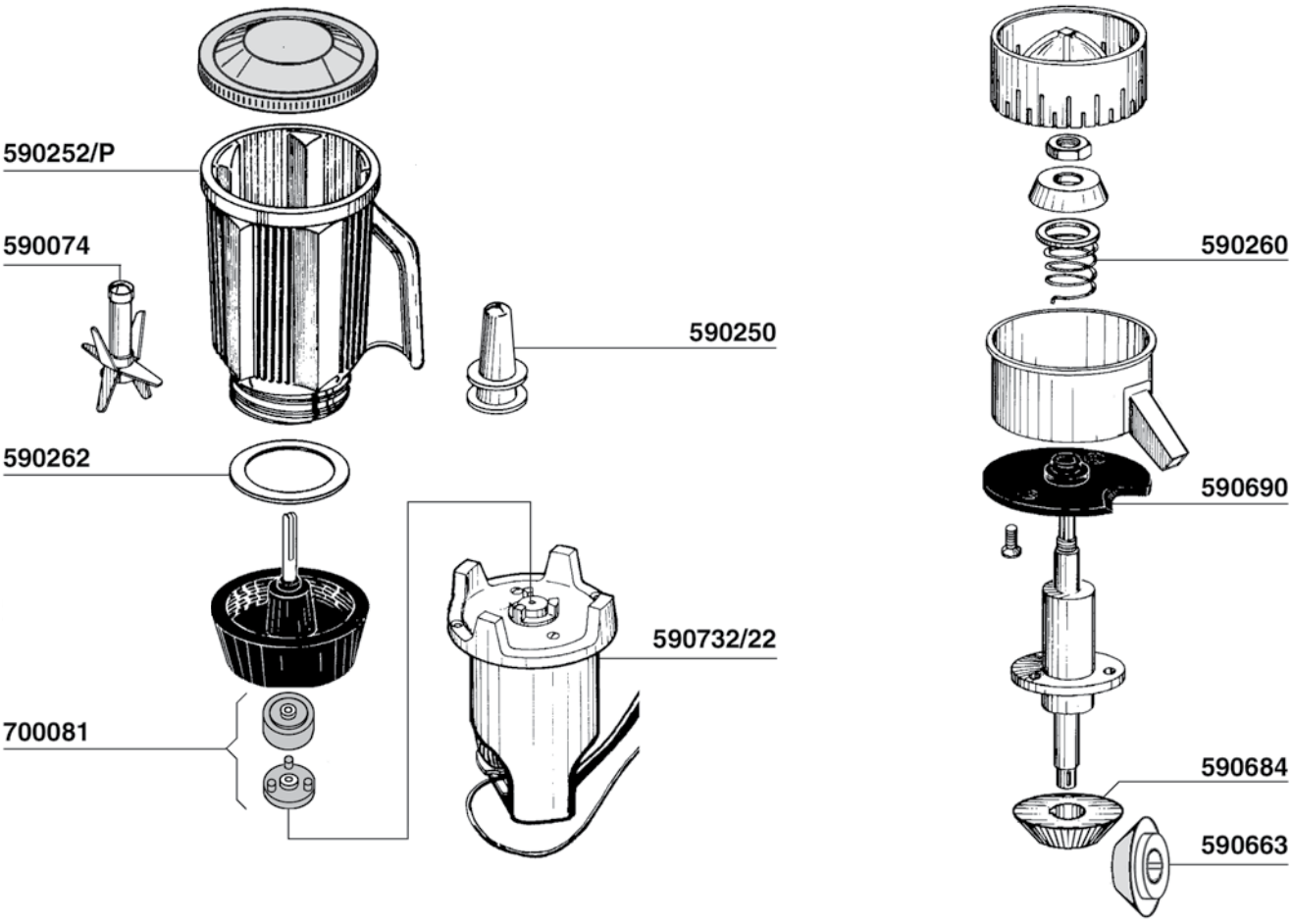

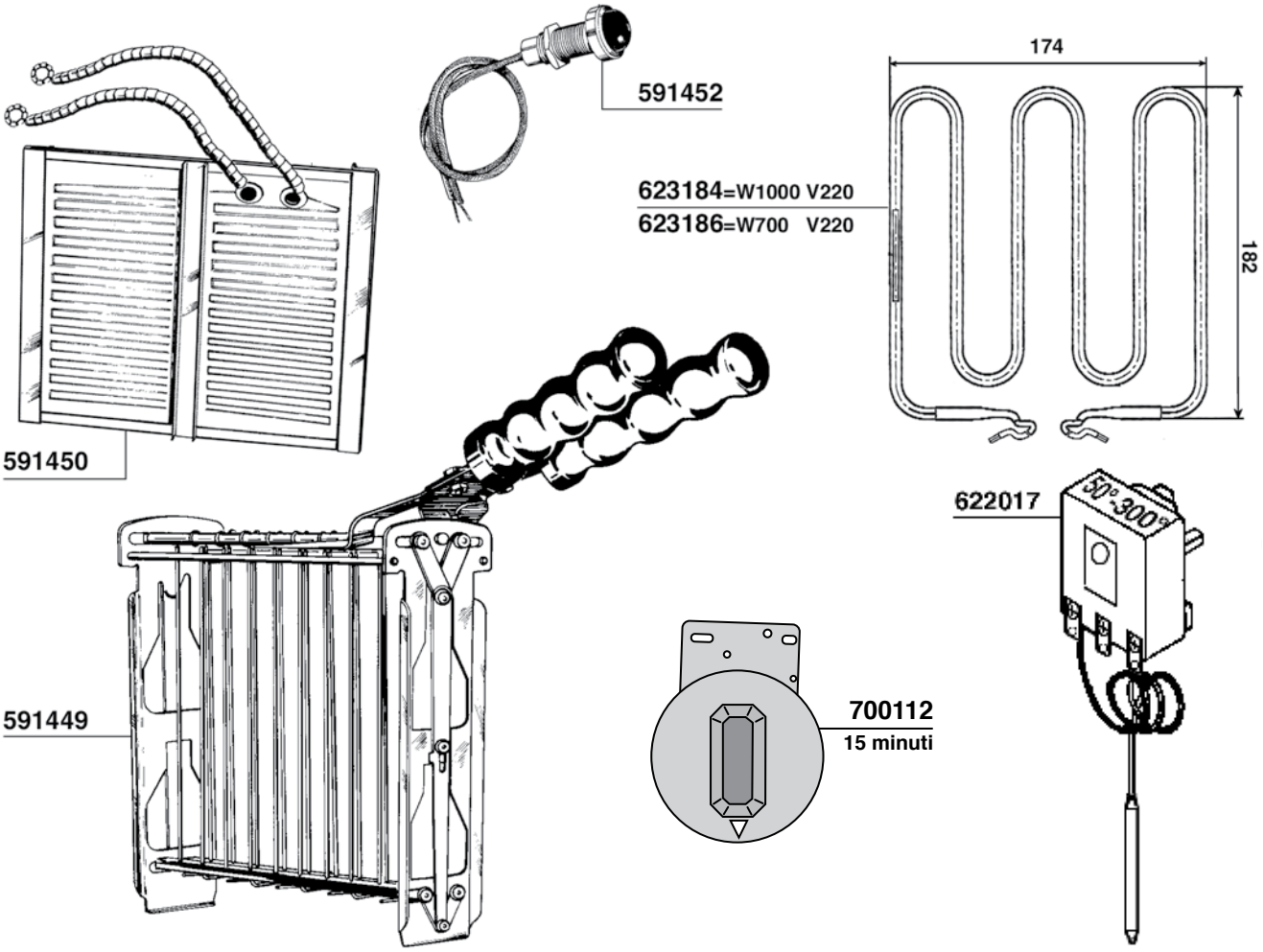

FIAMMA RST

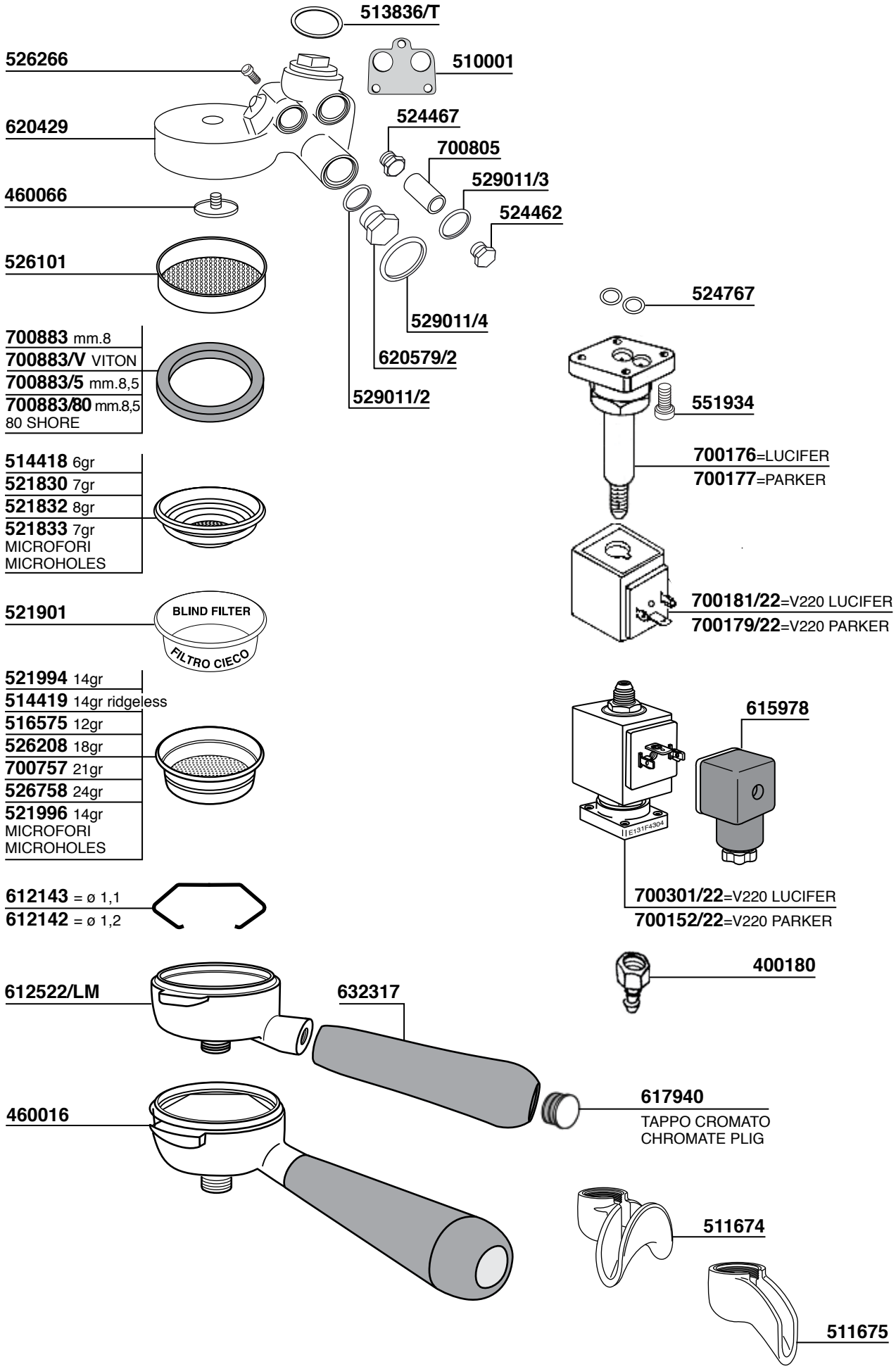
513836/T
526266
510001
620429
524467
700805
529011/3
460066
524462
526101
524767
529011/4
700883 mm.8
700883/V VITON
700883/5 mm.8,5
700883/80 mm.8,5
80 SHORE
620579/2
529011/2
551934
700176=LUCIFER
700177=PARKER
514418 6gr
521830 7gr
521832 8gr
521833 7gr
MICROFORI
MICROHOLES
700181/22=V220 LUCIFER
700179/22=V220 PARKER
521901
BLIND FILTER
FILTRO CIECO
521994 14gr
514419 14gr ridgeless
516575 12gr
526208 18gr
700757 21gr
526758 24gr
521996 14gr
MICROFORI
MICROHOLES
615978
E131F4304
612143 = ø 1,1
612142 = ø 1,2
700301/22=V220 LUCIFER
700152/22=V220 PARKER
400180
612522/LM
632317
617940
TAPPO CROMATO
CHROMATE PLIG
460016
511674
511675

FIAMMA RST

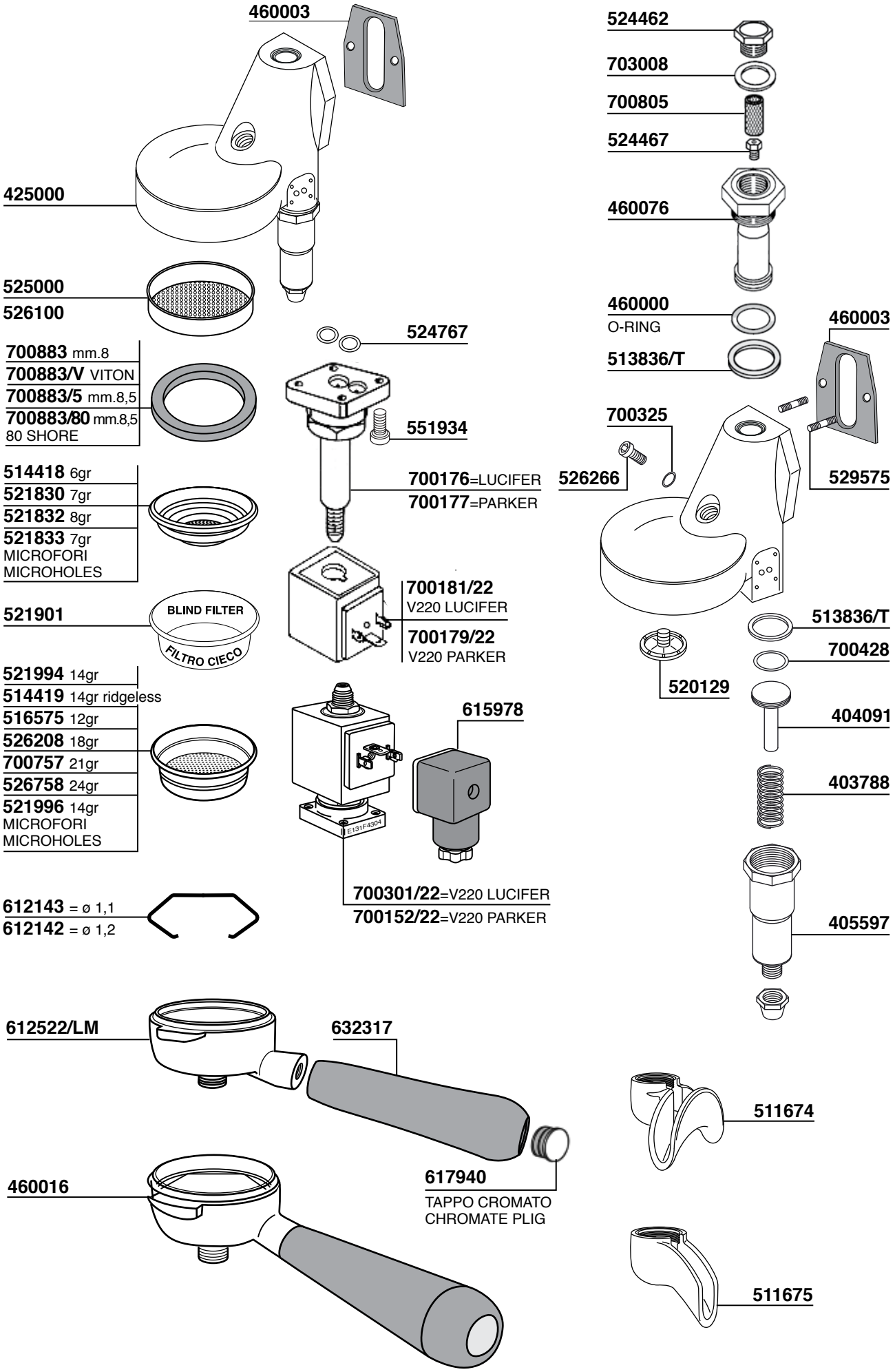
460003
425000
525000
526100
700883 mm.8
700883/V VITON
700883/5 mm.8,5
700883/80 mm.8,5
80 SHORE
514418 6gr
521830 7gr
521832 8gr
521833 7gr
MICROFORI
MICROHOLES
521901
BLIND FILTER
FILTRO CIECO
521994 14gr
514419 14gr ridgeless
516575 12gr
526208 18gr
700757 21gr
526758 24gr
521996 14gr
MICROFORI
MICROHOLES
612143 = ø 1,1
612142 = ø 1,2
524767
551934
700176=LUCIFER
700177=PARKER
700181/22
V220 LUCIFER
700179/22
V220 PARKER
615978
E131F4304
700301/22=V220 LUCIFER
700152/22=V220 PARKER
524462
703008
700805
524467
460076
460000
O-RING
513836/T
460003
700325
526266
529575
513836/T
700428
520129
404091
403788
405597
612522/LM
632317
617940
TAPPO CROMATO
CHROMATE PLIG
460016
511674
511675

FIAMMA RST

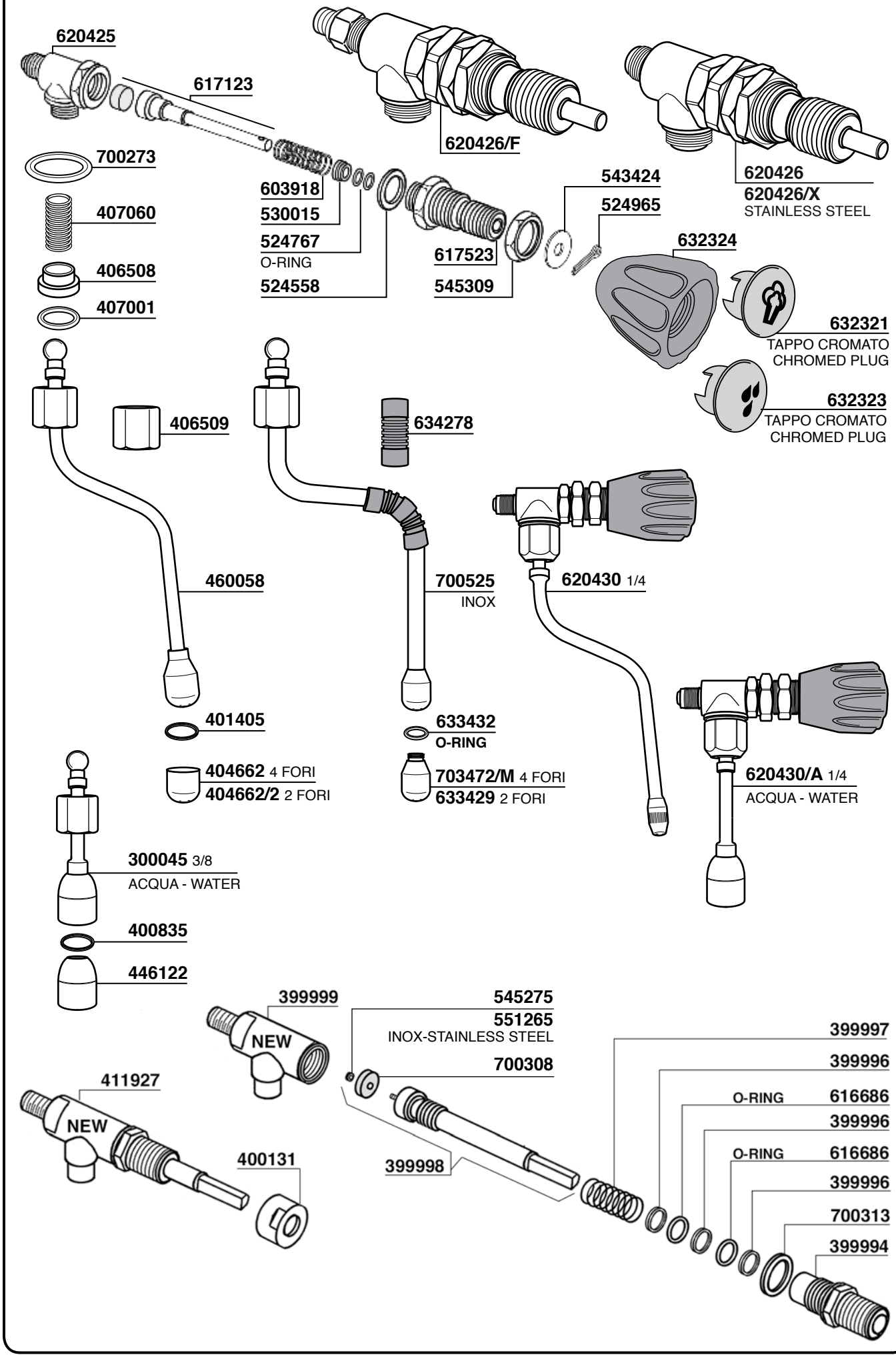
620425
617123
620426/F
620426
620426/X
STAINLESS STEEL
700273
407060
406508
407001
603918
530015
524767
O-RING
524558
617523
545309
543424
524965
632324
632321
TAPPO CROMATO
CHROMED PLUG
632323
TAPPO CROMATO
CHROMED PLUG
406509
634278
460058
700525
INOX
620430 1/4
401405
633432
O-RING
404662 4 FORI
404662/2 2 FORI
703472/M 4 FORI
633429 2 FORI
620430/A 1/4
ACQUA - WATER
300045 3/8
ACQUA - WATER
400835
446122
399999
NEW
545275
551265
INOX-STAINLESS STEEL
700308
411927
NEW
400131
399998
399997
399996
O-RING
616686
399996
O-RING
616686
399996
700313
399994

FIAMMA RST

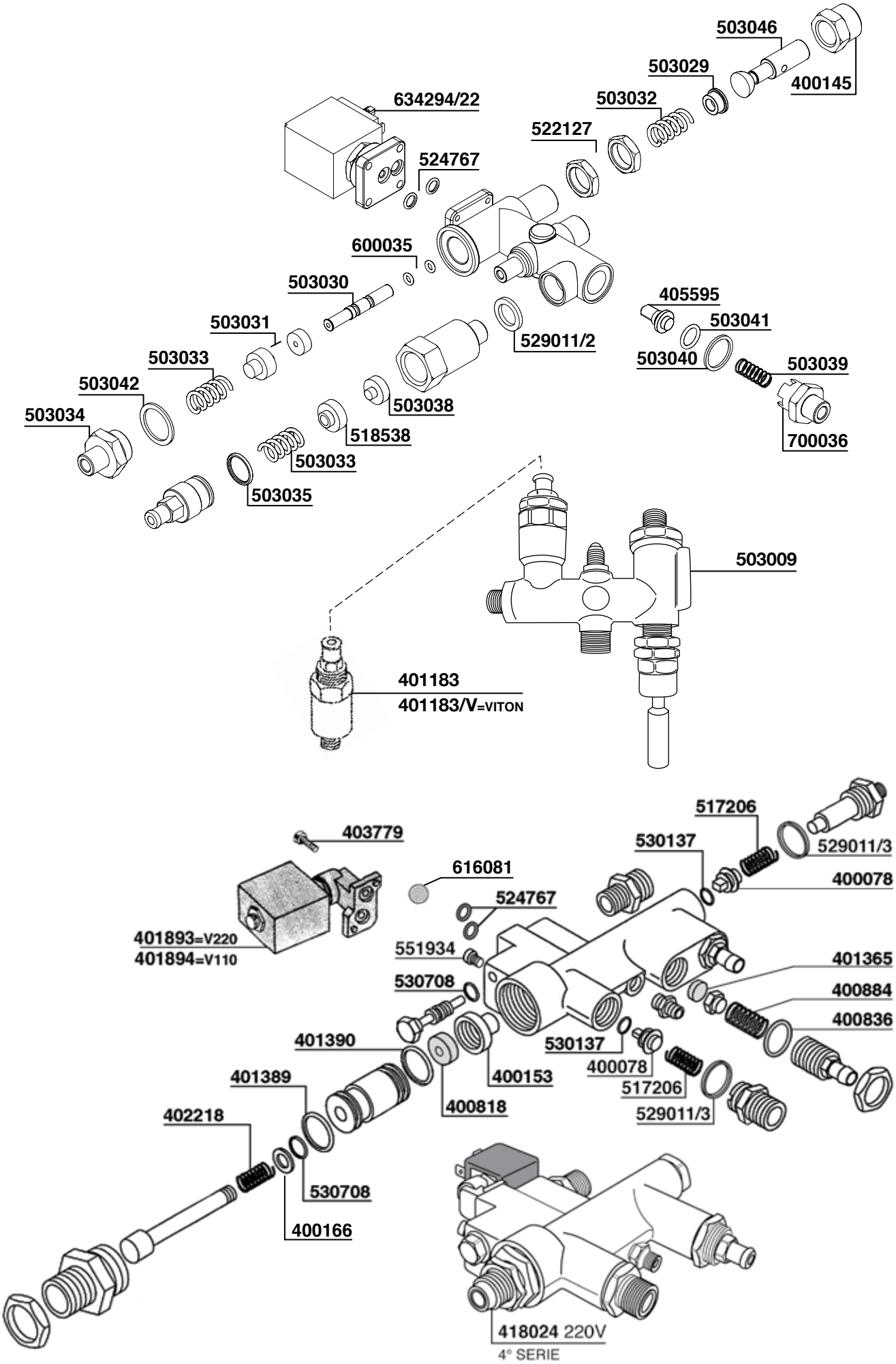
503046
400145
503029
503032
634294/22
522127
524767
600035
503030
405595
503041
503031
529011/2
503040
503039
503033
503042
503038
503034
518538
700036
503033
503035
503009
401183
401183/V=VITON
517206
403779
530137
529011/3
616081
400078
524767
401893=V220
401894=V110
551934
401365
530708
400884
400836
401390
530137
400078
400153
517206
401389
400818
529011/3
402218
530708
400166
418024 220V
4° SERIE

FIAMMA RST

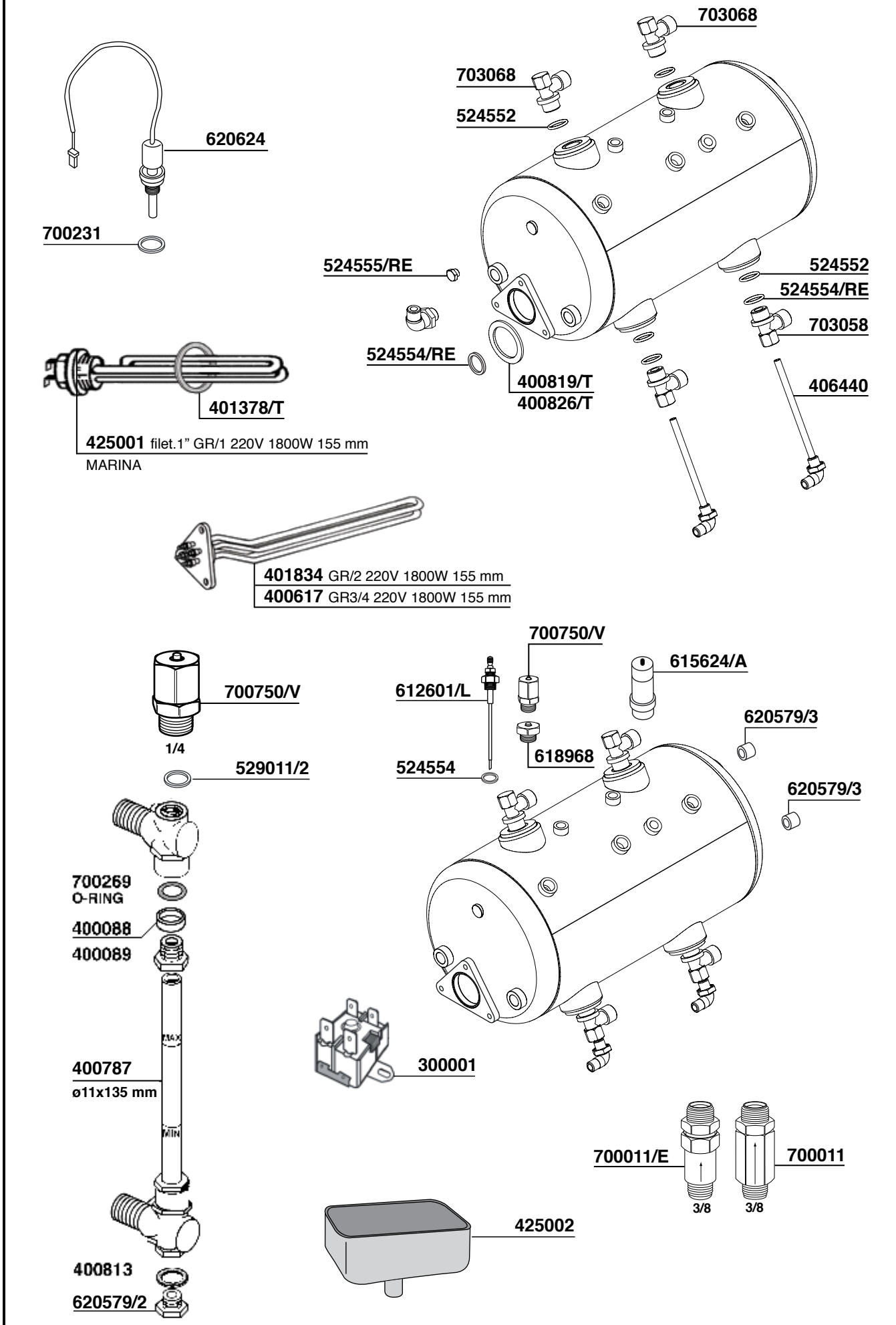
703068
703068
524552
620624
700231
524555/RE
524552
524554/RE
703058
524554/RE
400819/T
400826/T
406440
401378/T
425001 filet.1" GR/1 220V 1800W 155 mm
MARINA
401834 GR/2 220V 1800W 155 mm
400617 GR3/4 220V 1800W 155 mm
700750/V
615624/A
700750/V
612601/L
620579/3
1/4
618968
529011/2
524554
620579/3
700269
O-RING
400088
400089
MAX
400787
ø11x135 mm
MIN
300001
700011/E
700011
3/8
3/8
425002
400813
620579/2

621347
CAPACITOR
CONDENSAT.
10 µF

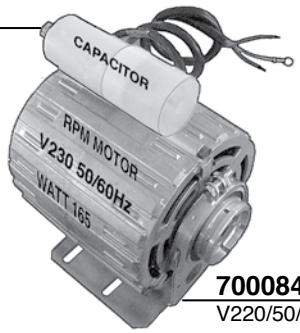

700084/22
V220/50/60 W165

700086/22 = V220/50/60 W150
621112 = 6,3 µF 220V

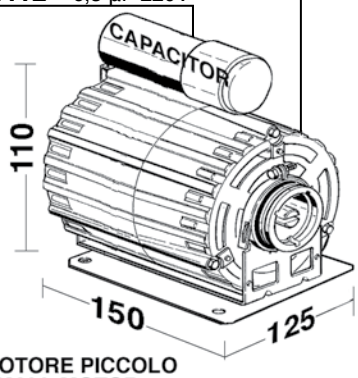

MOTORE PICCOLO
SMALL MOTOR

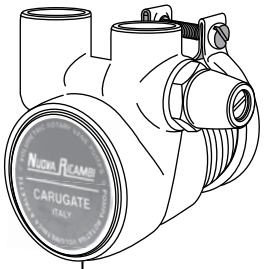

700048
100 Lt/h

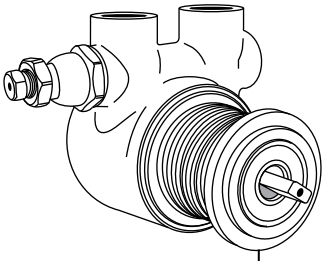

620406
ROTOFLOW 150 Lt/h
620406/X INOX

700042

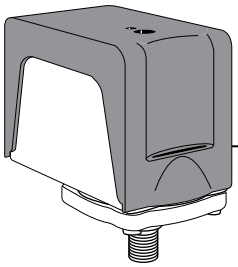

616597

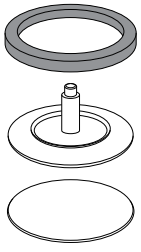

700124

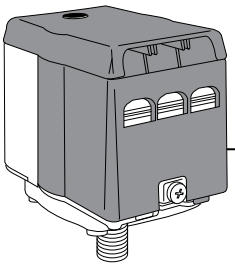

616592

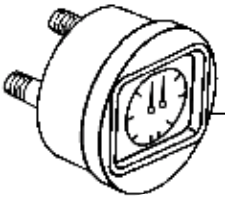

400737
BAR-CENTURY

BOILER

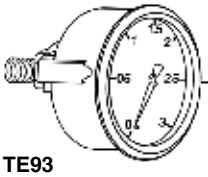

700594/T
Ø40mm.

TE93

POMPA

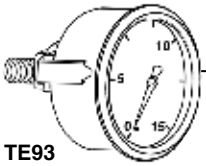

700595/T
Ø40mm.

TE93

FIAMMA RST

620405/C

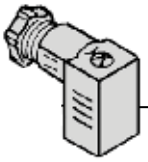

615978/T

615979

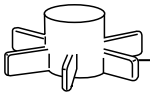

617903/G

530143

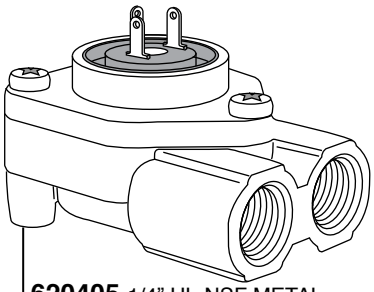

620405 1/4" UL-NSF METAL
620404 1/8" UL-NSF METAL

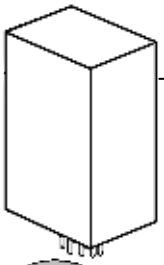

401871 F8 220V

607267 = F8

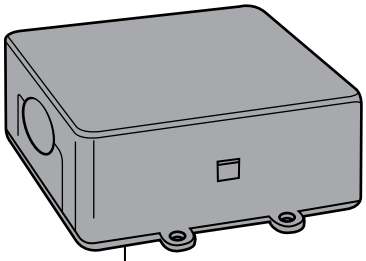

425003
GICAR CODE 9.5.32.37 G00
425004
GICAR CODE 9.5.33.13 E

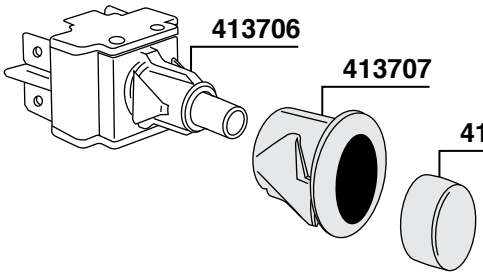

413706
413707
413708

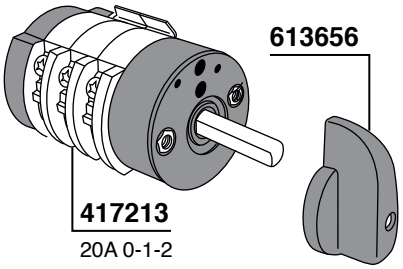

613656
417213
20A 0-1-2

404992=20A

ARANCIO
ORANGE

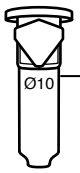

402627
COVER

VERDE
GREEN

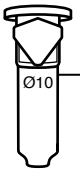

402628
COVER

VERDE
GREEN

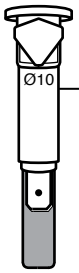

617732 220V

ROSSO
RED

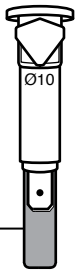

617730 220V

FIAMMA RST

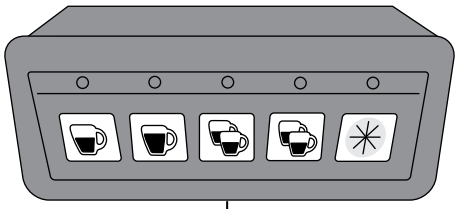

301000

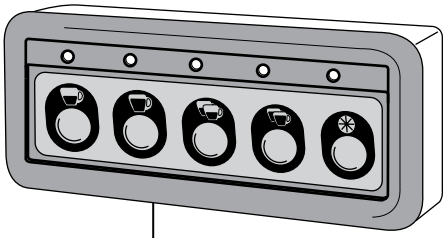

620736 16 PIN

GICAR CODE 9.9.08.83G

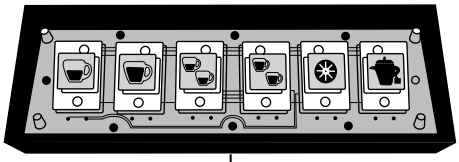

425007

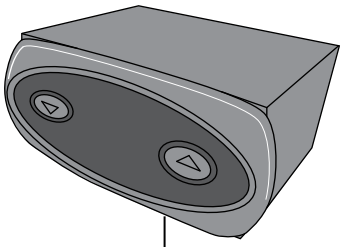

425006

9.3.00.50.G11

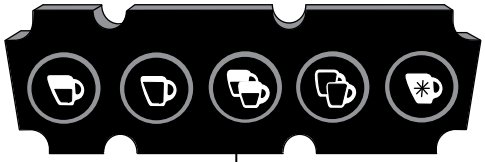

425005

GICAR CODE 9.9.14.95.G

425008

9.9.14.04.G

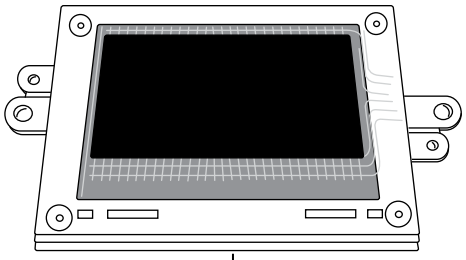

425009

8.8.74.04.G

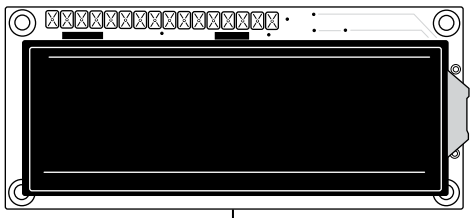

425010

9.5.13.70.G

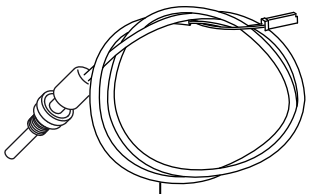

425011

NUOVA RICAMBI FUTURMAT ARIETE Tav. 01

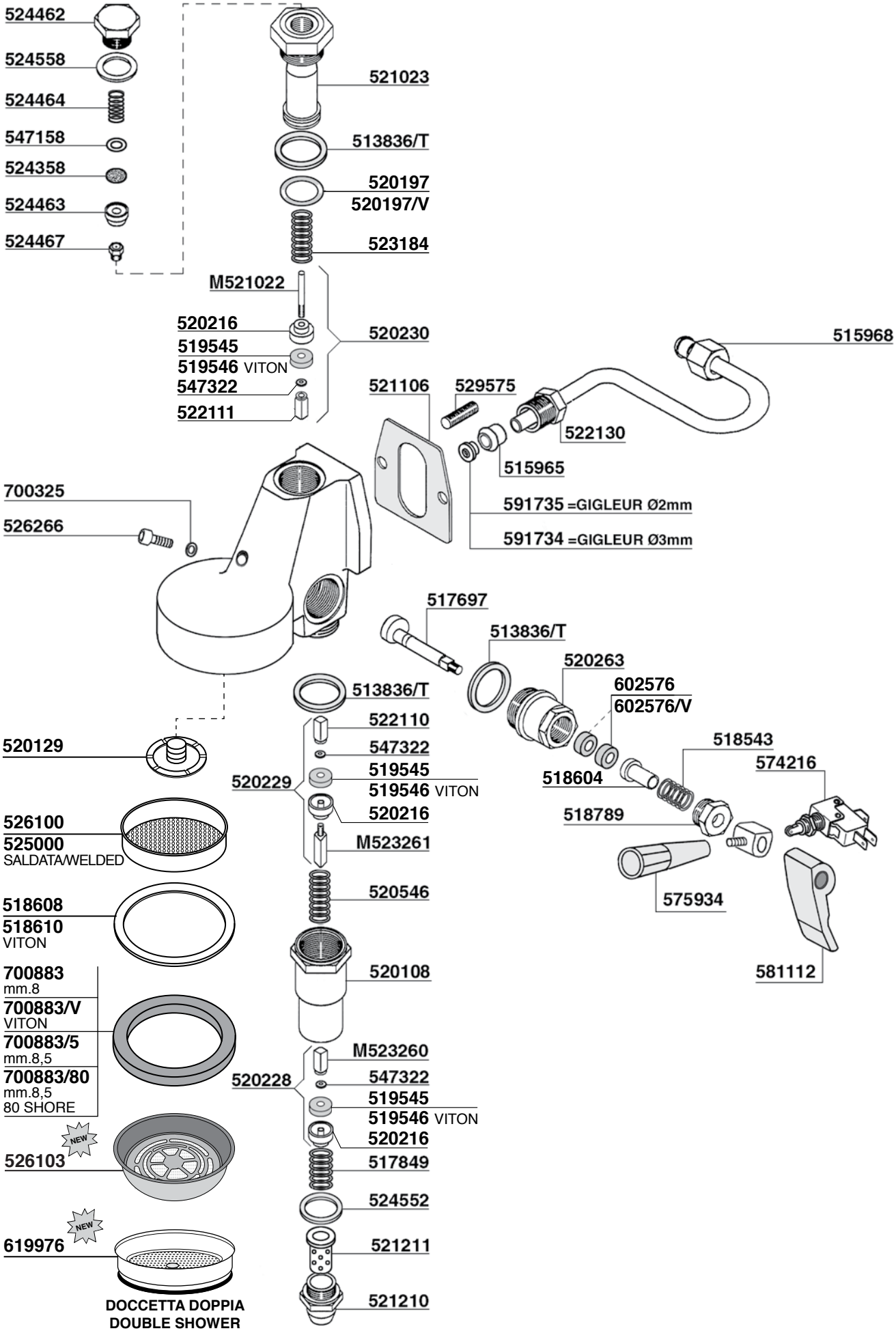

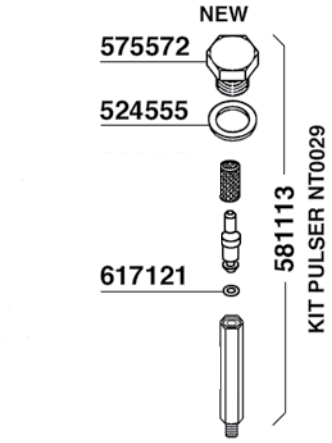

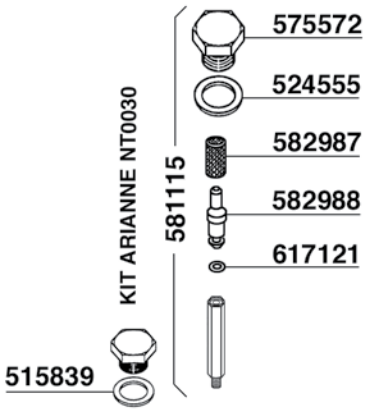

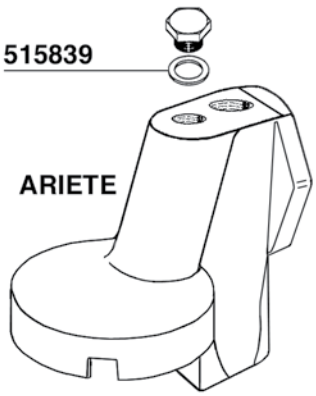

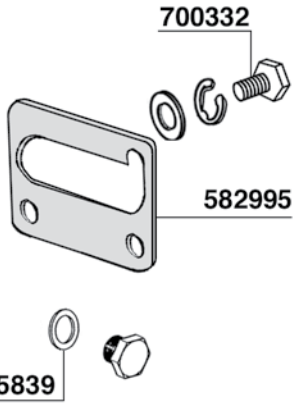

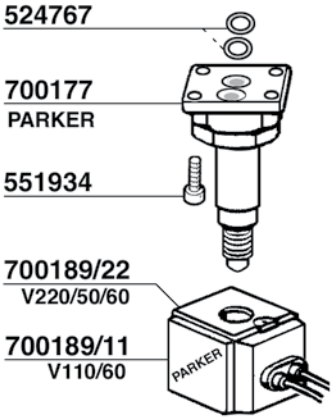

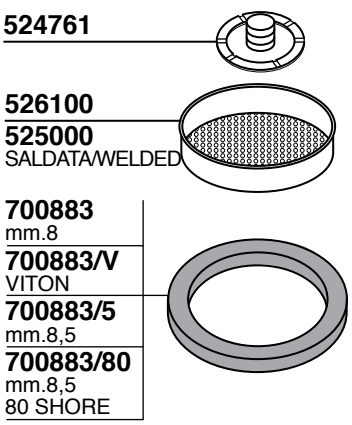

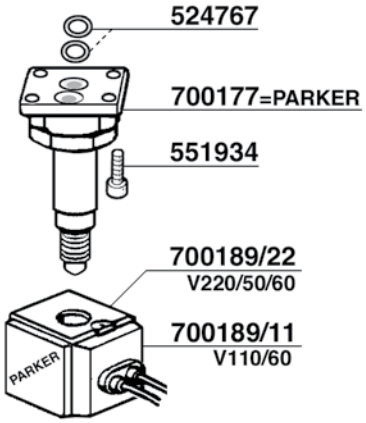

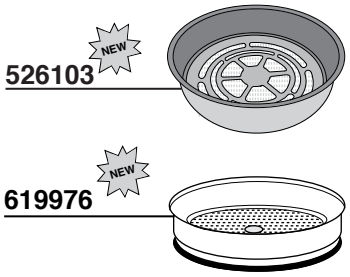

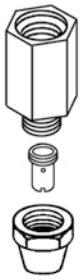

CENTRALINA AUTOLIVELLO
AUTOFIL ELECTRONIC BOX

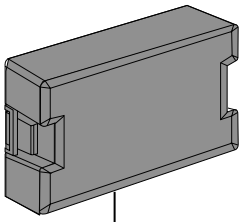

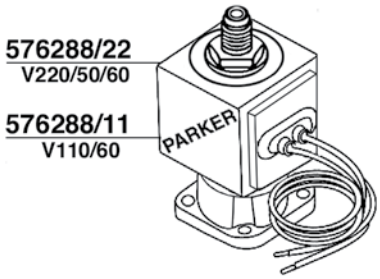

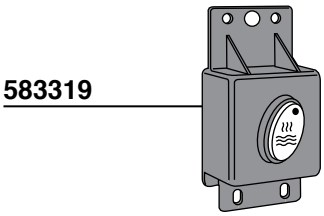

CENTRALINA AUTOLIVELLO
AUTOFIL ELECTRONIC BOX

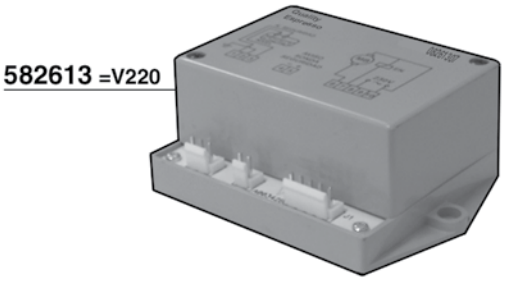

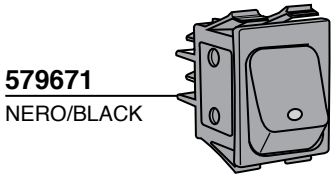

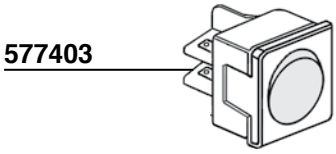

NUOVA RICAMBI FUTURMAT ARIETE Tav. 03

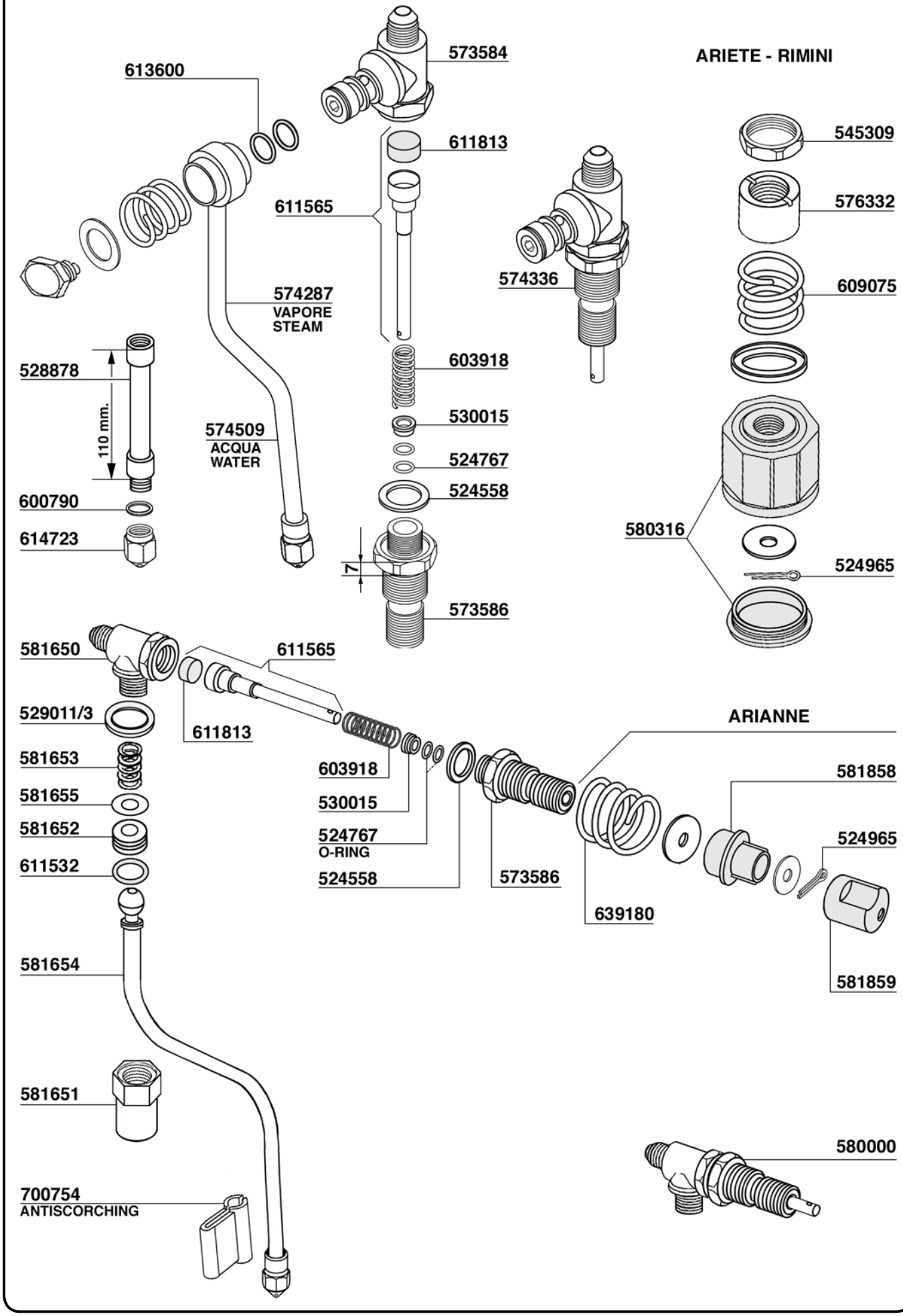

FUTURMAT ARIETE

Tav. 04

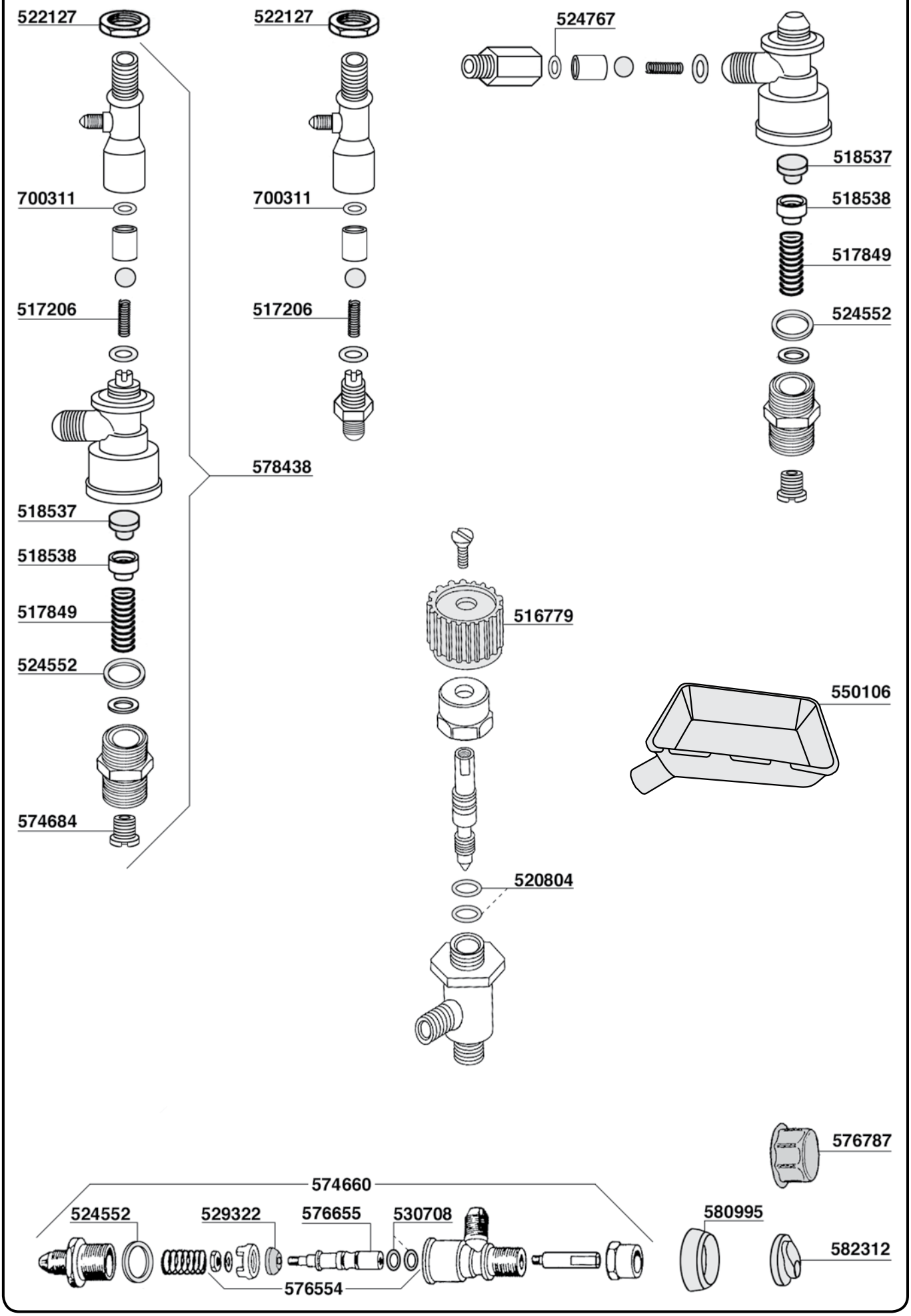

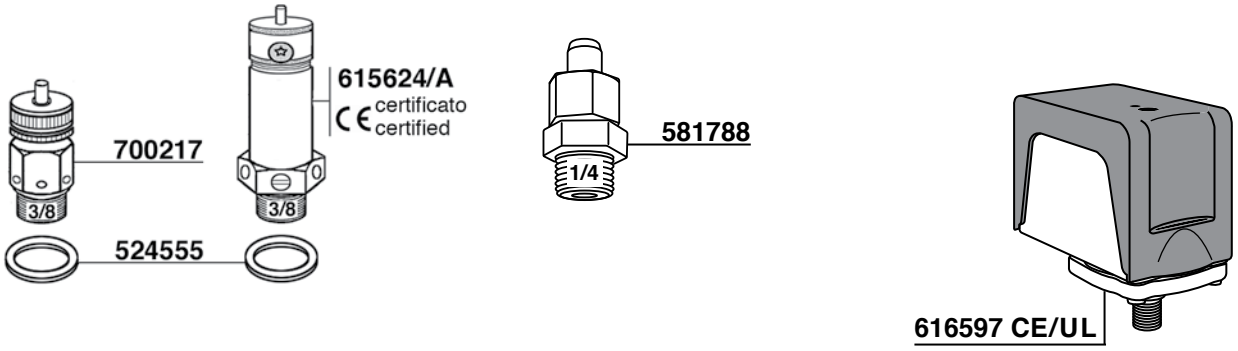
700217
3/8
524555
615624/A
CE certificato certified
3/8
581788
1/4
616597 CE/UL

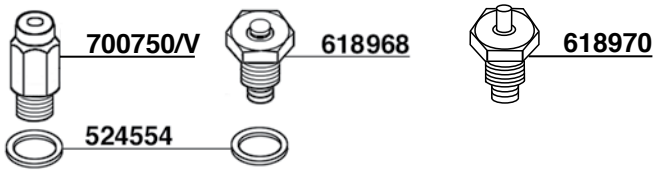
700750/V
524554
618968
618970

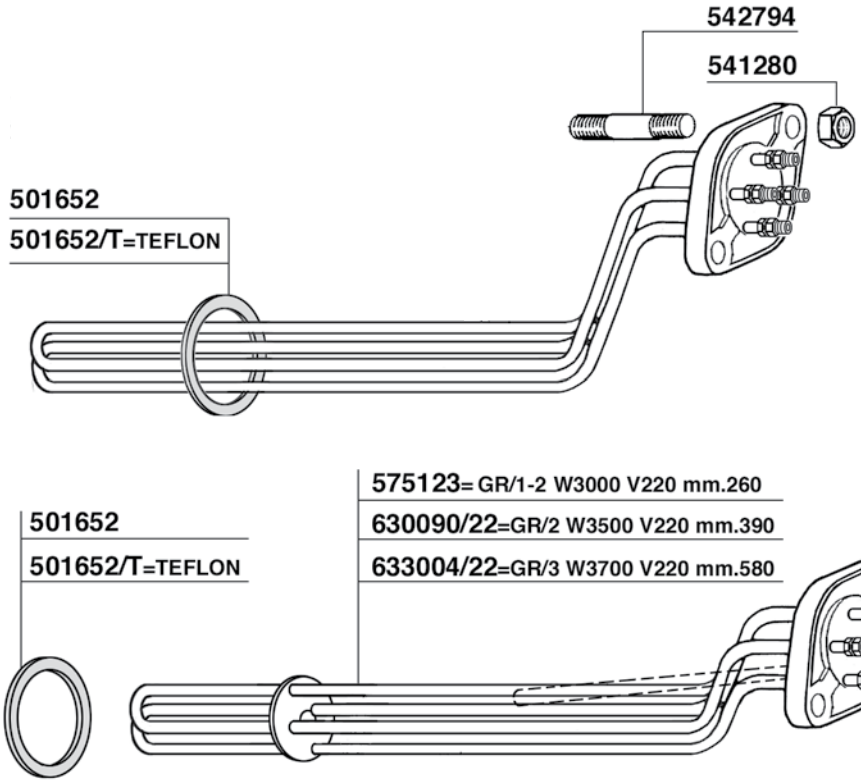
542794
541280
501652
501652/T=TEFLON
501652
501652/T=TEFLON
575123= GR/1-2 W3000 V220 mm.260
630090/22=GR/2 W3500 V220 mm.390
633004/22=GR/3 W3700 V220 mm.580

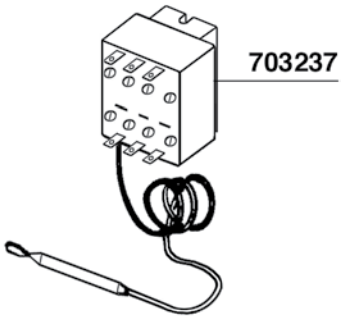
703237

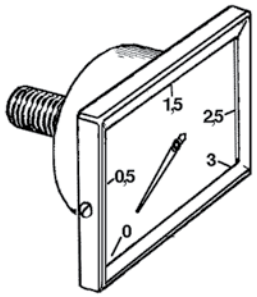
0
0,5
1,5
2,5
3

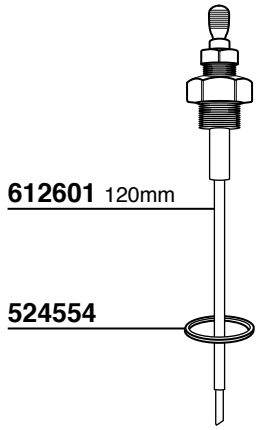
612601 120mm
524554

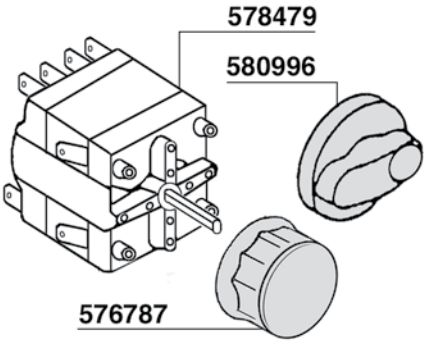
578479
580996
576787

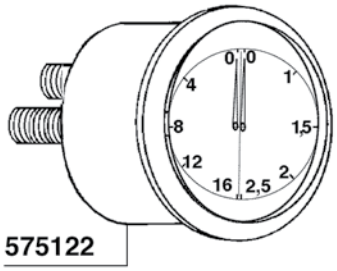
0
0
1
1,5
2
2,5
16
12
8
4
575122

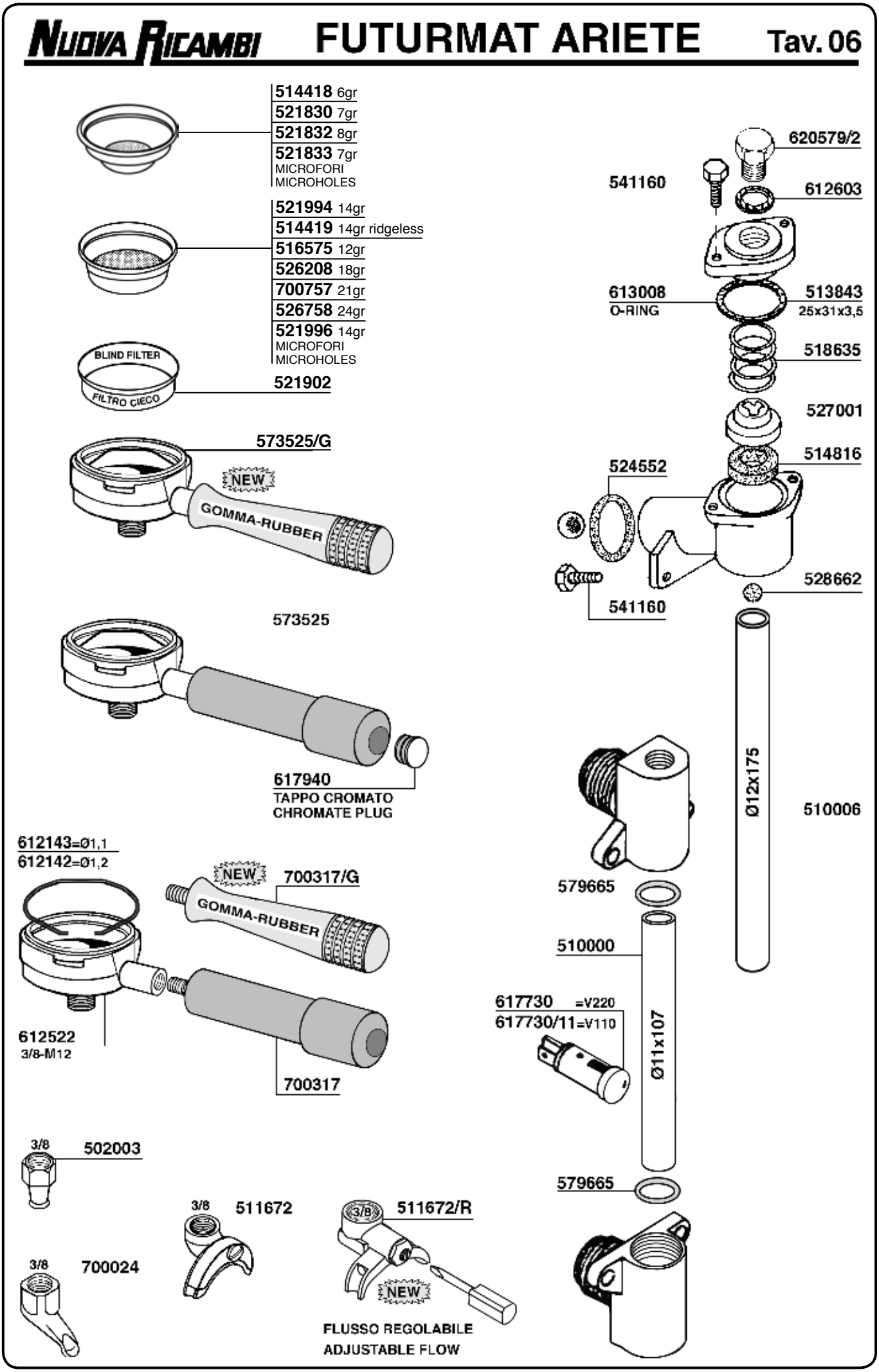
514418 6gr
521830 7gr
521832 8gr
521833 7gr
MICROFORI
MICROHOLES
521994 14gr
514419 14gr ridgeless
516575 12gr
526208 18gr
700757 21gr
526758 24gr
521996 14gr
MICROFORI
MICROHOLES
BLIND FILTER
FILTRO CIECO
521902
573525/G
NEW
GOMMA-RUBBER
573525
617940
TAPPO CROMATO
CHROMATE PLUG
612143=Ø1,1
612142=Ø1,2
NEW
700317/G
GOMMA-RUBBER
612522
3/8-M12
700317
3/8
502003
3/8
511672
3/8
700024
3/8
511672/R
NEW
FLUSSO REGOLABILE
ADJUSTABLE FLOW
620579/2
541160
612603
613008
O-RING
513843
25x31x3,5
518635
527001
514816
524552
528662
541160
Ø12x175
510006
579665
510000
617730 =V220
617730/11=V110
Ø11x107
579665

GAGGIA

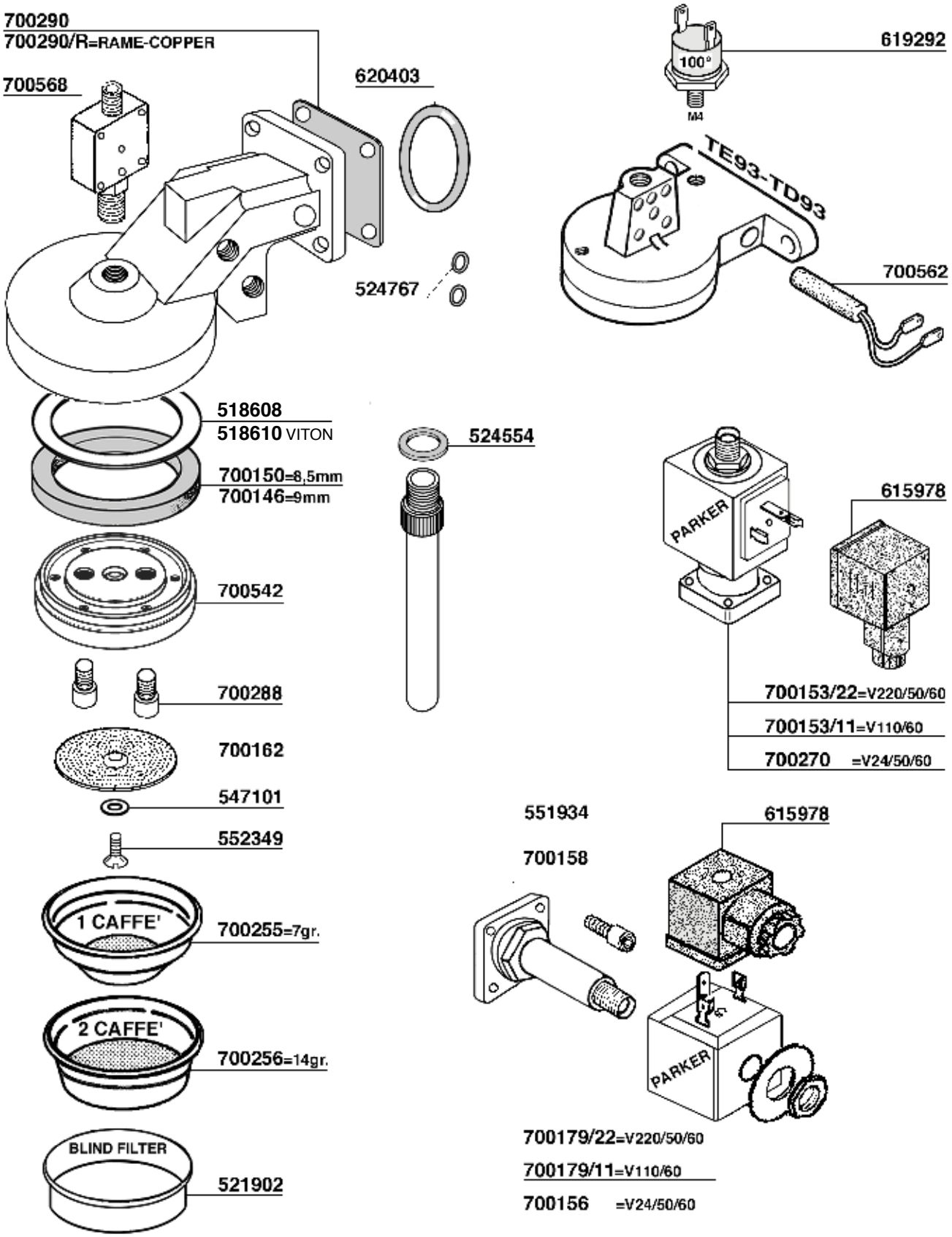
700290
700290/R=RAME-COPPER
700568
620403
524767
619292
100°
M4
TE93-TD93
700562
518608
518610 VITON
700150=8,5mm
700146=9mm
524554
PARKER
615978
700542
700288
700153/22=V220/50/60
700153/11=V110/60
700270 =V24/50/60
700162
547101
552349
551934
615978
700158
1 CAFFE'
700255=7gr.
2 CAFFE'
700256=14gr.
PARKER
700179/22=V220/50/60
700179/11=V110/60
700156 =V24/50/60
BLIND FILTER
521902
620664
FILTER
400831
O-RING
620665=GIGLEUR Ø 0,6
620666=GIGLEUR Ø 0,8
579671
NERO/ BLACK
618010
700247
SPIA ROSSA
RED PILOT LIGHT

GAGGIA

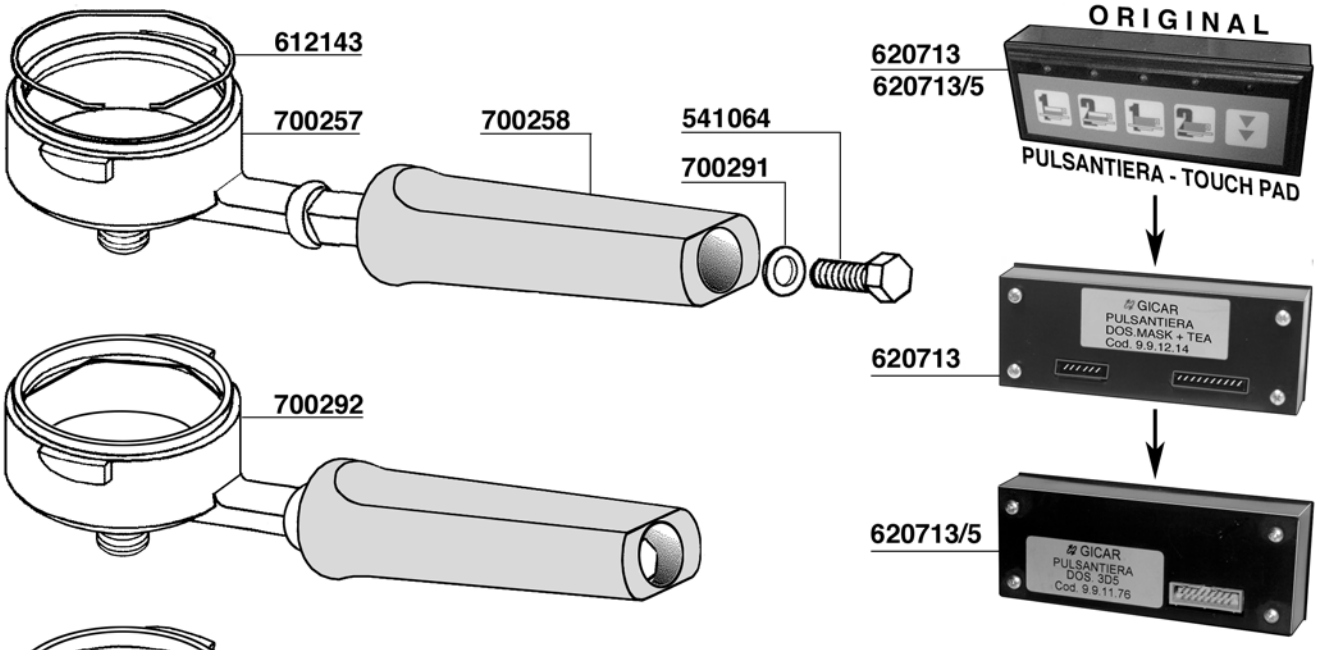

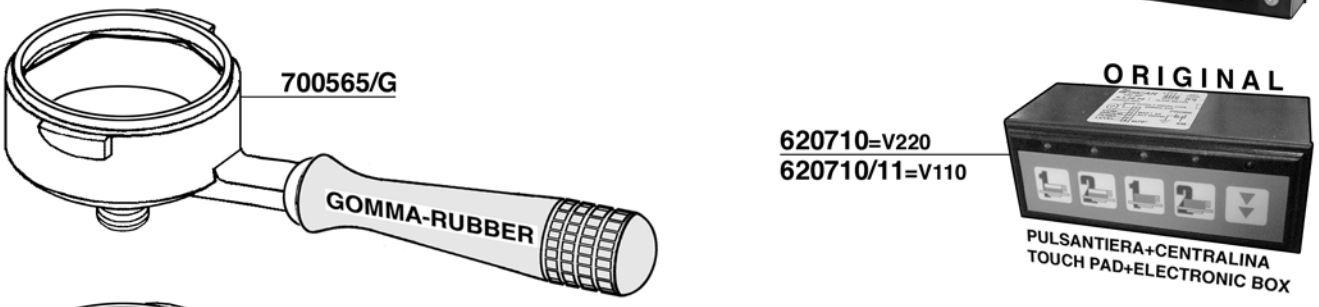

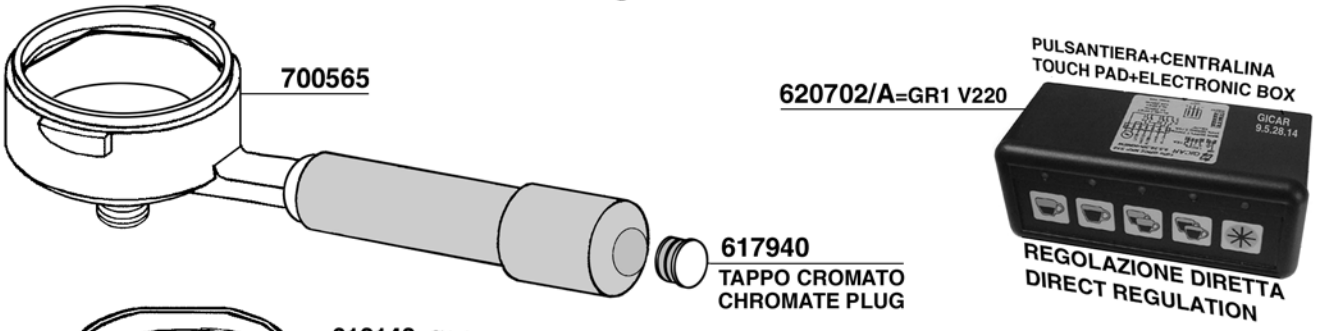

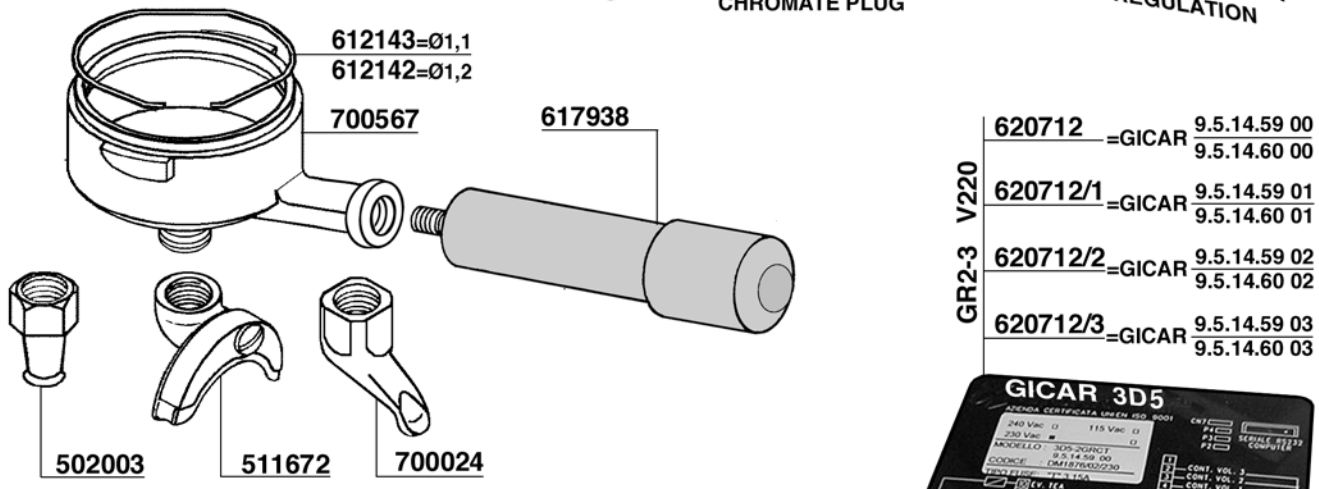

GR2-3 V220	620712	=GICAR	9.5.14.59 00 / 9.5.14.60 00
	620712/1	=GICAR	9.5.14.59 01 / 9.5.14.60 01
	620712/2	=GICAR	9.5.14.59 02 / 9.5.14.60 02
	620712/3	=GICAR	9.5.14.59 03 / 9.5.14.60 03

FLUSSO REGOLABILE
ADJUSTABLE FLOW

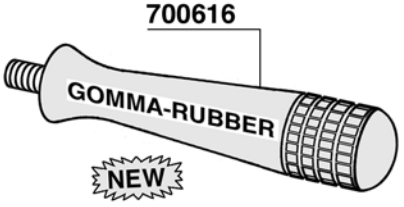

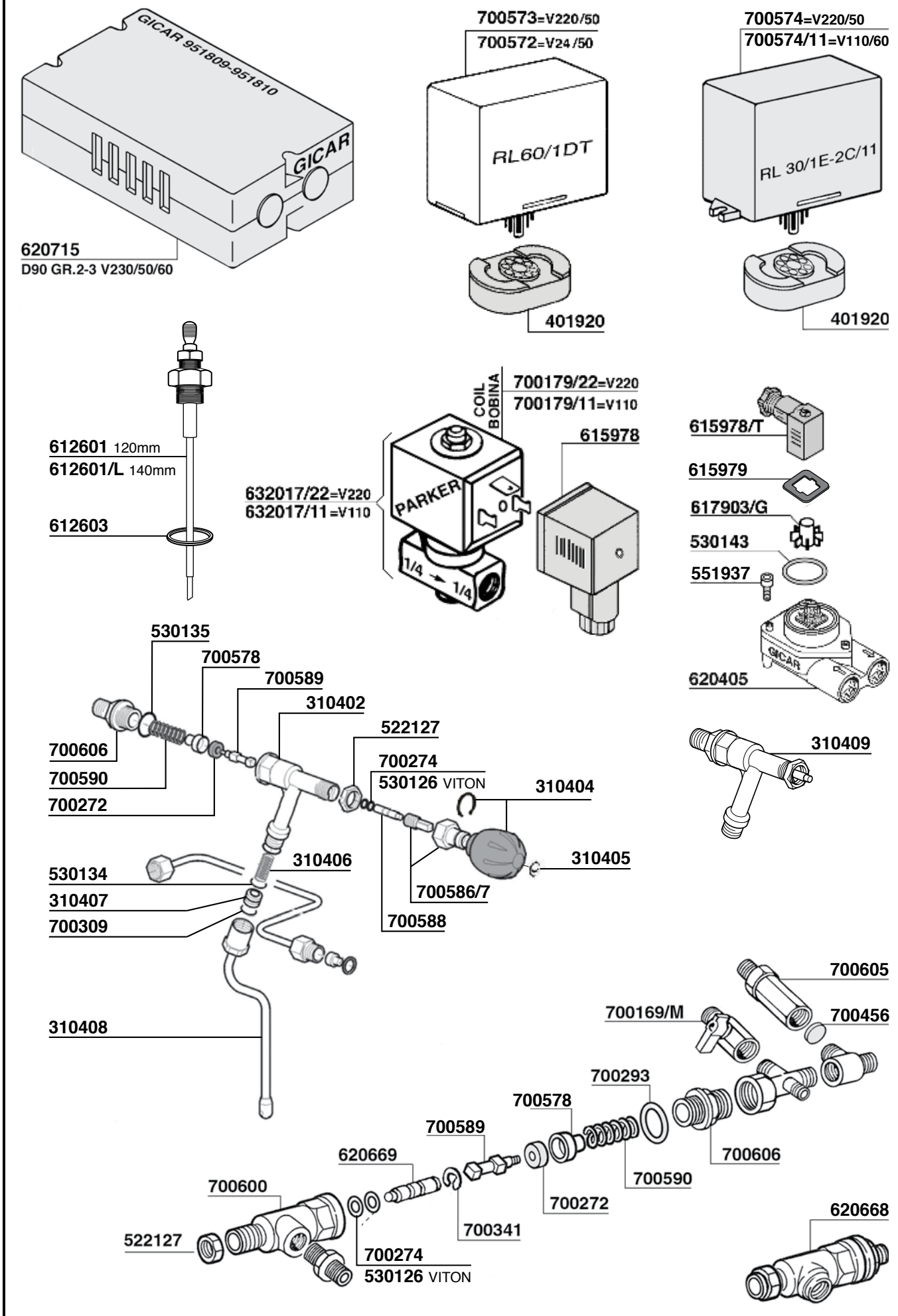
GICAR 951809-951810
GICAR
620715
D90 GR.2-3 V230/50/60
700573=V220/50
700572=V24/50
RL60/1DT
401920
700574=V220/50
700574/11=V110/60
RL 30/1E-2C/11
401920
612601 120mm
612601/L 140mm
612603
COIL
BOBINA
700179/22=V220
700179/11=V110
632017/22=V220
632017/11=V110
PARKER
1/4 → 1/4
615978
615978/T
615979
617903/G
530143
551937
620405
GICAR
530135
700578
700589
310402
522127
700606
700590
700272
700274
530126 VITON
310404
310405
310409
530134
310406
310407
700309
700586/7
700588
310408
700605
700169/M
700456
700293
700578
700589
620669
700606
700590
700600
700272
700341
522127
700274
530126 VITON
620668

GAGGIA

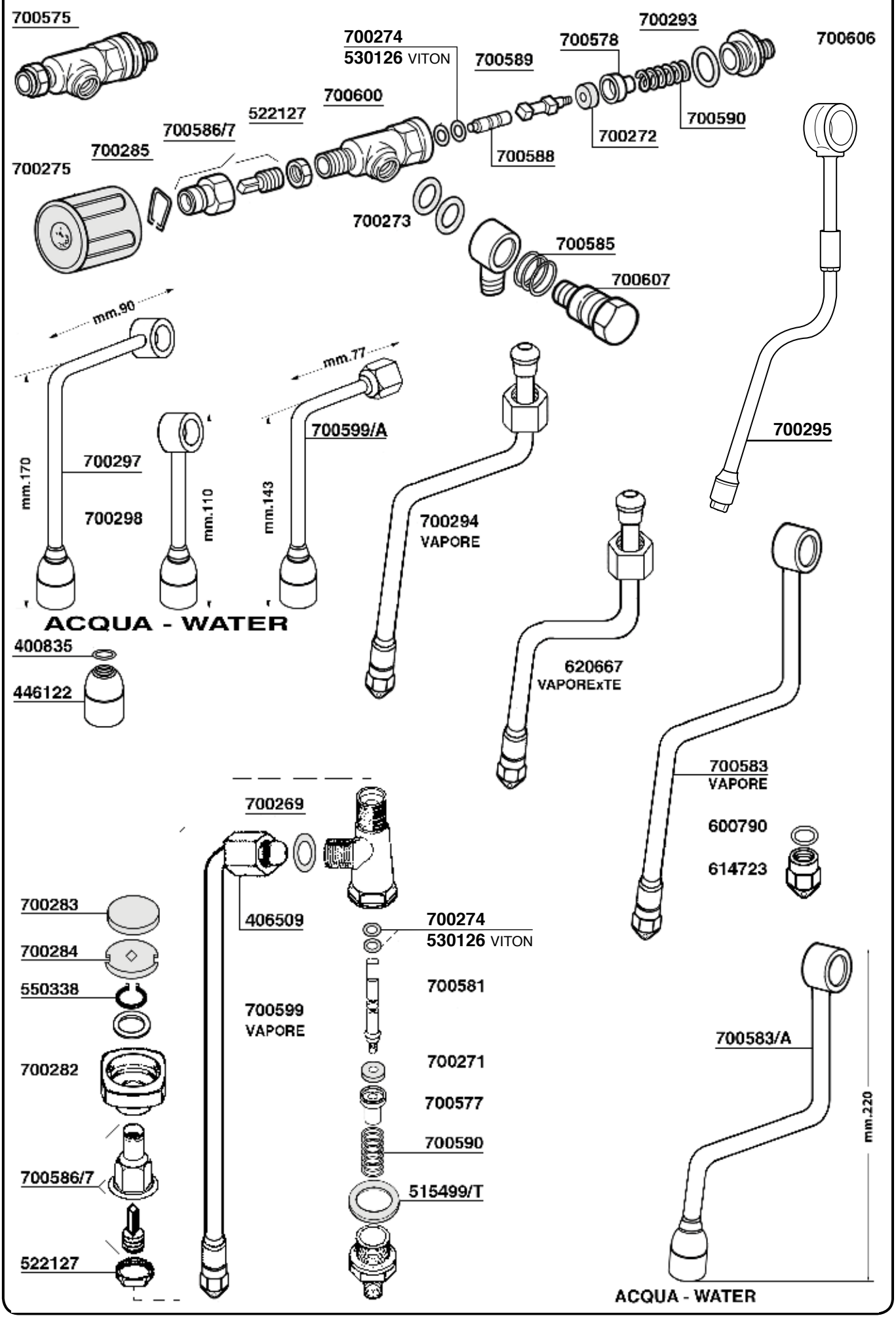
700575
700274
530126 VITON
700589
700578
700293
700606
700600
522127
700586/7
700285
700275
700588
700272
700590
700273
700585
700607
mm.90
mm.77
700599/A
700295
mm.170
700297
700298
mm.110
mm.143
700294
VAPORE
ACQUA - WATER
400835
446122
620667
VAPOREXTE
700583
VAPORE
600790
614723
700269
406509
700274
530126 VITON
700581
700599
VAPORE
700283
700284
550338
700282
700271
700577
700590
700586/7
515499/T
522127
700583/A
mm.220
ACQUA - WATER

GAGGIA

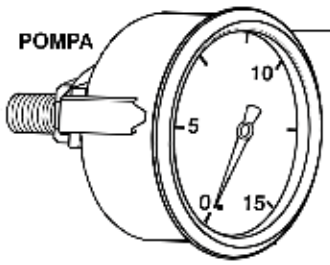
POMPA
700595
Ø52mm.

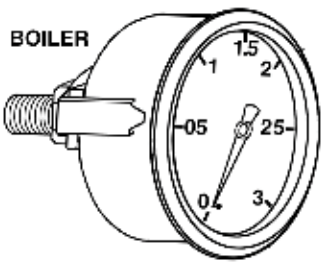
BOILER
700594
Ø52mm.

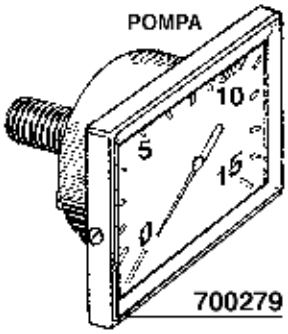
POMPA
700279

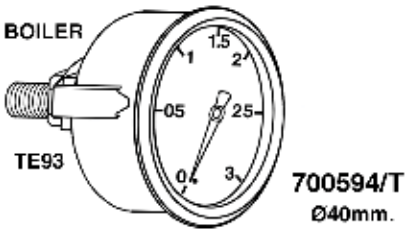
BOILER
TE93
700594/T
Ø40mm.

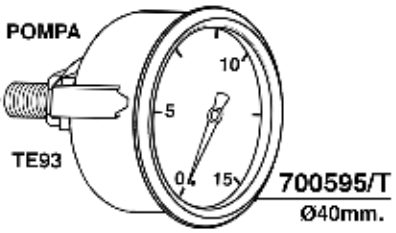
POMPA
TE93
700595/T
Ø40mm.

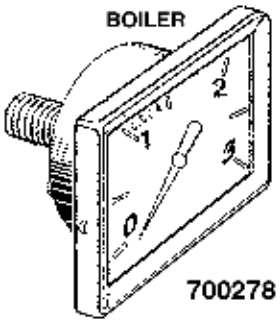
BOILER
700278

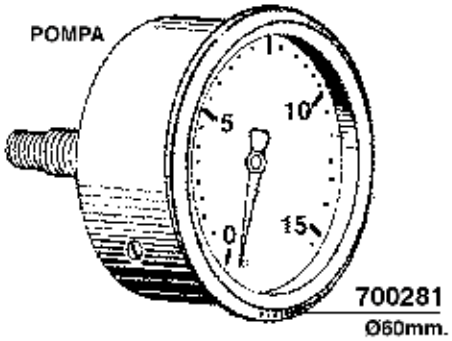
POMPA
700281
Ø60mm.

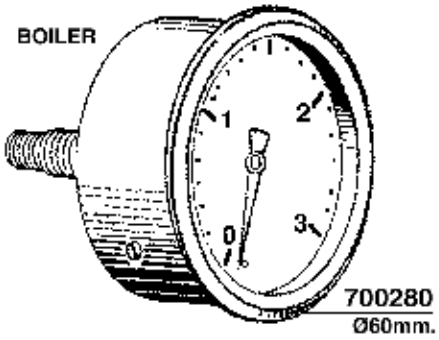
BOILER
700280
Ø60mm.

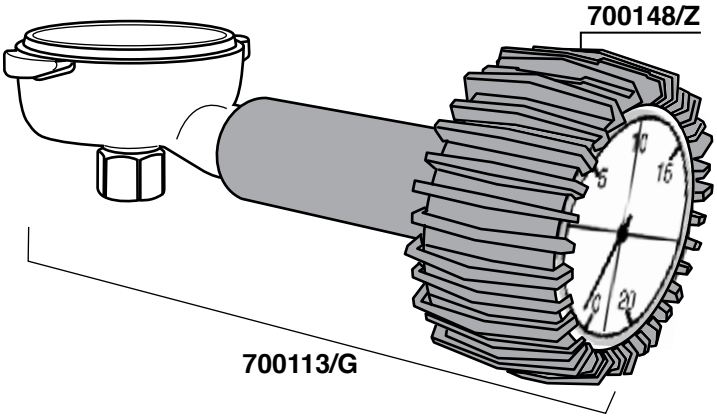
700148/Z
700113/G

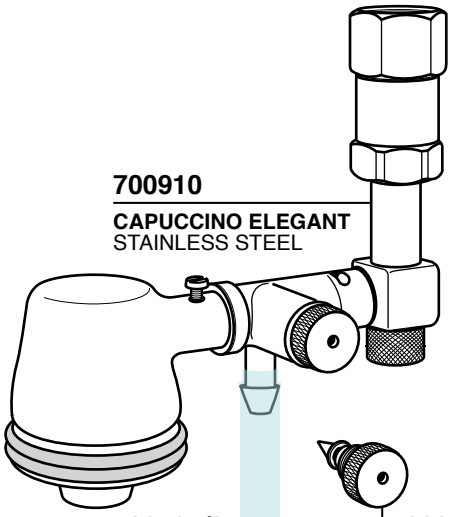
700910
CAPUCCINO ELEGANT
STAINLESS STEEL
700197/8
SILICON Ø 5x8
700914
PERNO
REGOLAZIONE

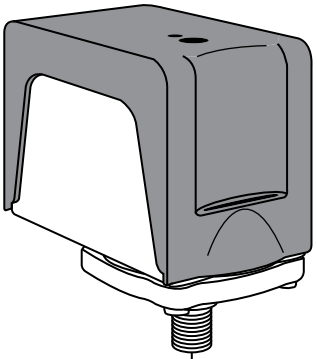
616597 CE/UL

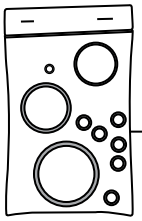
700913
KIT O-RING

GAGGIA

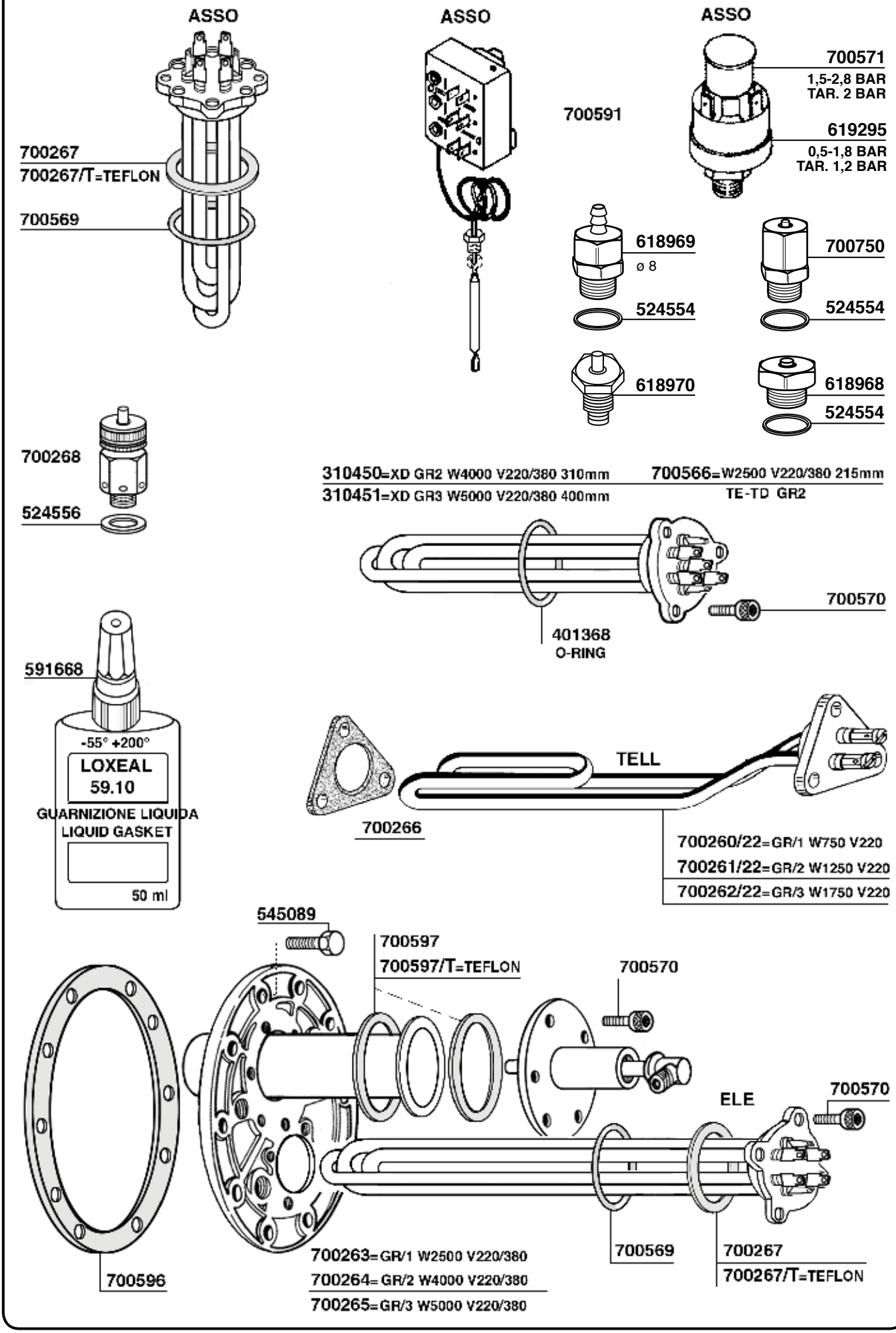
ASSO
700267
700267/T=TEFLON
700569
ASSO
700591
ASSO
700571
1,5-2,8 BAR
TAR. 2 BAR
619295
0,5-1,8 BAR
TAR. 1,2 BAR
618969
ø 8
524554
700750
524554
618970
618968
524554
700268
524556
310450=XD GR2 W4000 V220/380 310mm
310451=XD GR3 W5000 V220/380 400mm
700566=W2500 V220/380 215mm
TE-TD GR2
700570
401368
O-RING
591668
-55° +200°
LOXEAL
59.10
GUARNIZIONE LIQUIDA
LIQUID GASKET
50 ml
TELL
700266
700260/22=GR/1 W750 V220
700261/22=GR/2 W1250 V220
700262/22=GR/3 W1750 V220
545089
700597
700597/T=TEFLON
700570
ELE
700570
700596
700263=GR/1 W2500 V220/380
700264=GR/2 W4000 V220/380
700265=GR/3 W5000 V220/380
700569
700267
700267/T=TEFLON

GAGGIA

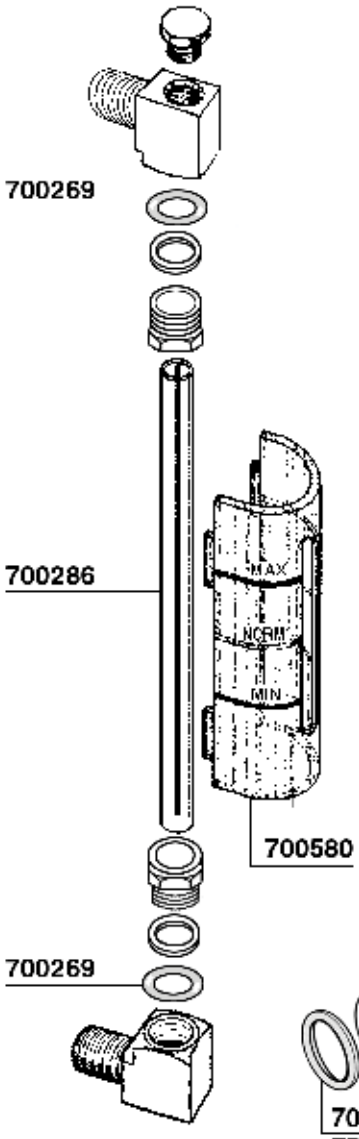

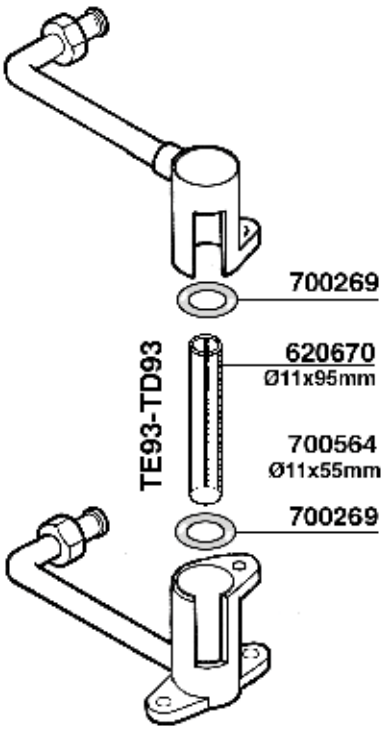

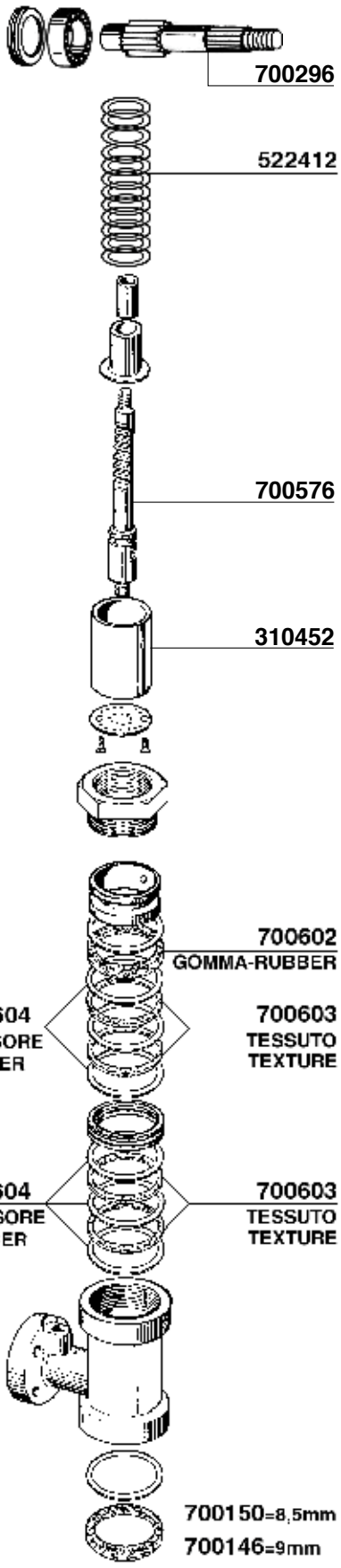

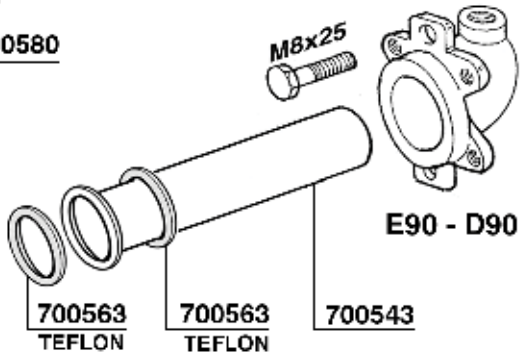

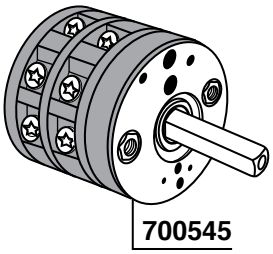

700545
25A

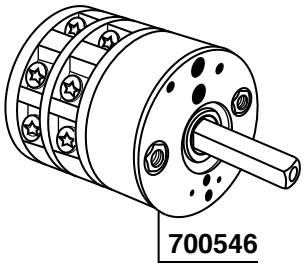

700546
16A

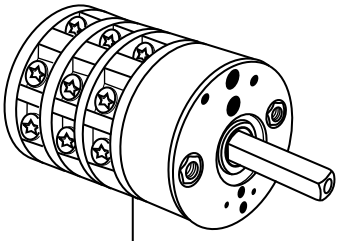

700544
25A - 4 POS.

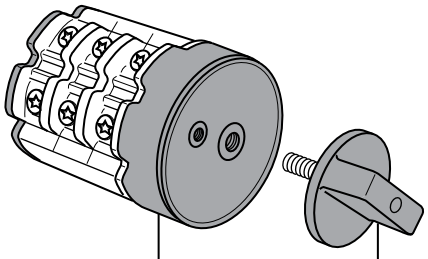

700520
32A - 4 POS.

700549

GAGGIA

BABY

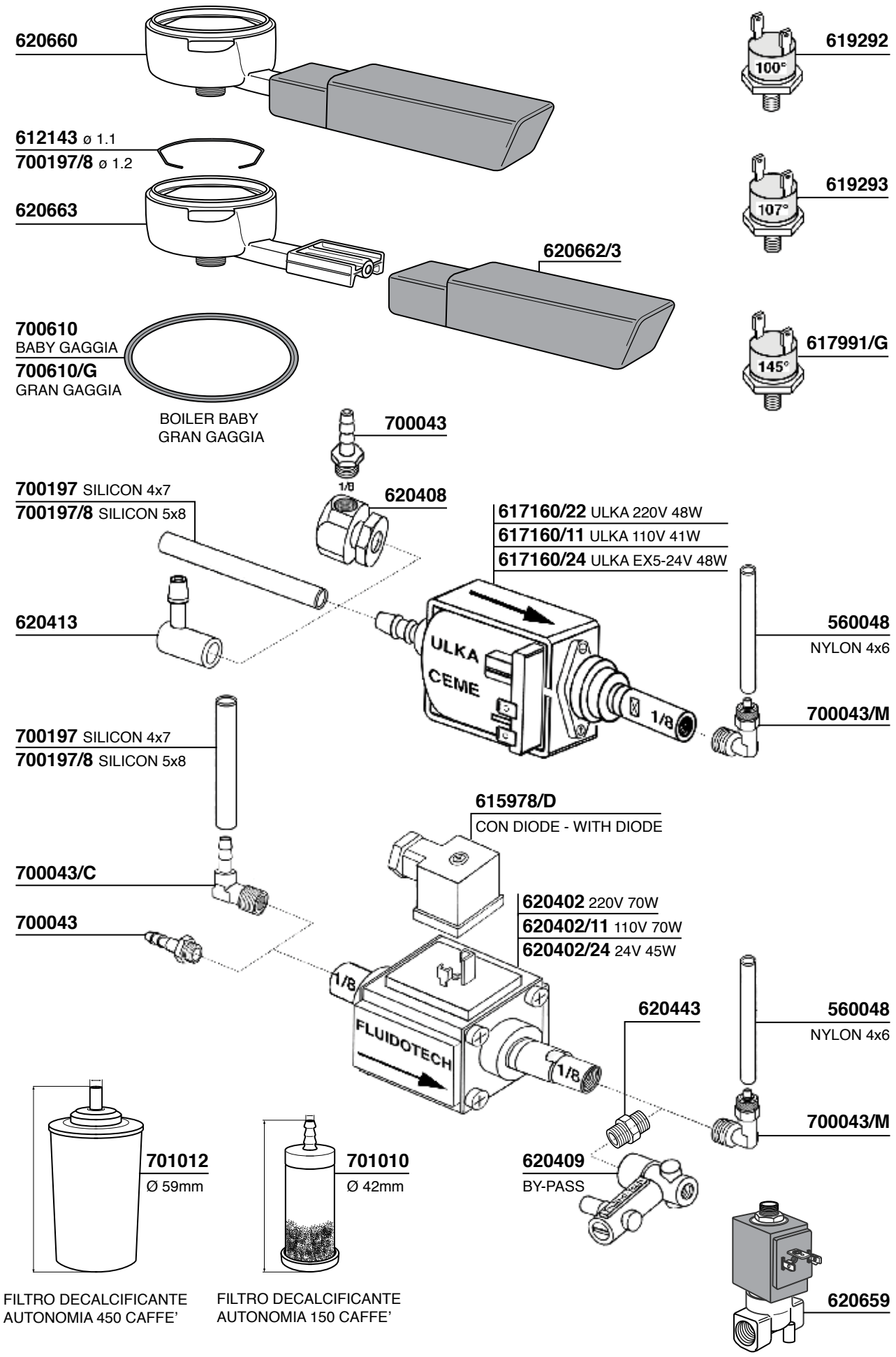
620660
619292
100°
612143 ø 1.1
700197/8 ø 1.2
620663
619293
107°
620662/3
700610
BABY GAGGIA
700610/G
GRAN GAGGIA
617991/G
145°
BOILER BABY
GRAN GAGGIA
700043
1/8
620408
700197 SILICON 4x7
700197/8 SILICON 5x8
617160/22 ULKA 220V 48W
617160/11 ULKA 110V 41W
617160/24 ULKA EX5-24V 48W
620413
560048
NYLON 4x6
ULKA
CEME
1/8
700043/M
700197 SILICON 4x7
700197/8 SILICON 5x8
615978/D
CON DIODE - WITH DIODE
700043/C
620402 220V 70W
620402/11 110V 70W
620402/24 24V 45W
700043
1/8
620443
560048
NYLON 4x6
FLUIDOTECH
1/8
700043/M
701012
Ø 59mm
701010
Ø 42mm
620409
BY-PASS
FILTRO DECALCIFICANTE
AUTONOMIA 450 CAFFE'
FILTRO DECALCIFICANTE
AUTONOMIA 150 CAFFE'
620659

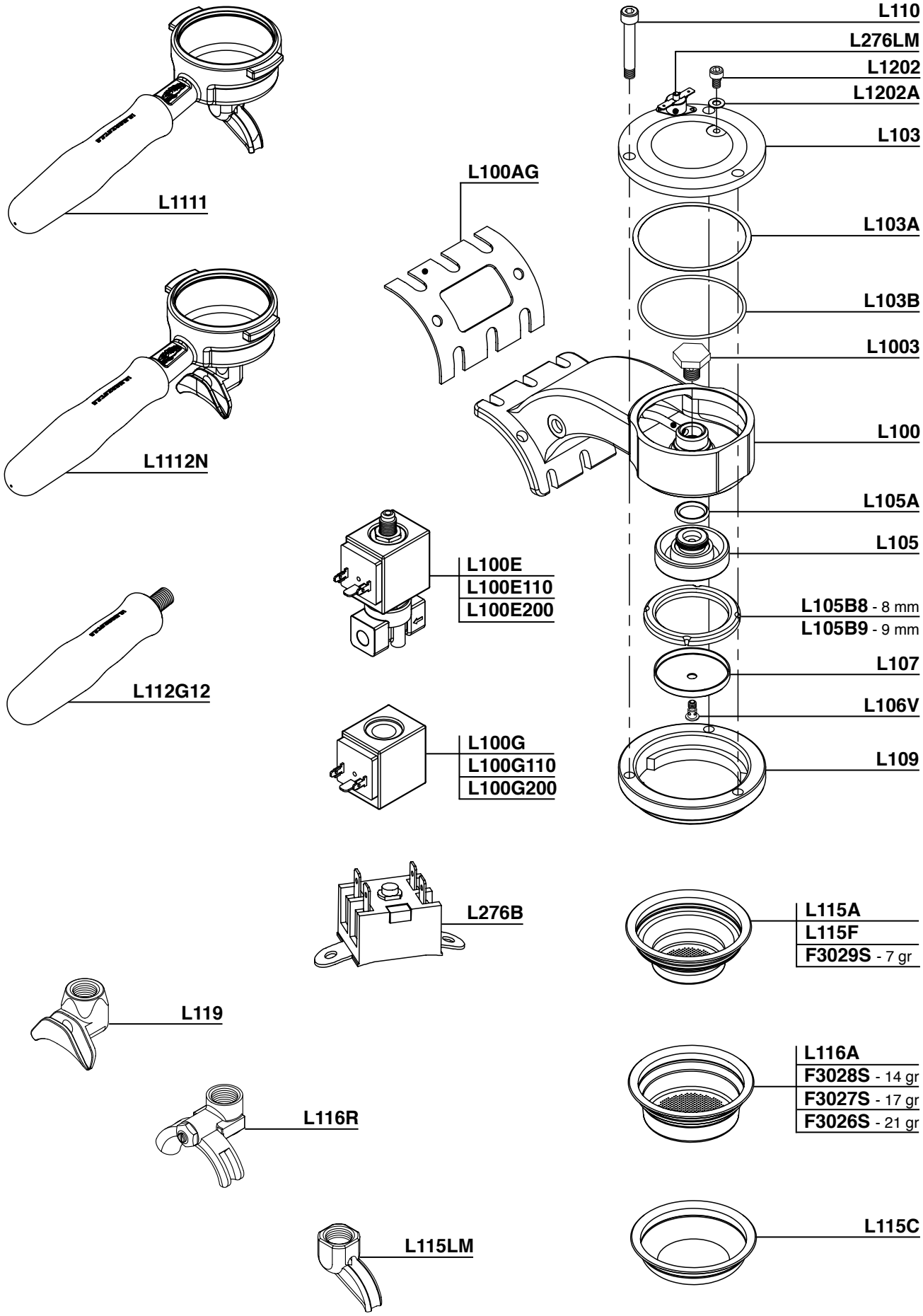
L110
L276LM
L1202
L1202A
L103
L100AG
L1111
L103A
L103B
L1003
L1112N
L100
L105A
L105
L100E
L100E110
L100E200
L105B8 - 8 mm
L105B9 - 9 mm
L107
L112G12
L106V
L100G
L100G110
L100G200
L109
L276B
L115A
L115F
F3029S - 7 gr
L119
L116A
F3028S - 14 gr
F3027S - 17 gr
F3026S - 21 gr
L116R
L115C
L115LM

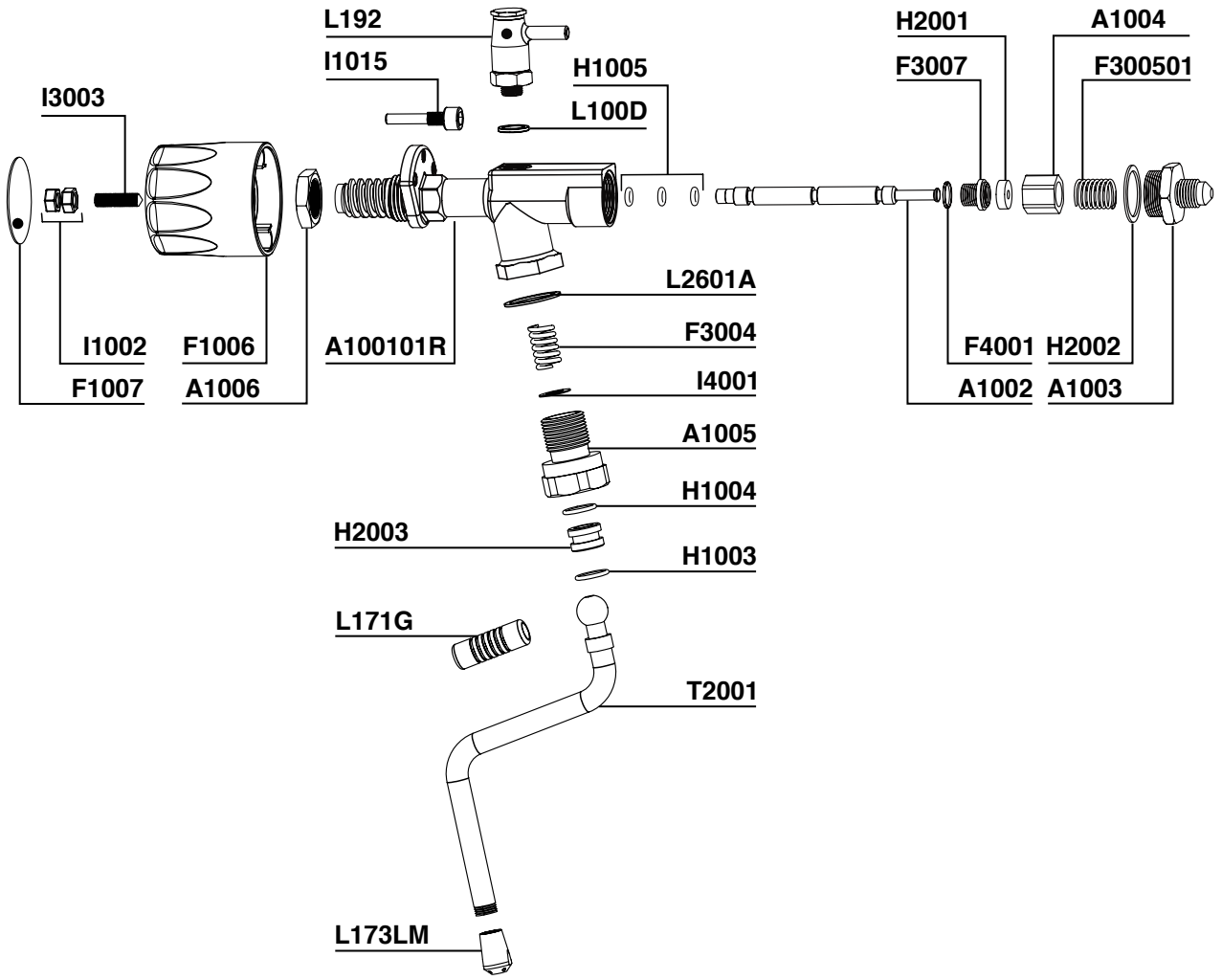
L192
I1015
H1005
L100D
H2001
F3007
A1004
F300501
I3003
L2601A
F3004
I4001
A1005
H1004
H1003
H2003
L171G
T2001
L173LM
I1002
F1006
A100101R
F1007
A1006
F4001
H2002
A1002
A1003

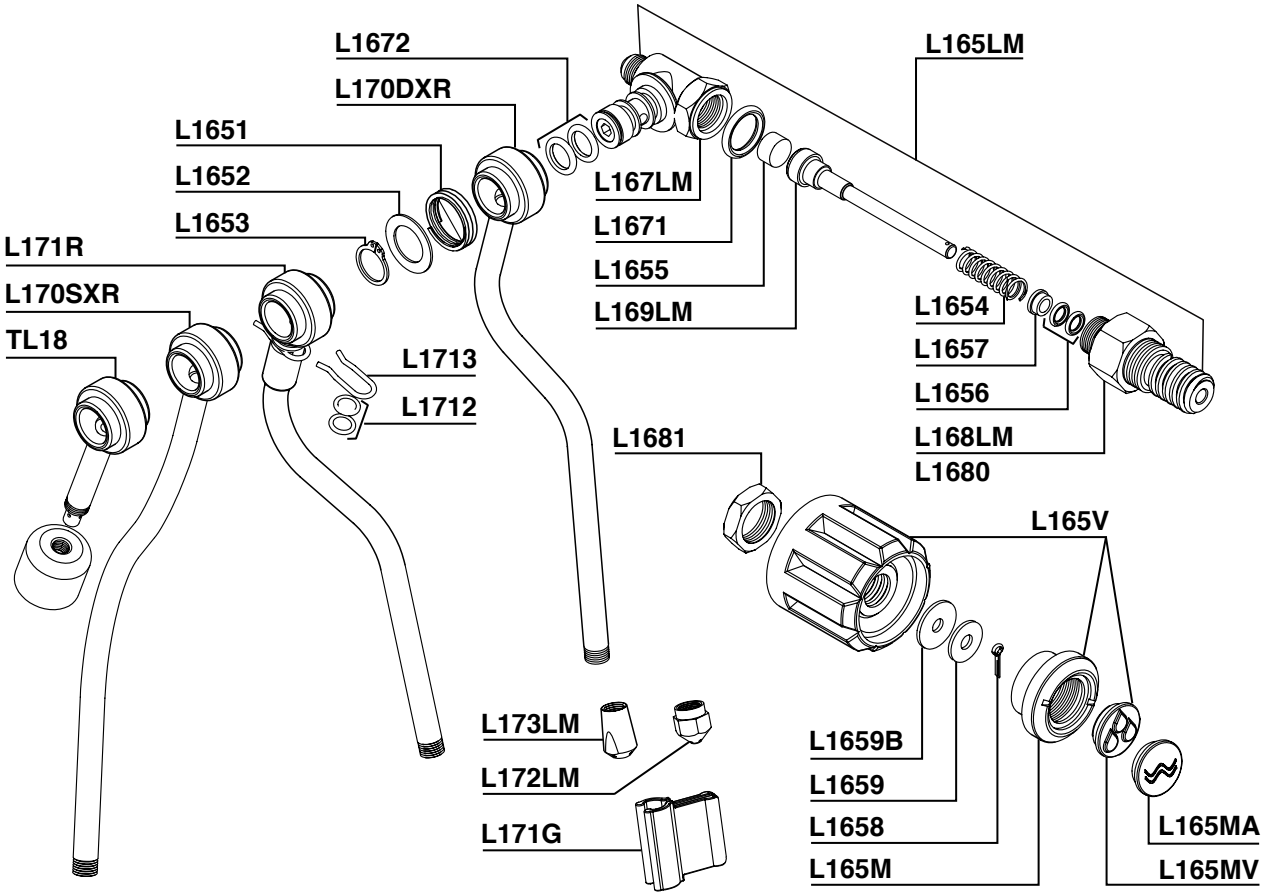
L1672
L170DXR
L165LM
L1651
L1652
L1653
L167LM
L1671
L1655
L169LM
L171R
L170SXR
TL18
L1713
L1712
L1654
L1657
L1656
L168LM
L1680
L1681
L165V
L173LM
L172LM
L171G
L1659B
L1659
L1658
L165M
L165MA
L165MV

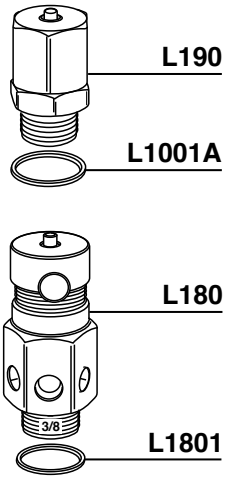
L190
L1001A
L180
3/8
L1801

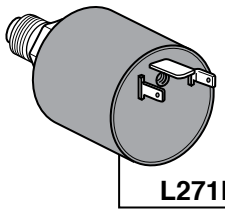
L271LM

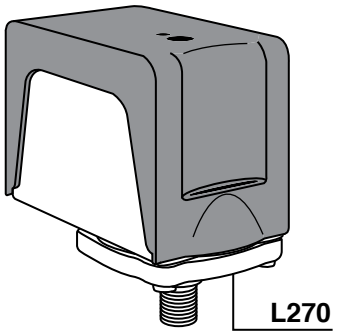
L270

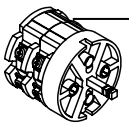
L40032

L400T1

L400K

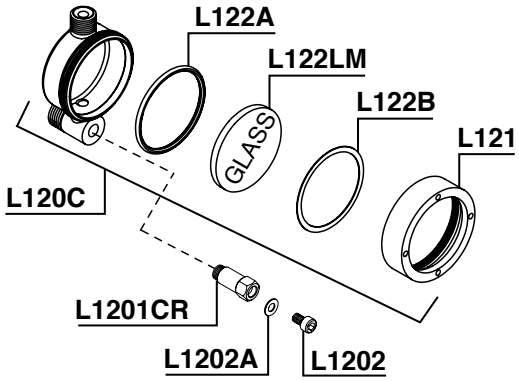
L122A
L122LM
GLASS
L122B
L121
L120C
L1201CR
L1202A
L1202

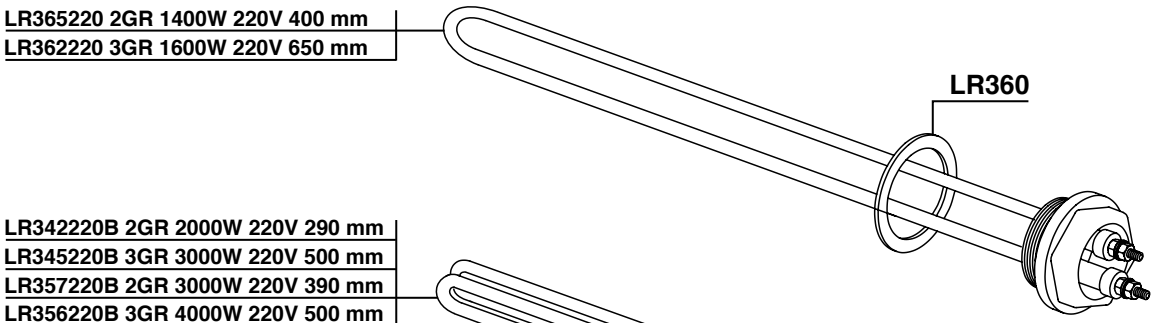
LR365220 2GR 1400W 220V 400 mm
LR362220 3GR 1600W 220V 650 mm
LR360

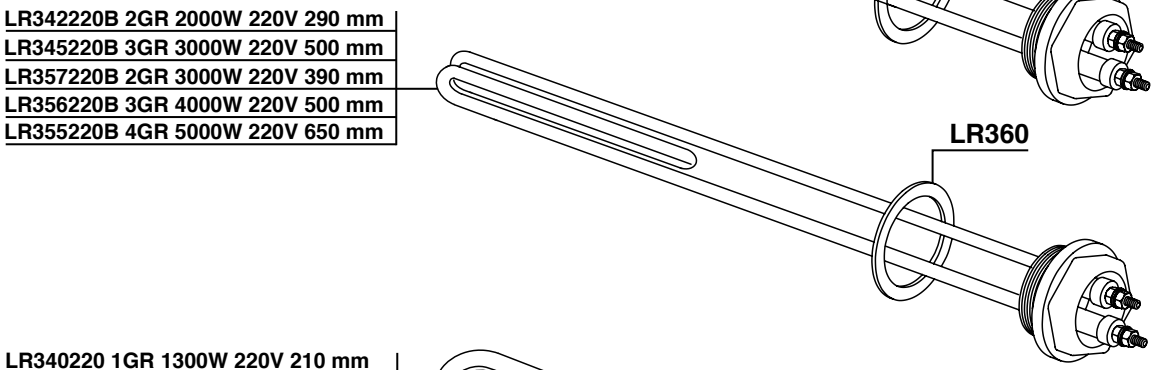
LR342220B 2GR 2000W 220V 290 mm
LR345220B 3GR 3000W 220V 500 mm
LR357220B 2GR 3000W 220V 390 mm
LR356220B 3GR 4000W 220V 500 mm
LR355220B 4GR 5000W 220V 650 mm
LR360

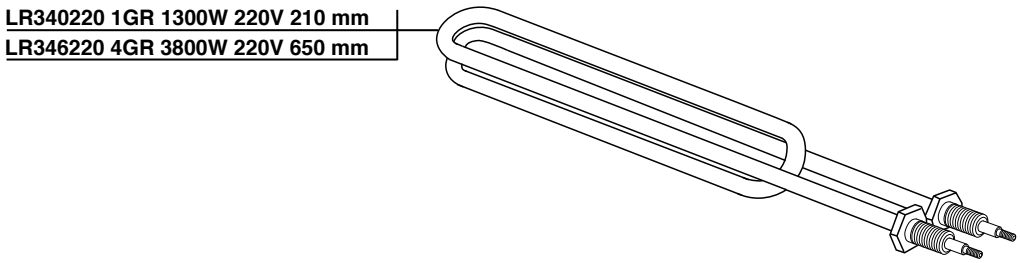
LR340220 1GR 1300W 220V 210 mm
LR346220 4GR 3800W 220V 650 mm

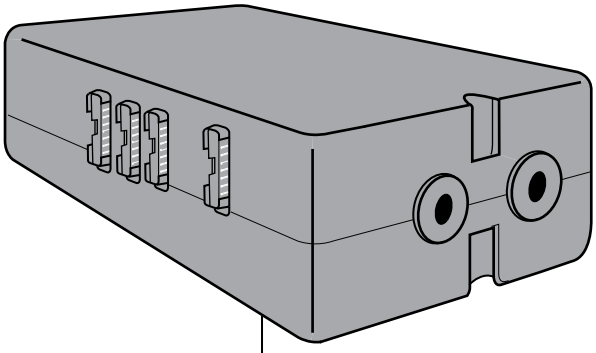

LAD0703 GR3
LAD0704 GR4

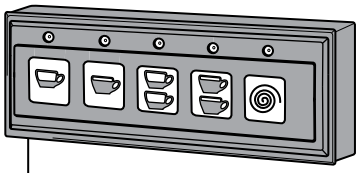

LAD071THE
LAD071VT

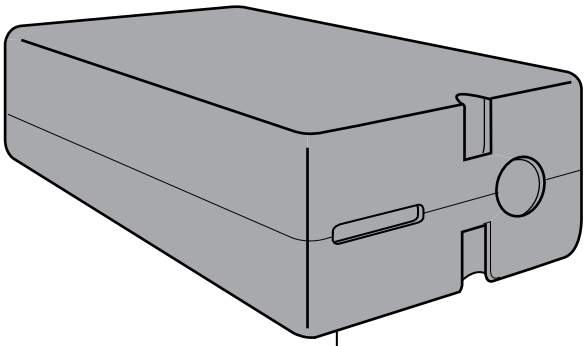

LAD3D54

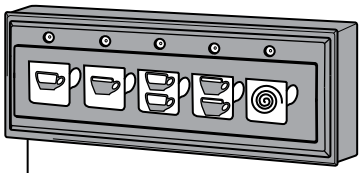

LAD3D5THE

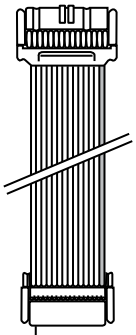

LAD3D5C01 16 PINS - 800mm
LAD3D5C02 16 PINS - 110mm
LAD3D5C03 16 PINS - 1400mm

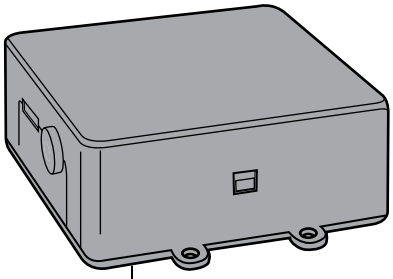

LAD3D53
LAD3D53LC

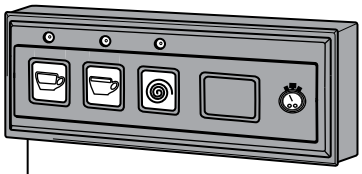

LAD3D5P3C

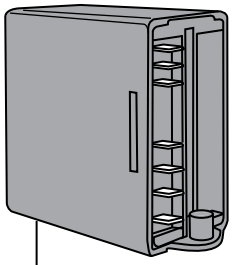

LA050

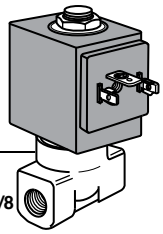

L053 220V
L053200 200V
L053240 240V

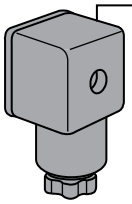

L205

L283C

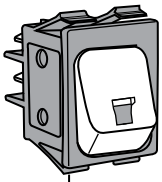

L2851

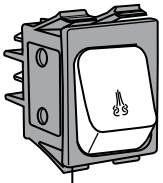

L2861

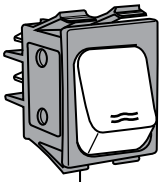

L286LM

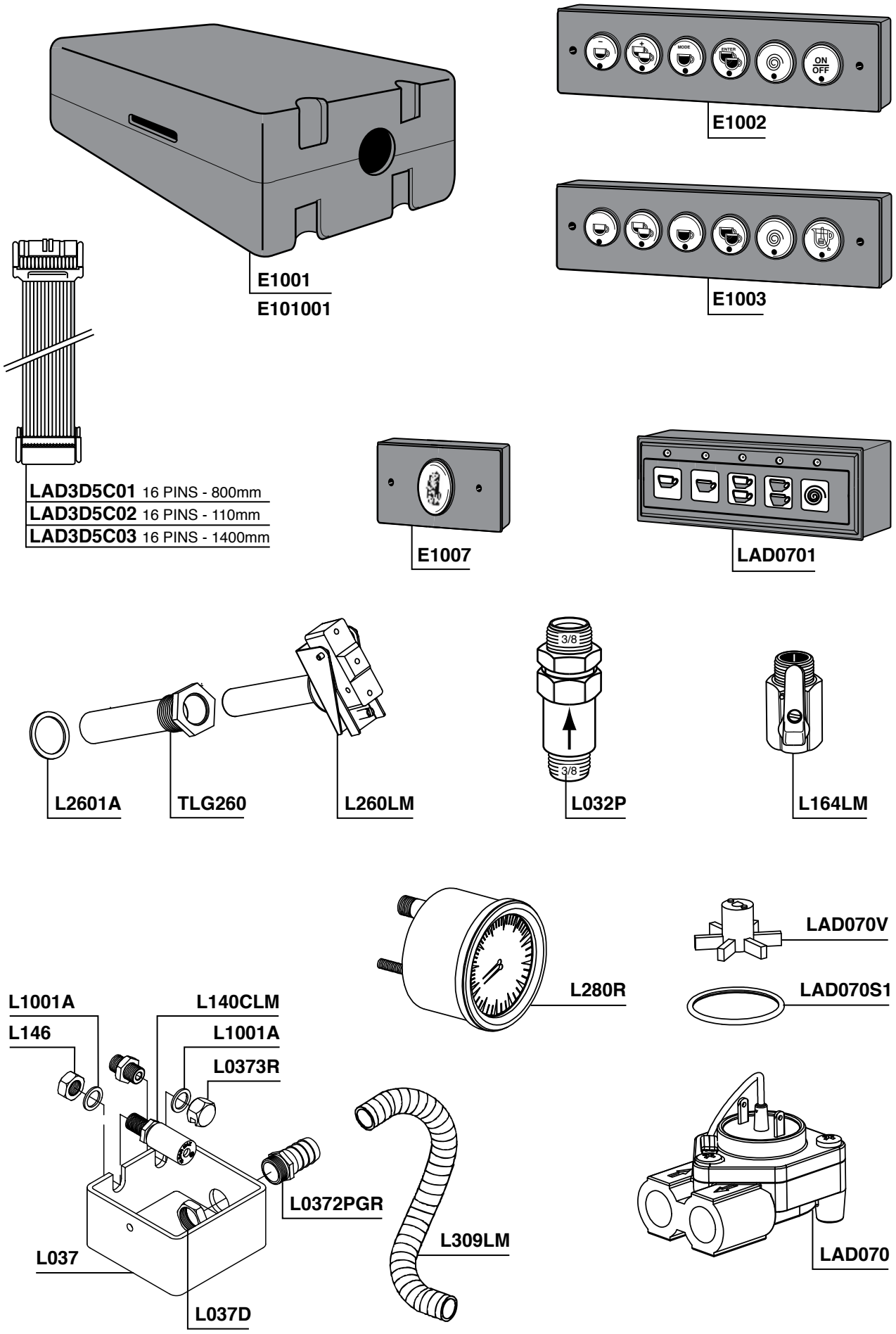
E1001
E101001
E1002
E1003
LAD3D5C01 16 PINS - 800mm
LAD3D5C02 16 PINS - 110mm
LAD3D5C03 16 PINS - 1400mm
E1007
LAD0701
L2601A
TLG260
L260LM
3/8
3/8
L032P
L164LM
L280R
LAD070V
LAD070S1
L1001A
L146
L140CLM
L1001A
L0373R
L0372PGR
L309LM
L037
L037D
LAD070

LA SAN MARCO

630403

700418/T
TEFLON

Ø 50

630404
MOD.85-95

700418/T
TEFLON

630405

700418/T
TEFLON

630406

700486

700485

700396
700396/T=TEFLON

700419

700450

700451

524767

551934

700176 =LUCIFER
700177 =PARKER

700402

700400
700400/V

700475

700401

547101

700439

700181/22 =V220
700181/11 =V110
700179/22 =V220
700179/11 =V110

LUCIFER
PARKER

700395

615978

700301/22 =V220
700301/11 =V110
LUCIFER

700152/22 =V220
700152/11 =V110
PARKER

700148/Z

700113/SM

LA SAN MARCO

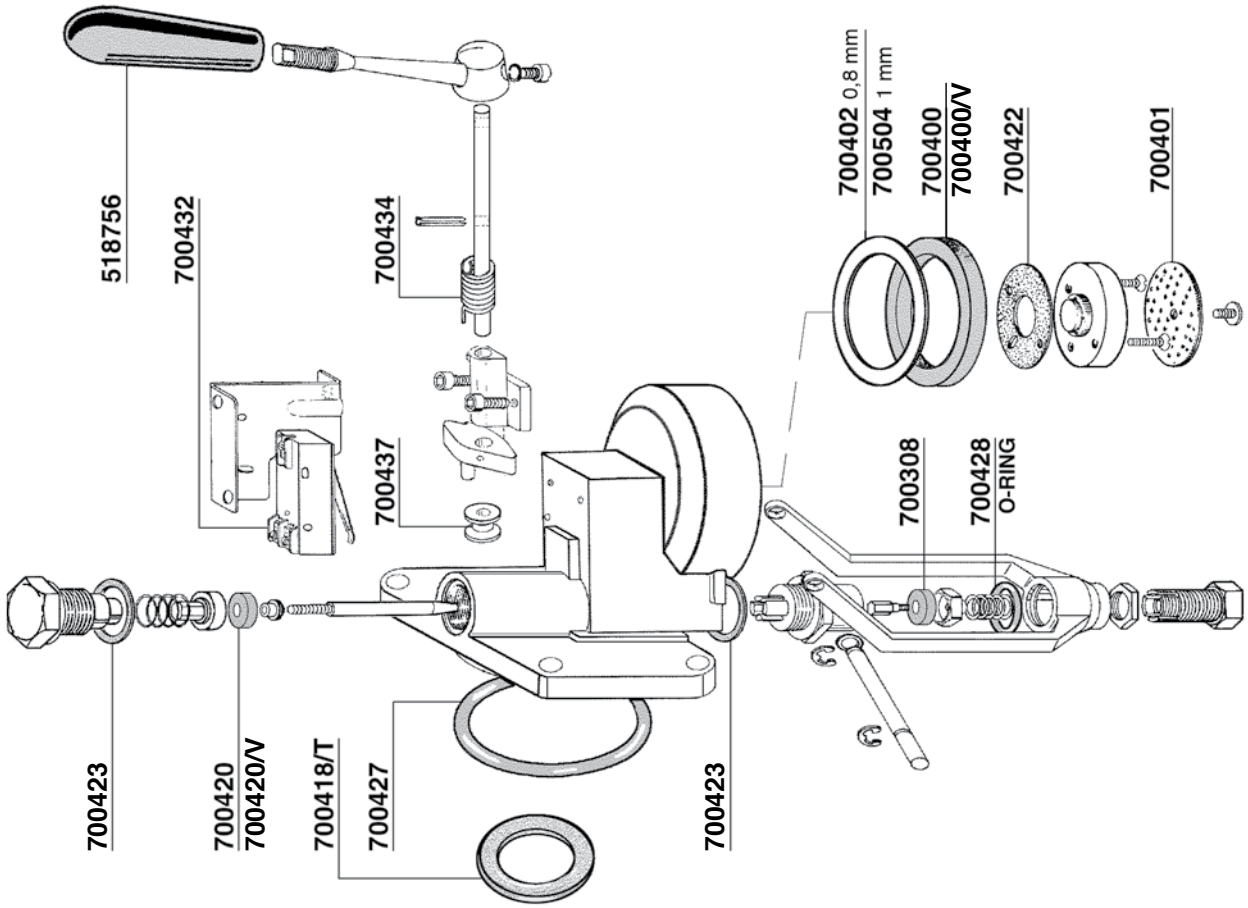
518756
700432
700434
700437
700423
700420
700420/V
700418/T
700427
700423
700402 0,8 mm
700504 1 mm
700400
700400/V
700422
700401
700308
700428
O-RING

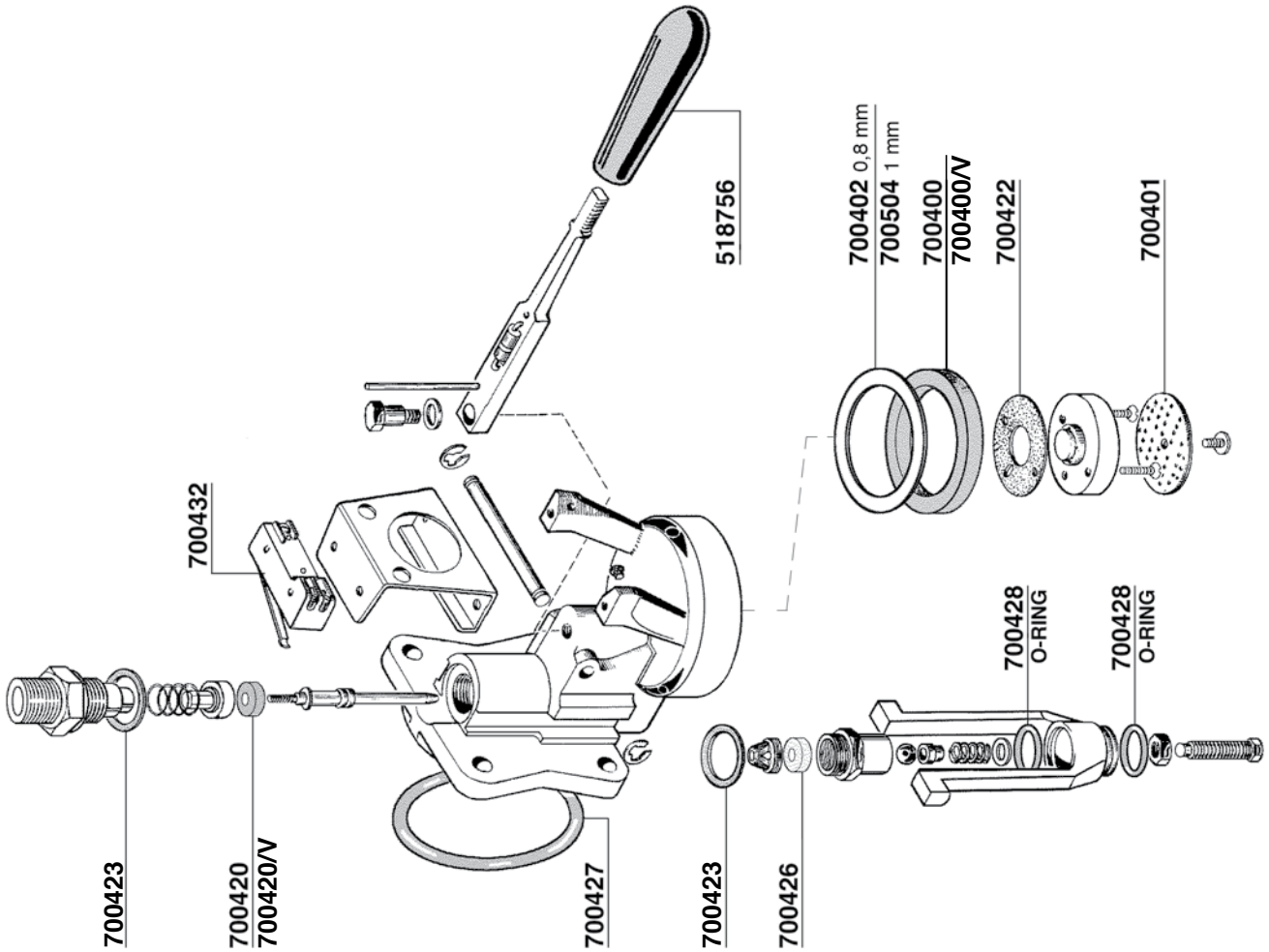
518756
700432
700423
700420
700420/V
700427
700423
700426
700402 0,8 mm
700504 1 mm
700400
700400/V
700422
700401
700428
O-RING
700428
O-RING

LA SAN MARCO

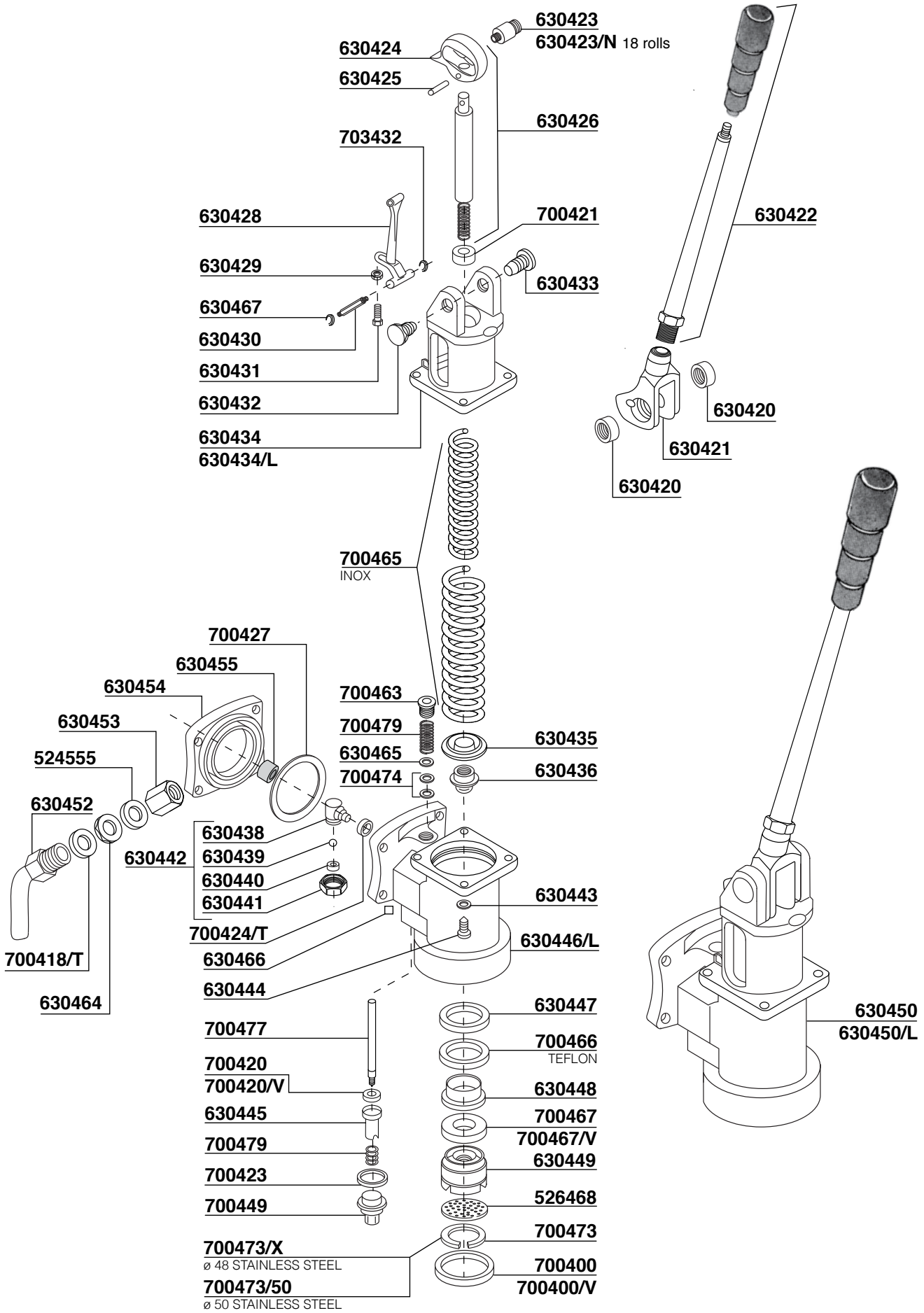
630423
630423/N 18 rolls
630424
630425
630426
703432
630428
700421
630422
630429
630433
630467
630430
630431
630432
630434
630434/L
630420
630421
630420
700465
INOX
700427
630455
630454
700463
630453
700479
630435
524555
630465
630436
700474
630452
630438
630442
630439
630440
630441
630443
700424/T
630446/L
700418/T
630466
630444
630464
630447
630450
630450/L
700477
700466
TEFLON
700420
700420/V
630448
630445
700467
700467/V
700479
630449
700423
526468
700449
700473
700473/X
ø 48 STAINLESS STEEL
700400
700473/50
ø 50 STAINLESS STEEL
700400/V

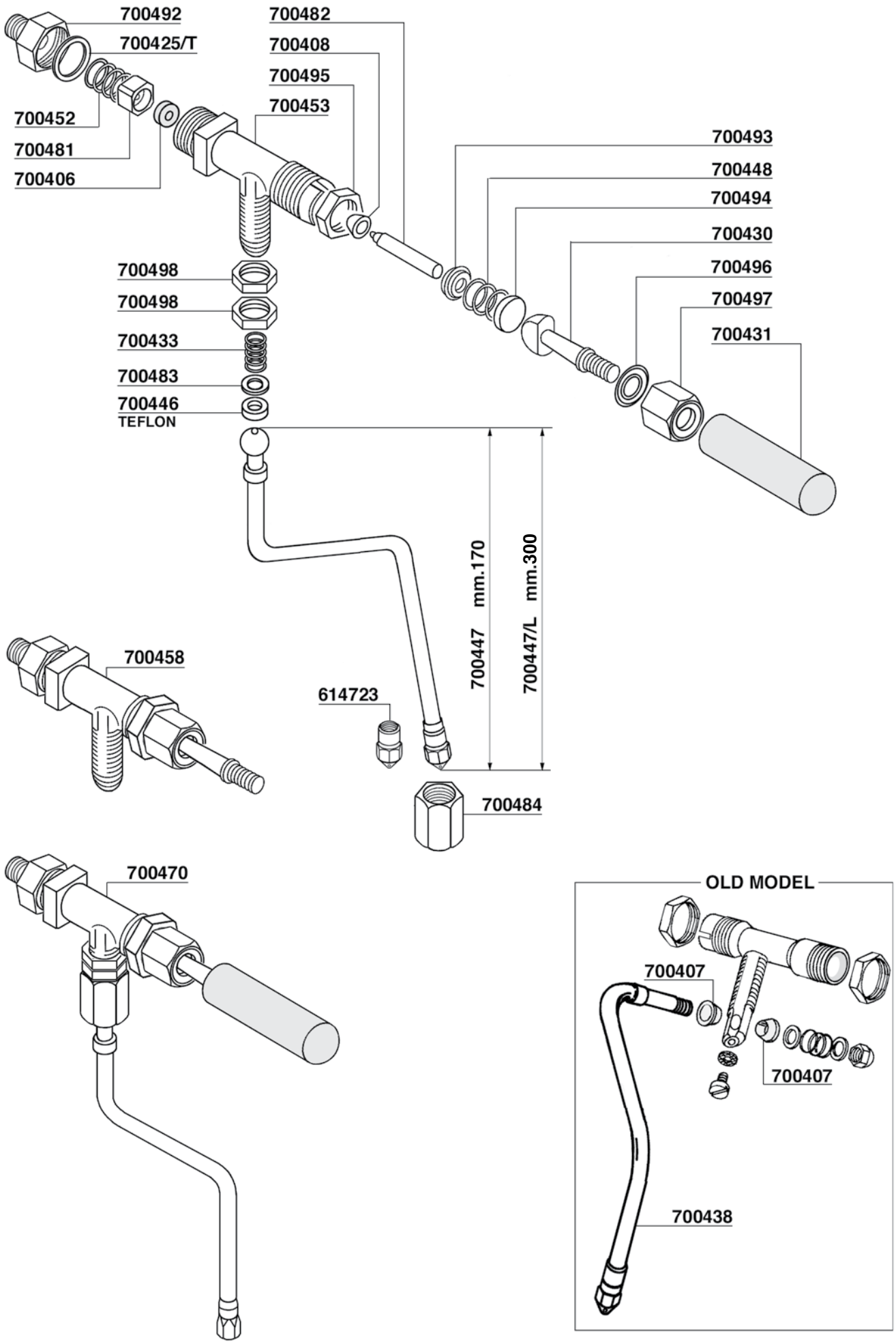
700492
700425/T
700452
700481
700406
700482
700408
700495
700453
700493
700448
700494
700430
700496
700497
700431
700498
700498
700433
700483
700446
TEFLON
700447 mm.170
700447/L mm.300
700458
614723
700484
700470
OLD MODEL
700407
700407
700438

LA SAN MARCO

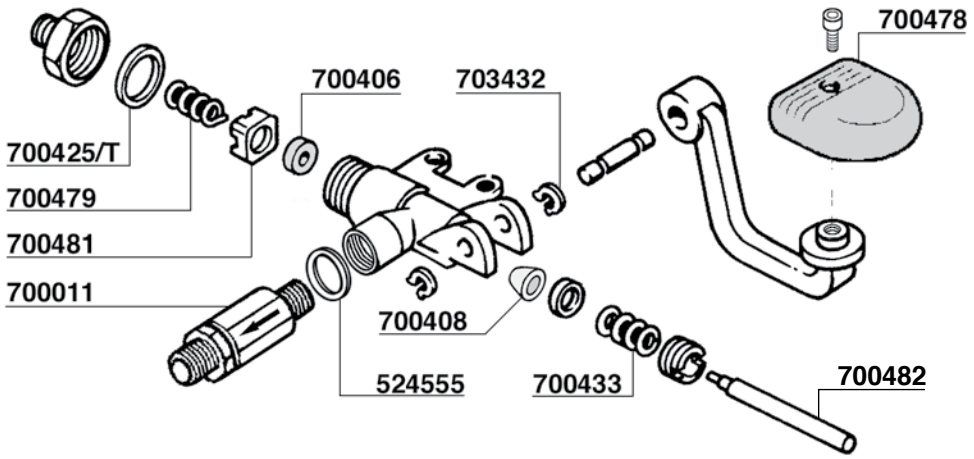
700478
700406
703432
700425/T
700479
700481
700011
700408
524555
700433
700482

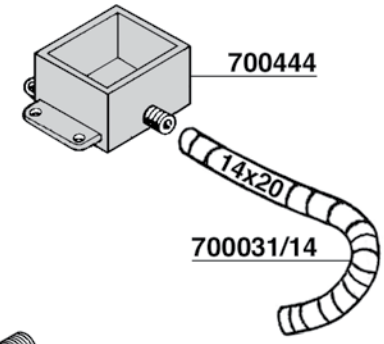
700444
14x20
700031/14

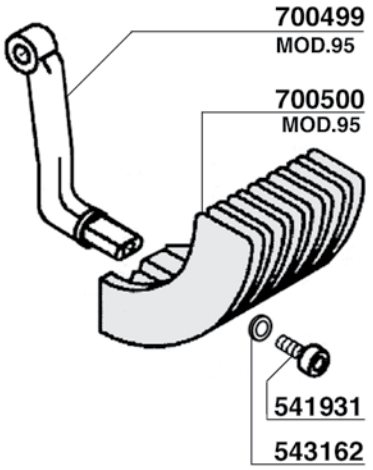
700499
MOD.95
700500
MOD.95
541931
543162

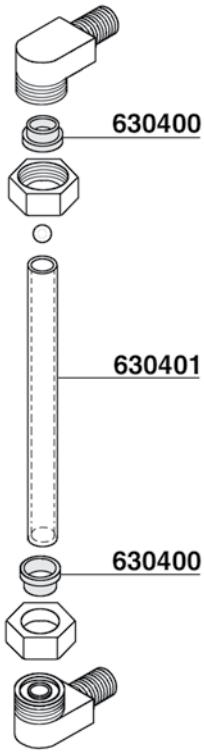
630400
630401
630400

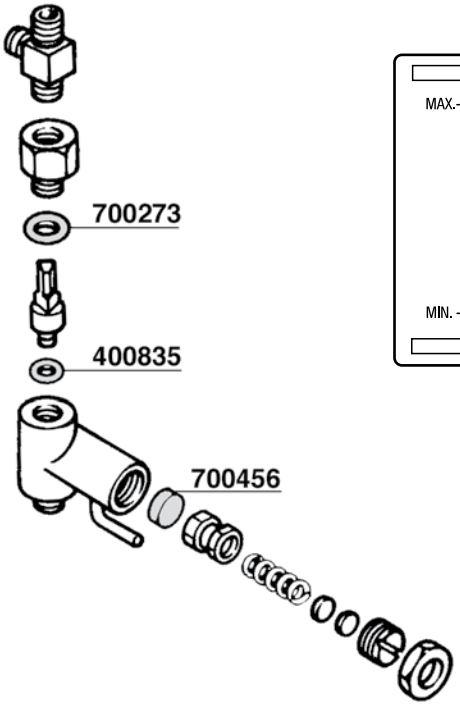
700273
400835
700456

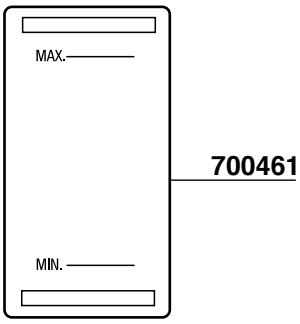
MAX.
MIN.
700461

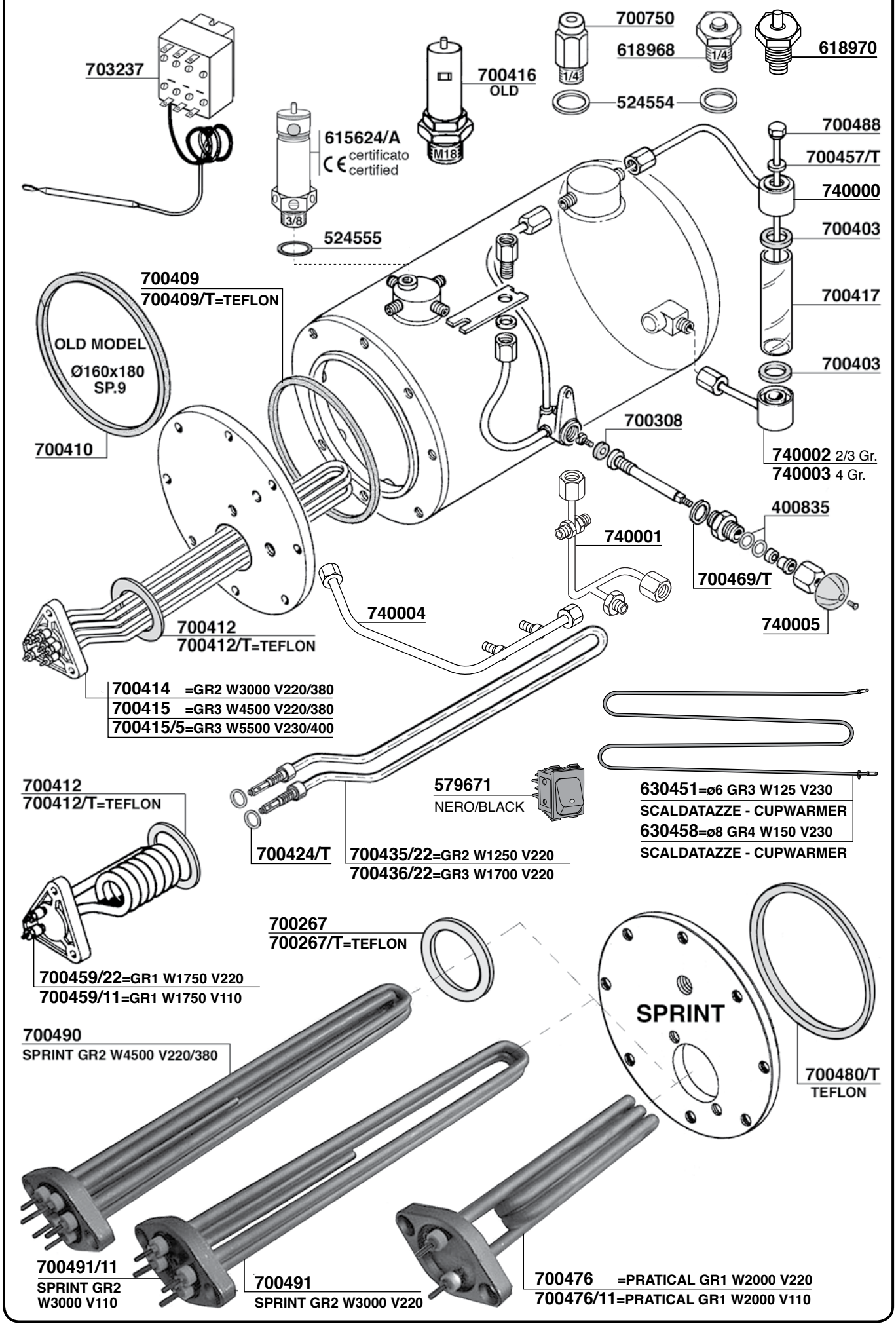
703237
700750
618968
1/4
618970
700416
OLD
M18
524554
615624/A
certificato
certified
3/8
524555
700488
700457/T
740000
700403
700417
700403
700409
700409/T=TEFLON
OLD MODEL
Ø160x180
SP.9
700410
700308
740002 2/3 Gr.
740003 4 Gr.
400835
740001
700469/T
740005
740004
700412
700412/T=TEFLON
700414 =GR2 W3000 V220/380
700415 =GR3 W4500 V220/380
700415/5=GR3 W5500 V230/400
579671
NERO/BLACK
630451=ø6 GR3 W125 V230
SCALDATAZZE - CUPWARMER
630458=ø8 GR4 W150 V230
SCALDATAZZE - CUPWARMER
700412
700412/T=TEFLON
700424/T
700435/22=GR2 W1250 V220
700436/22=GR3 W1700 V220
700267
700267/T=TEFLON
700459/22=GR1 W1750 V220
700459/11=GR1 W1750 V110
SPRINT
700490
SPRINT GR2 W4500 V220/380
700480/T
TEFLON
700491/11
SPRINT GR2
W3000 V110
700491
SPRINT GR2 W3000 V220
700476 =PRATICAL GR1 W2000 V220
700476/11=PRATICAL GR1 W2000 V110

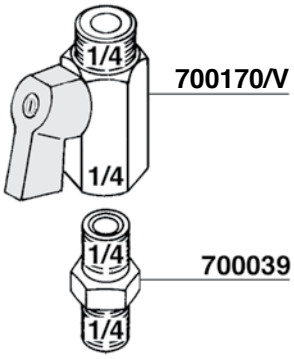

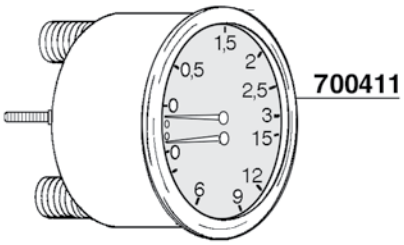

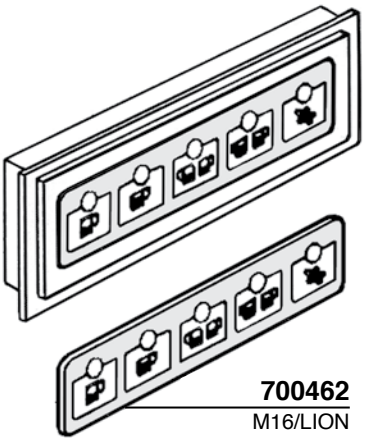

700440

MOLLA MOTORE MACININO
GRINDER MOTOR SPRING

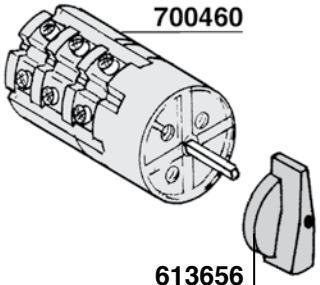

630416
SM85E

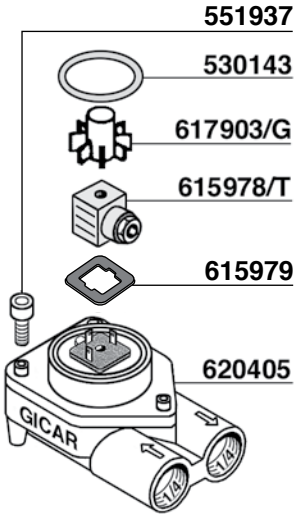

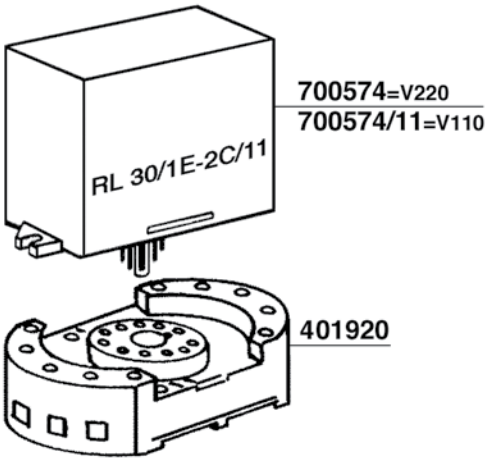

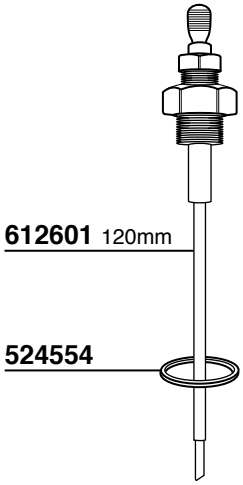

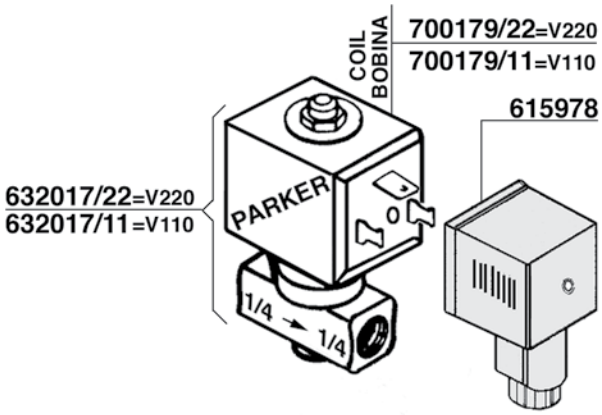

THERMOMETER
0 - 100°C

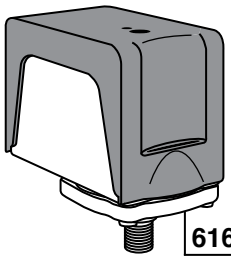

616597 CE/UL

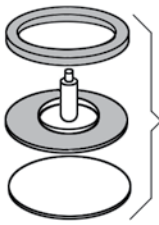

700124
Ø55mm

700464

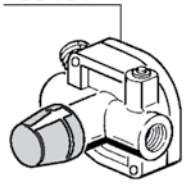

621080
PUSH BUTTON

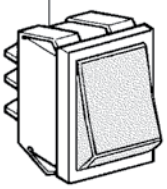

700429
INTERRUTTORE
SWITCH

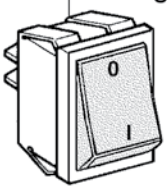

700399
PLASTIC

700399/G
GOMMA-RUBBER

700399/S
PLASTIC

NEW
GOMMA-RUBBER
700616

612143/C
630407
PLASTIC
700413
PLASTIC

700405
14gr.
CON BORDINO
700405/A
21gr.

700404
9gr.
CON BORDINO

700487
FILTRO CIECO
BLIND FILTER

617940
TAPPO CROMATO
CHROMED PLUG
617938

700024
511672
502003

630411
SUPPORTO DISPLAY+THE'
TEA DISPLAY COVER

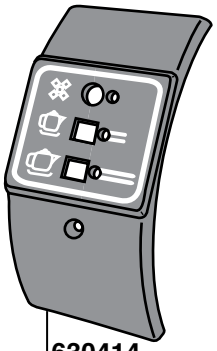

630414
SUPPORTO DOSATURA
DOSING DISPLAY

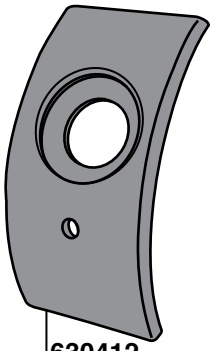

630412
MASCHERA RUBINETTO
VAPORE-ACQUA
WATER-STEAM TAP COVER

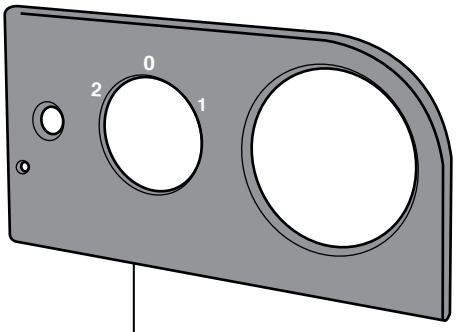

630413
MASCHERA INTERRUTTORE-
MANOPOLA GAS
SWITCH-GAS DIAL COVER

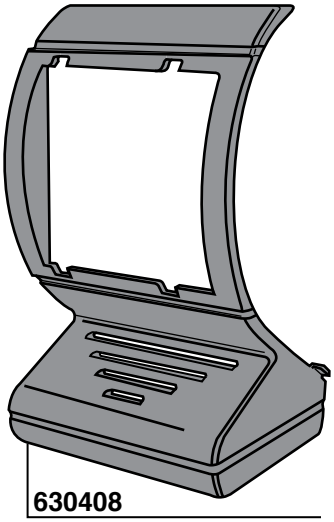

630408
MASCHERA GRUPPO T1 '95'
GROUP COVER T1 '95'

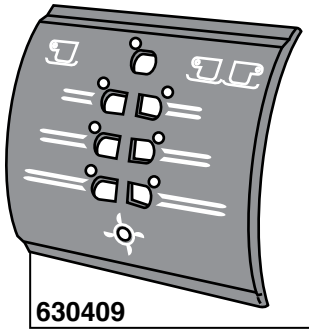

630409
SUPPORTO PULSANTI DOSI
DOSING BUTTONS SUPPORT

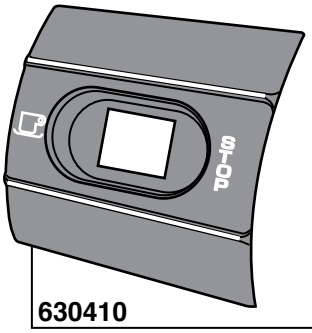

630410
SUPPORTO INTERRUTTORE ON-OFF
ON-OFF SWITCH SUPPORT

LA SPAZIALE

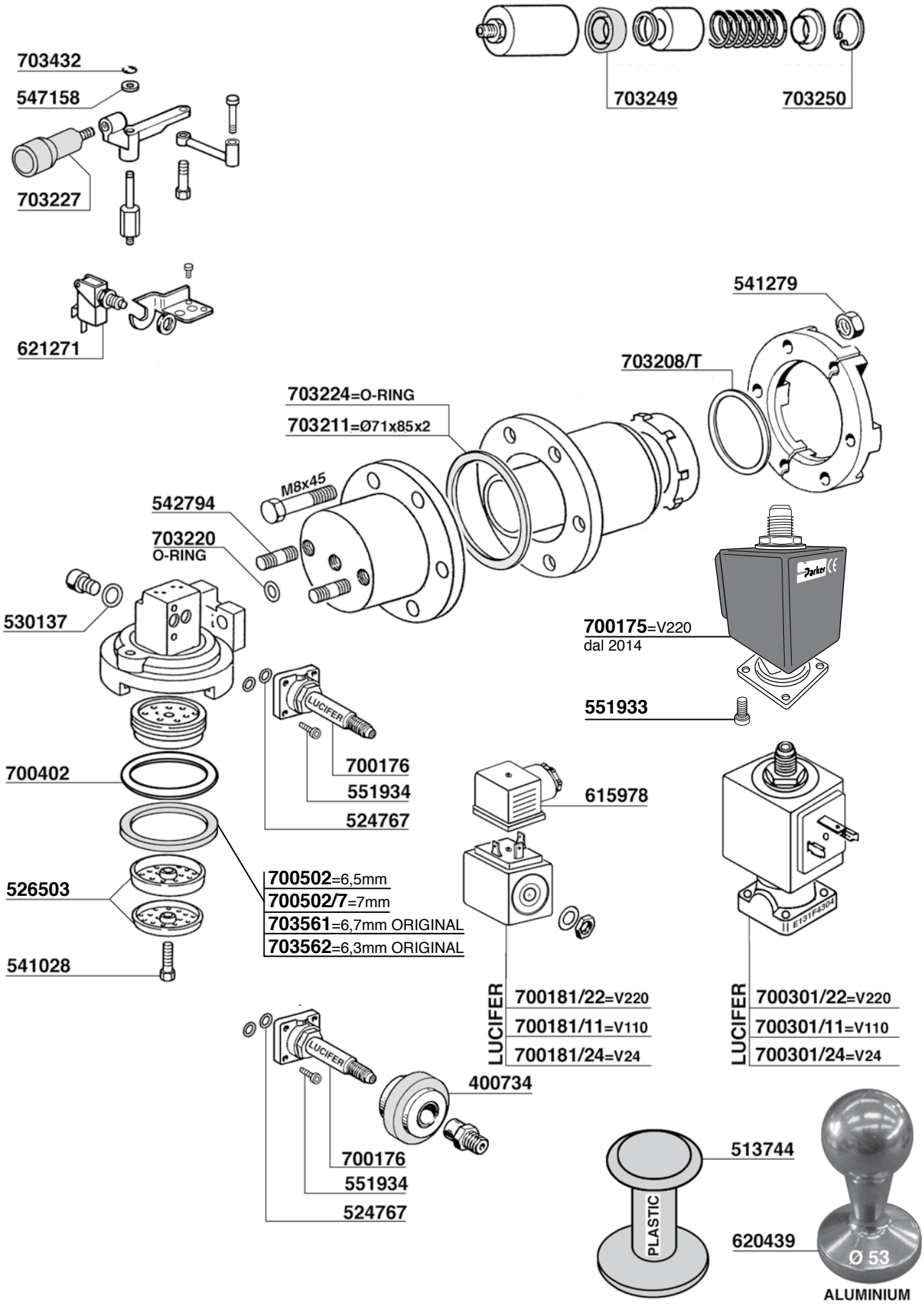
703249
703250
703432
547158
703227
621271
541279
703208/T
703224=O-RING
703211=Ø71x85x2
M8x45
542794
703220
O-RING
530137
700175=V220
dal 2014
551933
700176
551934
524767
700402
615978
700502=6,5mm
700502/7=7mm
703561=6,7mm ORIGINAL
703562=6,3mm ORIGINAL
526503
541028
LUCIFER
700181/22=V220
700181/11=V110
700181/24=V24
LUCIFER
700301/22=V220
700301/11=V110
700301/24=V24
400734
700176
551934
524767
513744
PLASTIC
620439
Ø 53
ALUMINIUM

LA SPAZIALE

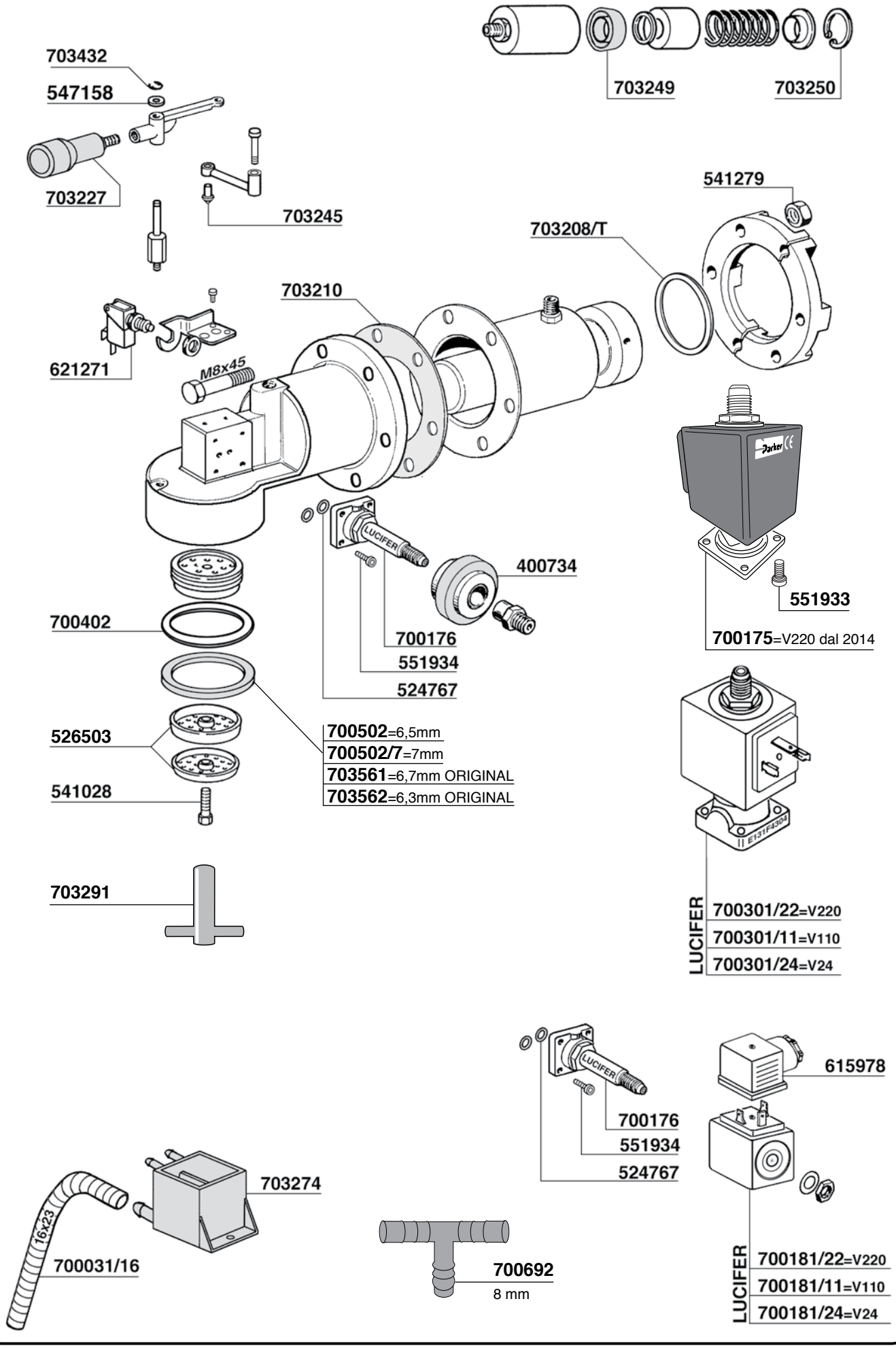
703249
703250
703432
547158
703227
703245
541279
703208/T
703210
621271
M8x45
400734
551933
700402
700176
551934
524767
700175=V220 dal 2014
526503
700502=6,5mm
700502/7=7mm
703561=6,7mm ORIGINAL
703562=6,3mm ORIGINAL
541028
703291
LUCIFER
700301/22=V220
700301/11=V110
700301/24=V24
615978
700176
551934
524767
703274
16x23
700031/16
700692
8 mm
LUCIFER
700181/22=V220
700181/11=V110
700181/24=V24

LA SPAZIALE

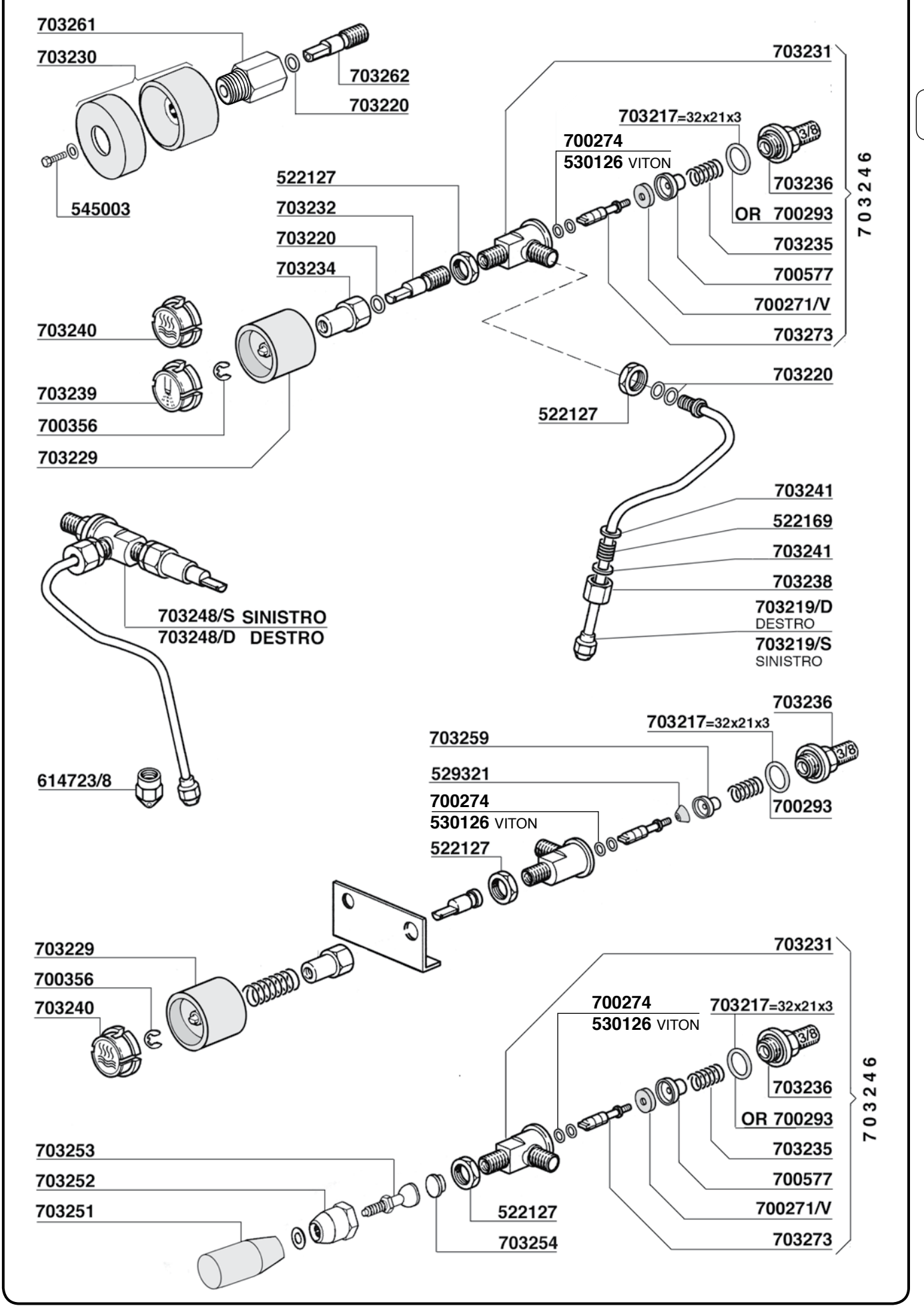
703261
703230
703262
703220
545003
703231
703217=32x21x3
700274
530126 VITON
703236
OR 700293
703235
700577
700271/V
703273
703246
522127
703232
703220
703234
703240
703239
700356
703229
703220
522127
703241
522169
703241
703238
703219/D
DESTRO
703219/S
SINISTRO
703248/S SINISTRO
703248/D DESTRO
614723/8
703236
703217=32x21x3
703259
529321
700293
700274
530126 VITON
522127
703229
700356
703240
703231
700274
530126 VITON
703217=32x21x3
703236
OR 700293
703235
700577
700271/V
703273
703246
703253
703252
703251
522127
703254

LA SPAZIALE

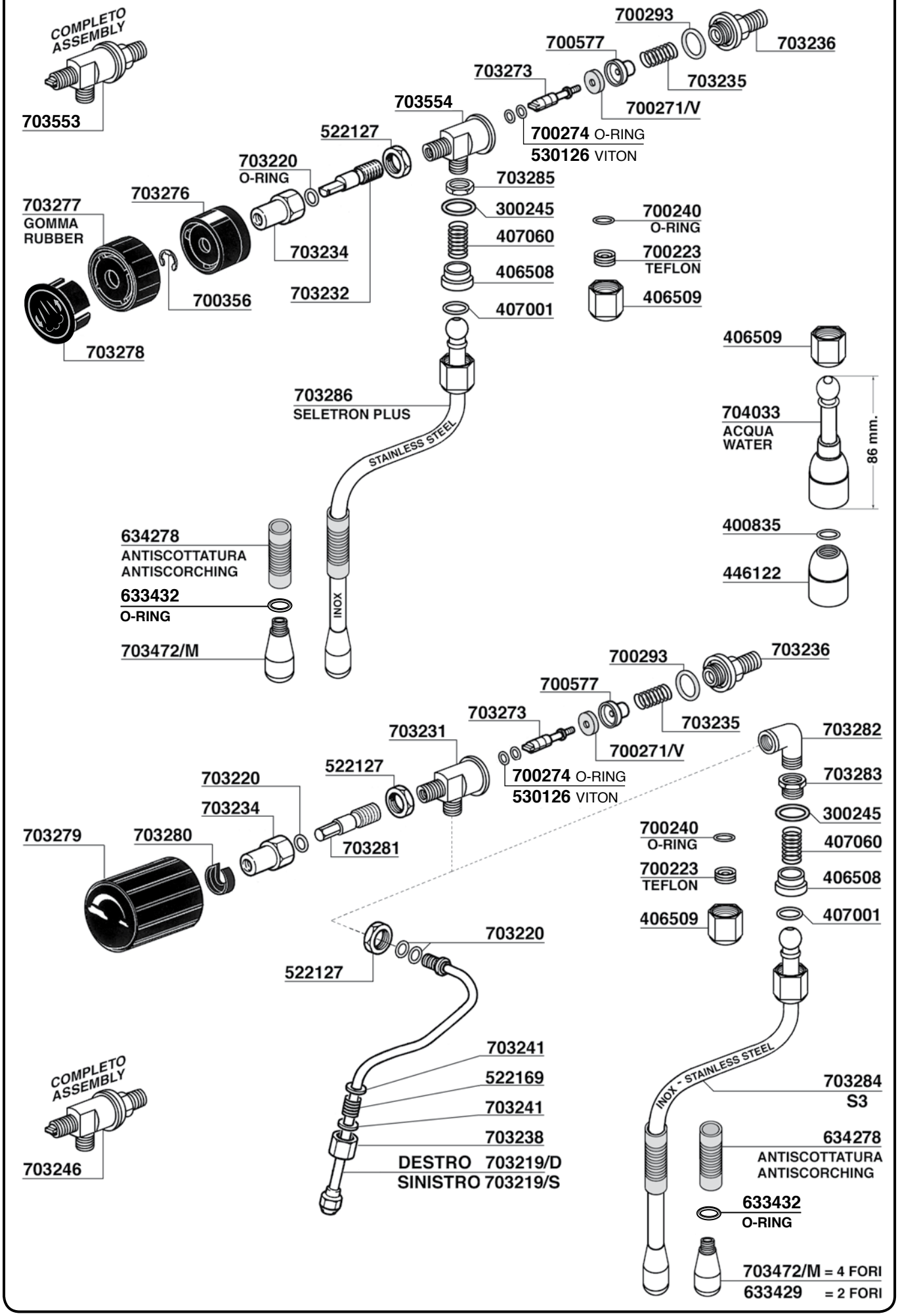
COMPLETO ASSEMBLY
703553
700293
703236
700577
703235
703273
700271/V
703554
700274 O-RING
530126 VITON
522127
703220
O-RING
703285
703276
703277
GOMMA
RUBBER
300245
700240
O-RING
407060
703234
700223
TEFLON
406508
703232
406509
700356
407001
703278
406509
703286
SELETRON PLUS
704033
ACQUA
WATER
86 mm.
STAINLESS STEEL
400835
634278
ANTISCOTTATURA
ANTISCORCHING
446122
633432
O-RING
INOX
703472/M
700293
703236
700577
703235
703273
703282
703231
700271/V
522127
700274 O-RING
530126 VITON
703283
703220
703234
300245
703279
703280
703281
700240
O-RING
407060
700223
TEFLON
406508
406509
407001
703220
522127
703241
522169
703241
703238
DESTRO 703219/D
SINISTRO 703219/S
COMPLETO ASSEMBLY
703246
INOX - STAINLESS STEEL
703284
S3
634278
ANTISCOTTATURA
ANTISCORCHING
633432
O-RING
703472/M = 4 FORI
633429 = 2 FORI

LA SPAZIALE

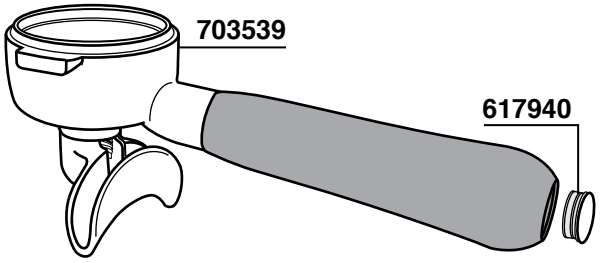
703539
617940

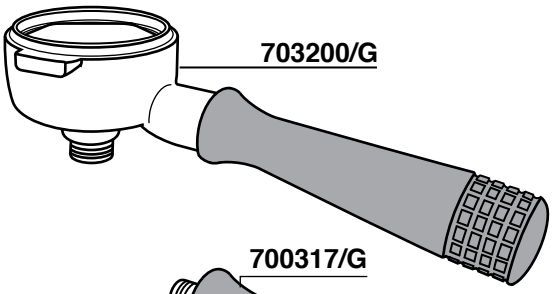
703200/G

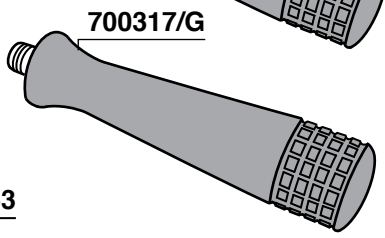
700317/G

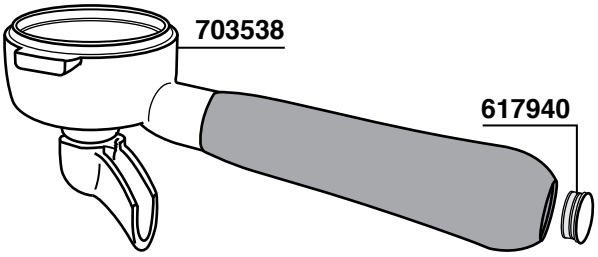
703538
617940

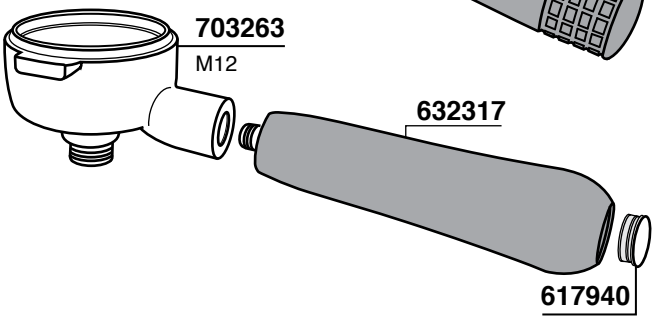
703263
M12
632317
617940

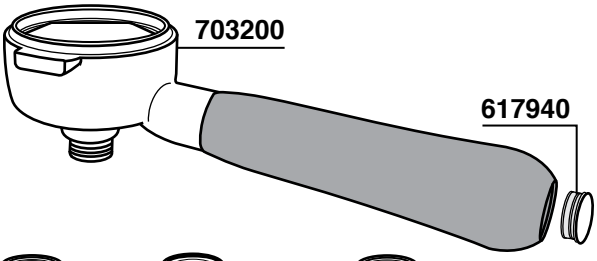
703200
617940

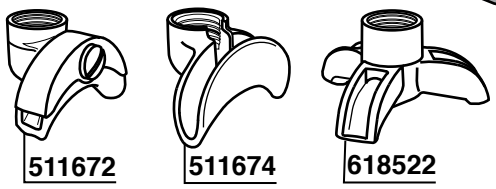
511672
511674
618522

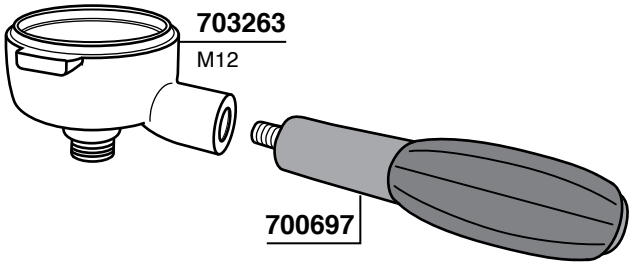
703263
M12
700697

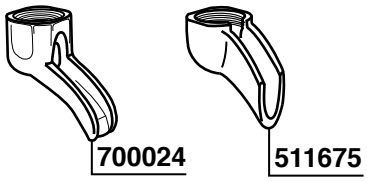
700024
511675

502003

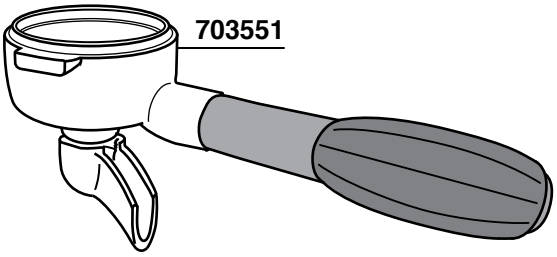
703551

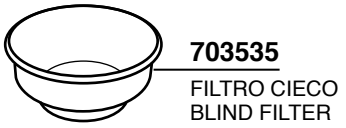
703535
FILTRO CIECO
BLIND FILTER

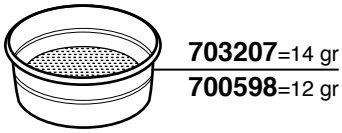
703207=14 gr
700598=12 gr

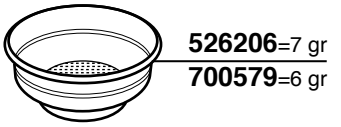
526206=7 gr
700579=6 gr

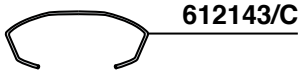
612143/C

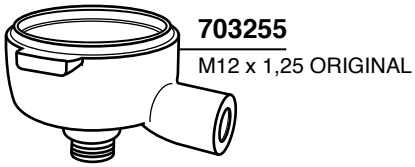
703255
M12 x 1,25 ORIGINAL

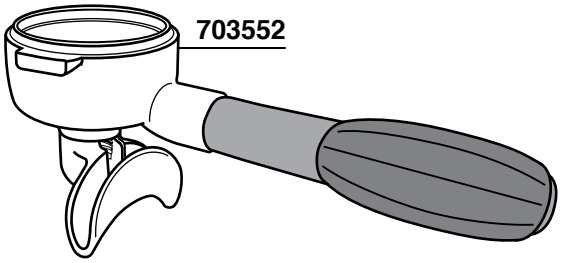
703552

LA SPAZIALE

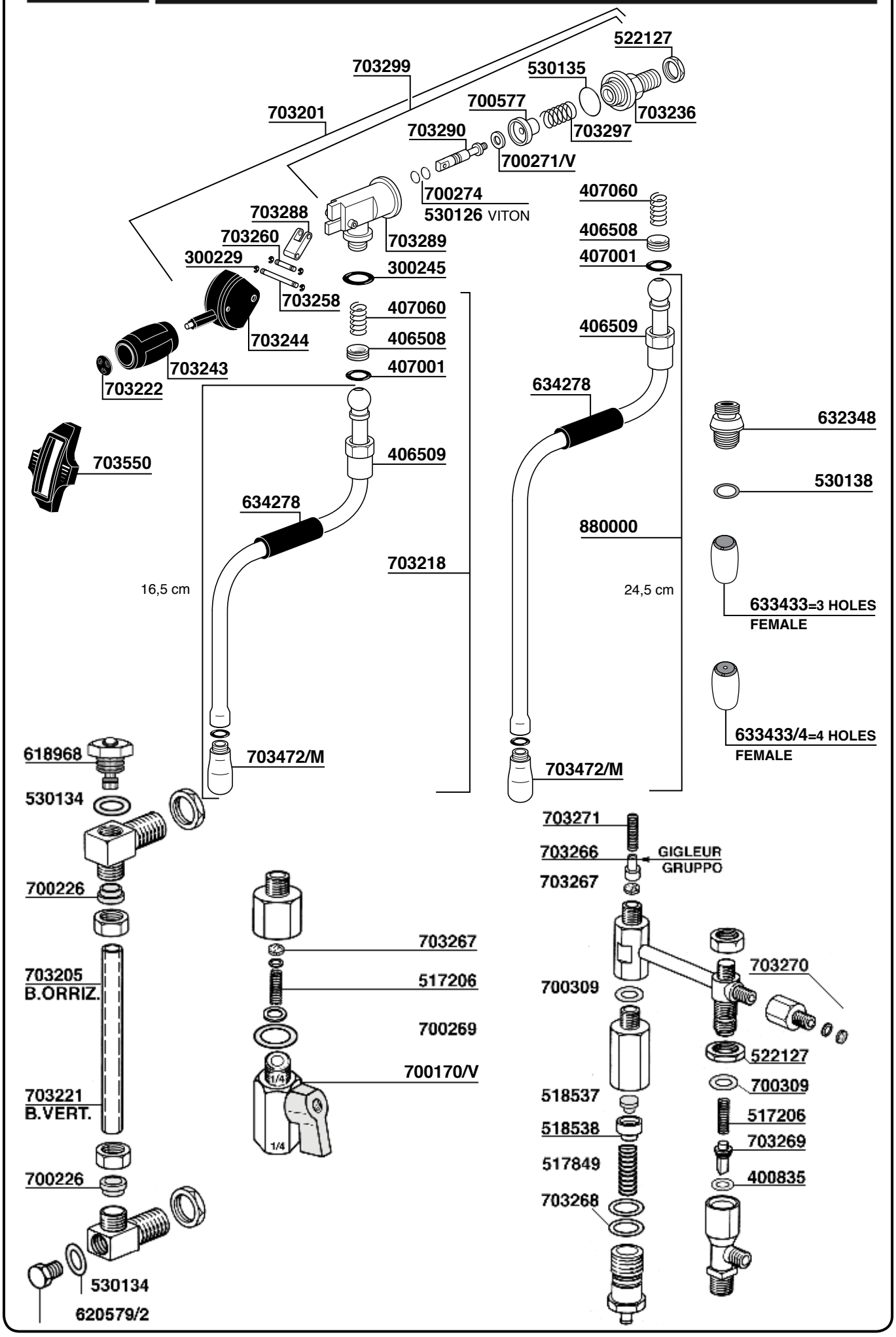
522127
703299
530135
703201
700577
703236
703290
703297
700271/V
700274
530126 VITON
407060
703288
406508
703260
703289
300229
407001
300245
703258
407060
406509
703244
406508
703243
407001
703222
634278
632348
703550
406509
530138
634278
880000
703218
16,5 cm
24,5 cm
633433=3 HOLES FEMALE
633433/4=4 HOLES FEMALE
618968
703472/M
703472/M
530134
703271
703266
GIGLEUR GRUPPO
703267
700226
703267
703205 B.ORRIZ.
517206
700309
703270
700269
522127
700170/V
700309
703221 B.VERT.
518537
517206
518538
703269
517849
400835
700226
703268
530134
620579/2

LA SPAZIALE

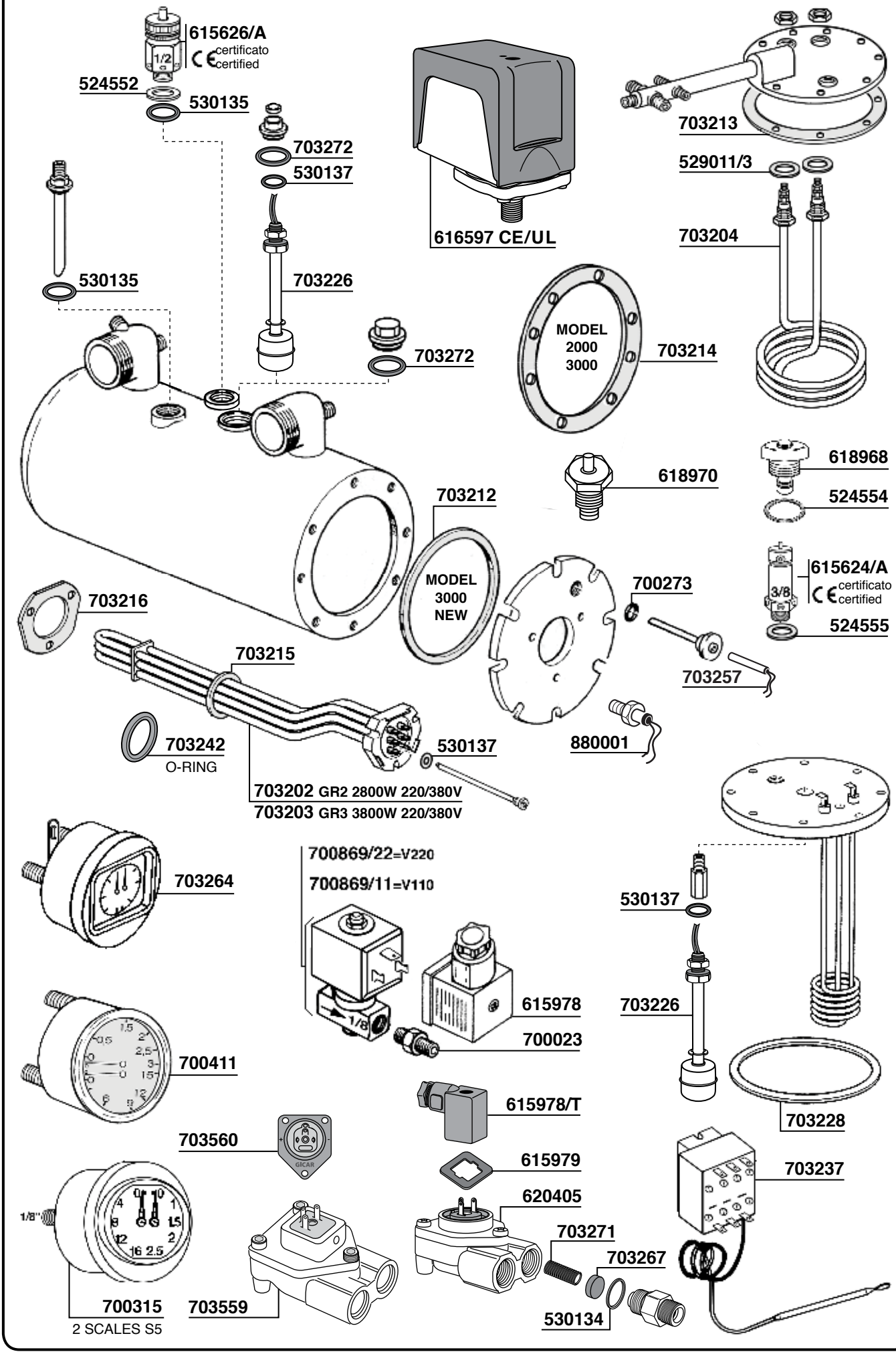
615626/A
certificato
certified
524552
530135
703272
530137
703226
530135
703272
616597 CE/UL
703213
529011/3
703204
MODEL
2000
3000
703214
618970
618968
524554
703212
MODEL
3000
NEW
700273
615624/A
certificato
certified
524555
703216
703215
703257
703242
O-RING
530137
880001
703202 GR2 2800W 220/380V
703203 GR3 3800W 220/380V
703264
700869/22=V220
700869/11=V110
530137
615978
703226
700023
700411
615978/T
703228
703560
615979
703237
620405
703271
703267
700315
2 SCALES S5
703559
530134

LA SPAZIALE

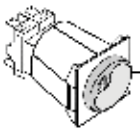

630381
NEW E.P.

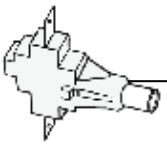

634027
3000 ELEKTRIC

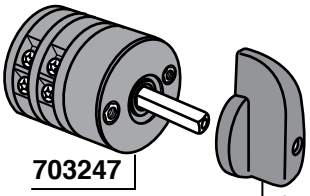

703247

613656

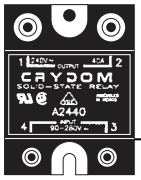

703296

703275
S3 E.P.

703540
S3

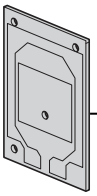

703541
S3

703292
NEW EK

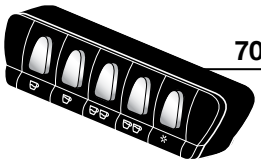

703543
S5

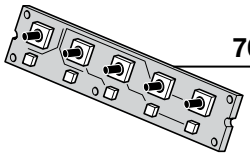

703545
S5

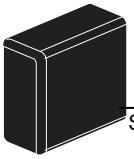

703542
S5-S8-S9 Compact
S2 Special 2 GR

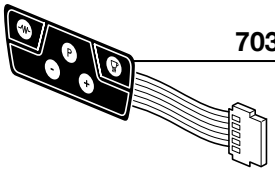

703544
S5

703546
S3 EK 2/3 GR

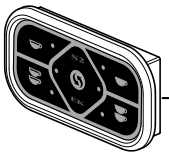

703548
S2 EK

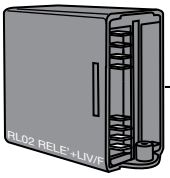

703287
NEW 300

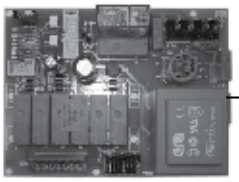

703547
S3 Seletron

703556
S8-S9

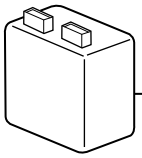

703293 1-2 GR 110V
NEW EK GR

703294 1-2 GR 230V
NEW EK GR

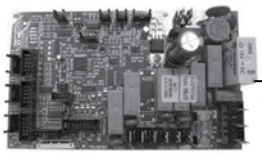

703558
S5-S8-S9 2/3G

703555
S8 - S9

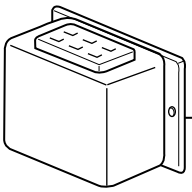

703295 3-4 GR 230V
NEW EK

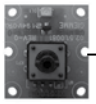

703557
S5-S8-S9
VERSIONE COMPAK

NUOVA SIMONELLI

AURELIA II S. - V - DIGIT

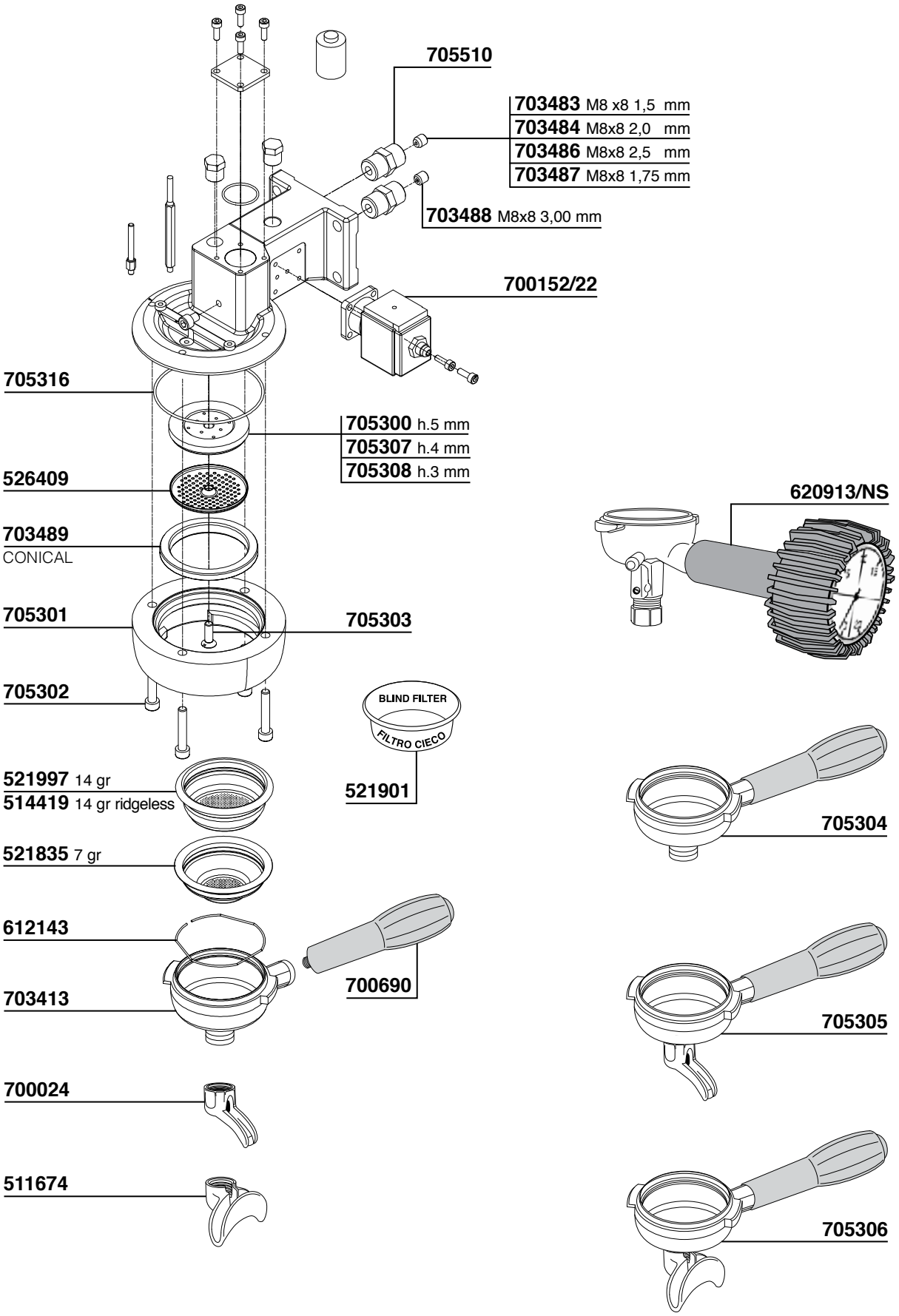

NUOVA SIMONELLI

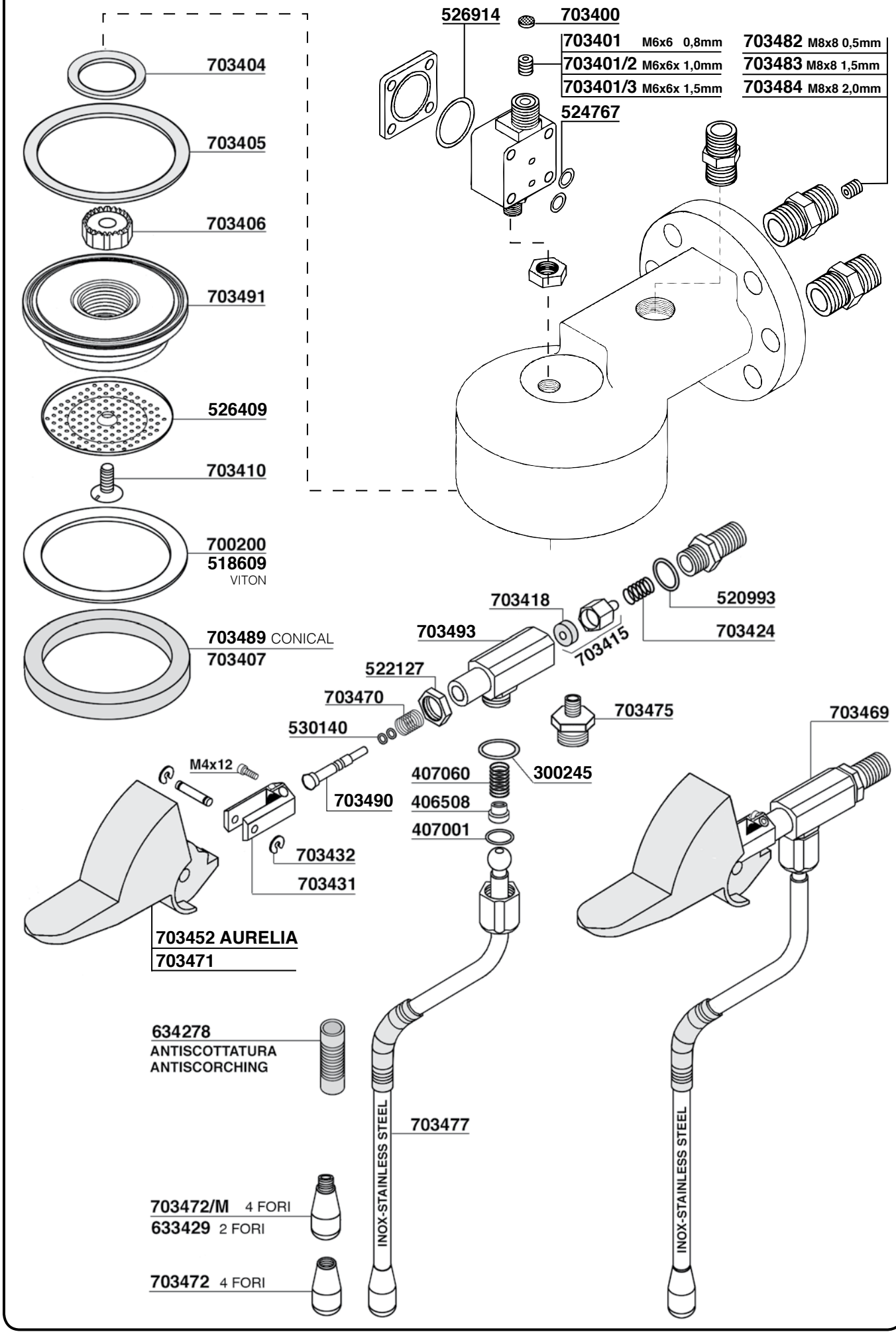

NUOVA SIMONELLI

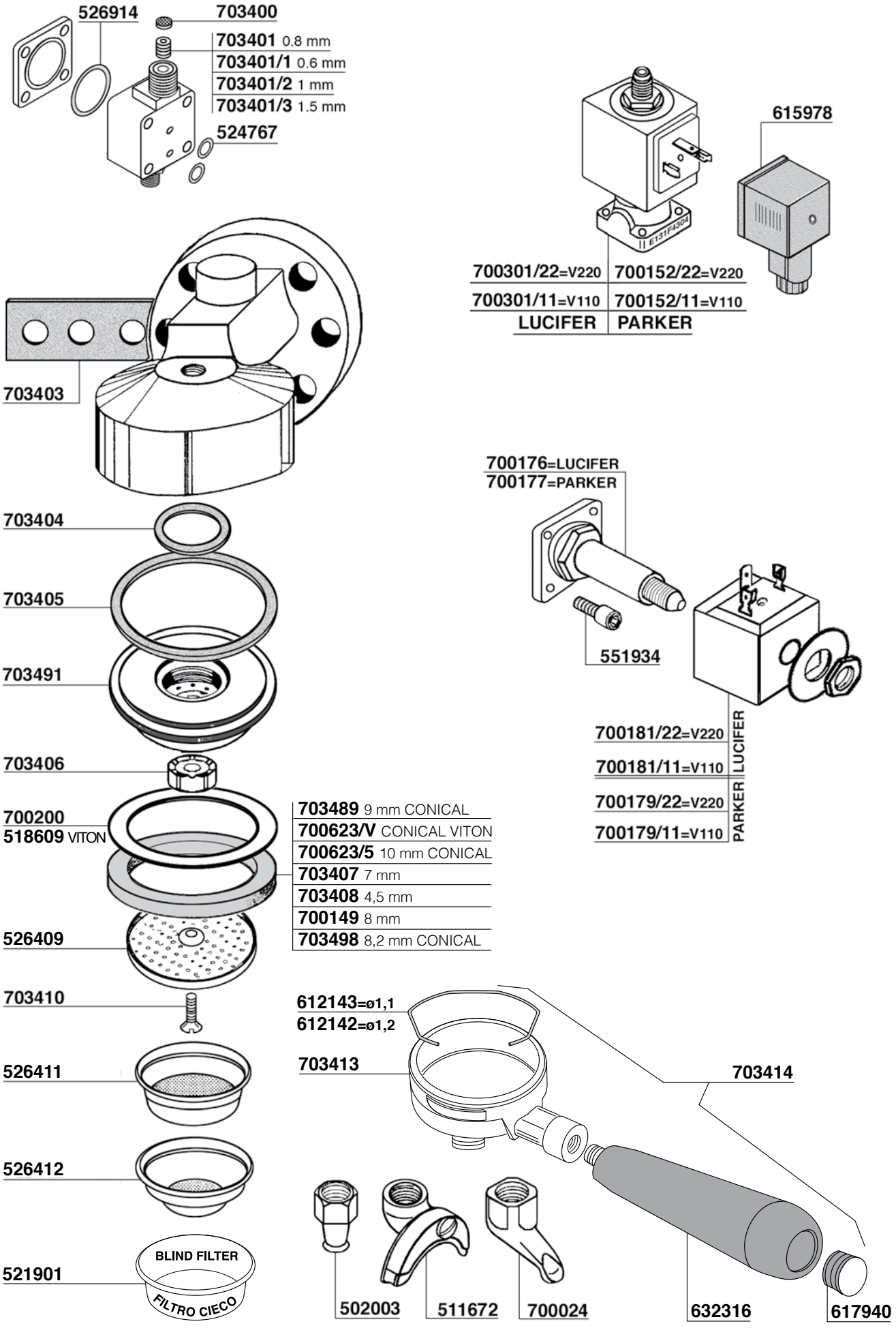

NUOVA SIMONELLI

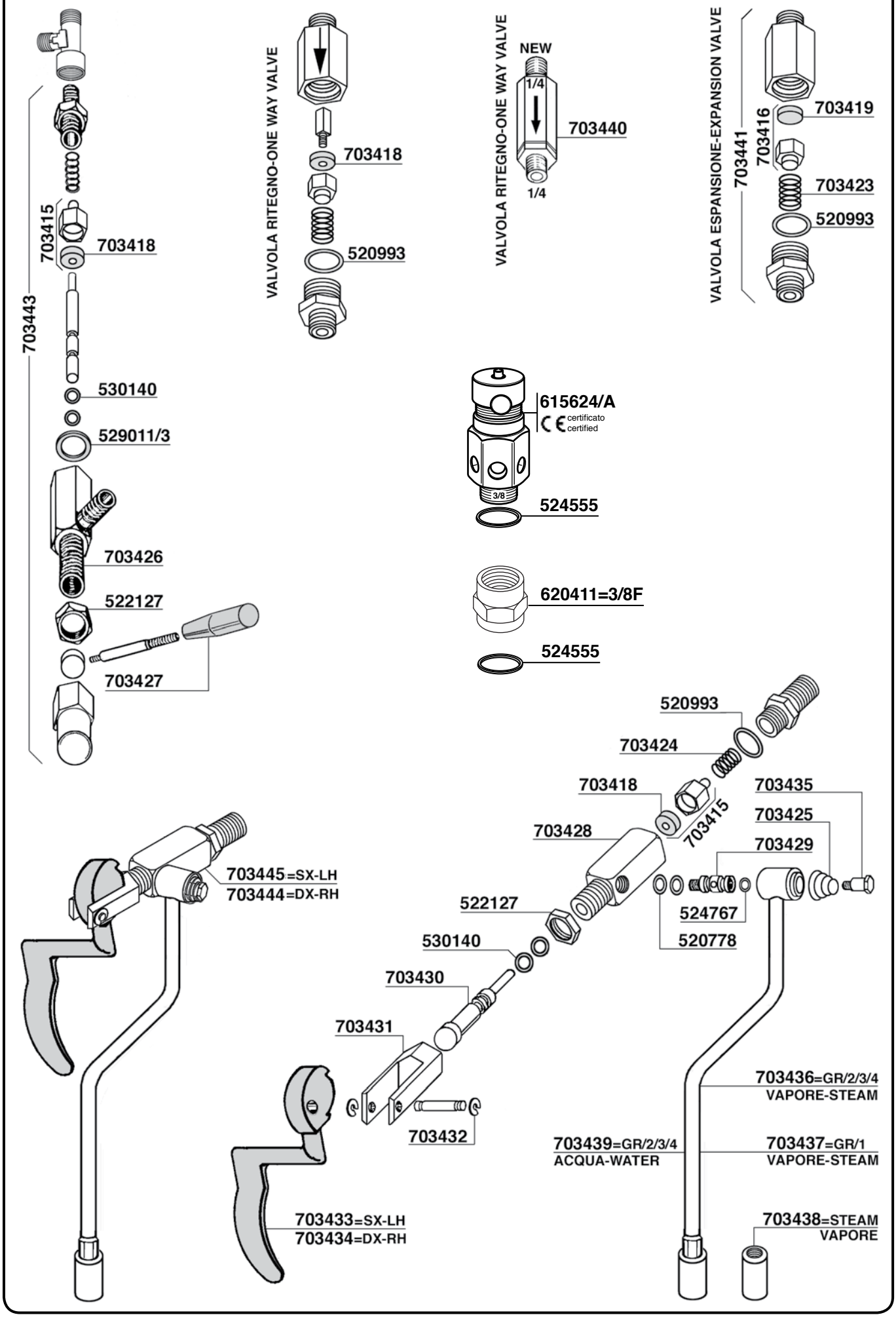

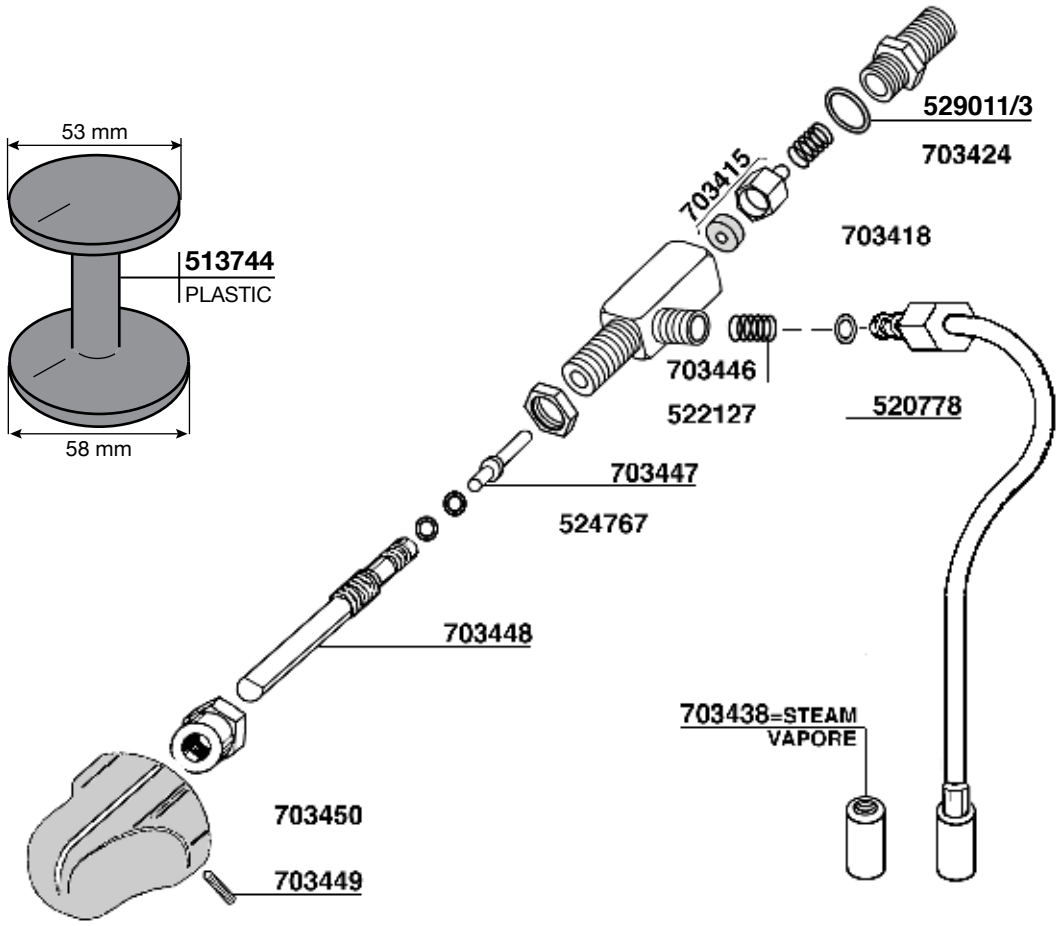
53 mm
513744
PLASTIC
58 mm
529011/3
703424
703415
703418
703446
522127
520778
703447
524767
703448
703438=STEAM
VAPORE
703450
703449

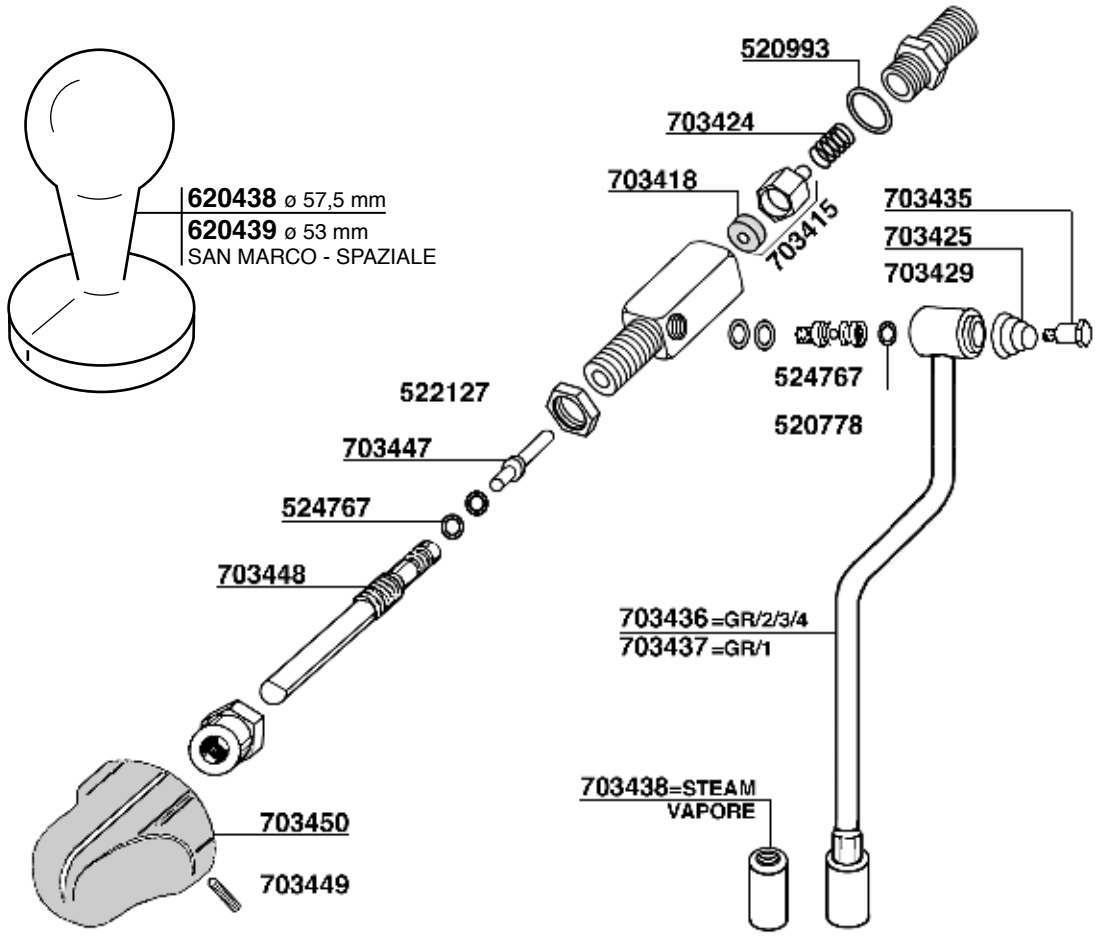
520993
703424
703418
620438 ø 57,5 mm
620439 ø 53 mm
SAN MARCO - SPAZIALE
703415
703435
703425
703429
524767
520778
522127
703447
524767
703448
703436=GR/2/3/4
703437=GR/1
703438=STEAM
VAPORE
703450
703449

703465/22=BEACH W1400 V220
703465/11=BEACH W1400 V110

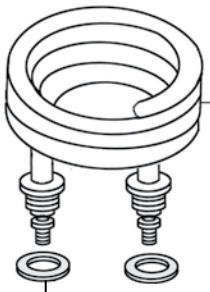

703466

703456/T

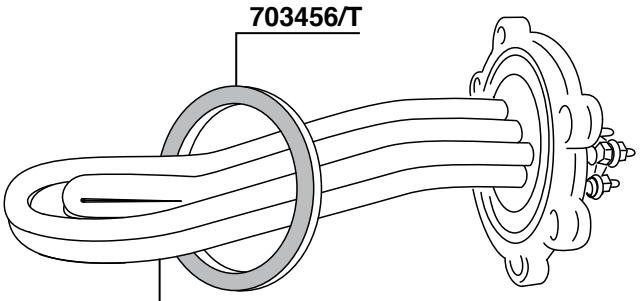

703457/22	=GR1 W1800 V220	mm.180
703457/11	=GR1 W1500 V110	mm.180
703467	=PREMIER W2700 V220/380	mm.180
703458	=GR2 W3000 V220/380	mm.340
703478	=GR2/3 W4500 V220/380	mm.340
703459	=GR3/4 W5000 V220/380	mm.590

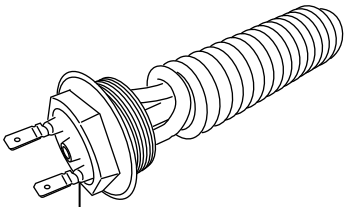

703497 1"1/4
2600W 230V

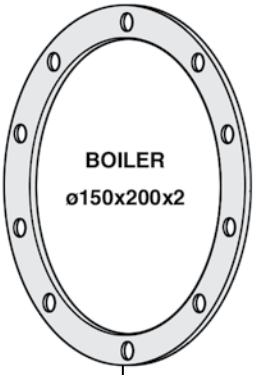

703476

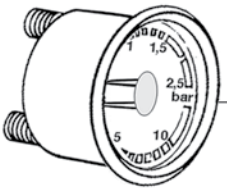

700874

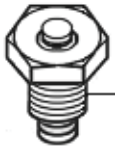

618968

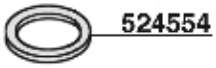

524554

700750

524554

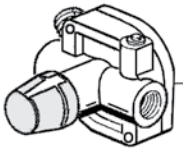

700464

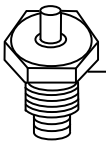

618970

617991

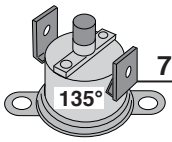

703492

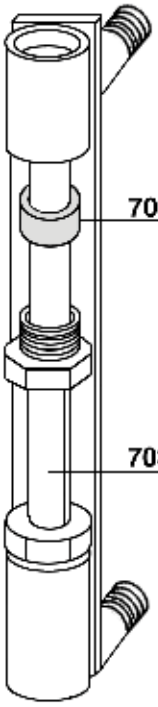

703464

703463

522127

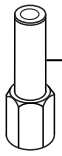

705309

530134

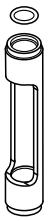

703462

530134

705516

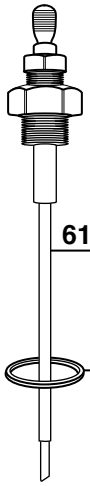

612601/L 140mm

524554

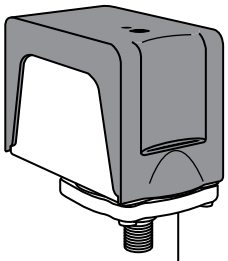

616597 CE/UL

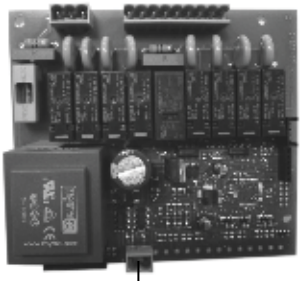

705310

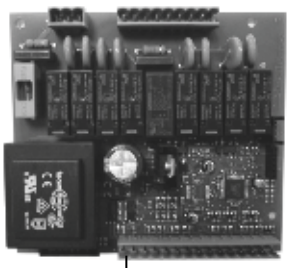

705311

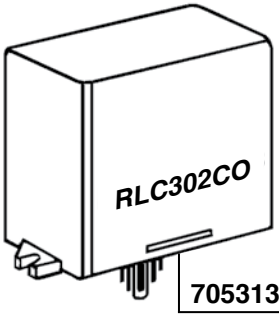

705313=V230

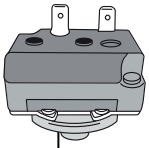

616589
CAMPINI TY85-B
1,4 BAR

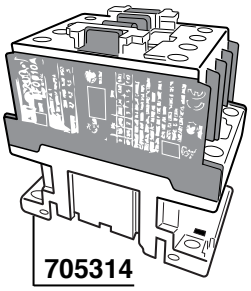

705314

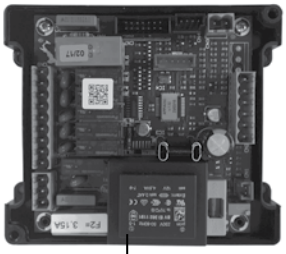

705315

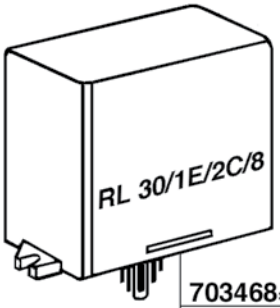

703468=V220
703468/11=V110

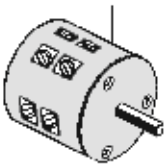

703460=GR/2
703461=GR/3/4

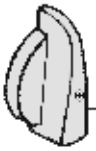

613656

611297

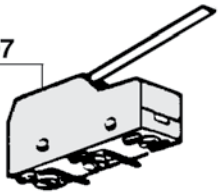

632017/22=V220
632017/11=V110

615978

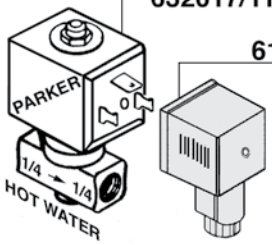

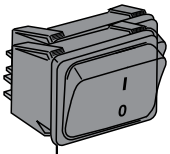

703453

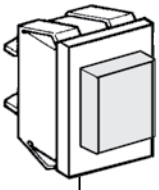

700180

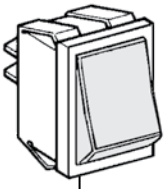

700429

615978/T

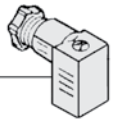

615979

530143

617903

551937

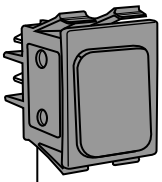

300042
RED LIGHT

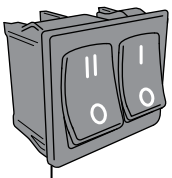

705312

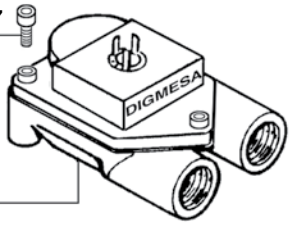

700621

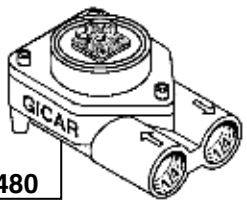

703480
1/4" - ø 1,2"

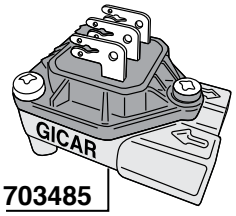

703485

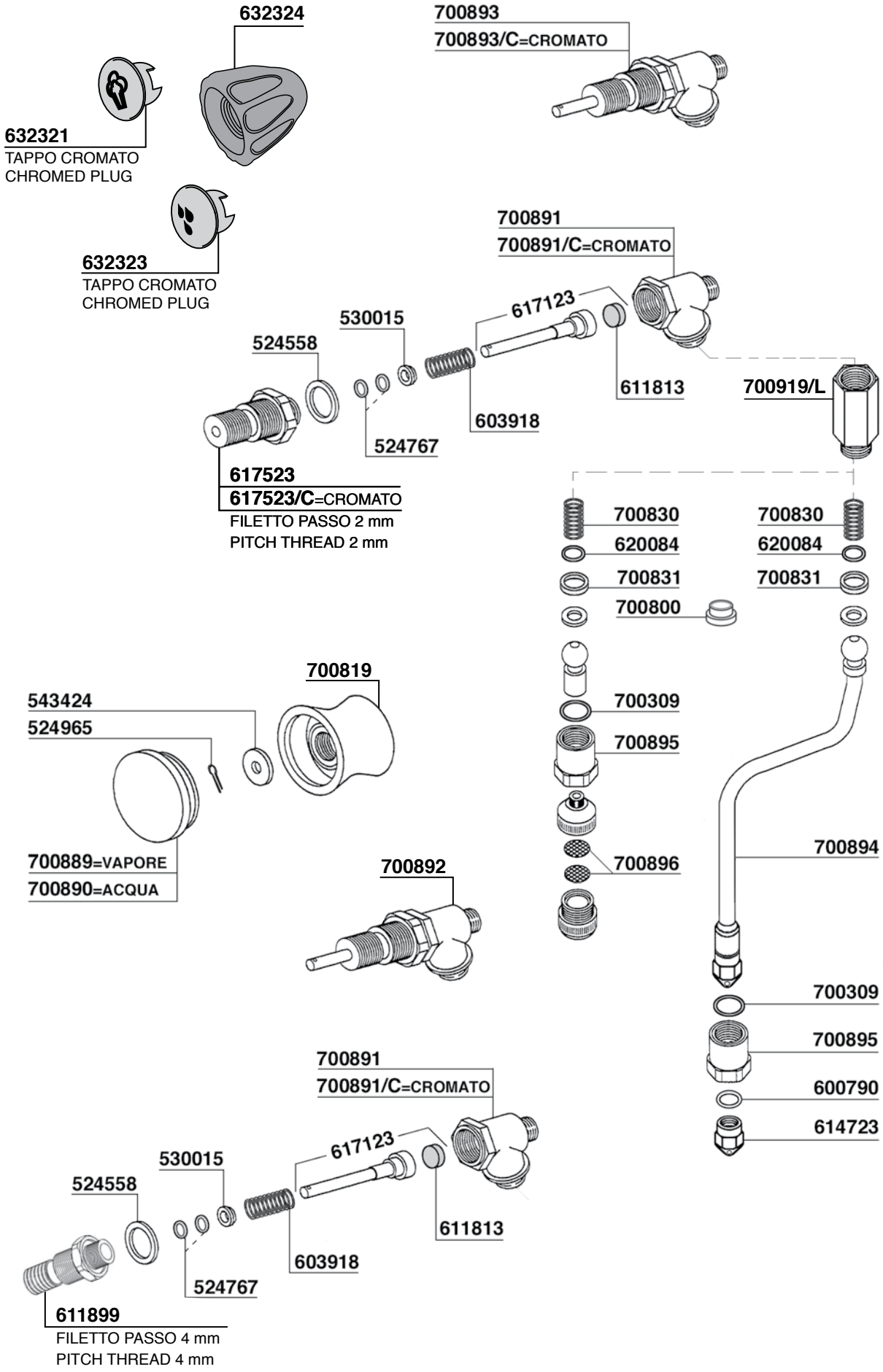
632324
700893
700893/C=CROMATO
632321
TAPPO CROMATO
CHROMED PLUG
632323
TAPPO CROMATO
CHROMED PLUG
700891
700891/C=CROMATO
617123
530015
524558
611813
700919/L
603918
524767
617523
617523/C=CROMATO
FILETTO PASSO 2 mm
PITCH THREAD 2 mm
700830
620084
700831
700800
700830
620084
700831
700819
543424
524965
700309
700895
700889=VAPORE
700890=ACQUA
700892
700896
700894
700309
700895
600790
614723
700891
700891/C=CROMATO
617123
530015
524558
611813
603918
524767
611899
FILETTO PASSO 4 mm
PITCH THREAD 4 mm

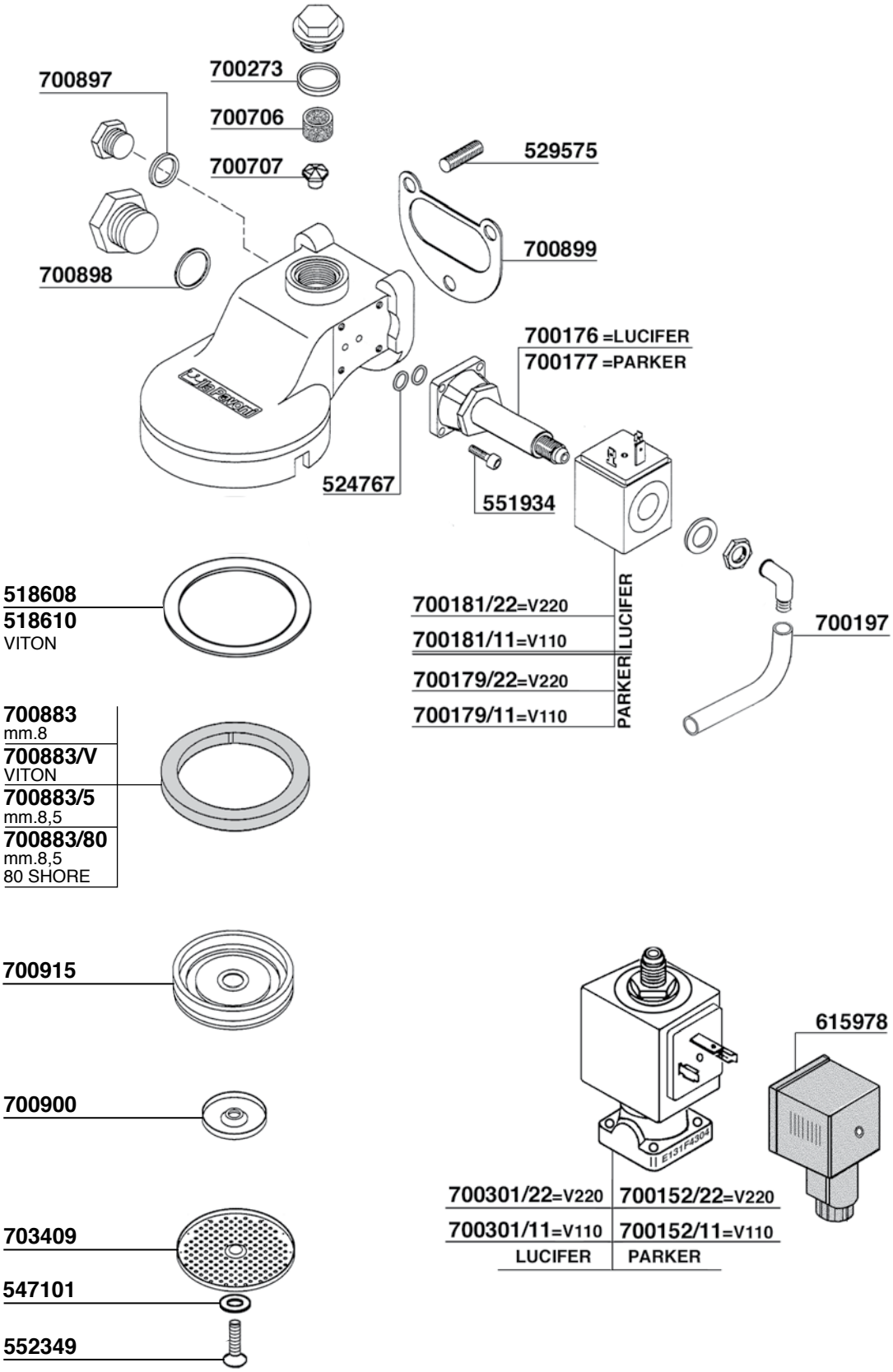
700897
700273
700706
700707
529575
700899
700898
700176 =LUCIFER
700177 =PARKER
524767
551934
518608
518610
VITON
700181/22=V220
700181/11=V110
700179/22=V220
700179/11=V110
PARKER
LUCIFER
700197
700883
mm.8
700883/V
VITON
700883/5
mm.8,5
700883/80
mm.8,5
80 SHORE
700915
615978
700900
703409
547101
552349
700301/22=V220
700301/11=V110
LUCIFER
700152/22=V220
700152/11=V110
PARKER

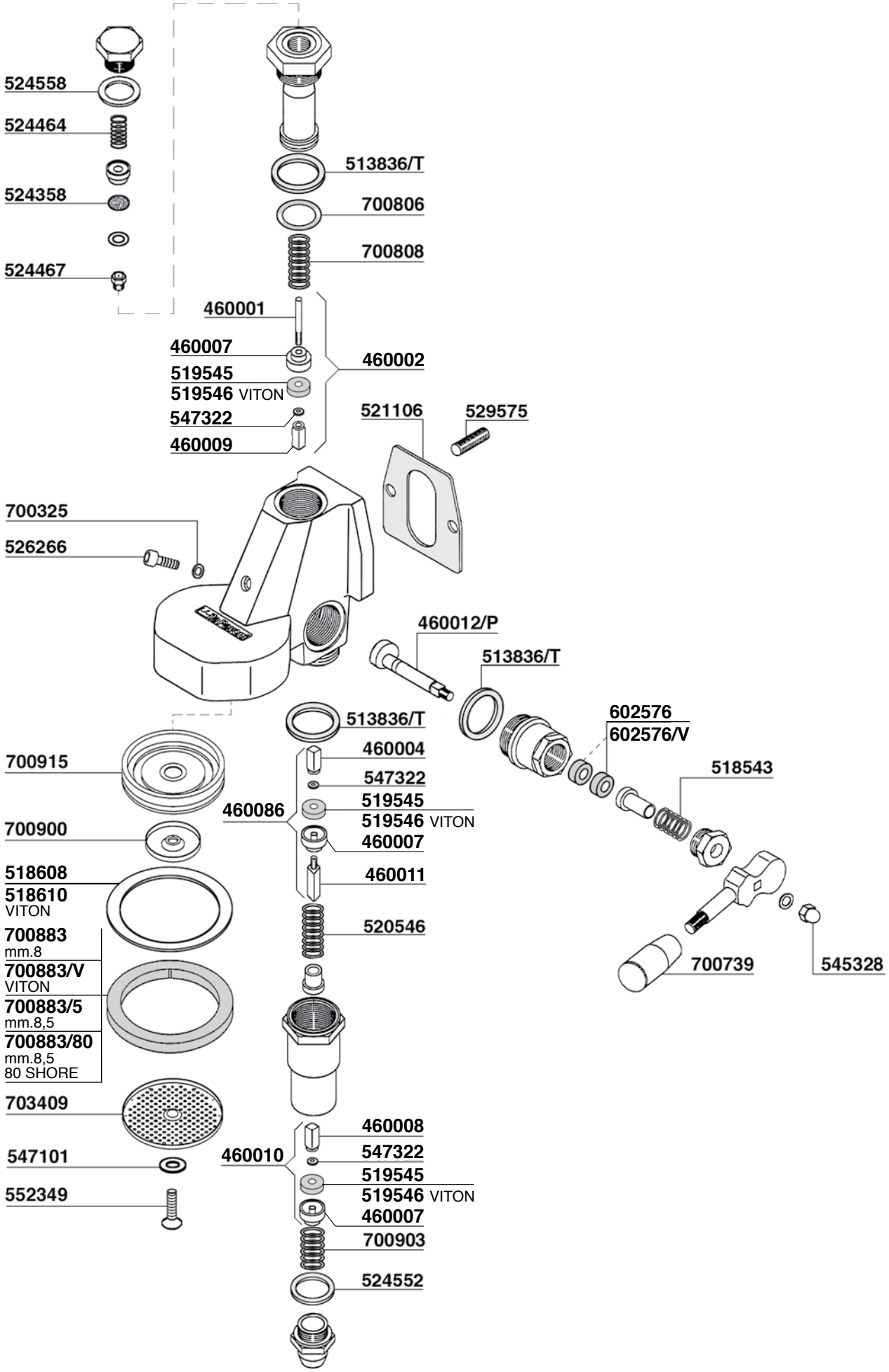
524558
524464
524358
524467
513836/T
700806
700808
460001
460007
519545
519546 VITON
547322
460009
460002
521106
529575
700325
526266
460012/P
513836/T
602576
602576/V
518543
513836/T
460004
547322
519545
519546 VITON
460007
460086
460011
520546
700915
700900
518608
518610
VITON
700883
mm.8
700883/V
VITON
700883/5
mm.8,5
700883/80
mm.8,5
80 SHORE
703409
547101
552349
700739
545328
460008
547322
519545
519546 VITON
460007
460010
700903
524552

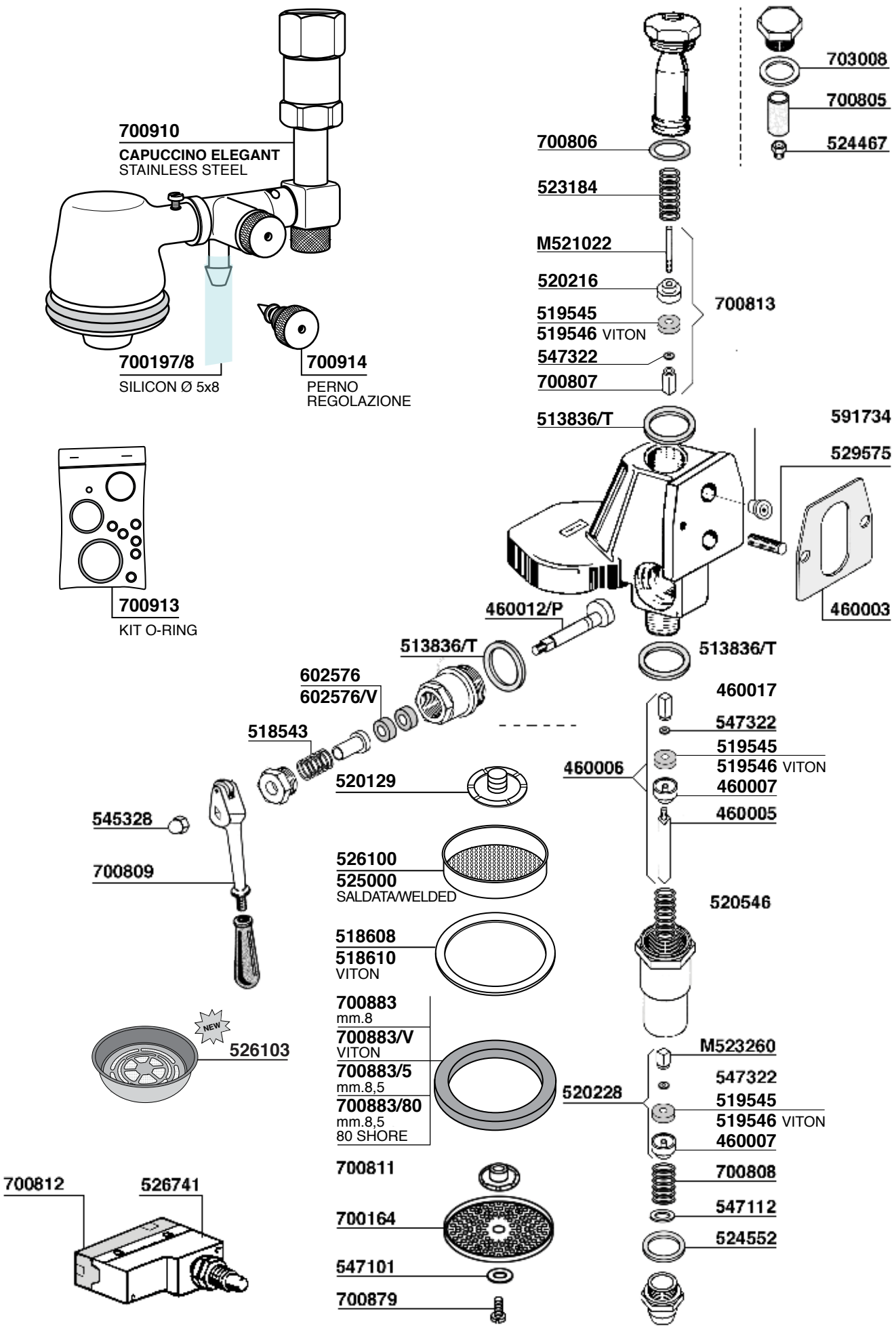
700910
CAPUCCINO ELEGANT
STAINLESS STEEL
700197/8
SILICON Ø 5x8
700914
PERNO
REGOLAZIONE
700913
KIT O-RING
703008
700805
524467
700806
523184
M521022
520216
519545
519546 VITON
547322
700807
700813
513836/T
591734
529575
460003
460012/P
513836/T
513836/T
602576
602576/V
518543
520129
460017
547322
519545
519546 VITON
460007
460005
460006
545328
700809
526100
525000
SALDATA/WELDED
520546
518608
518610
VITON
NEW
526103
700883
mm.8
700883/V
VITON
700883/5
mm.8,5
700883/80
mm.8,5
80 SHORE
M523260
547322
519545
519546 VITON
460007
520228
700812
526741
700811
700164
547101
700879
700808
547112
524552

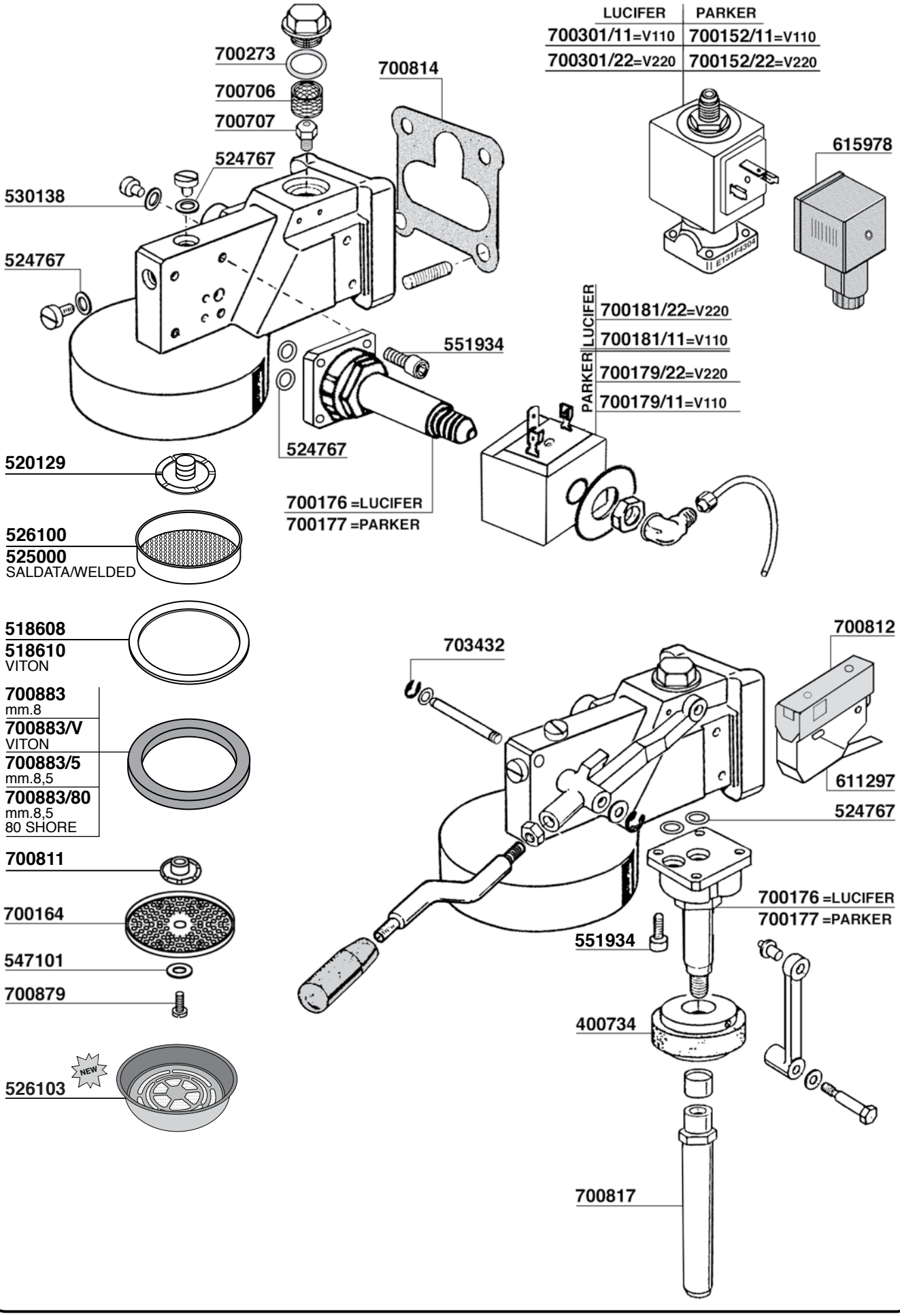
LUCIFER
PARKER
700301/11=V110
700152/11=V110
700301/22=V220
700152/22=V220
700273
700706
700707
700814
524767
530138
524767
615978
E131F4304
551934
524767
700181/22=V220
700181/11=V110
700179/22=V220
700179/11=V110
LUCIFER
PARKER
520129
700176 =LUCIFER
700177 =PARKER
526100
525000
SALDATA/WELDED
518608
518610
VITON
700883
mm.8
700883/V
VITON
700883/5
mm.8,5
700883/80
mm.8,5
80 SHORE
700811
700164
547101
700879
526103
NEW
703432
700812
611297
524767
700176 =LUCIFER
700177 =PARKER
551934
400734
700817

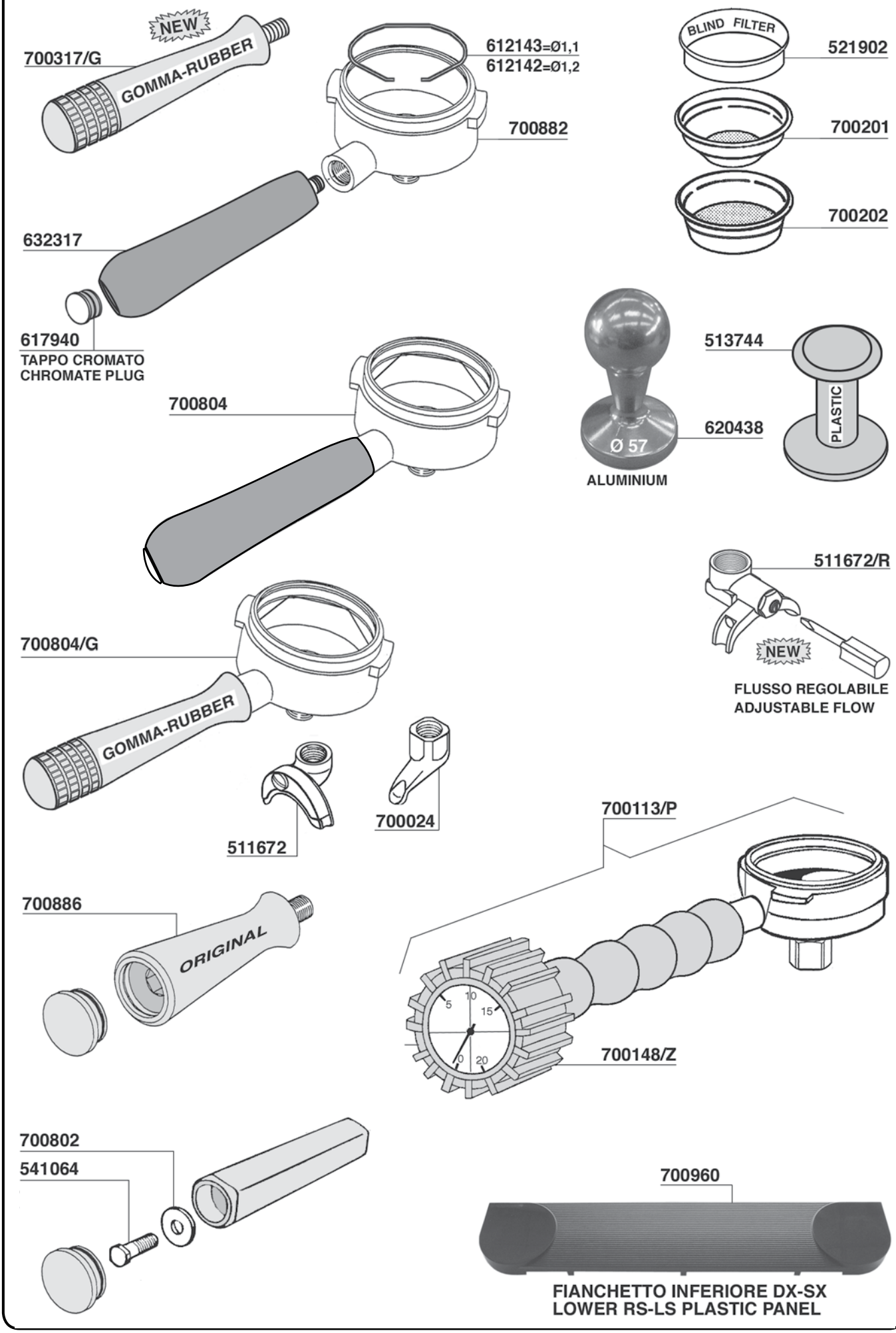
NEW
700317/G
GOMMA-RUBBER
612143=Ø1,1
612142=Ø1,2
700882
BLIND FILTER
521902
700201
700202
632317
617940
TAPPO CROMATO
CHROMATE PLUG
700804
513744
PLASTIC
620438
Ø 57
ALUMINIUM
511672/R
NEW
FLUSSO REGOLABILE
ADJUSTABLE FLOW
700804/G
GOMMA-RUBBER
511672
700024
700113/P
700886
ORIGINAL
700148/Z
700802
541064
700960
FIANCHETTO INFERIORE DX-SX
LOWER RS-LS PLASTIC PANEL

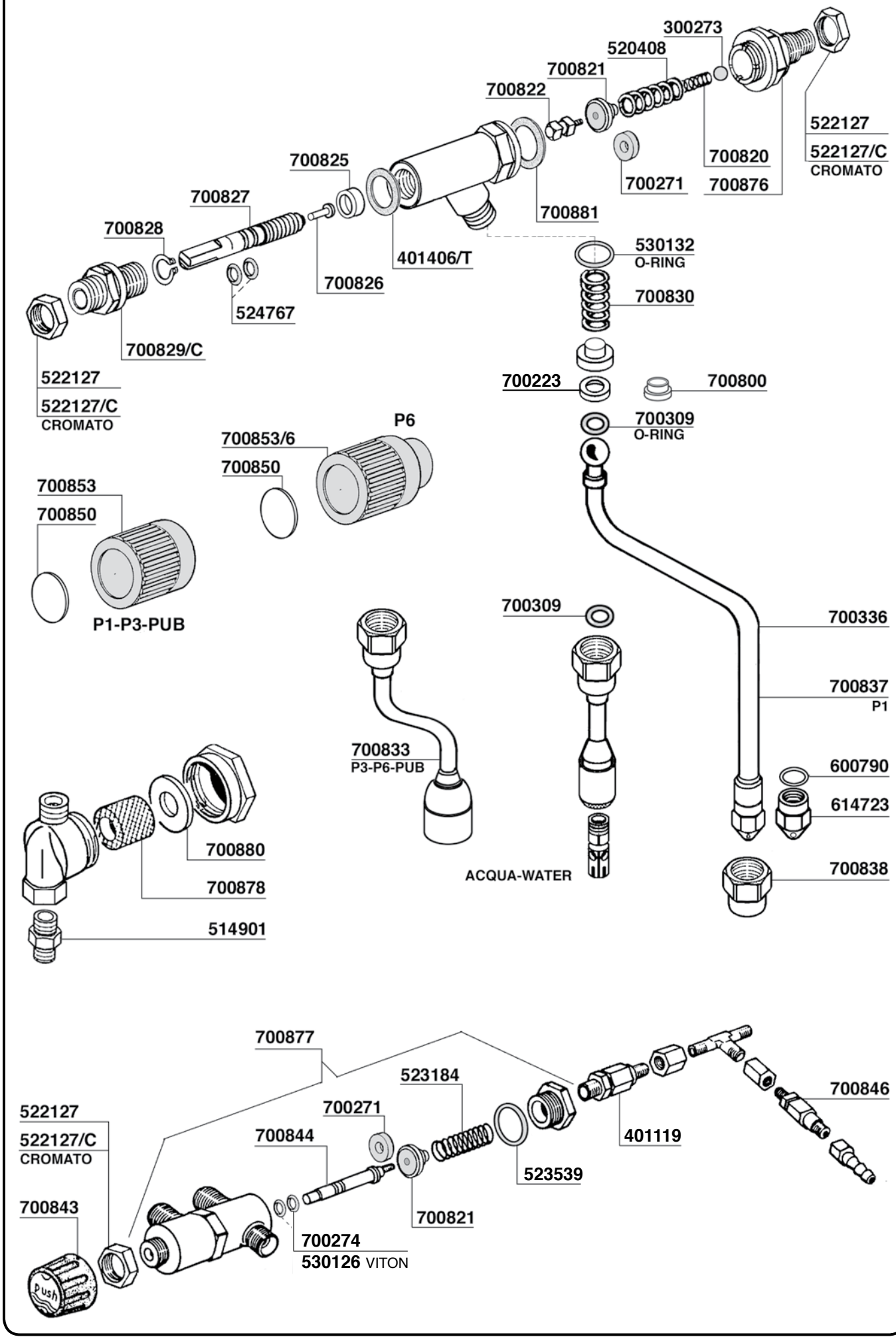
300273
520408
700821
700822
522127
522127/C
CROMATO
700820
700876
700271
700825
700827
700828
700881
530132
O-RING
401406/T
700826
700830
524767
700829/C
522127
522127/C
CROMATO
700223
700800
700309
O-RING
P6
700853/6
700850
700853
700850
P1-P3-PUB
700309
700336
700837
P1
700833
P3-P6-PUB
600790
614723
700880
700878
ACQUA-WATER
700838
514901
700877
523184
700846
522127
522127/C
CROMATO
700271
700844
401119
523539
700843
700821
700274
530126 VITON
Push

700856

700907

Ø184x170mm

400826/T

700858/22=W1500 V220 mm.140

700858/11=W1500 V110 mm.140

700860/22=GR/2 W1300 V220

700863

700874

700861=GR/1/2 W3000 V220/380

700861/11=GR/1/2 W2000 V110

700862=GR/2/3 W4000 V220/380

700862/11=GR/2/3 W3000 V110

700863

700875

400826/T

700887 = 4500W 230/400V mm.290

700888 = GR2 3000W 230 mm.230

700884

615623

1/4

615624/A

certificato
certified

3/8

524555

700869/22=V220

700869/11=V110

PARKER

1/8

1/8

615978

ACQUA CALDA

701801

M12x1

701804

700857

M22

700898

551937

530143

617903/G

615978/T

615979

620404

GICAR

700253/22=V220

700253/11=V110

615978/P

AUTOLIVELLO

612601 120mm

524554

700737 =V220

700737/11=V110

GICAR

RL 30/1 E-2CF

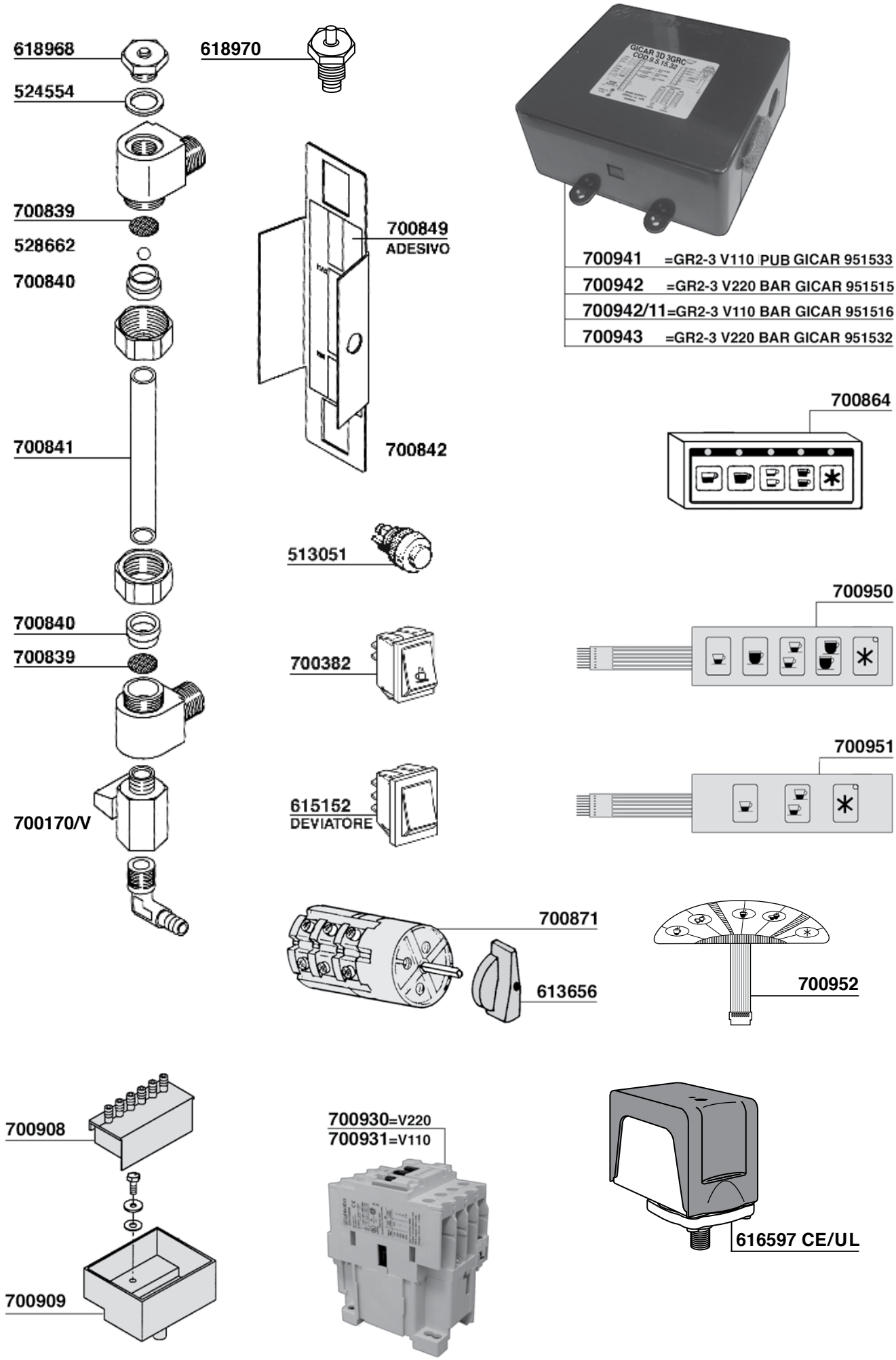
618968
524554
618970
700839
528662
700840
700841
700840
700839
700170/V
700849
ADESIVO
700842
513051
700382
615152
DEVIATORE
700871
613656
GICAR 3D 3GRC
700941 =GR2-3 V110 PUB GICAR 951533
700942 =GR2-3 V220 BAR GICAR 951515
700942/11=GR2-3 V110 BAR GICAR 951516
700943 =GR2-3 V220 BAR GICAR 951532
700864
700950
700951
700952
700908
700909
700930=V220
700931=V110
616597 CE/UL

PAVONI

EUROPICCOLA - PROFESSIONAL

MODELLO CROMATO - CHROMED MODEL

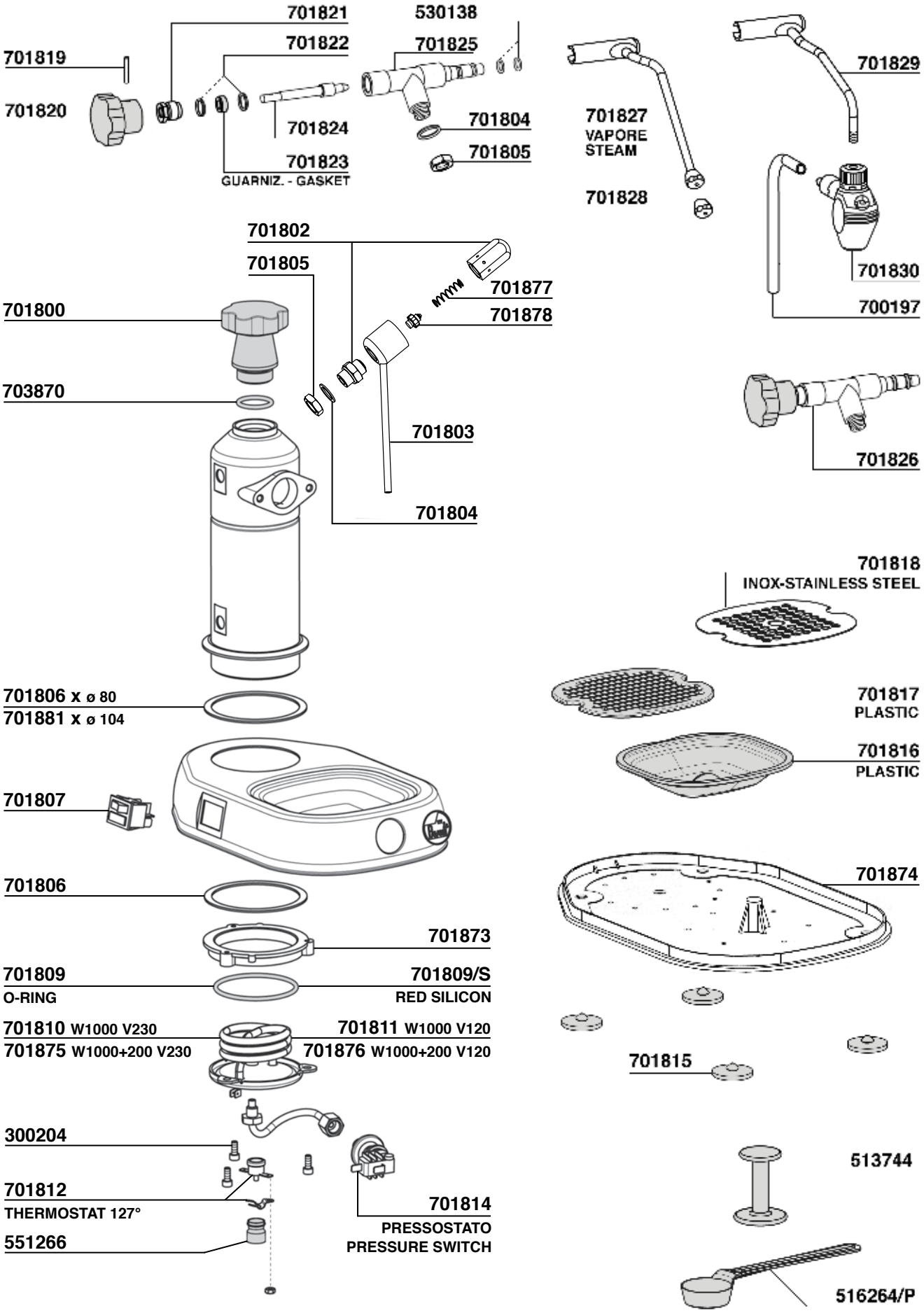

EUROPICCOLA - PROFESSIONAL

MODELLO CROMATO - CHROMED MODEL

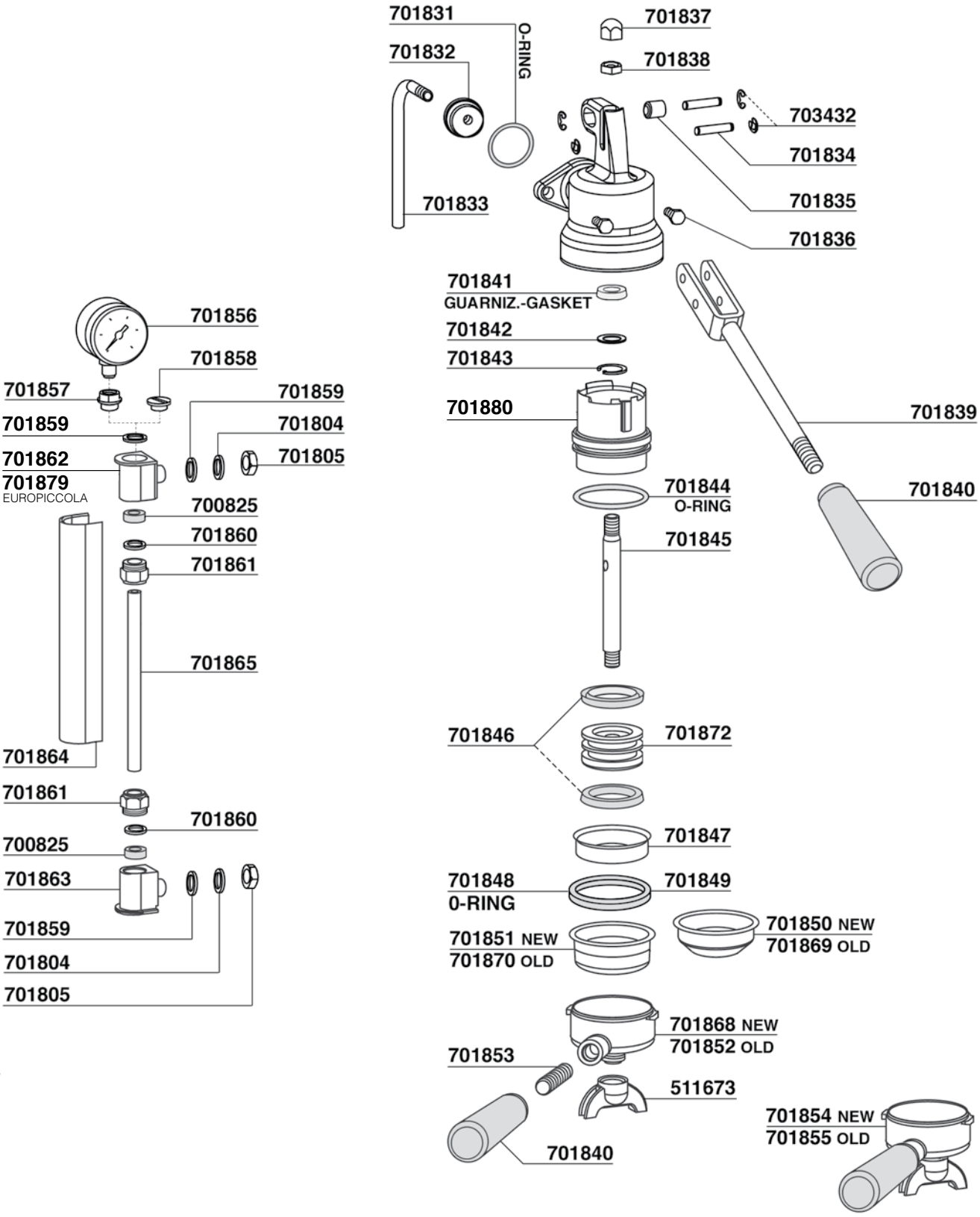

KIT COMPLETO GUARIZIONI EUROPICCOLA
EUROPICCOLA GASKET COMPLETE KIT — **COD. 701866**

KIT COMPLETO GUARNIZIONI PROFESSIONAL
PROFESSIONAL GASKET COMPLETE KIT — **COD.701867**

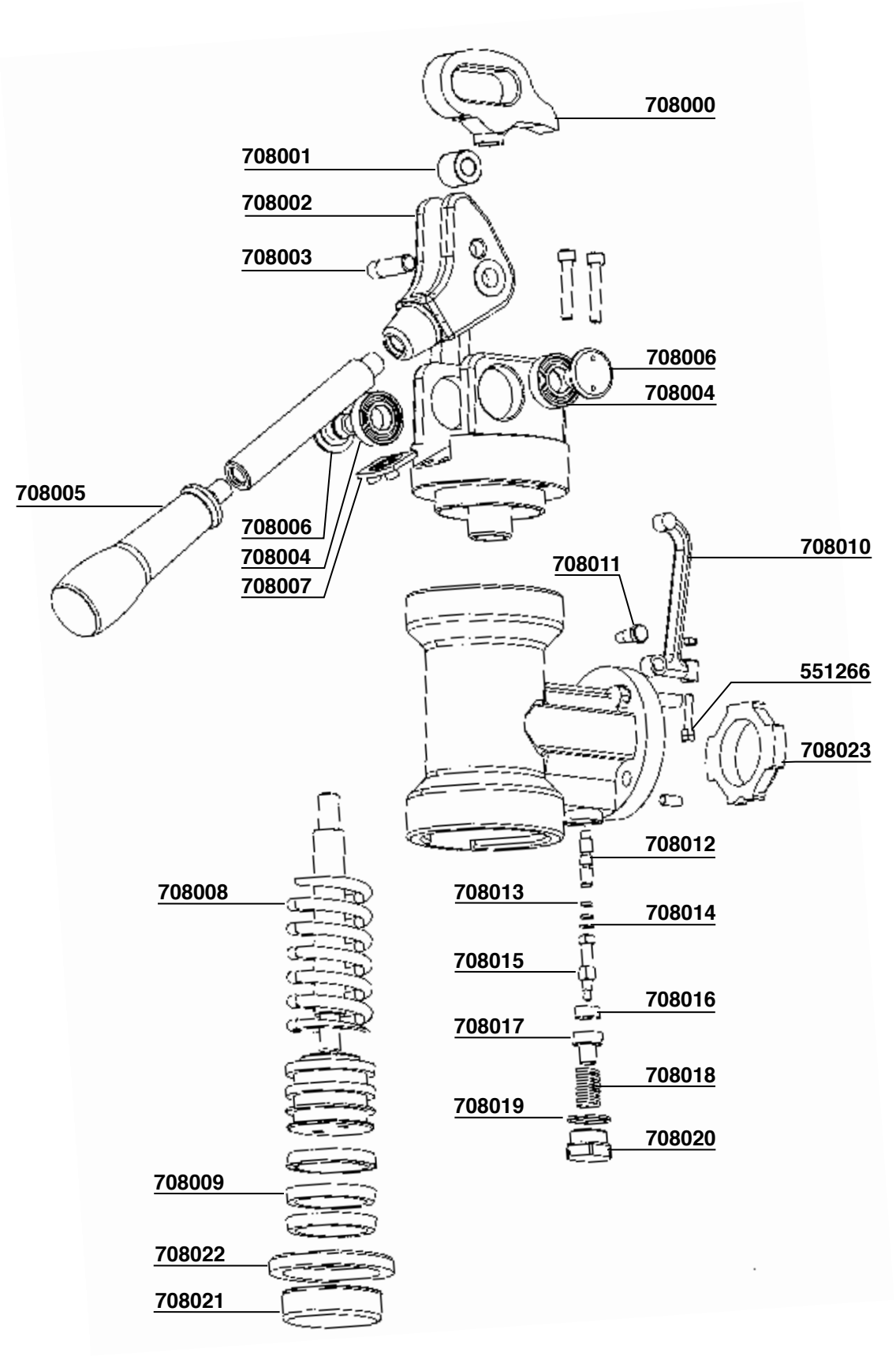
708000
708001
708002
708003
708006
708004
708005
708006
708004
708007
708010
708011
551266
708023
708012
708008
708013
708014
708015
708016
708017
708018
708019
708020
708009
708022
708021

PROMAC

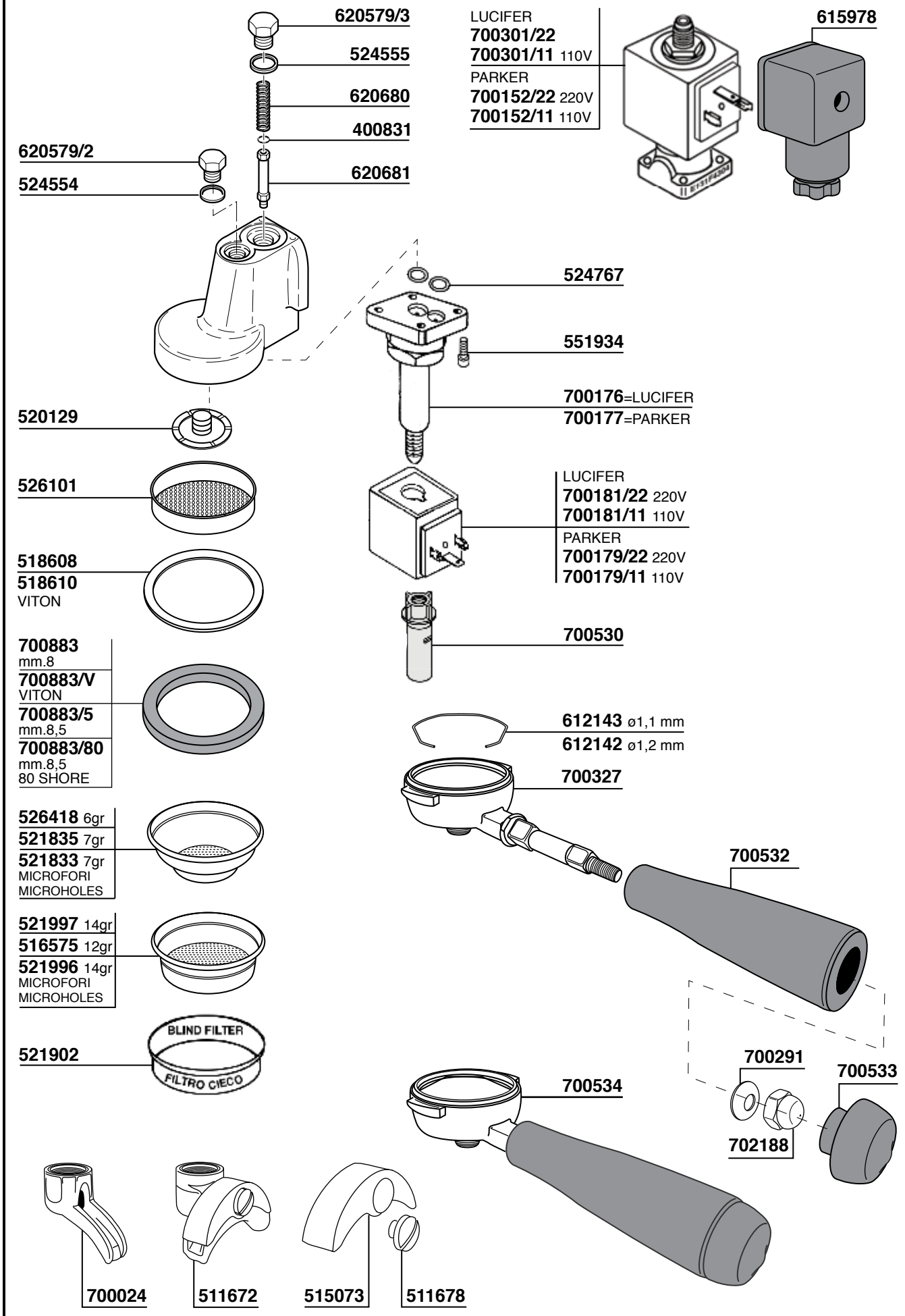
620579/3
524555
620680
400831
620681
620579/2
524554
LUCIFER
700301/22
700301/11 110V
PARKER
700152/22 220V
700152/11 110V
615978
524767
551934
700176=LUCIFER
700177=PARKER
520129
526101
LUCIFER
700181/22 220V
700181/11 110V
PARKER
700179/22 220V
700179/11 110V
518608
518610
VITON
700530
700883
mm.8
700883/V
VITON
700883/5
mm.8,5
700883/80
mm.8,5
80 SHORE
612143 ø1,1 mm
612142 ø1,2 mm
700327
526418 6gr
521835 7gr
521833 7gr
MICROFORI
MICROHOLES
700532
521997 14gr
516575 12gr
521996 14gr
MICROFORI
MICROHOLES
BLIND FILTER
FILTRO CIECO
521902
700291
700533
700534
702188
700024
511672
515073
511678

PROMAC

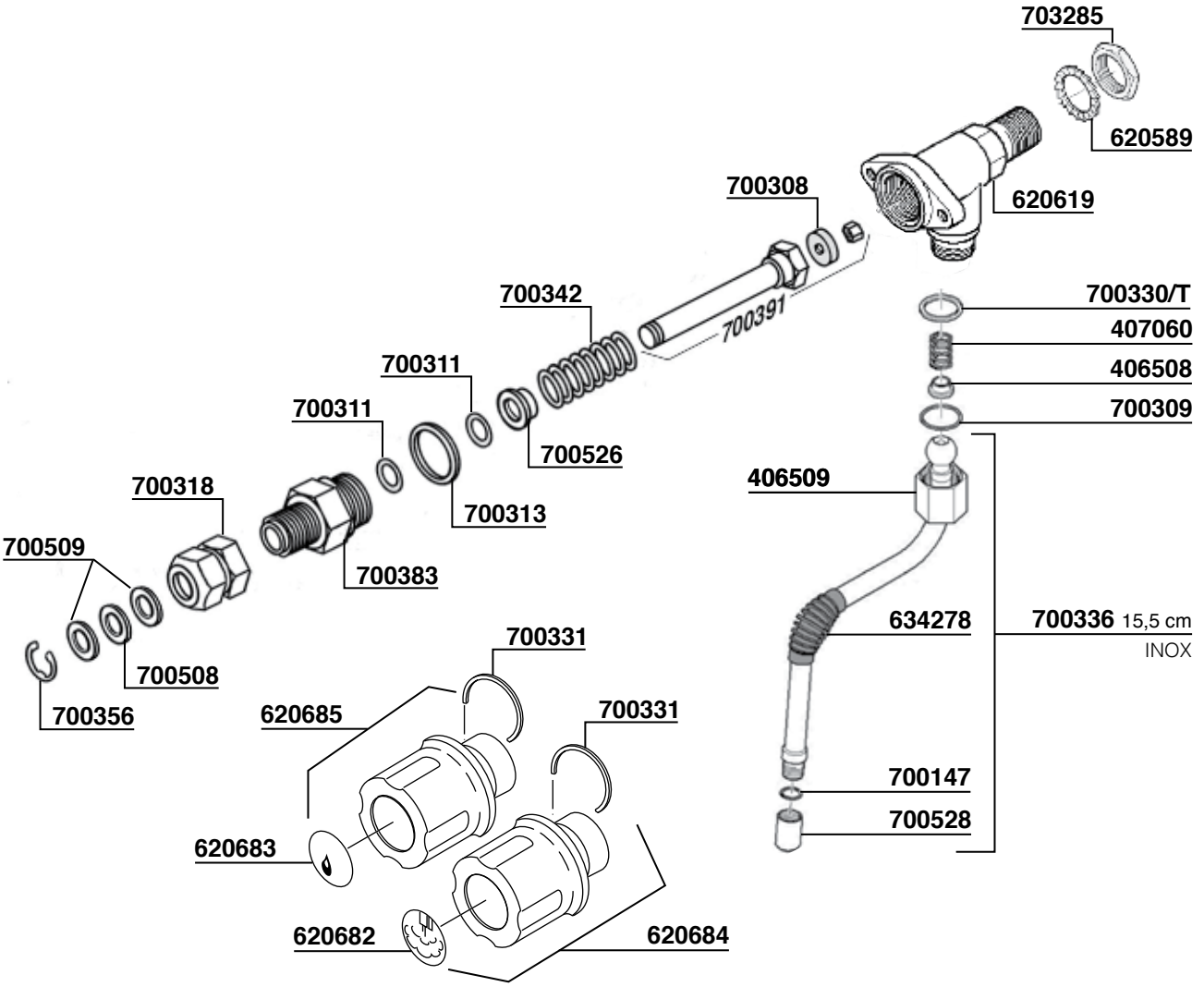
703285
620589
620619
700308
700391
700342
700330/T
407060
406508
700309
700311
700311
700526
700313
406509
700318
700383
700509
634278
700336 15,5 cm
INOX
700508
700356
700331
620685
700331
700147
700528
620683
620682
620684

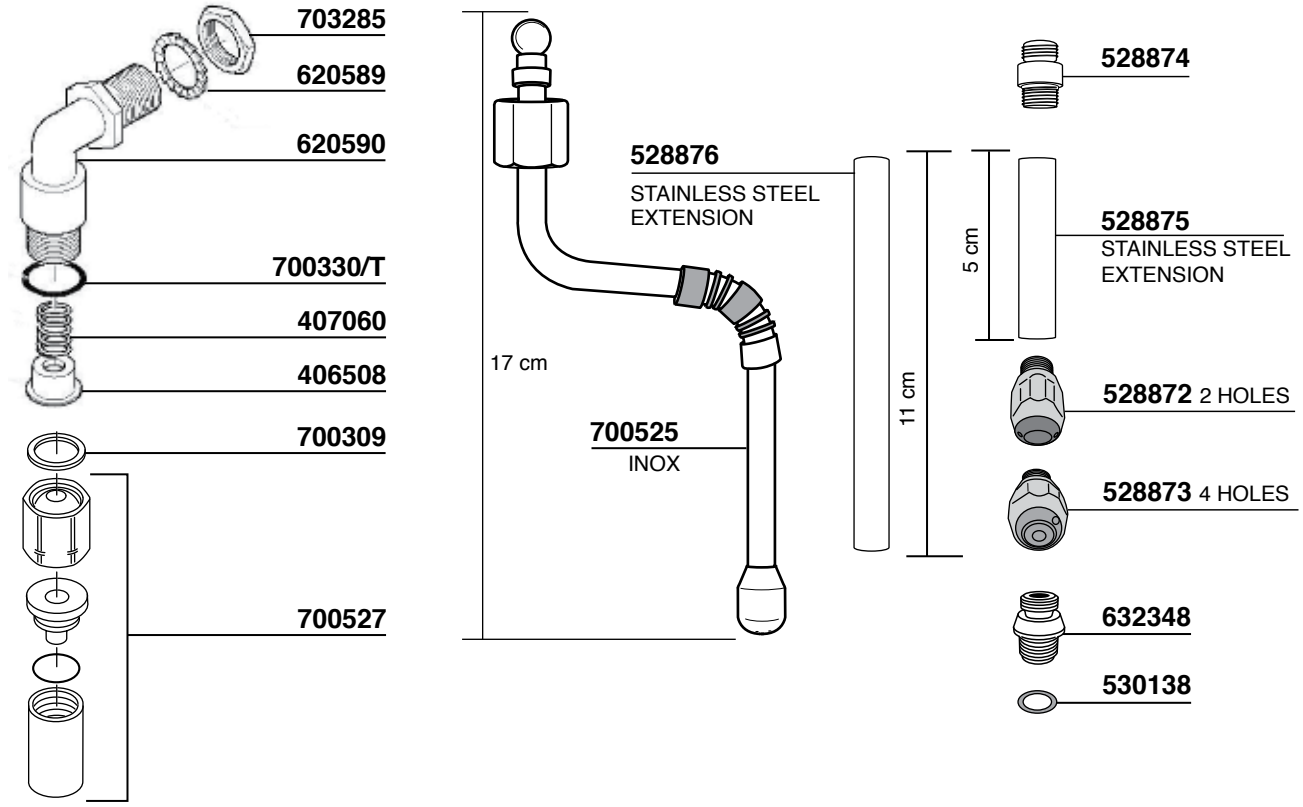
703285
620589
620590
700330/T
407060
406508
700309
700527
528876
STAINLESS STEEL
EXTENSION
17 cm
700525
INOX
528874
5 cm
528875
STAINLESS STEEL
EXTENSION
11 cm
528872 2 HOLES
528873 4 HOLES
632348
530138
633433=3 HOLES
FEMALE
633433/4=4 HOLES
FEMALE

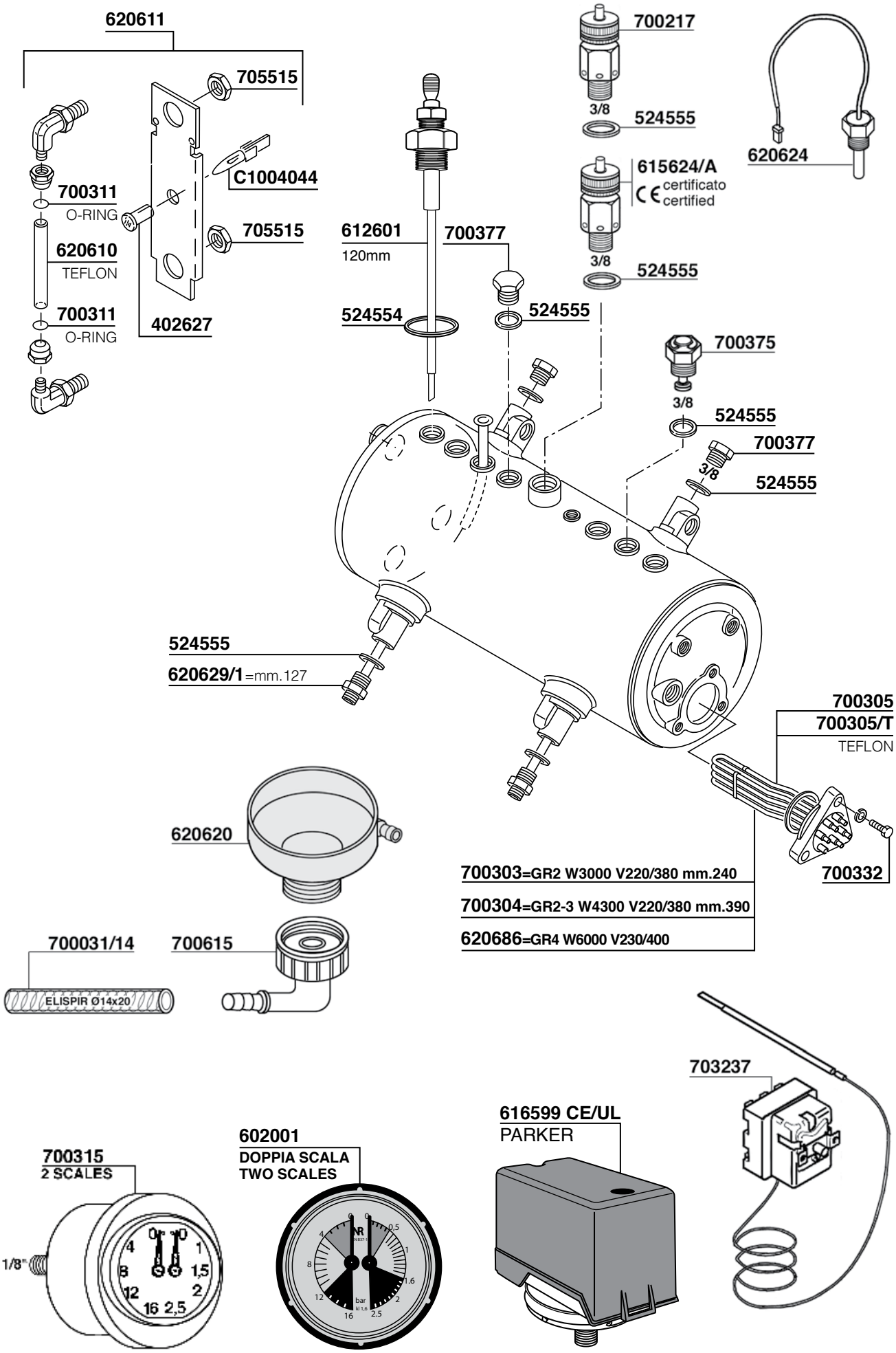
620611
705515
C1004044
705515
700311
O-RING
620610
TEFLON
700311
O-RING
402627
612601
120mm
700377
524554
524555
700217
3/8
524555
615624/A
certificato
certified
3/8
524555
620624
700375
3/8
524555
700377
3/8
524555
524555
620629/1=mm.127
700305
700305/T
TEFLON
700332
620620
700303=GR2 W3000 V220/380 mm.240
700304=GR2-3 W4300 V220/380 mm.390
620686=GR4 W6000 V230/400
700031/14
ELISPIR Ø14x20
700615
703237
616599 CE/UL
PARKER
602001
DOPPIA SCALA
TWO SCALES
700315
2 SCALES
1/8"

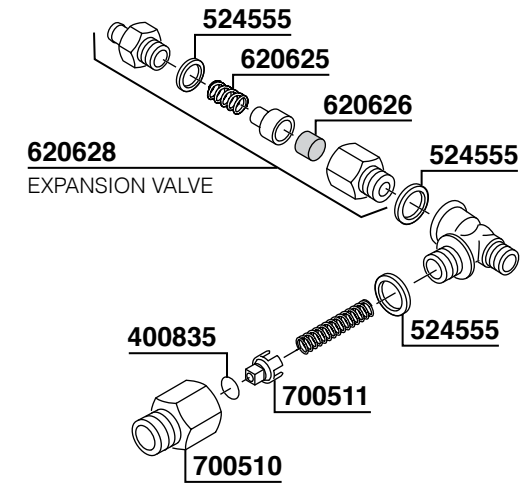
524555
620625
620626
620628
EXPANSION VALVE
524555
524555
400835
700511
700510

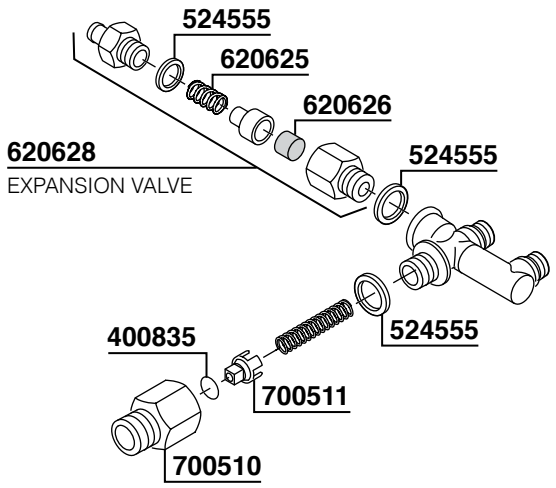
524555
620625
620626
620628
EXPANSION VALVE
524555
524555
400835
700511
700510

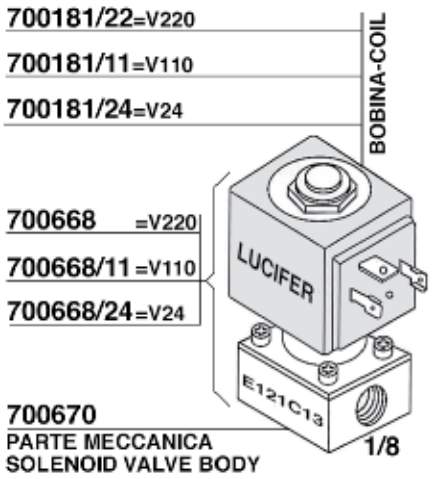
700181/22=V220
700181/11=V110
700181/24=V24
BOBINA-COIL
700668 =V220
700668/11 =V110
700668/24=V24
LUCIFER
E121C13
700670
PARTE MECCANICA
SOLENOID VALVE BODY
1/8

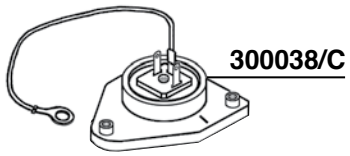
300038/C

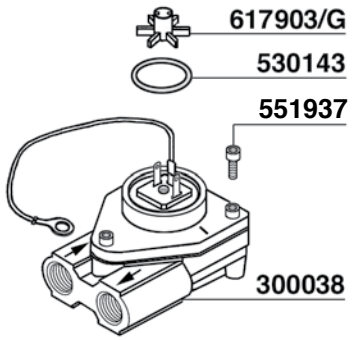
617903/G
530143
551937
300038

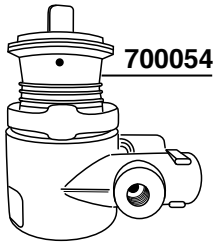
700054

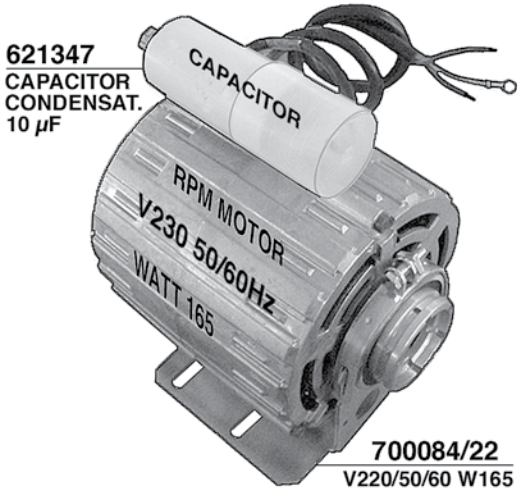
621347
CAPACITOR
CONDENSAT.
10 μF
CAPACITOR
RPM MOTOR
V230 50/60Hz
WATT 165
700084/22
V220/50/60 W165

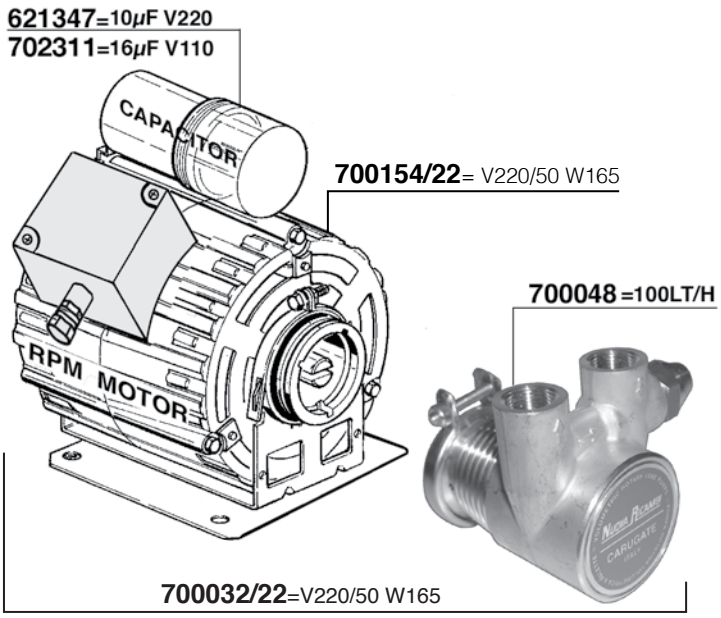
621347=10μF V220
702311=16μF V110
CAPACITOR
700154/22= V220/50 W165
700048 =100LT/H
RPM MOTOR
700032/22=V220/50 W165

700042

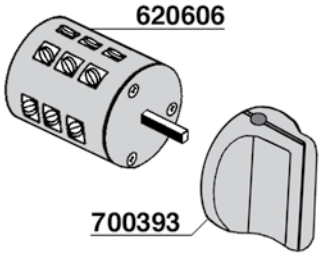

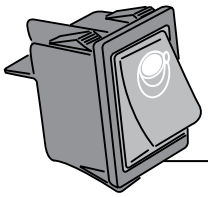

620687

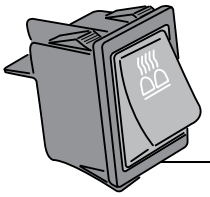

620688

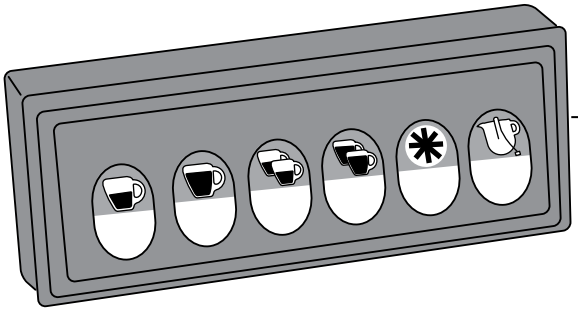

620689
GICAR CODE 9.9.08.91.G

620690
GICAR CODE 9.5.13.59.G

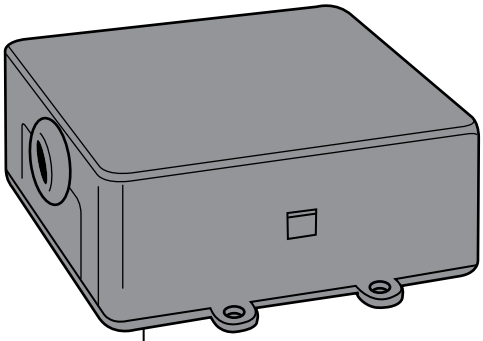

620691 GR1/2/3 230V
GICAR CODE 9.5.25.49.G

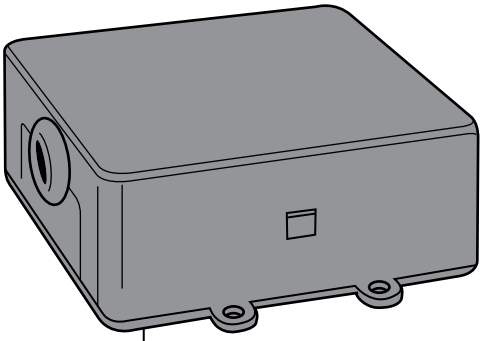

620693 GR2/3 230V PROMAC PLUS
GICAR CODE 9.5.25.29.G

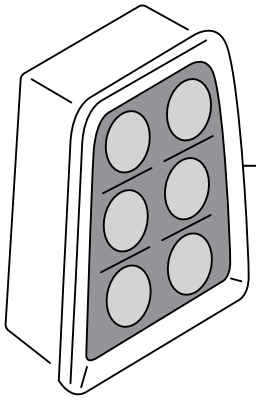

620694
GICAR CODE 9.9.18.36.G

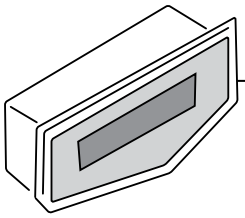

620695
GICAR CODE 9.5.31.67.G

RANCILIO

Tav. 01

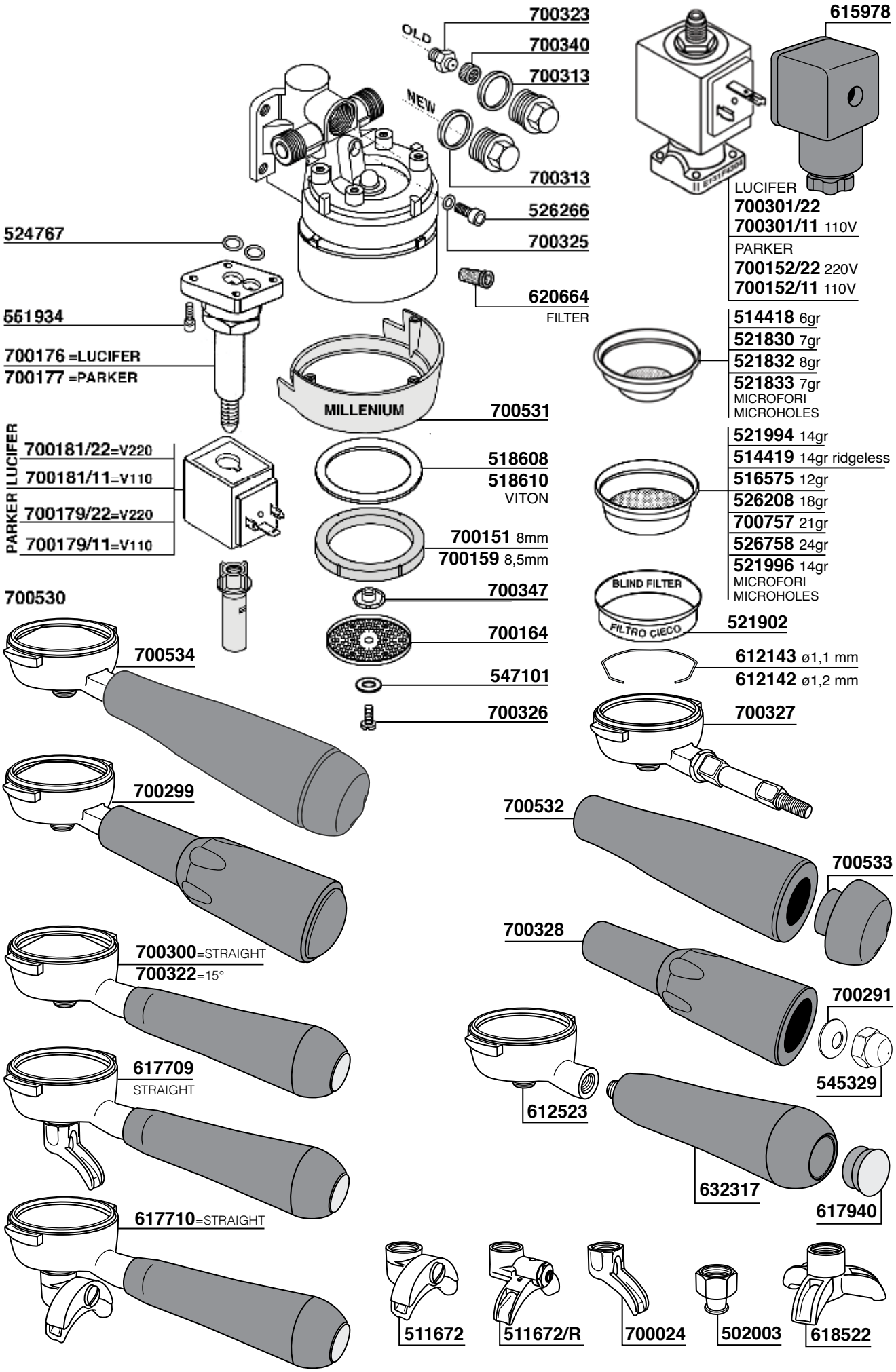

RANCILIO

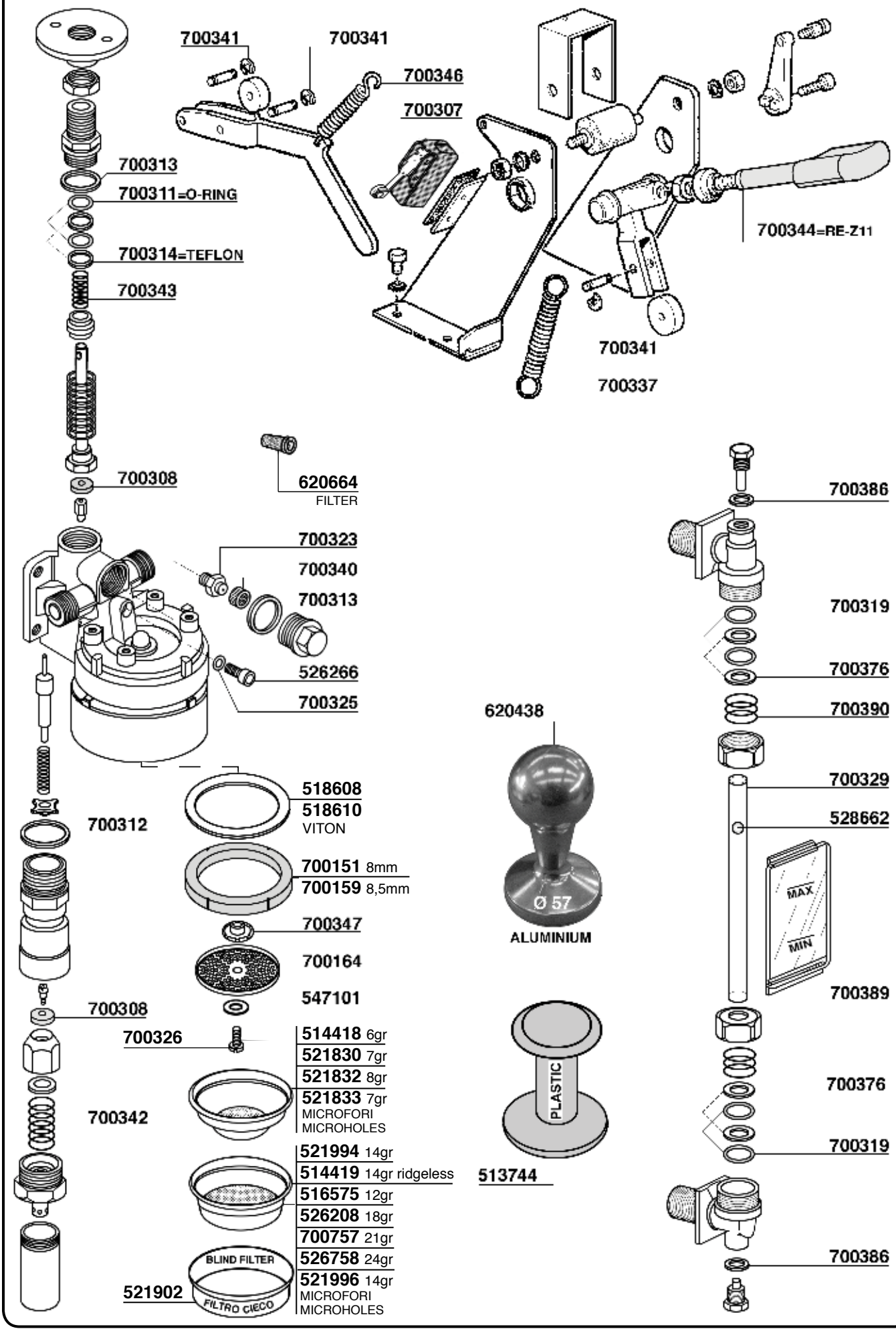
700341
700341
700346
700307
700313
700311=O-RING
700314=TEFLON
700343
700344=RE-Z11
700341
700337
700308
620664
FILTER
700323
700340
700313
526266
700325
700312
518608
518610
VITON
700151 8mm
700159 8,5mm
700347
700164
547101
700308
700326
514418 6gr
521830 7gr
521832 8gr
521833 7gr
MICROFORI
MICROHOLES
700342
521994 14gr
514419 14gr ridgeless
516575 12gr
526208 18gr
700757 21gr
526758 24gr
521996 14gr
MICROFORI
MICROHOLES
BLIND FILTER
FILTRO CIECO
521902
620438
Ø 57
ALUMINIUM
PLASTIC
513744
700386
700319
700376
700390
700329
528662
MAX
MIN
700389
700376
700319
700386

RANCILIO

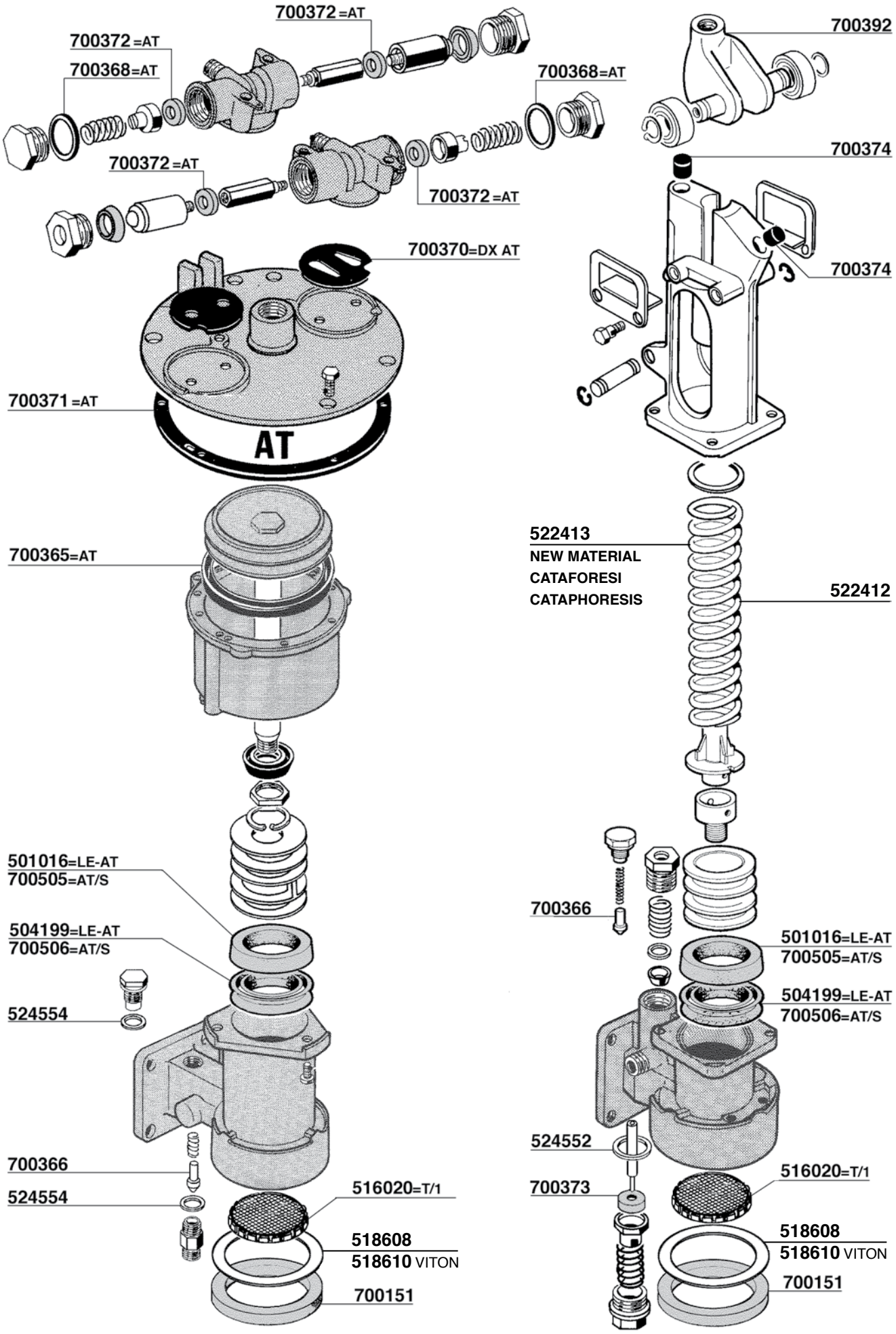
700372 =AT
700372 =AT
700368=AT
700368=AT
700392
700372 =AT
700372 =AT
700374
700370=DX AT
700374
700371 =AT
AT
522413
NEW MATERIAL
CATAFORESI
CATAPHORESIS
522412
700365=AT
501016=LE-AT
700505=AT/S
700366
504199=LE-AT
700506=AT/S
501016=LE-AT
700505=AT/S
504199=LE-AT
700506=AT/S
524554
524552
700366
516020=T/1
700373
524554
516020=T/1
518608
518610 VITON
518608
518610 VITON
700151
700151

RANCILIO

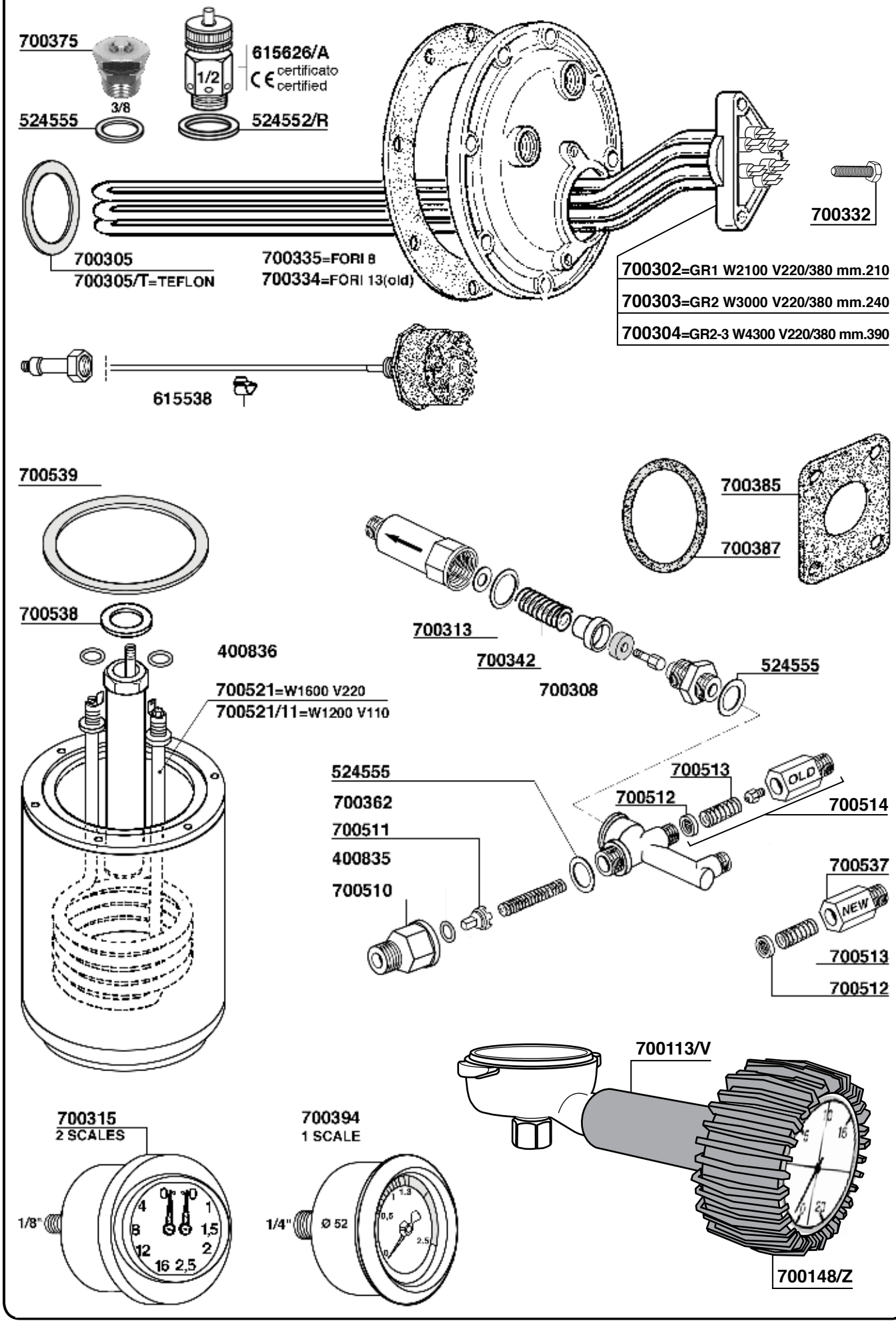
700375
3/8
524555
1/2
615626/A
CE certificato certified
524552/R
700305
700305/T=TEFLON
700335=FORI 8
700334=FORI 13(old)
700302=GR1 W2100 V220/380 mm.210
700303=GR2 W3000 V220/380 mm.240
700304=GR2-3 W4300 V220/380 mm.390
700332
615538
700539
700538
400836
700521=W1600 V220
700521/11=W1200 V110
700385
700387
700313
700342
700308
524555
524555
700362
700511
400835
700510
700513
700512
OLD
700514
700537
NEW
700513
700512
700113/V
700315
2 SCALES
1/8"
700394
1 SCALE
1/4"
Ø 52
700148/Z

RANCILIO

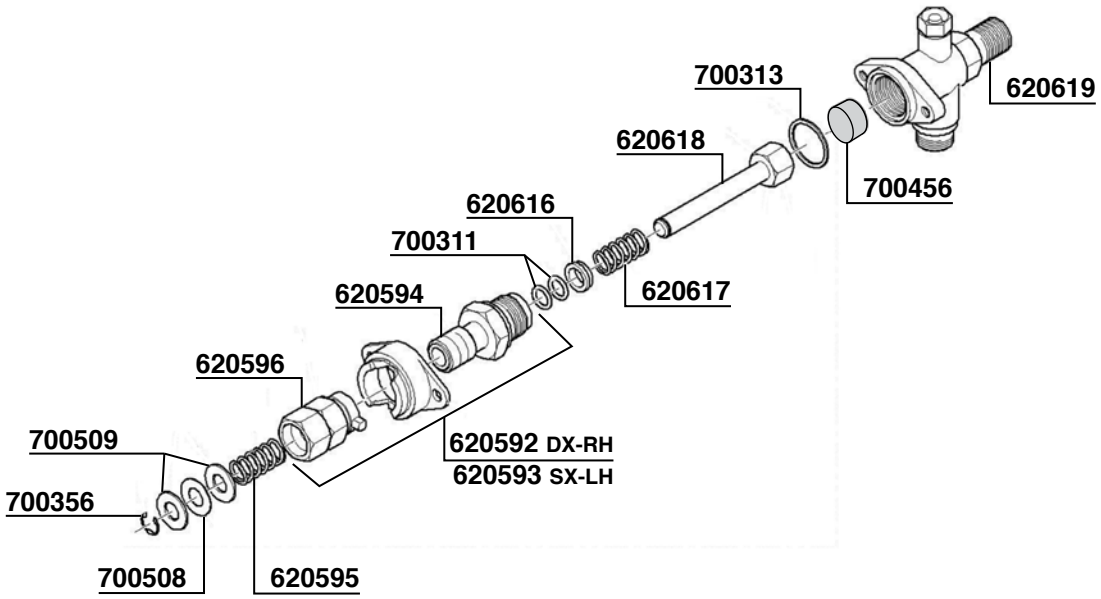
700313
620619
620618
700456
620616
700311
620617
620594
620596
620592 DX-RH
620593 SX-LH
700509
700356
700508
620595

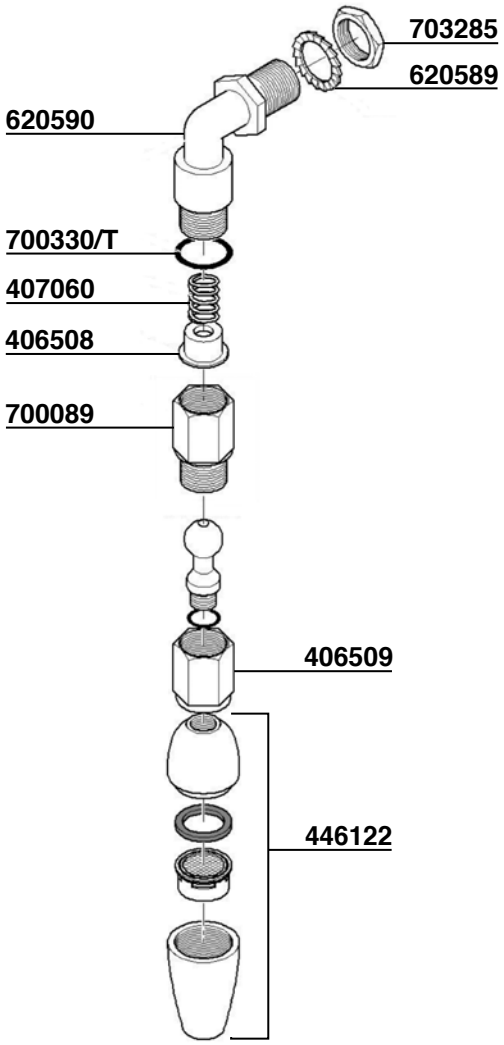
703285
620589
620590
700330/T
407060
406508
700089
406509
446122

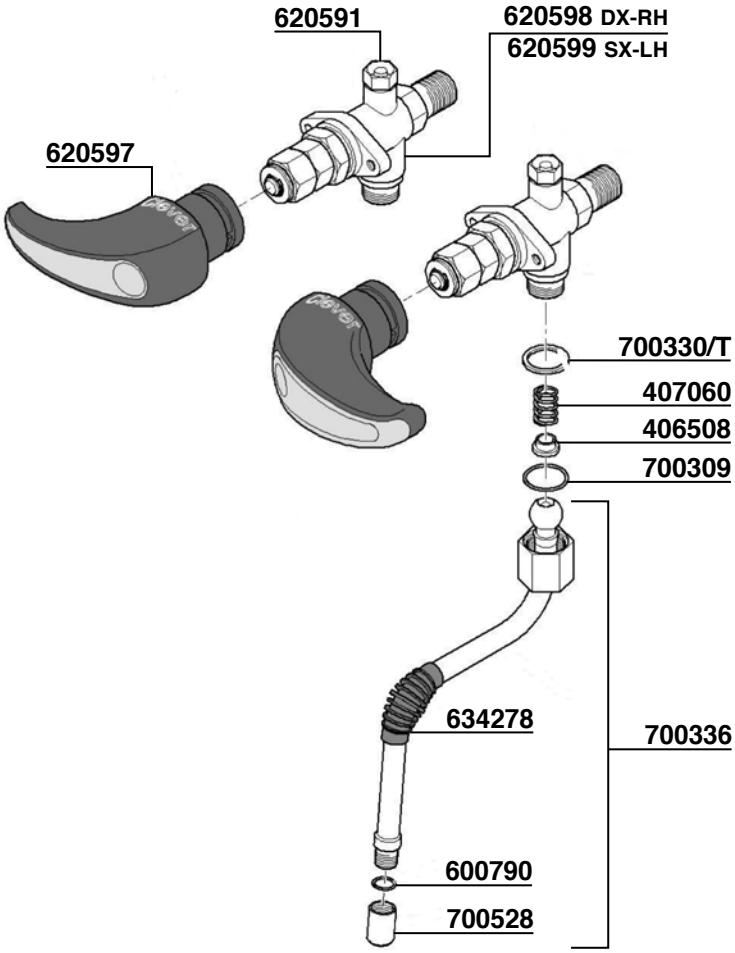
620591
620598 DX-RH
620599 SX-LH
620597
700330/T
407060
406508
700309
634278
700336
600790
700528

RANCILIO

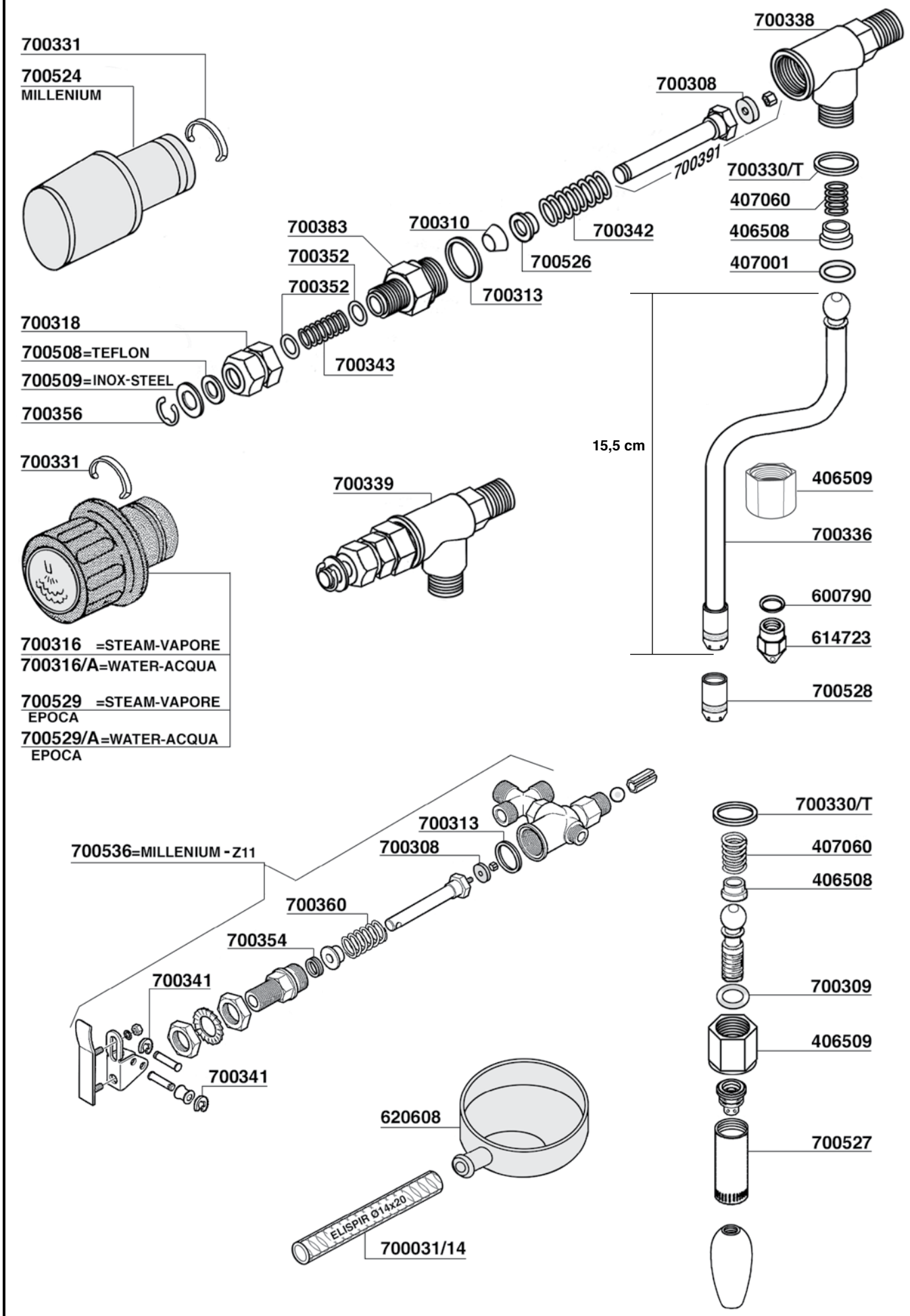
700331
700524
MILLENIUM
700338
700308
700391
700330/T
407060
406508
407001
700383
700310
700342
700352
700526
700352
700313
700318
700508=TEFLON
700509=INOX-STEEL
700343
700356
15,5 cm
700331
700339
406509
700336
600790
614723
700316 =STEAM-VAPORE
700316/A=WATER-ACQUA
700529 =STEAM-VAPORE
EPOCA
700529/A=WATER-ACQUA
EPOCA
700528
700313
700330/T
700536=MILLENIUM - Z11
700308
407060
406508
700360
700354
700341
700309
406509
700341
620608
700527
ELISPIR Ø14x20
700031/14

RANCILIO

CLASSE 10

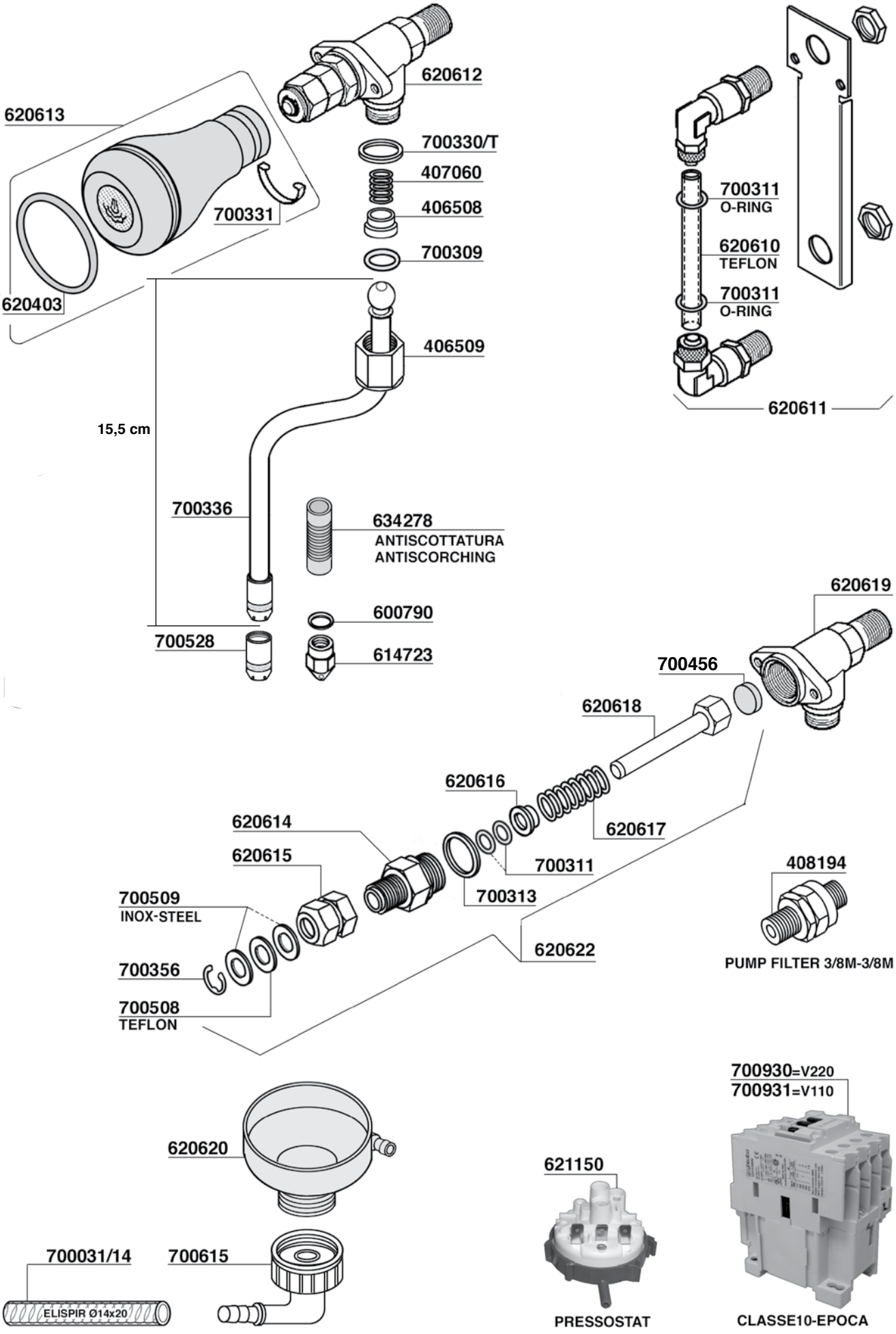

RANCILIO

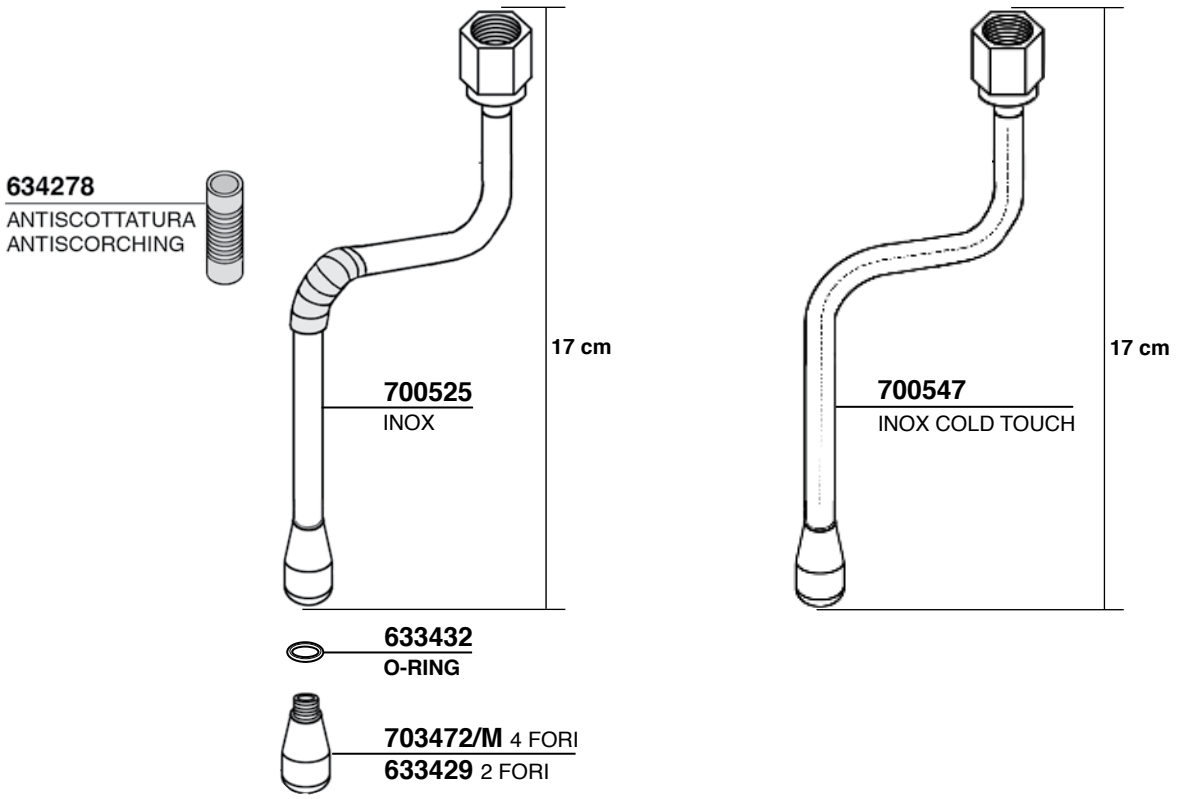
634278
ANTISCOTTATURA
ANTISCORCHING
17 cm
700525
INOX
17 cm
700547
INOX COLD TOUCH
633432
O-RING
703472/M 4 FORI
633429 2 FORI

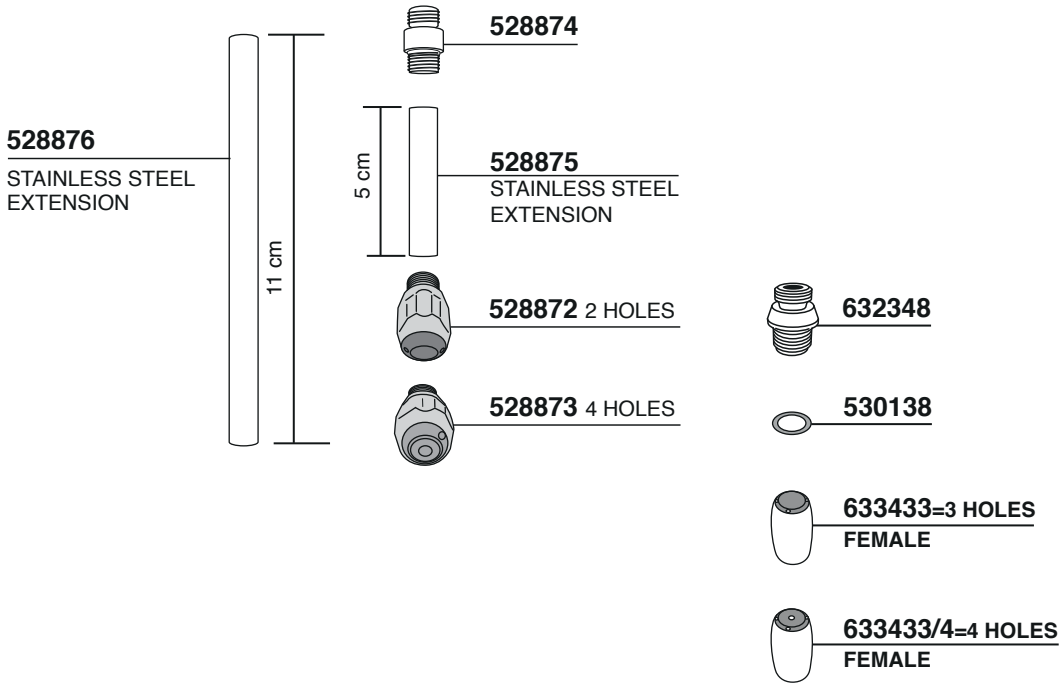
528874
528876
STAINLESS STEEL
EXTENSION
11 cm
5 cm
528875
STAINLESS STEEL
EXTENSION
528872 2 HOLES
632348
528873 4 HOLES
530138
633433=3 HOLES
FEMALE
633433/4=4 HOLES
FEMALE

RANCILIO

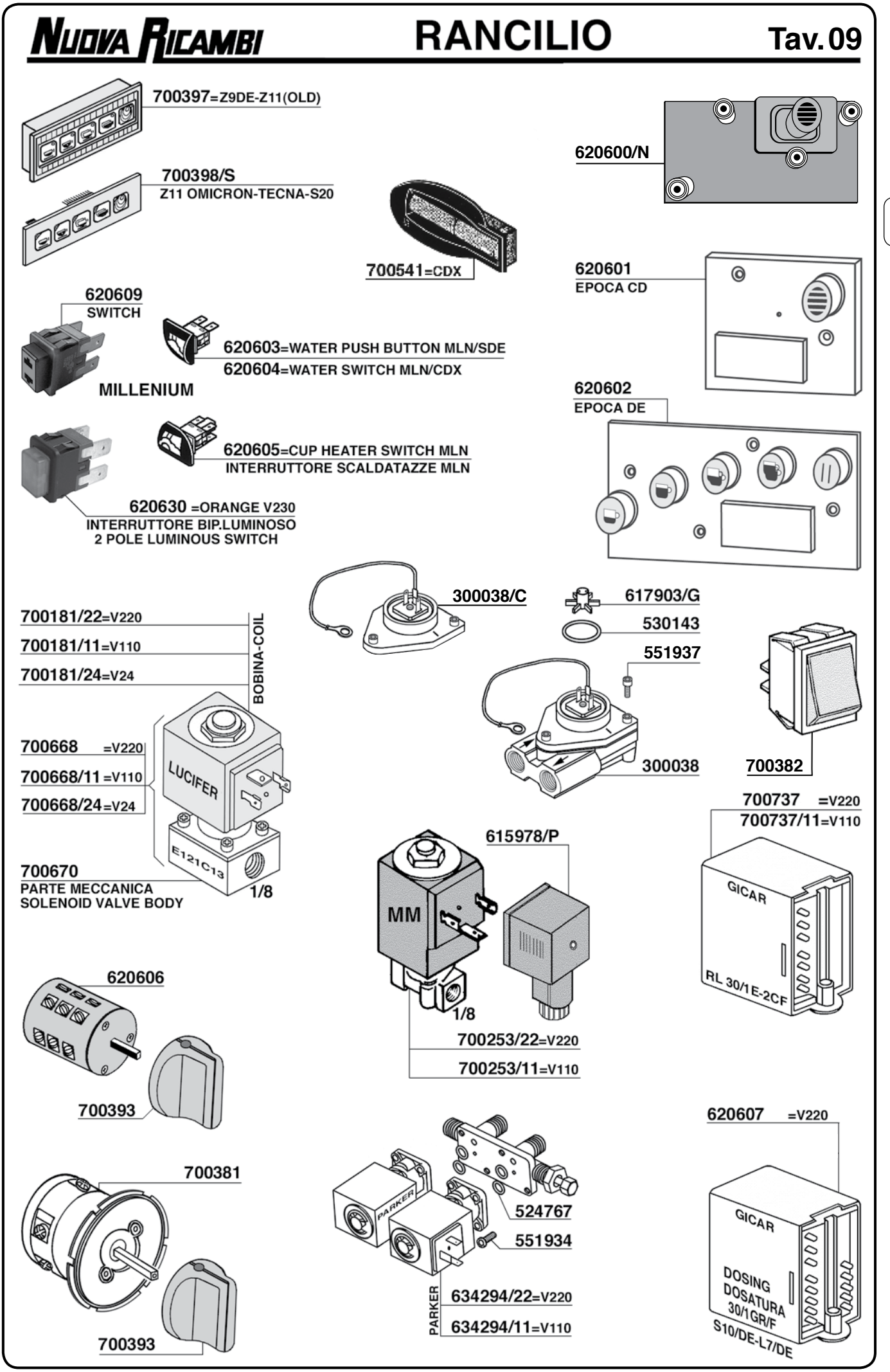
700397=Z9DE-Z11(OLD)
700398/S
Z11 OMICRON-TECNA-S20
620600/N
700541=CDX
620601
EPOCA CD
620609
SWITCH
620603=WATER PUSH BUTTON MLN/SDE
620604=WATER SWITCH MLN/CDX
MILLENIUM
620602
EPOCA DE
620605=CUP HEATER SWITCH MLN
INTERRUTTORE SCALDATAZZE MLN
620630 =ORANGE V230
INTERRUTTORE BIP.LUMINOSO
2 POLE LUMINOUS SWITCH
300038/C
617903/G
530143
551937
700181/22=V220
700181/11=V110
700181/24=V24
BOBINA-COIL
700668 =V220
700668/11 =V110
700668/24=V24
LUCIFER
E121C13
1/8
700670
PARTE MECCANICA
SOLENOID VALVE BODY
300038
700382
700737 =V220
700737/11=V110
615978/P
MM
1/8
GICAR
RL 30/1E-2CF
620606
700253/22=V220
700253/11=V110
700393
620607 =V220
700381
PARKER
524767
551934
634294/22=V220
634294/11=V110
PARKER
GICAR
DOSING
DOSATURA
30/1GR/F
S10/DE-L7/DE
700393

RANCILIO

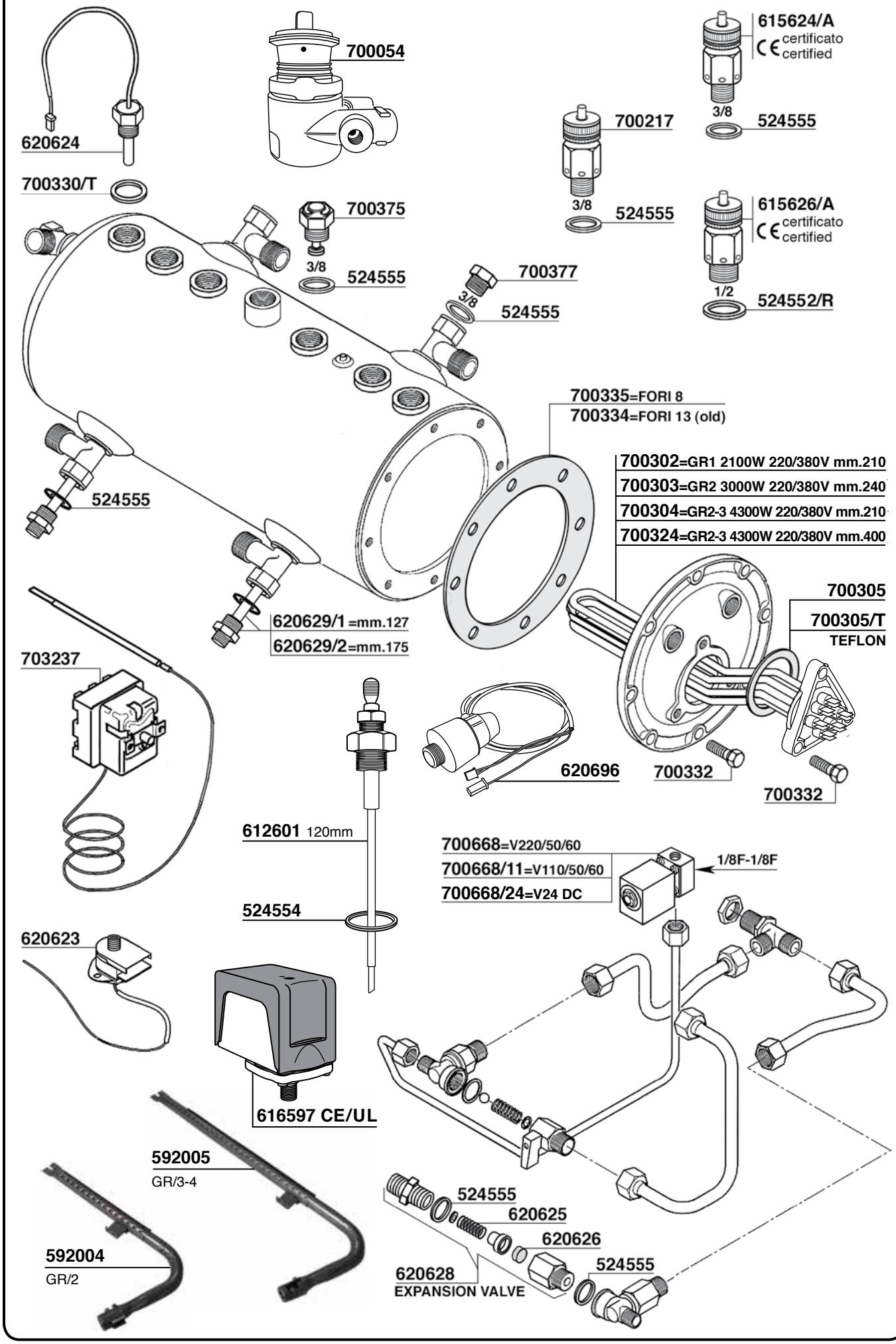
620624
700054
615624/A
certificato
certified
3/8
524555
700217
3/8
524555
700330/T
700375
3/8
524555
615626/A
certificato
certified
1/2
524552/R
700377
3/8
524555
700335=FORI 8
700334=FORI 13 (old)
524555
700302=GR1 2100W 220/380V mm.210
700303=GR2 3000W 220/380V mm.240
700304=GR2-3 4300W 220/380V mm.210
700324=GR2-3 4300W 220/380V mm.400
700305
700305/T
TEFLON
620629/1 =mm.127
620629/2=mm.175
703237
620696
700332
700332
612601 120mm
700668=V220/50/60
700668/11=V110/50/60
700668/24=V24 DC
1/8F-1/8F
524554
620623
616597 CE/UL
592005
GR/3-4
592004
GR/2
524555
620625
620626
524555
620628
EXPANSION VALVE

RANCILIO

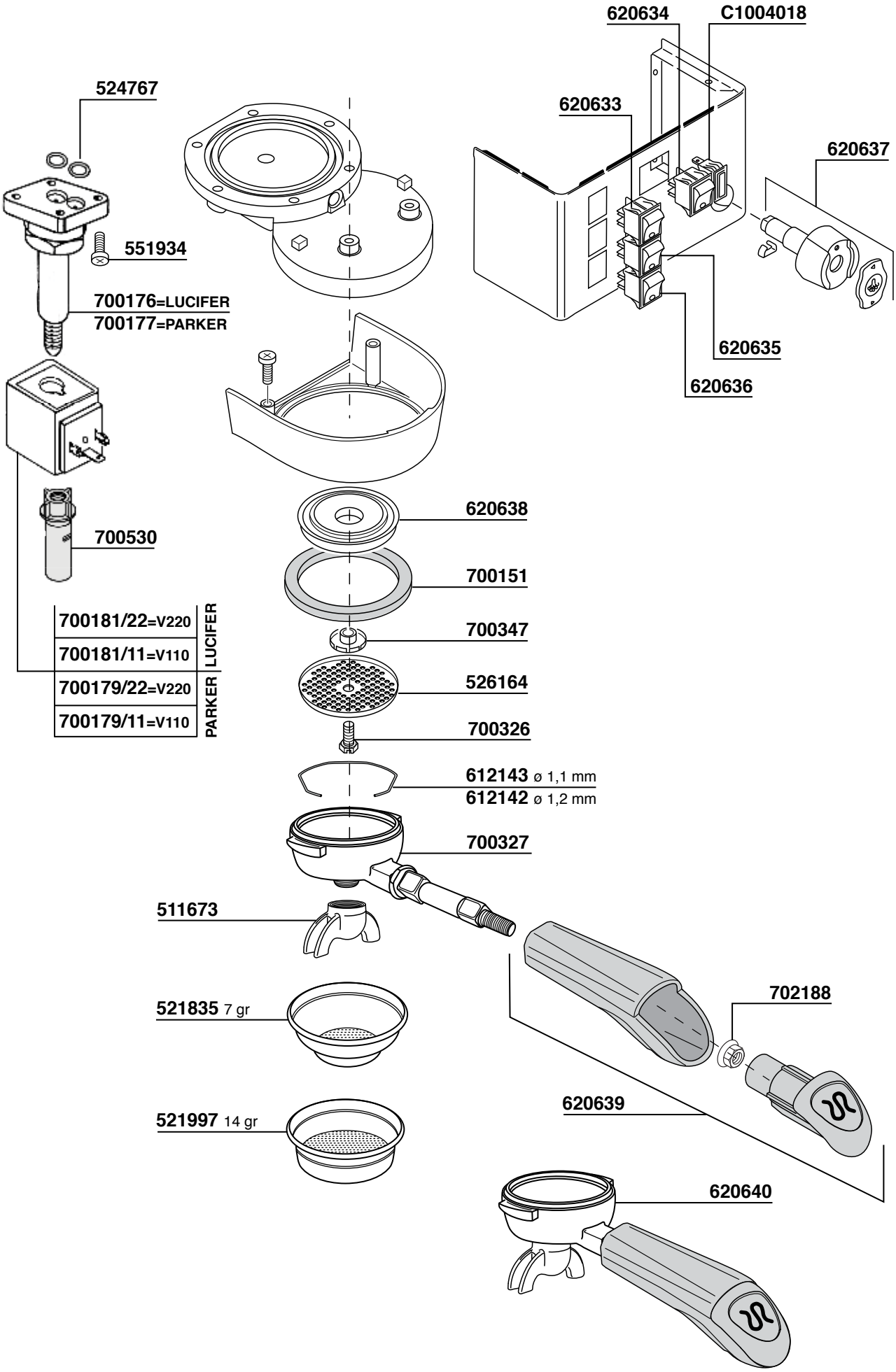
620634
C1004018
620633
620637
524767
551934
700176=LUCIFER
700177=PARKER
620635
620636
620638
700530
700151
700181/22=V220
700181/11=V110
700179/22=V220
700179/11=V110
LUCIFER
PARKER
700347
526164
700326
612143 ø 1,1 mm
612142 ø 1,2 mm
700327
511673
702188
521835 7 gr
620639
521997 14 gr
620640

RANCILIO

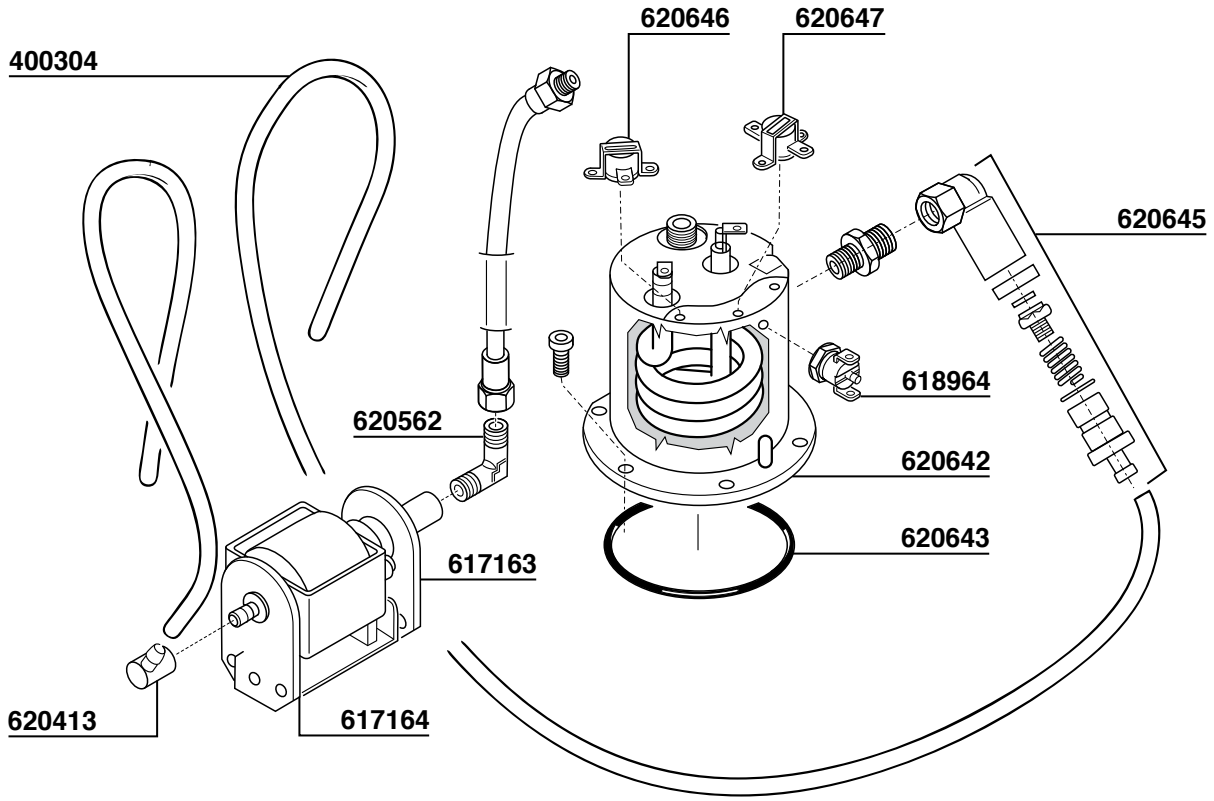
620646
620647
400304
620645
618964
620562
620642
620643
617163
620413
617164

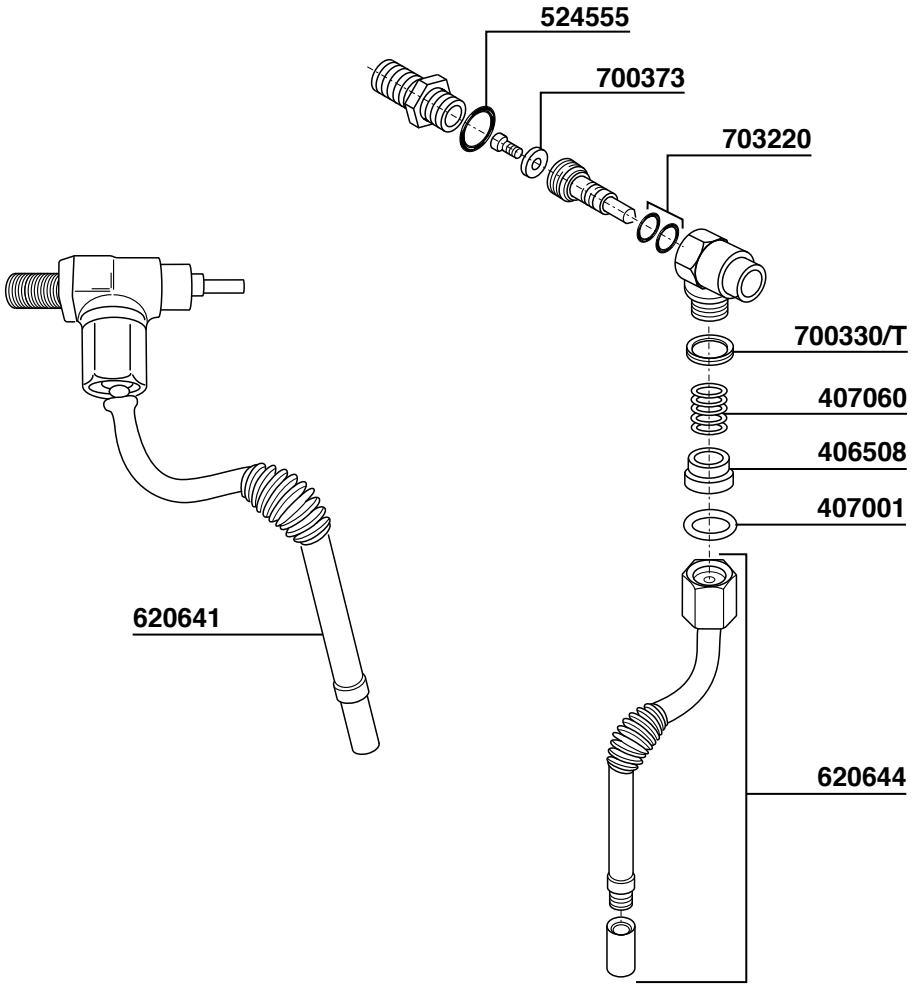
524555
700373
703220
700330/T
407060
406508
407001
620641
620644

SANREMO

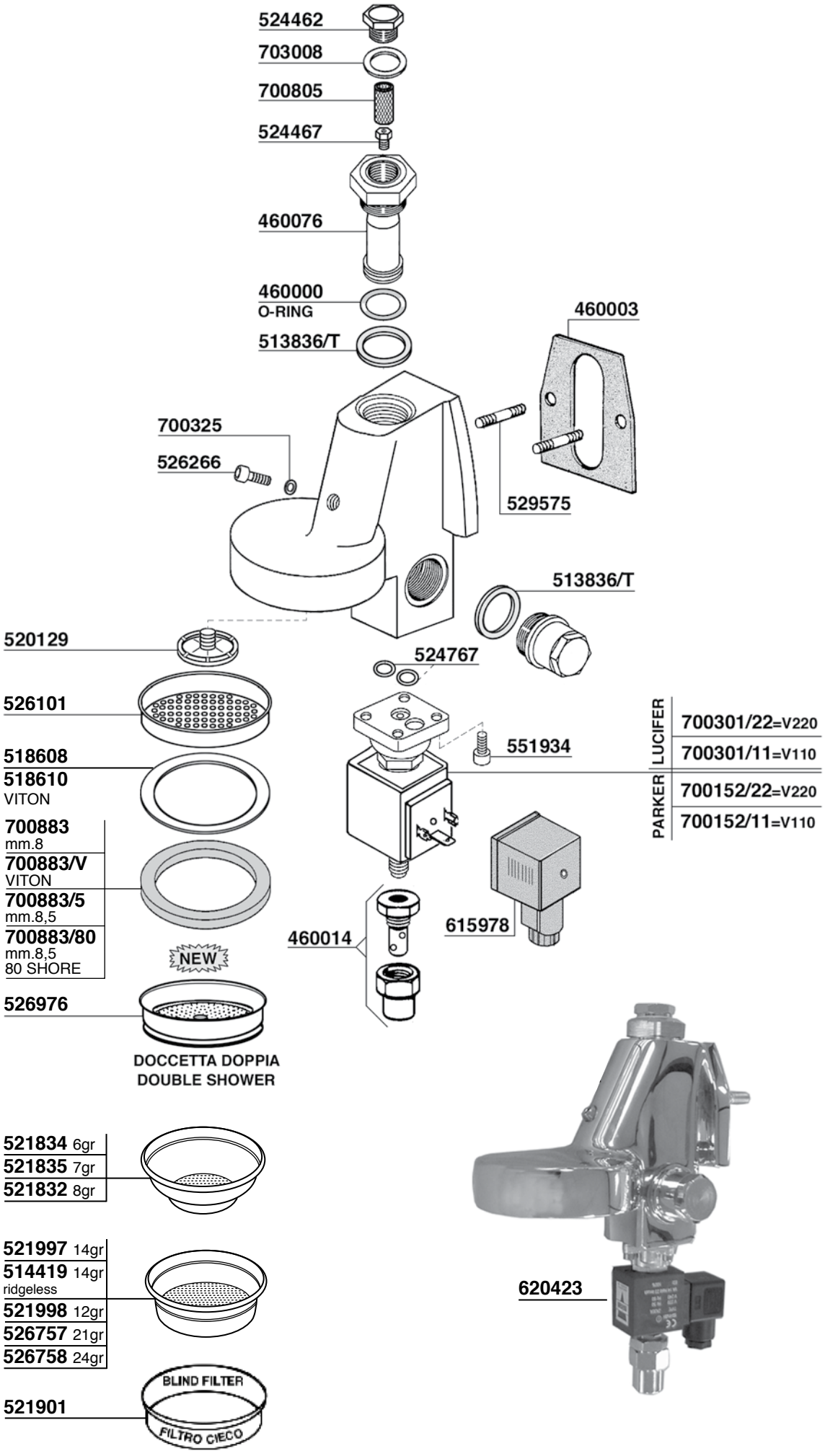
524462
703008
700805
524467
460076
460000
O-RING
513836/T
460003
700325
526266
529575
513836/T
520129
524767
526101
551934
518608
518610
VITON
700883
mm.8
700883/V
VITON
700883/5
mm.8,5
700883/80
mm.8,5
80 SHORE
NEW
526976
DOCCETTA DOPPIA
DOUBLE SHOWER
460014
615978
LUCIFER
700301/22=V220
700301/11=V110
PARKER
700152/22=V220
700152/11=V110
521834 6gr
521835 7gr
521832 8gr
521997 14gr
514419 14gr
ridgeless
521998 12gr
526757 21gr
526758 24gr
521901
BLIND FILTER
FILTRO CIECO
620423

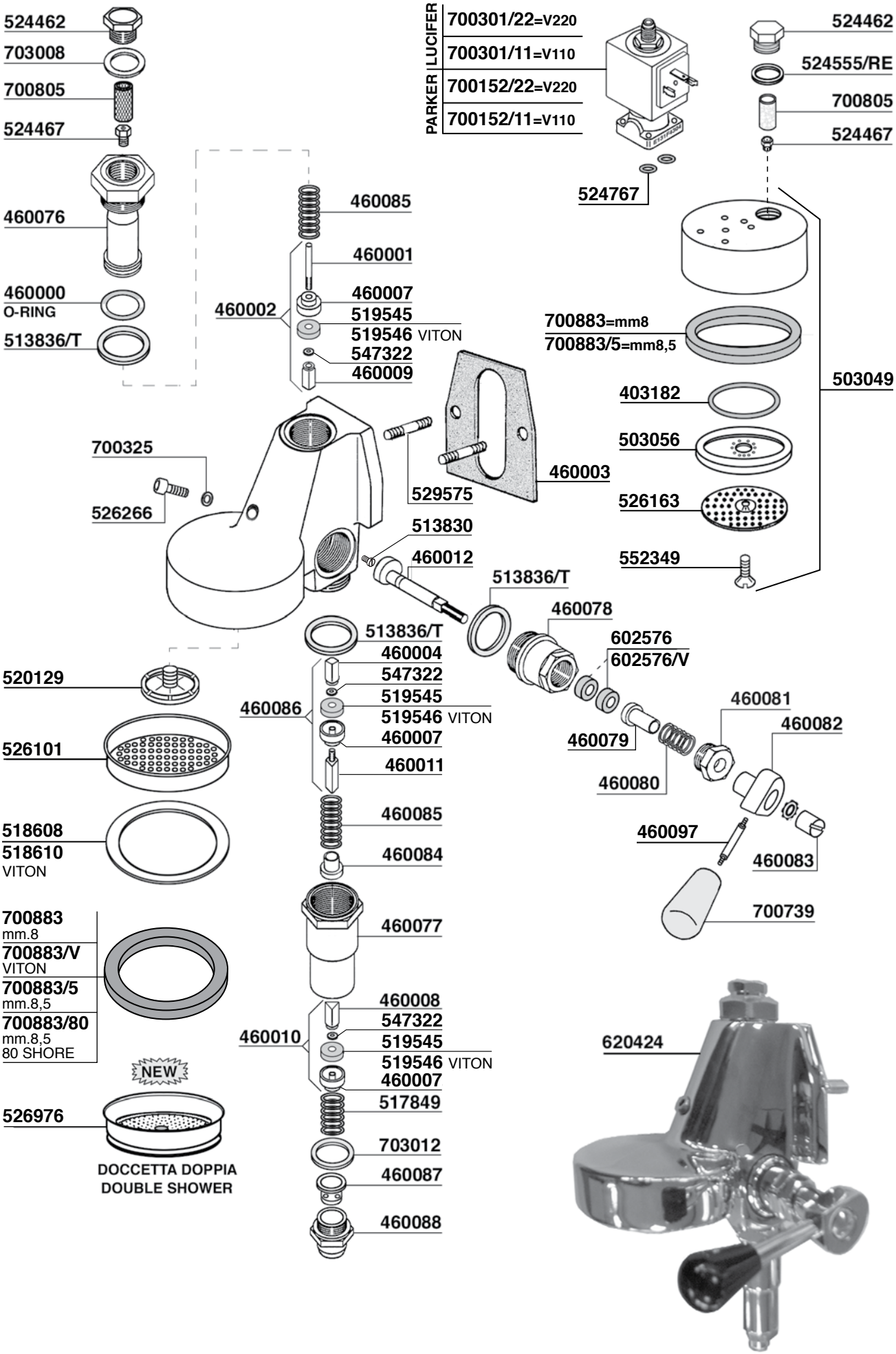
524462
703008
700805
524467
460076
460000
O-RING
513836/T
460085
460001
460002
460007
519545
519546 VITON
547322
460009
700325
526266
529575
460003
513830
460012
513836/T
460078
602576
602576/V
513836/T
460004
547322
519545
460086
519546 VITON
460007
460011
460085
460084
460077
460008
547322
460010
519545
519546 VITON
460007
517849
703012
460087
460088
520129
526101
518608
518610
VITON
700883
mm.8
700883/V
VITON
700883/5
mm.8,5
700883/80
mm.8,5
80 SHORE
NEW
526976
DOCCETTA DOPPIA
DOUBLE SHOWER
PARKER LUCIFER
700301/22=V220
700301/11=V110
700152/22=V220
700152/11=V110
524767
524462
524555/RE
700805
524467
700883=mm8
700883/5=mm8,5
503049
403182
503056
526163
552349
460081
460082
460079
460080
460097
460083
700739
620424

SANREMO

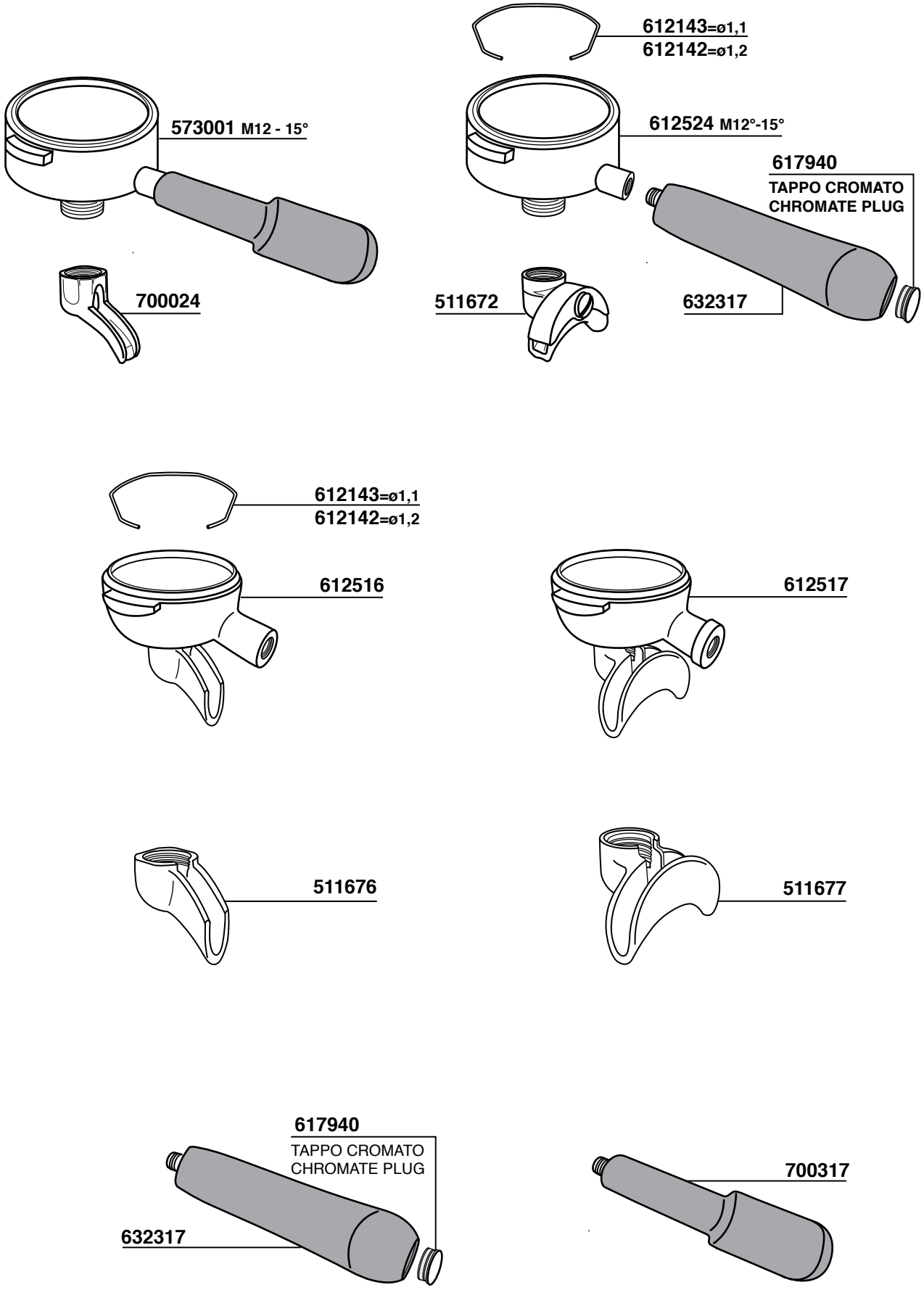
612143=ø1,1
612142=ø1,2
573001 M12 - 15°
612524 M12°-15°
617940
TAPPO CROMATO
CHROMATE PLUG
700024
511672
632317
612143=ø1,1
612142=ø1,2
612516
612517
511676
511677
617940
TAPPO CROMATO
CHROMATE PLUG
632317
700317

SANREMO

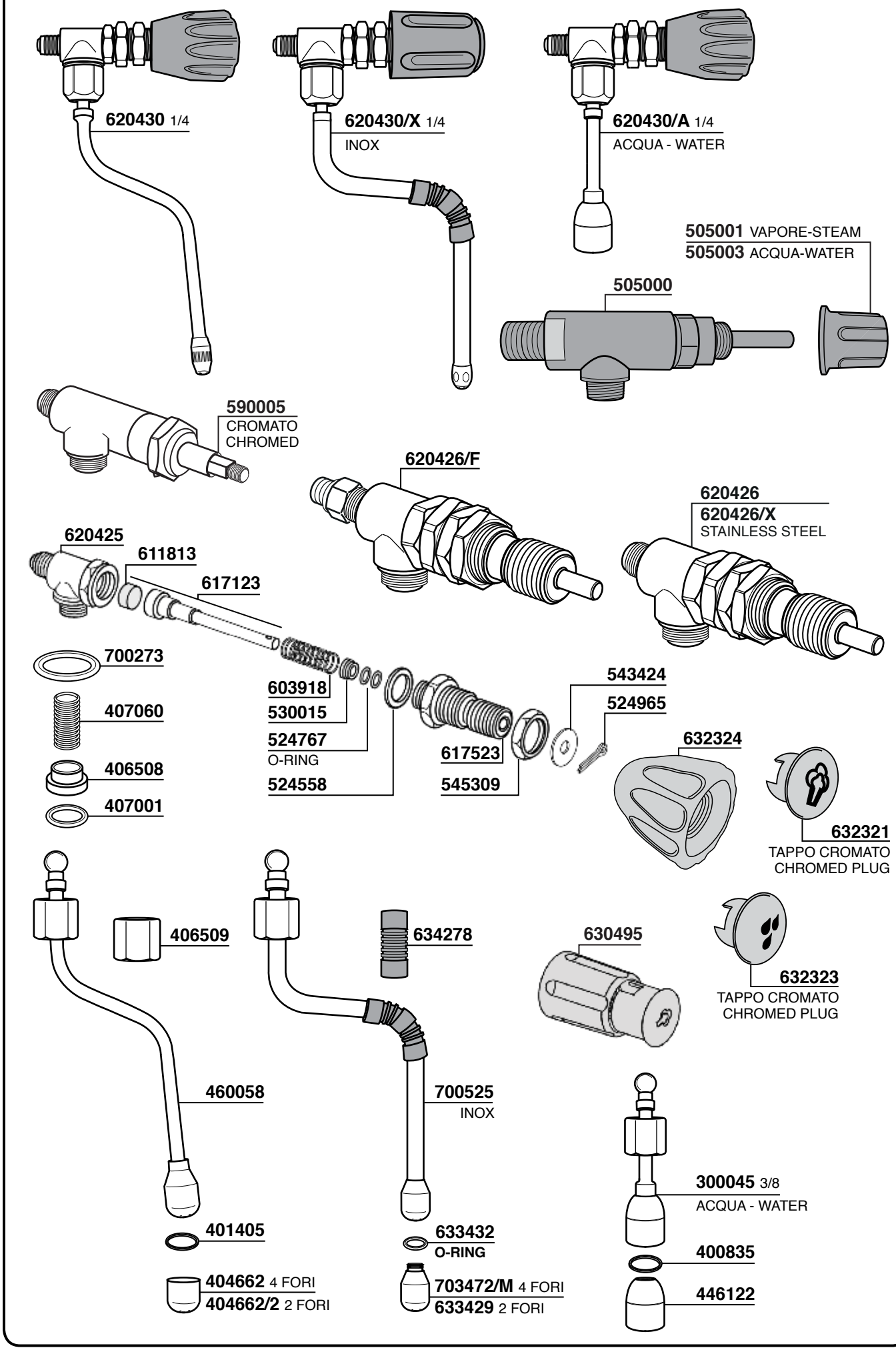
620430 1/4
620430/X 1/4
INOX
620430/A 1/4
ACQUA - WATER
505001 VAPORE-STEAM
505003 ACQUA-WATER
505000
590005
CROMATO
CHROMED
620426/F
620426
620426/X
STAINLESS STEEL
620425
611813
617123
700273
407060
406508
407001
603918
530015
524767
O-RING
524558
617523
545309
543424
524965
632324
632321
TAPPO CROMATO
CHROMED PLUG
406509
634278
630495
632323
TAPPO CROMATO
CHROMED PLUG
460058
700525
INOX
300045 3/8
ACQUA - WATER
401405
633432
O-RING
400835
404662 4 FORI
404662/2 2 FORI
703472/M 4 FORI
633429 2 FORI
446122

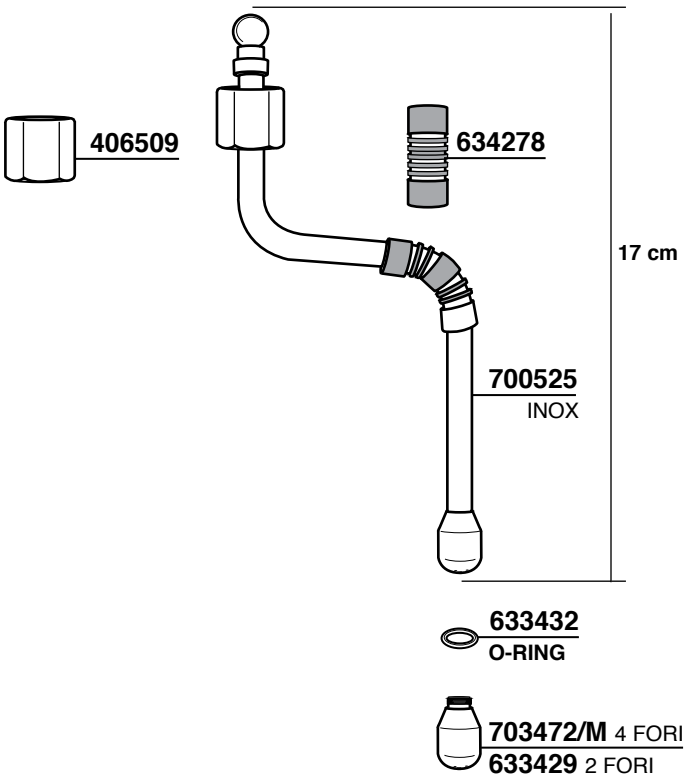
406509
634278
17 cm
700525
INOX
633432
O-RING
703472/M 4 FORI
633429 2 FORI

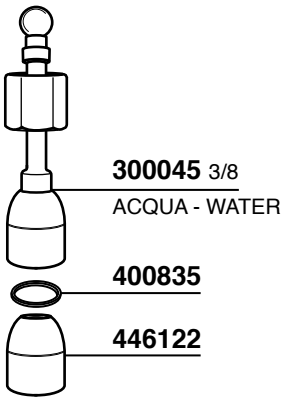
300045 3/8
ACQUA - WATER
400835
446122

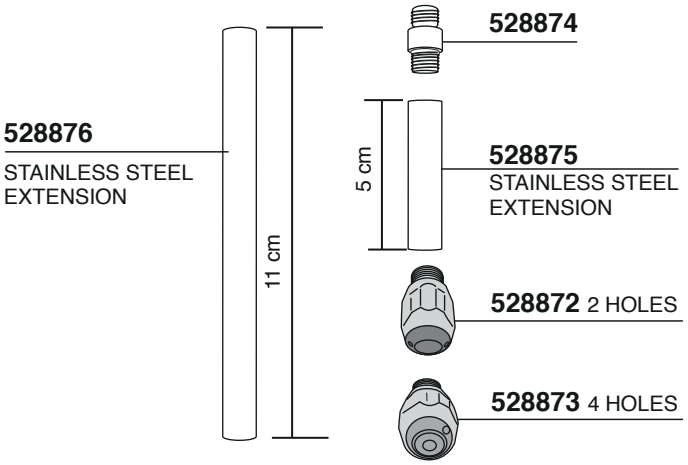
528874
528876
STAINLESS STEEL
EXTENSION
5 cm
528875
STAINLESS STEEL
EXTENSION
11 cm
528872 2 HOLES
528873 4 HOLES

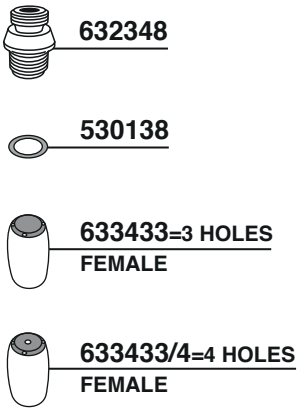
632348
530138
633433=3 HOLES
FEMALE
633433/4=4 HOLES
FEMALE

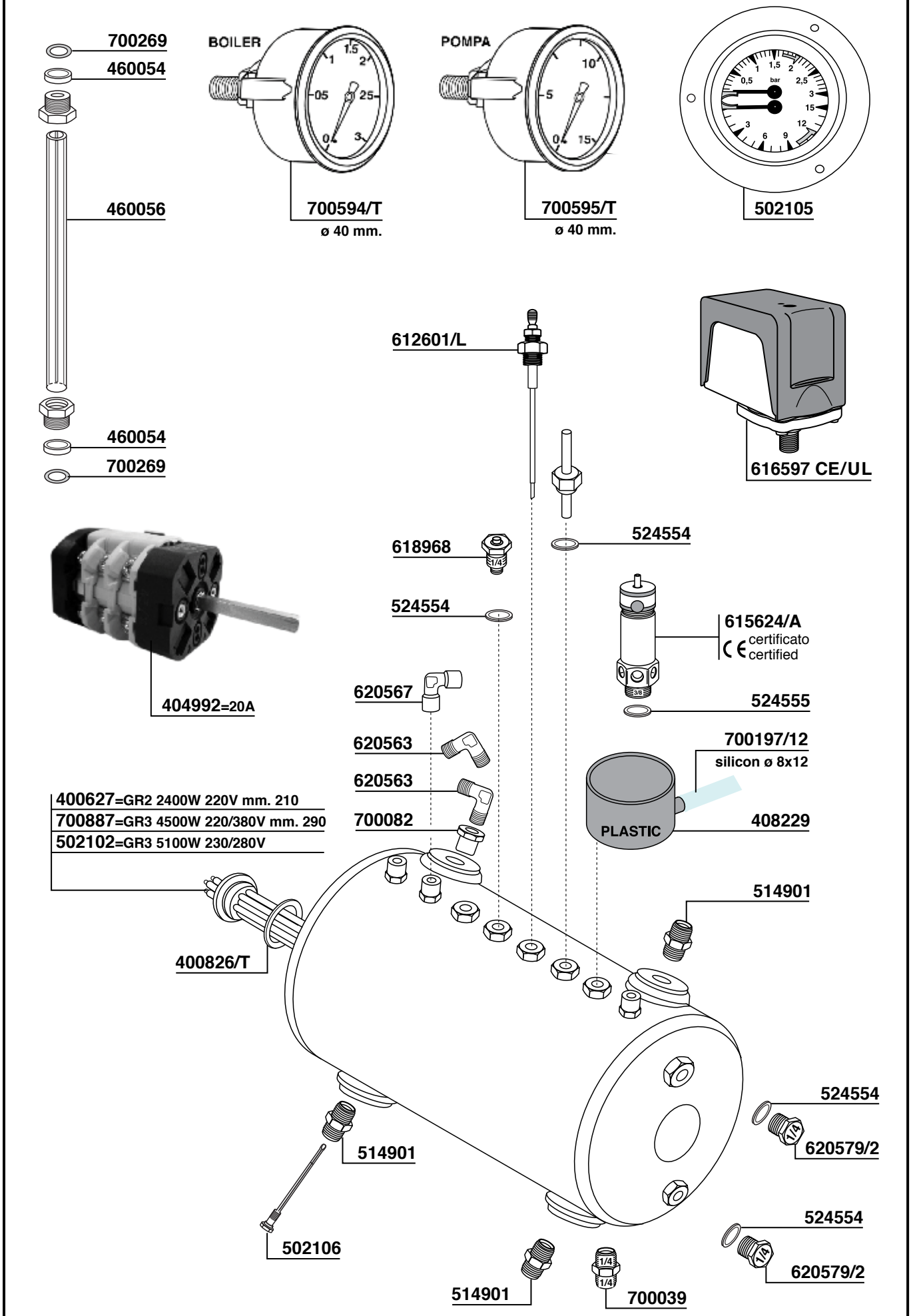
700269
460054
460056
460054
700269
BOILER
700594/T
ø 40 mm.
POMPA
700595/T
ø 40 mm.
502105
612601/L
616597 CE/UL
618968
524554
524554
615624/A
certificato
certified
524555
404992=20A
620567
620563
620563
700082
700197/12
silicon ø 8x12
PLASTIC
408229
400627=GR2 2400W 220V mm. 210
700887=GR3 4500W 220/380V mm. 290
502102=GR3 5100W 230/280V
400826/T
514901
524554
620579/2
514901
502106
524554
620579/2
514901
700039

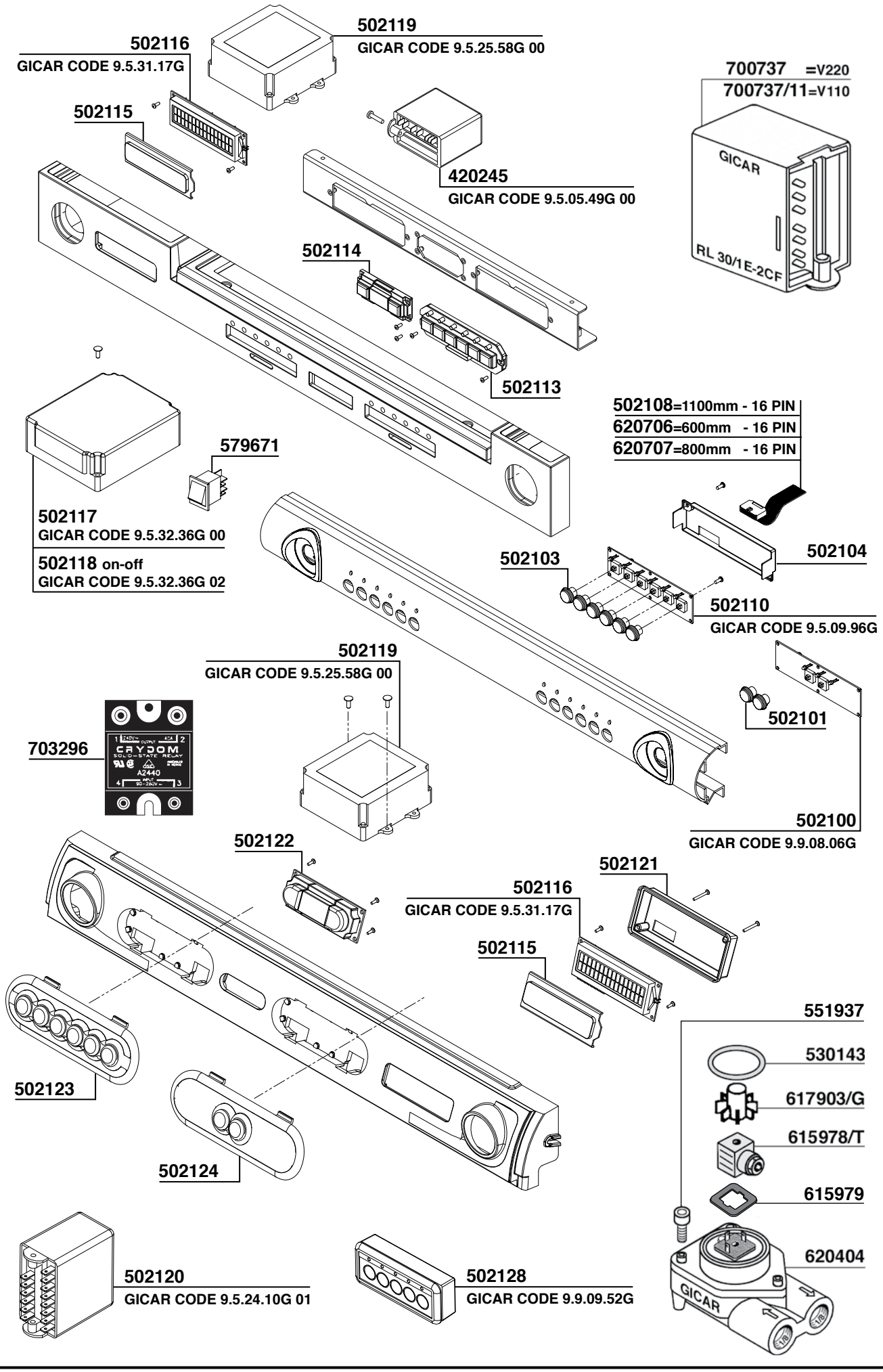
502119
GICAR CODE 9.5.25.58G 00
502116
GICAR CODE 9.5.31.17G
502115
700737 =V220
700737/11=V110
GICAR
RL 30/1E-2CF
420245
GICAR CODE 9.5.05.49G 00
502114
502113
502108=1100mm - 16 PIN
620706=600mm - 16 PIN
620707=800mm - 16 PIN
579671
502117
GICAR CODE 9.5.32.36G 00
502118 on-off
GICAR CODE 9.5.32.36G 02
502104
502103
502110
GICAR CODE 9.5.09.96G
502119
GICAR CODE 9.5.25.58G 00
502101
703296
CRYDOM
SOLID-STATE RELAY
A2440
502100
GICAR CODE 9.9.08.06G
502122
502121
502116
GICAR CODE 9.5.31.17G
502115
551937
530143
617903/G
615978/T
615979
620404
GICAR
502123
502124
502120
GICAR CODE 9.5.24.10G 01
502128
GICAR CODE 9.9.09.52G

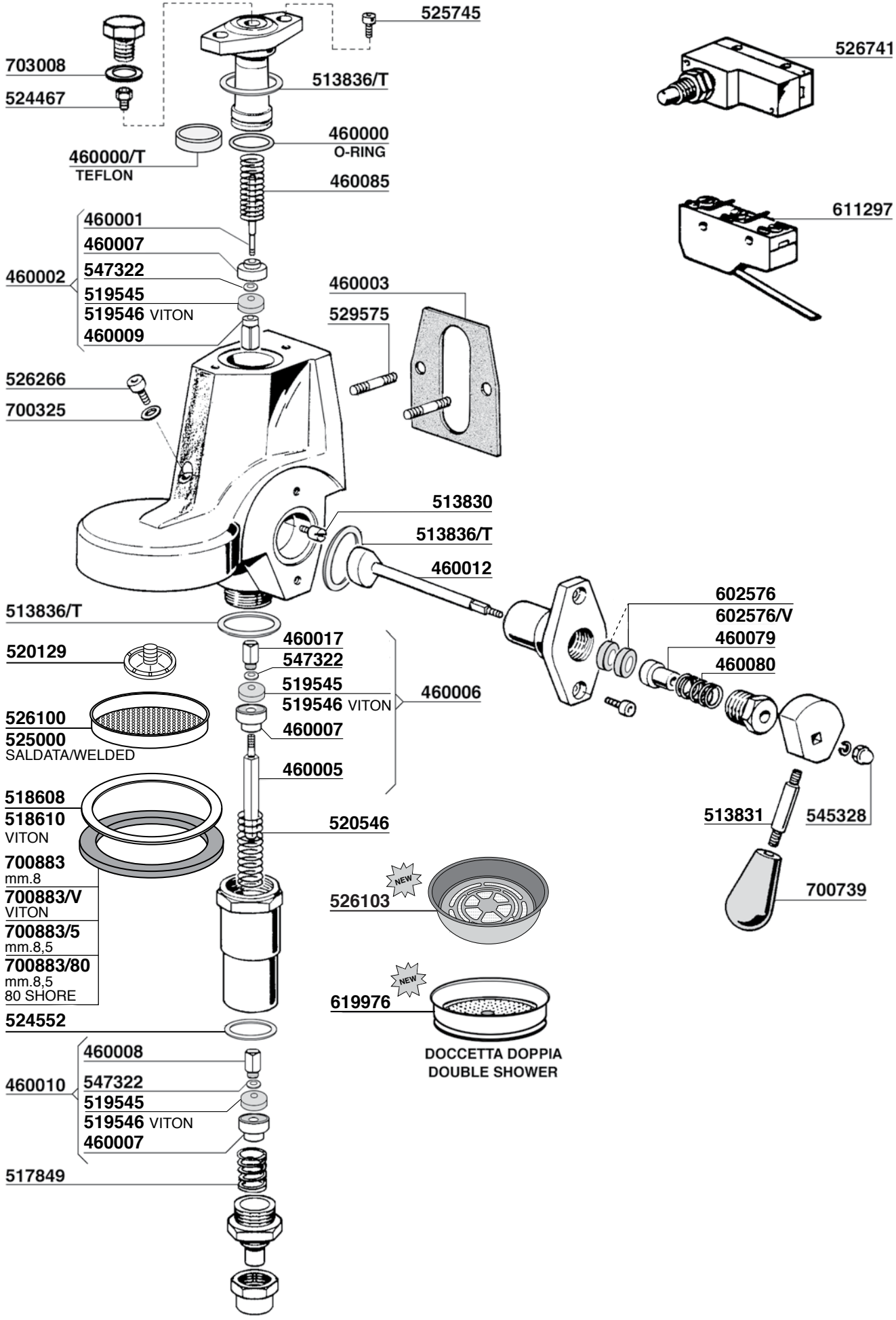
525745
703008
524467
513836/T
526741
460000
O-RING
460000/T
TEFLON
460085
611297
460001
460007
547322
460002
519545
519546 VITON
460009
460003
529575
526266
700325
513830
513836/T
460012
602576
602576/V
460079
460080
513836/T
460017
547322
520129
519545
519546 VITON
460006
526100
525000
SALDATA/WELDED
460007
460005
518608
518610
VITON
520546
513831
545328
700883
mm.8
700883/V
VITON
700883/5
mm.8,5
700883/80
mm.8,5
80 SHORE
526103
NEW
700739
619976
NEW
524552
DOCCETTA DOPPIA
DOUBLE SHOWER
460008
460010
547322
519545
519546 VITON
460007
517849

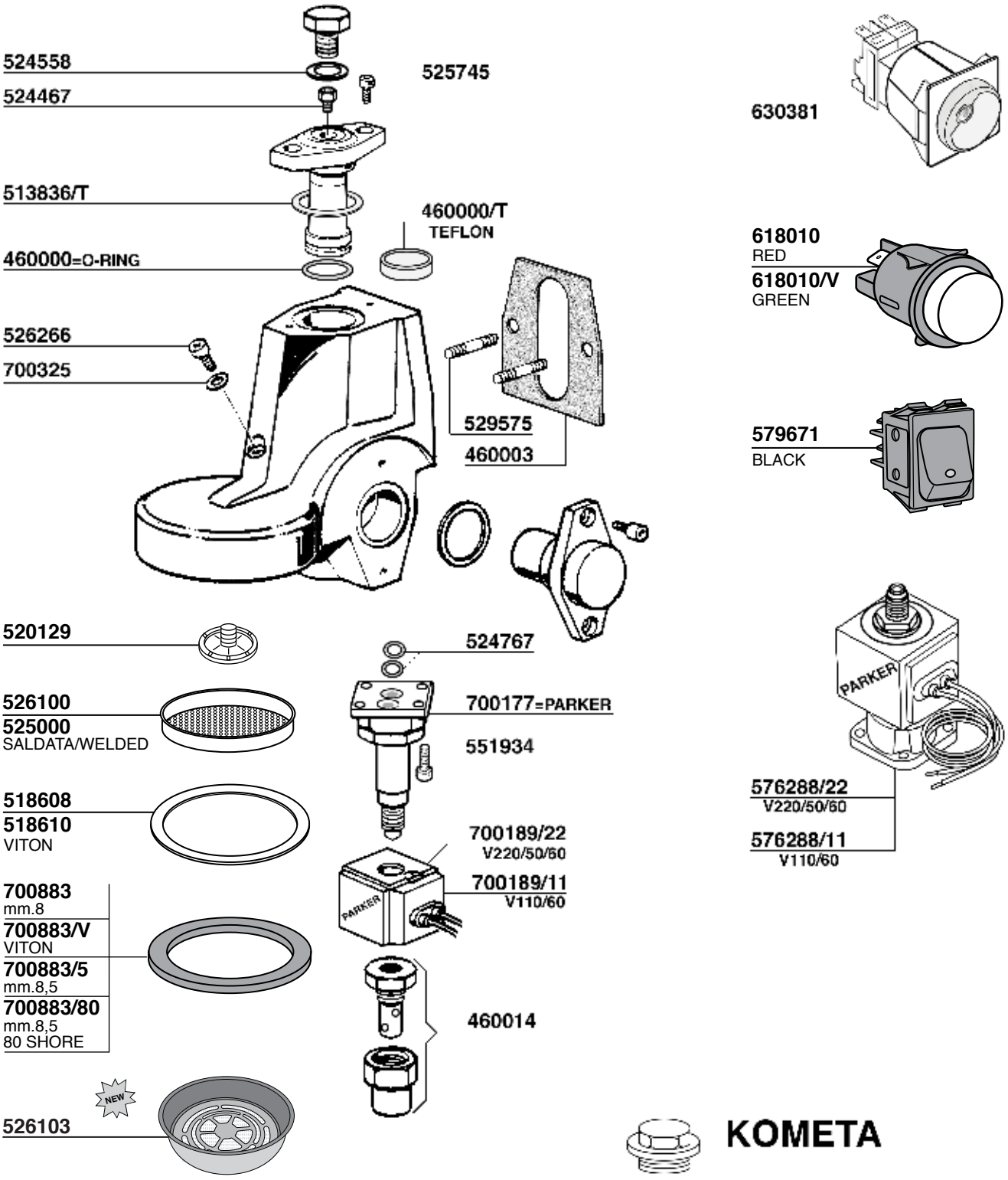
524558
524467
525745
513836/T
460000/T
TEFLON
460000=O-RING
526266
700325
529575
460003
630381
618010
RED
618010/V
GREEN
579671
BLACK
520129
524767
526100
525000
SALDATA/WELDED
700177=PARKER
551934
518608
518610
VITON
700189/22
V220/50/60
700189/11
V110/60
PARKER
576288/22
V220/50/60
576288/11
V110/60
700883
mm.8
700883/V
VITON
700883/5
mm.8,5
700883/80
mm.8,5
80 SHORE
460014
NEW
526103

KOMETA

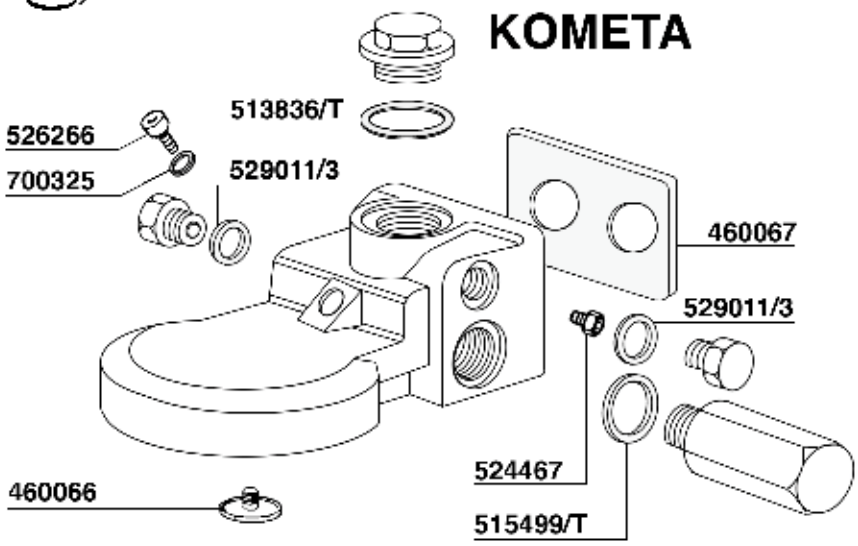
513836/T
526266
700325
529011/3
460067
529011/3
524467
460066
515499/T

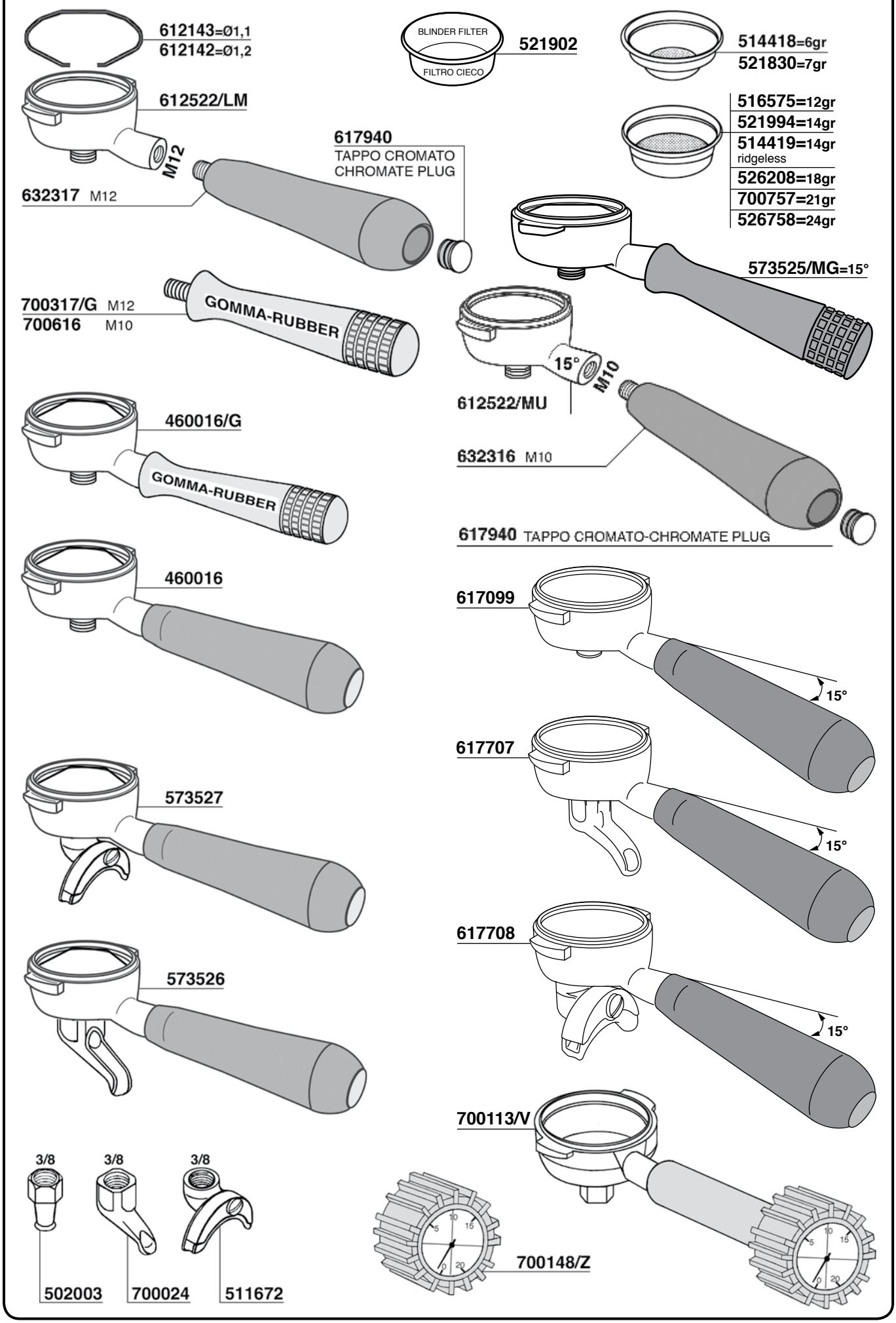
612143=Ø1,1
612142=Ø1,2
BLINDER FILTER
FILTRO CIECO
521902
514418=6gr
521830=7gr
612522/LM
M12
617940
TAPPO CROMATO
CHROMATE PLUG
632317 M12
516575=12gr
521994=14gr
514419=14gr
ridgeless
526208=18gr
700757=21gr
526758=24gr
573525/MG=15°
700317/G M12
700616 M10
GOMMA-RUBBER
15°
M10
612522/MU
632316 M10
617940 TAPPO CROMATO-CHROMATE PLUG
460016/G
GOMMA-RUBBER
460016
617099
15°
617707
15°
573527
617708
15°
573526
700113/V
3/8
3/8
3/8
700148/Z
502003
700024
511672

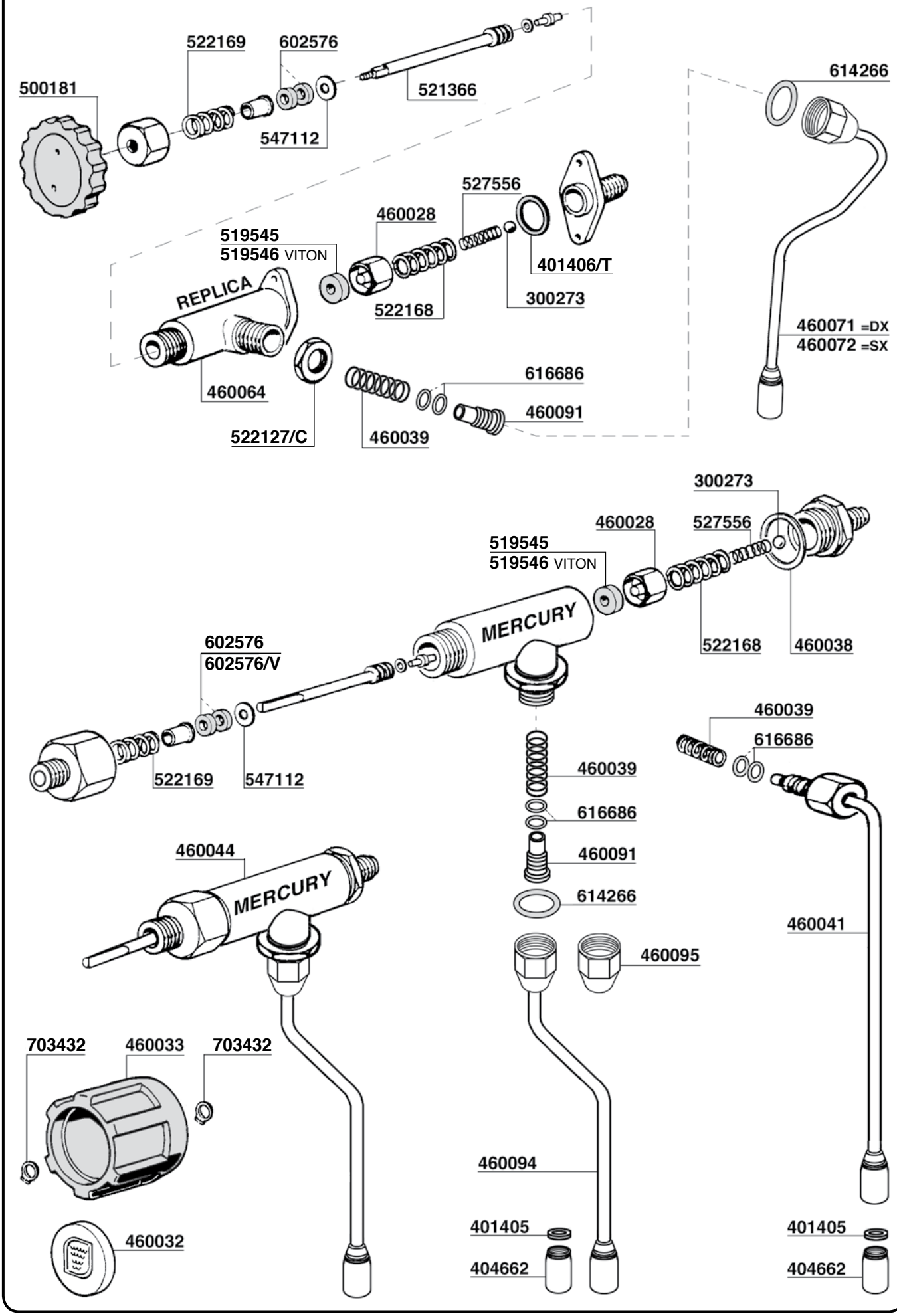
500181
522169
602576
521366
547112
614266
527556
460028
519545
519546 VITON
401406/T
REPLICA
522168
300273
460071 =DX
460072 =SX
616686
460064
460091
522127/C
460039
300273
460028
527556
519545
519546 VITON
MERCURY
522168
460038
602576
602576/V
460039
616686
522169
547112
460039
616686
460044
MERCURY
460091
614266
460041
460095
703432
460033
703432
460094
401405
404662
401405
404662
460032

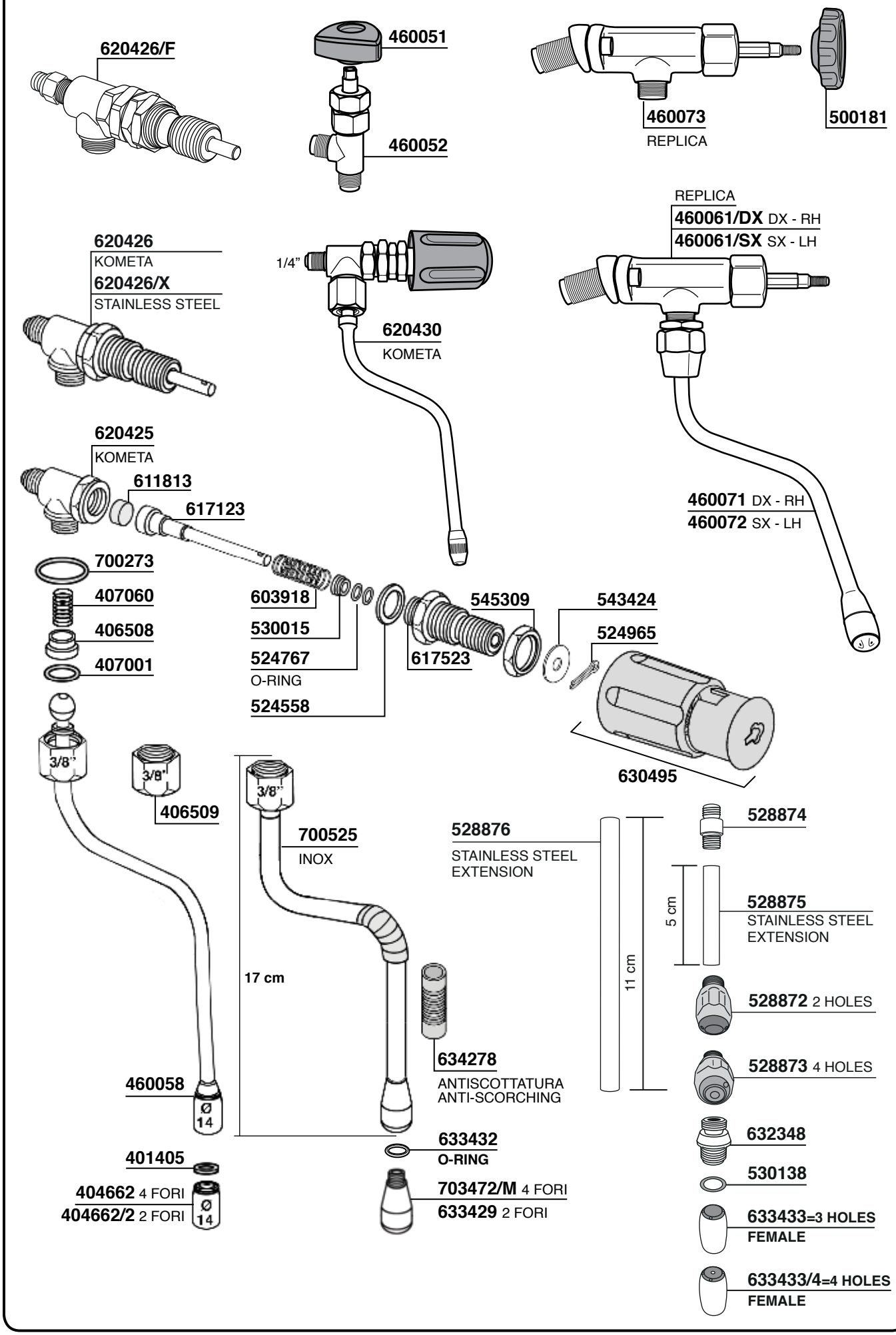
620426/F
460051
460052
460073
REPLICA
500181
REPLICA
460061/DX DX - RH
460061/SX SX - LH
620426
KOMETA
620426/X
STAINLESS STEEL
1/4"
620430
KOMETA
620425
KOMETA
611813
617123
460071 DX - RH
460072 SX - LH
700273
407060
406508
407001
603918
530015
524767
O-RING
524558
617523
545309
543424
524965
630495
3/8"
406509
700525
INOX
528876
STAINLESS STEEL
EXTENSION
528874
5 cm
528875
STAINLESS STEEL
EXTENSION
17 cm
11 cm
528872 2 HOLES
634278
ANTISCOTTATURA
ANTI-SCORCHING
528873 4 HOLES
460058
Ø 14
632348
633432
O-RING
401405
530138
404662 4 FORI
404662/2 2 FORI
703472/M 4 FORI
633429 2 FORI
633433=3 HOLES
FEMALE
633433/4=4 HOLES
FEMALE

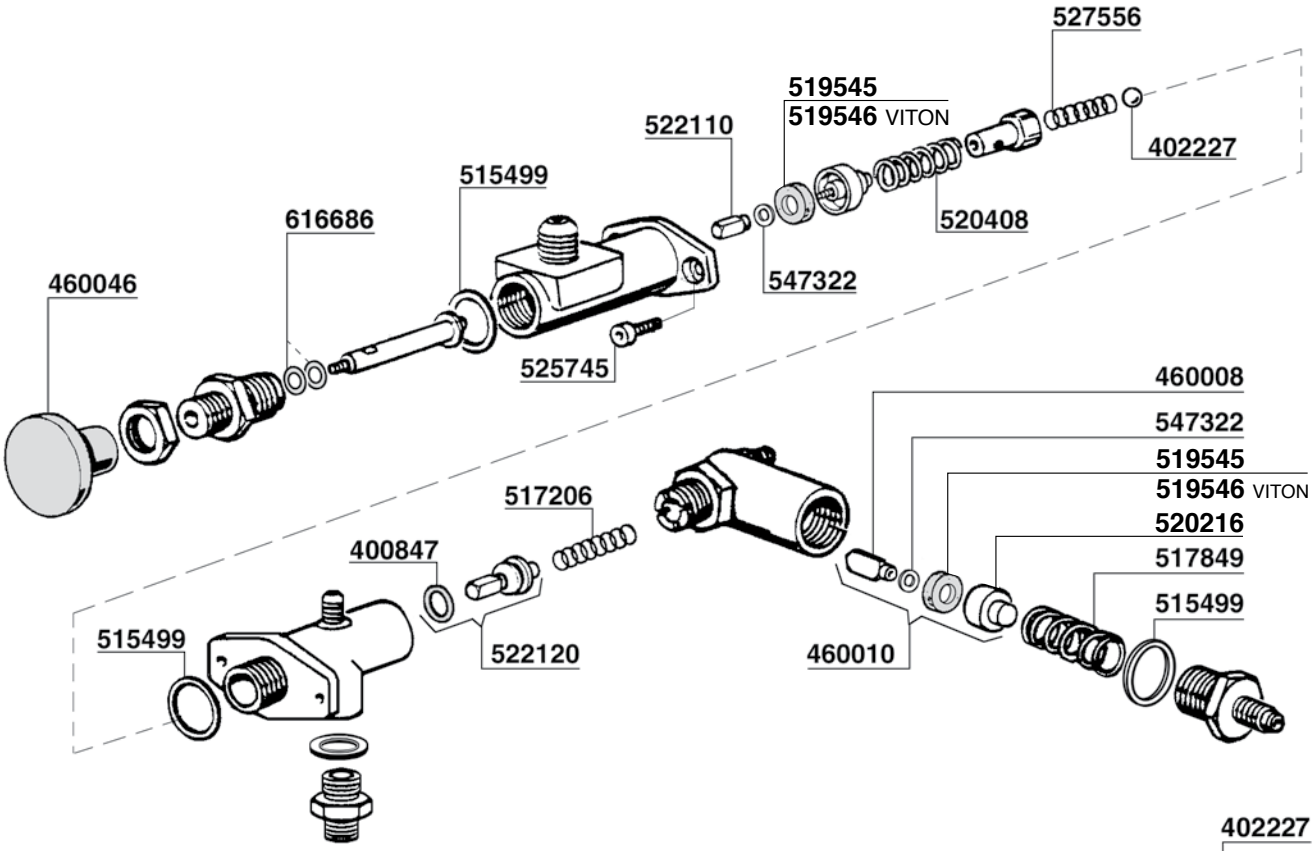
527556
519545
519546 VITON
522110
402227
515499
520408
616686
547322
460046
525745
460008
547322
519545
519546 VITON
517206
520216
400847
517849
515499
515499
522120
460010

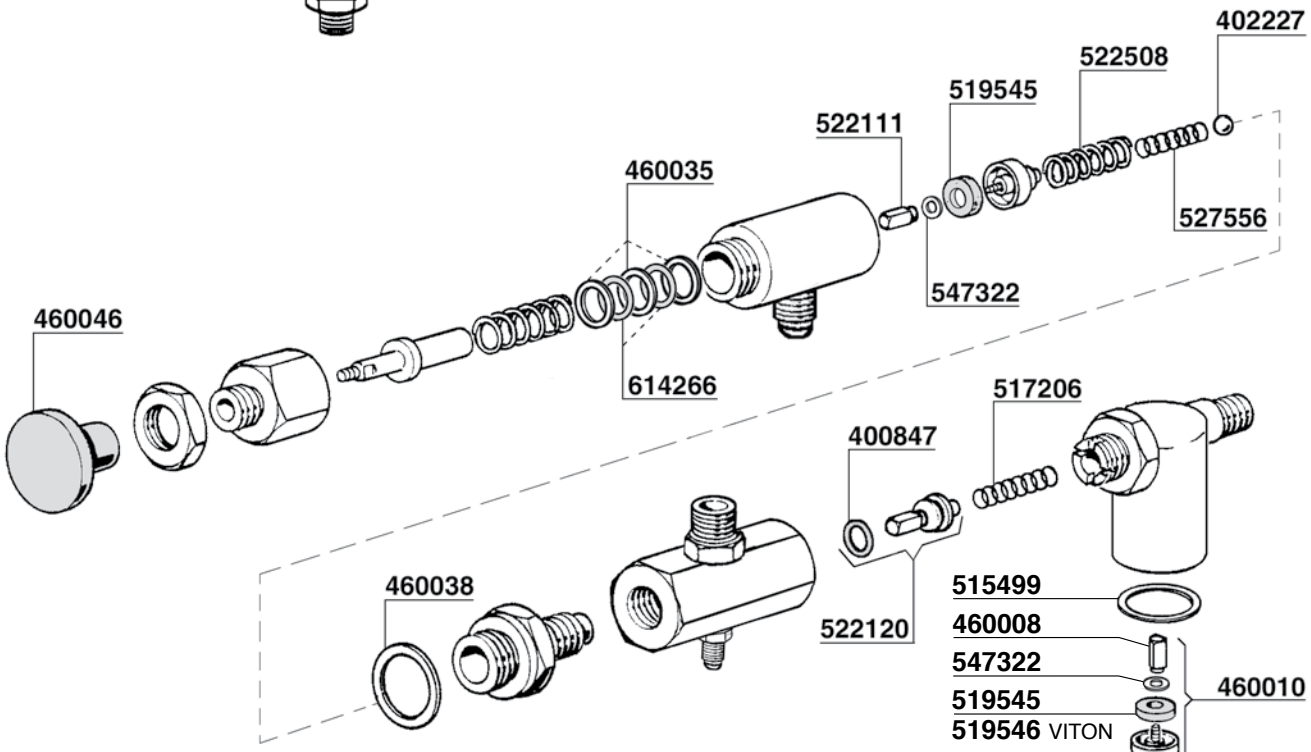
402227
522508
519545
522111
460035
527556
547322
460046
614266
517206
400847
460038
515499
522120
460008
547322
460010
519545
519546 VITON
520216
517849

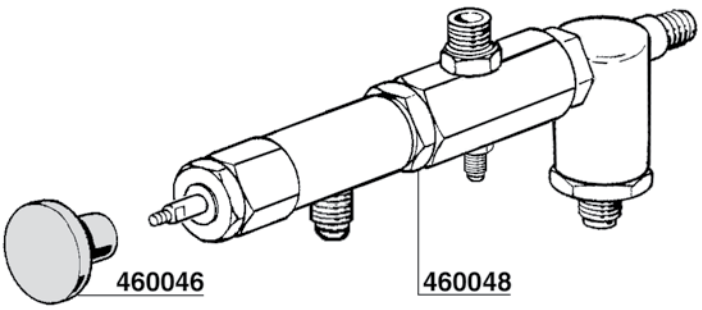
460046
460048

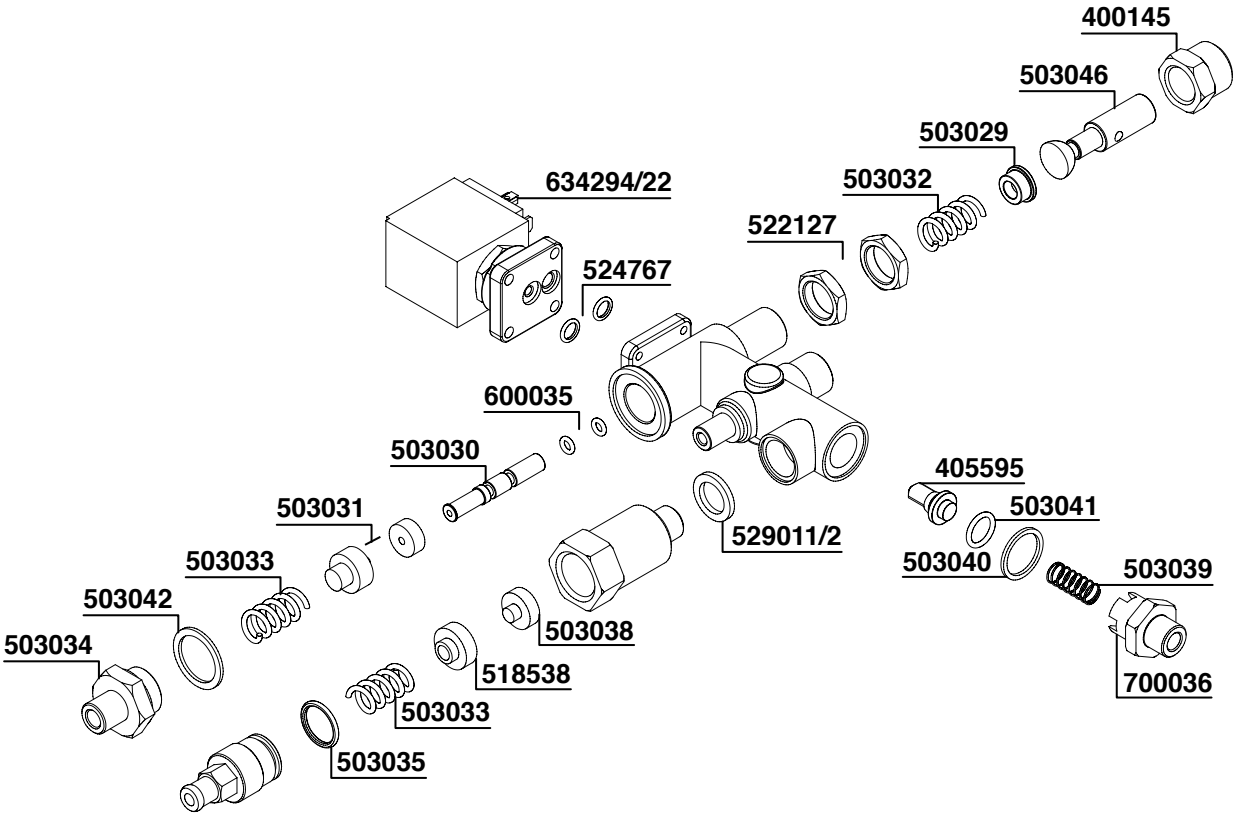
400145
503046
503029
503032
522127
634294/22
524767
600035
503030
503031
503033
503042
503034
503035
503033
518538
503038
529011/2
405595
503041
503040
503039
700036

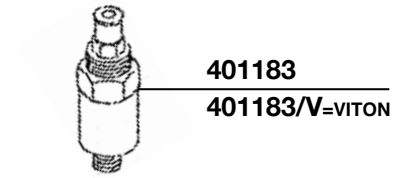
401183
401183/V=VITON

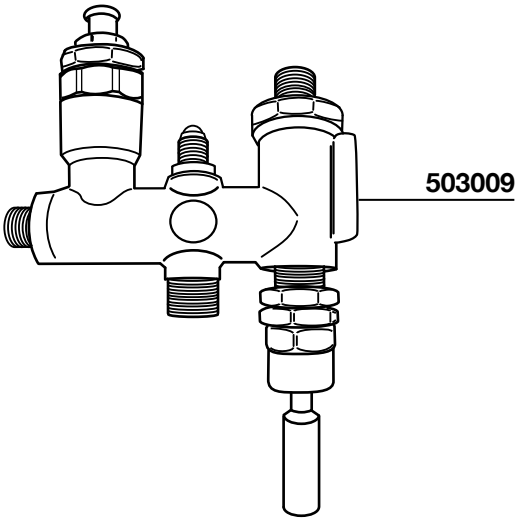
503009

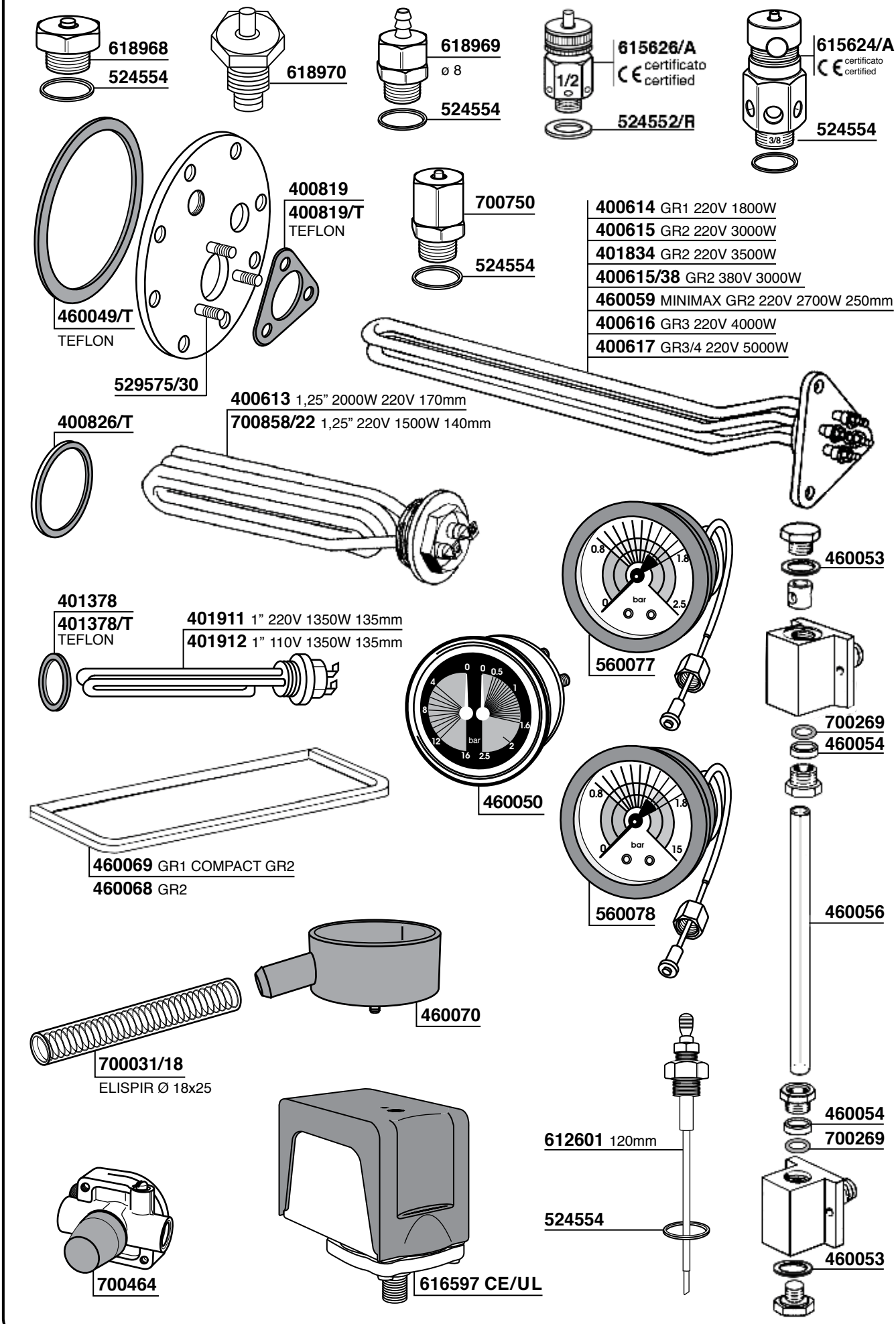
618968
524554
618970
618969
ø 8
524554
615626/A
certificato
certified
1/2
524552/R
615624/A
certificato
certified
3/8
524554
400819
400819/T
TEFLON
460049/T
TEFLON
529575/30
700750
524554
400614 GR1 220V 1800W
400615 GR2 220V 3000W
401834 GR2 220V 3500W
400615/38 GR2 380V 3000W
460059 MINIMAX GR2 220V 2700W 250mm
400616 GR3 220V 4000W
400617 GR3/4 220V 5000W
400826/T
400613 1,25" 2000W 220V 170mm
700858/22 1,25" 220V 1500W 140mm
460053
401378
401378/T
TEFLON
401911 1" 220V 1350W 135mm
401912 1" 110V 1350W 135mm
560077
700269
460054
460050
460069 GR1 COMPACT GR2
460068 GR2
560078
460056
460070
700031/18
ELISPIR Ø 18x25
460054
700269
612601 120mm
524554
460053
700464
616597 CE/UL

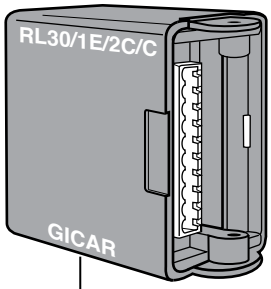

460062 220V
460062/11 110V

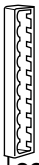

620709/10
CONNETTORE 10 PIN

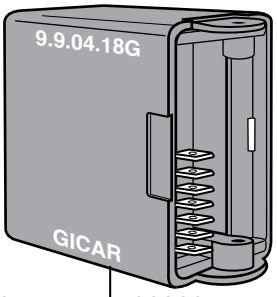

460029 GR2/3
DE LUX

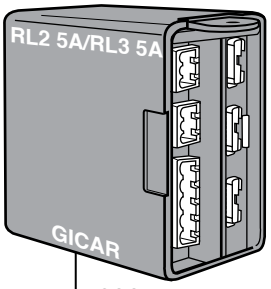

460075 GR1 220V
KOMETA

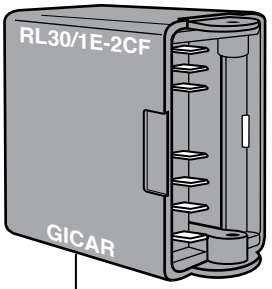

700737 220V
700737/11 110V

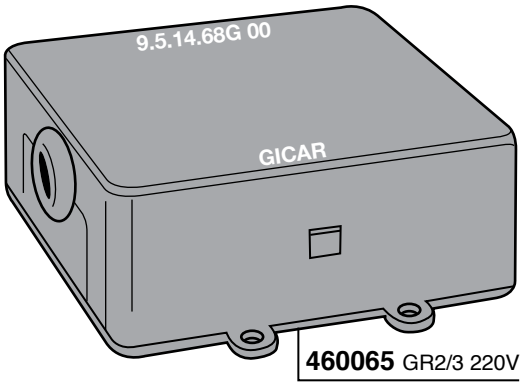

460065 GR2/3 220V
GICAR 3D

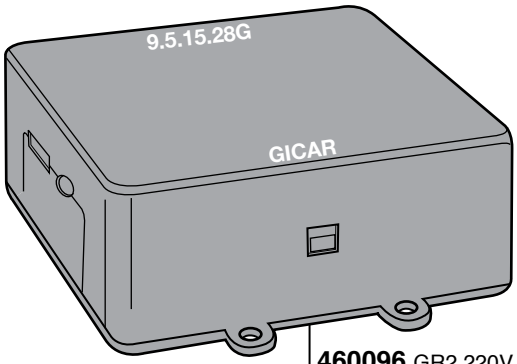

460096 GR2 220V
GICAR 3D5

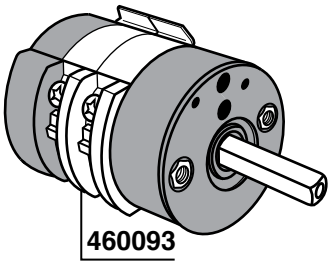

460093

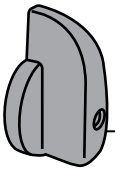

613656

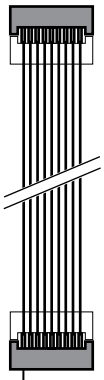

620714
8 pin 800 mm

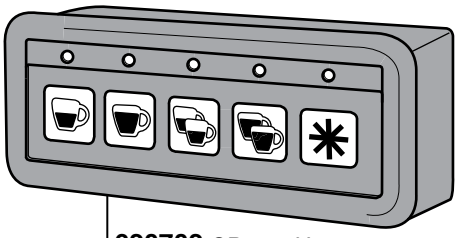

620702 GR1 220V
PULSANTIERA + CENTRALINA
TOUCH PAD + ELECTRONIC BOX

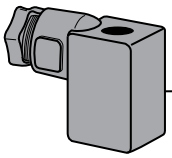

615978/T

615979

530143

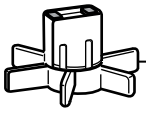

617903

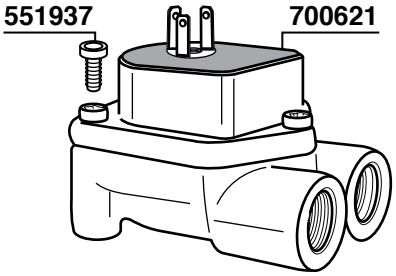

551937
700621

700869/22 220V
700869/11 110V

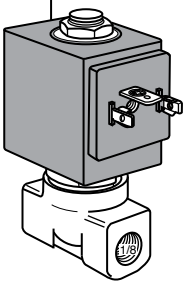

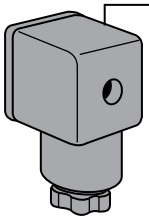

615978

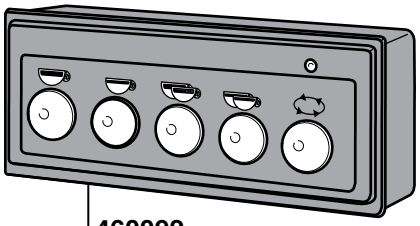

460092
PULSANTIERA - TOUCH PAD

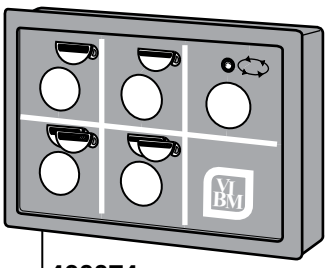

460074 KOMETA
PULSANTIERA - TOUCH PAD

VIBIEMME

DOMOBAR SUPER

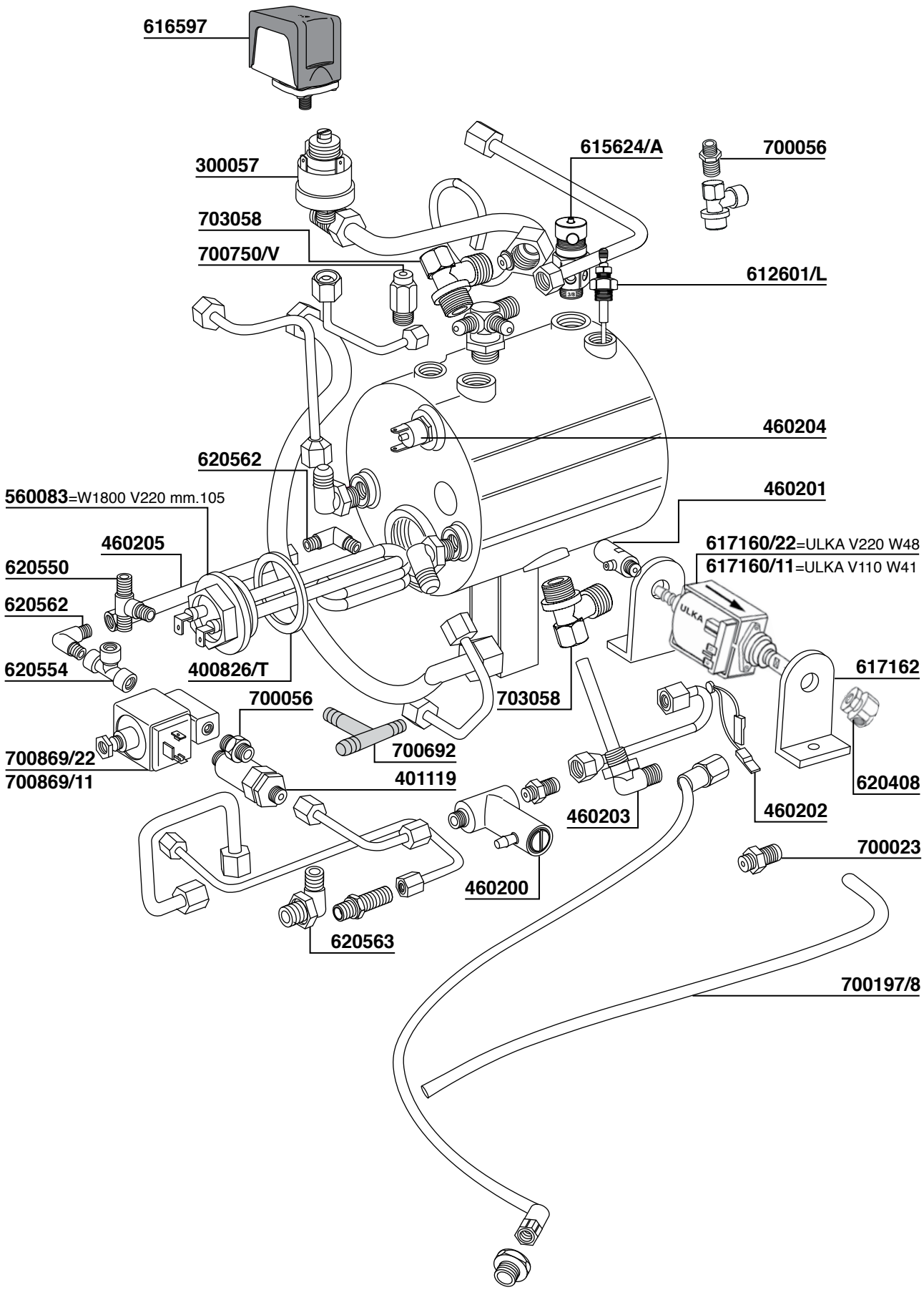

DOMOBAR SUPER

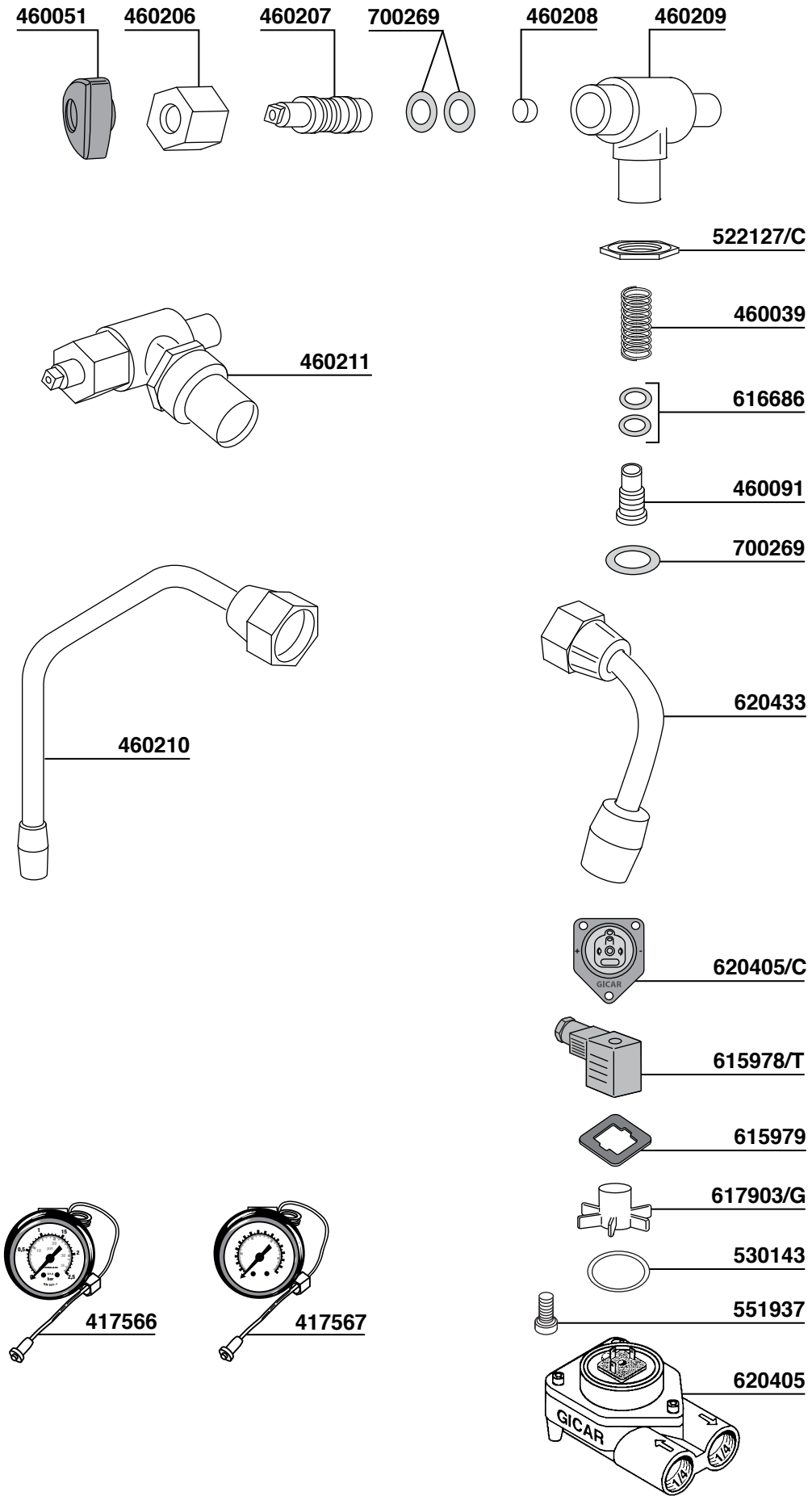

DOMOBAR CALDAIA VERTICALE

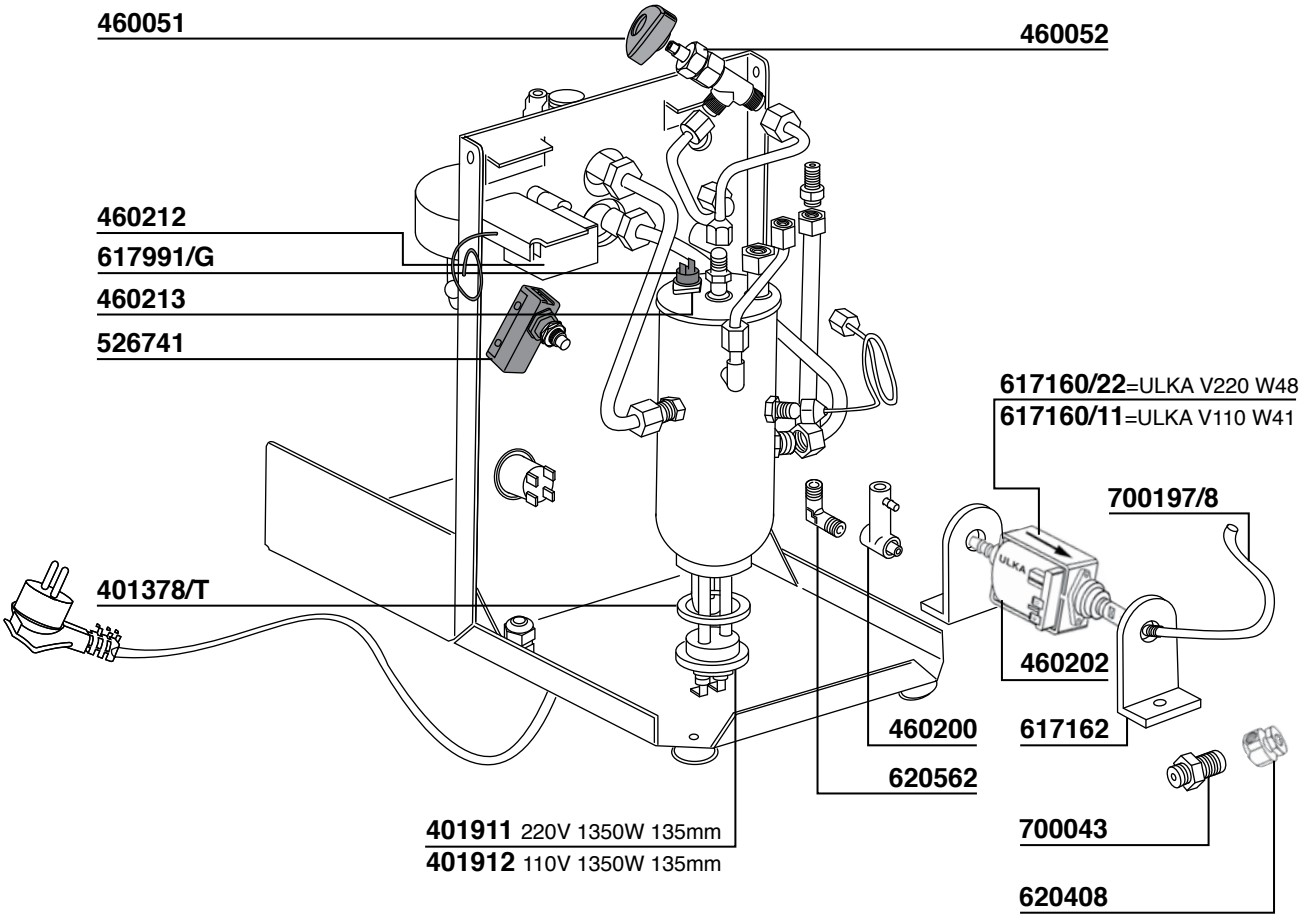

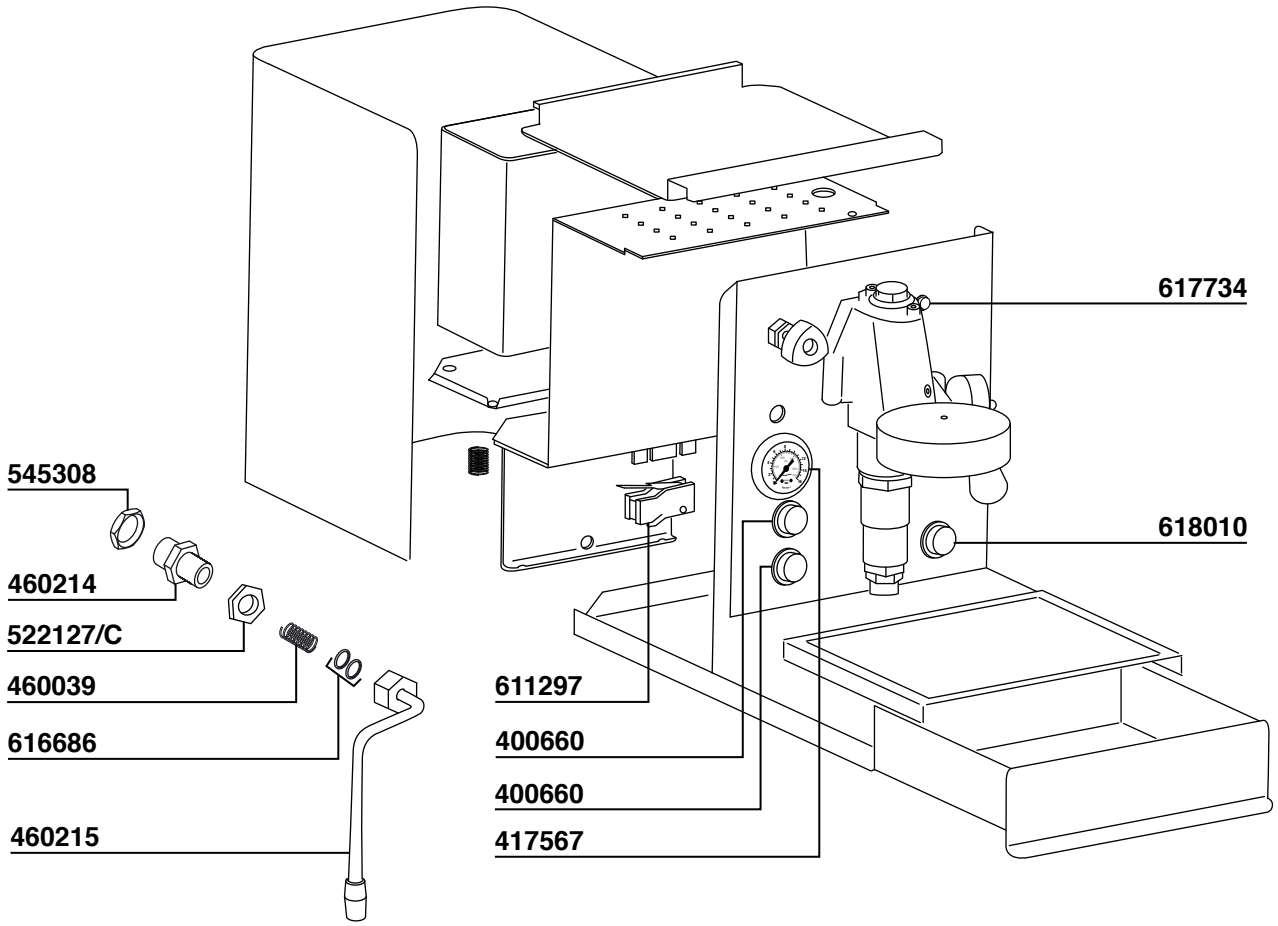

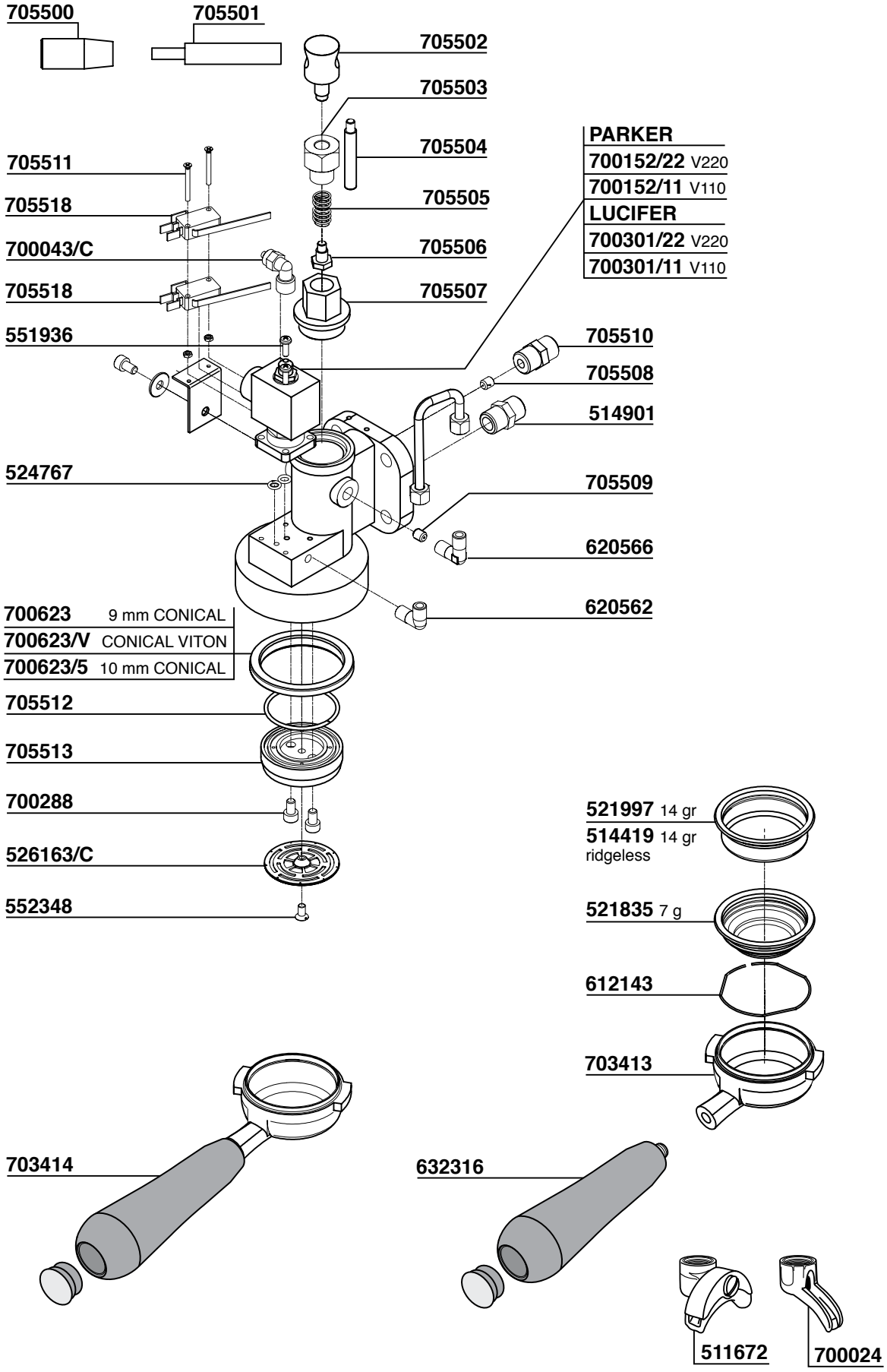
705500
705501
705502
705503
705504
705505
705506
705507
705511
705518
700043/C
705518
551936
PARKER
700152/22 V220
700152/11 V110
LUCIFER
700301/22 V220
700301/11 V110
705510
705508
514901
524767
705509
620566
620562
700623 9 mm CONICAL
700623/V CONICAL VITON
700623/5 10 mm CONICAL
705512
705513
700288
526163/C
552348
521997 14 gr
514419 14 gr
ridgeless
521835 7 g
612143
703413
703414
632316
511672
700024

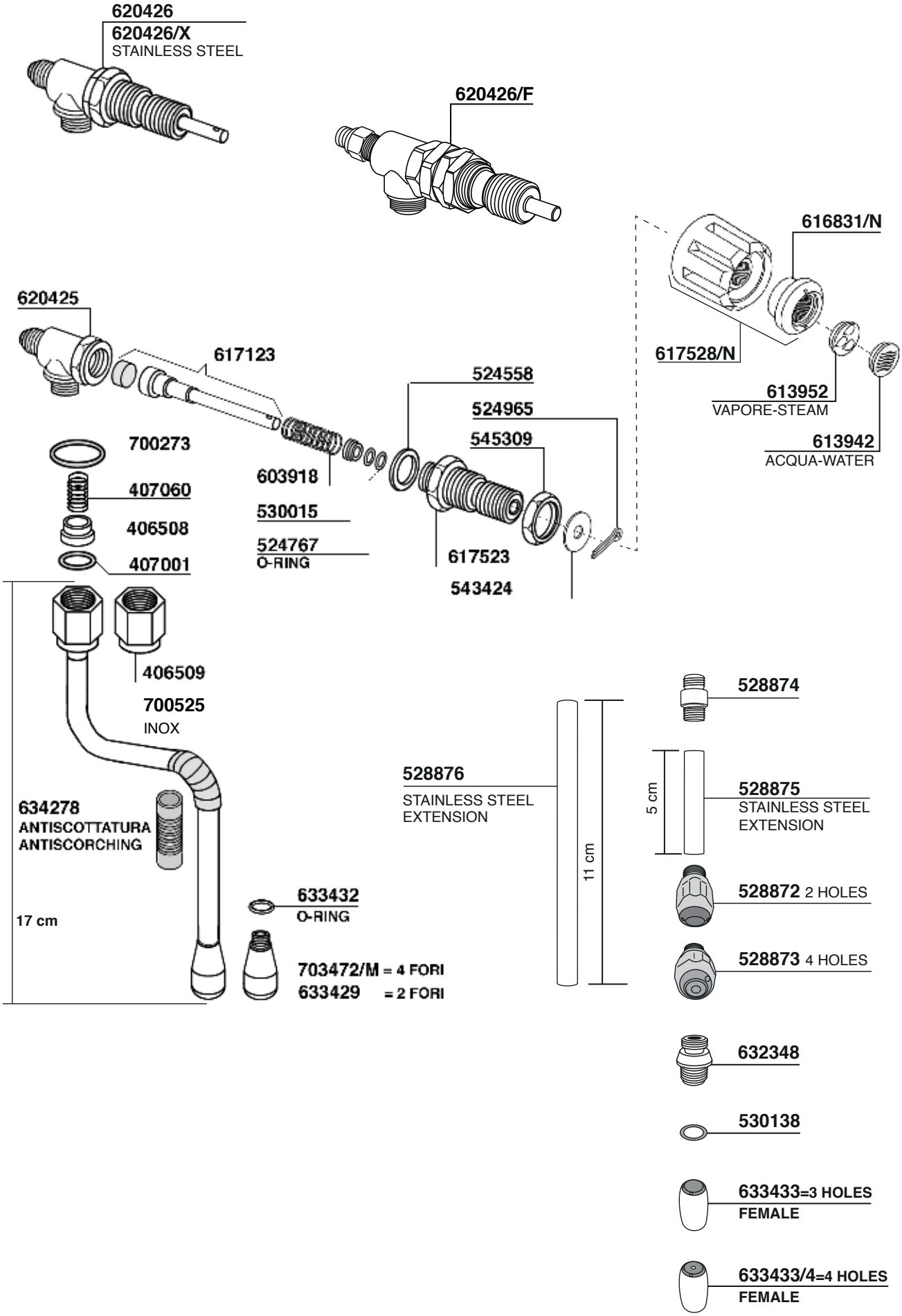
620426
620426/X
STAINLESS STEEL
620426/F
616831/N
620425
617123
617528/N
524558
613952
VAPORE-STEAM
524965
613942
ACQUA-WATER
545309
700273
603918
407060
530015
406508
524767
O-RING
407001
617523
543424
406509
700525
INOX
528874
528876
STAINLESS STEEL
EXTENSION
5 cm
528875
STAINLESS STEEL
EXTENSION
634278
ANTISCOTTATURA
ANTISCORCHING
11 cm
528872 2 HOLES
633432
O-RING
17 cm
528873 4 HOLES
703472/M = 4 FORI
633429 = 2 FORI
632348
530138
633433=3 HOLES
FEMALE
633433/4=4 HOLES
FEMALE

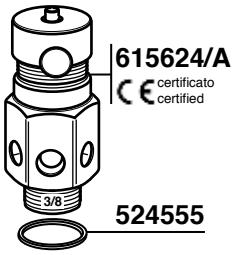

615624/A
CE certificato certified

524555

618968

524554

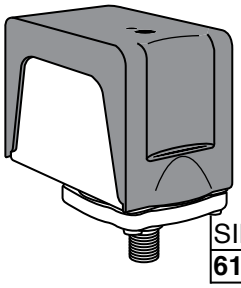

SIRAI
616597 CE/UL

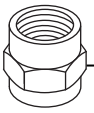

620411=3/8F

524555

617991

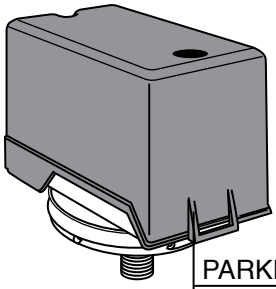

PARKER
616599 CE/UL

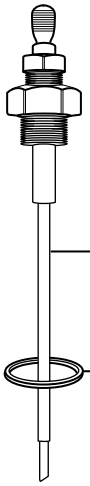

612601/L 140mm

524554

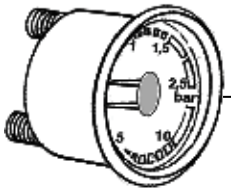

700874

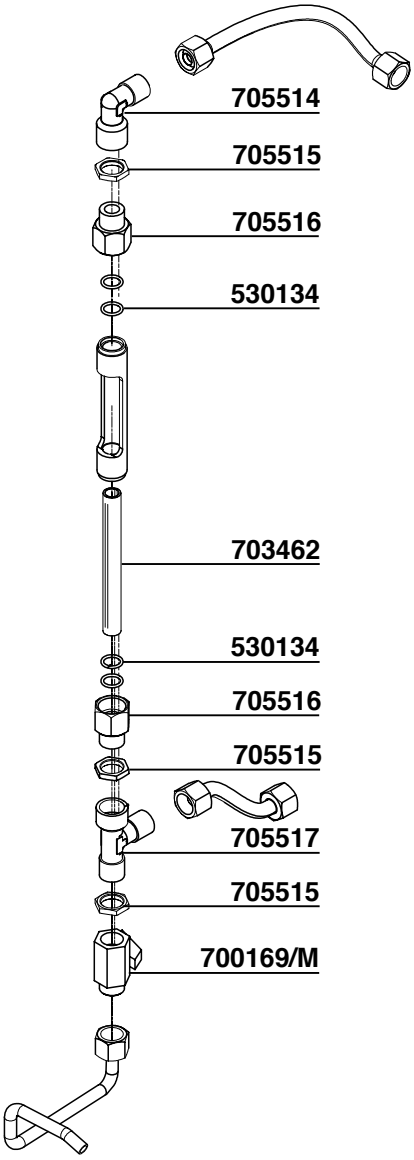

705514

705515

705516

530134

703462

530134

705516

705515

705517

705515

700169/M

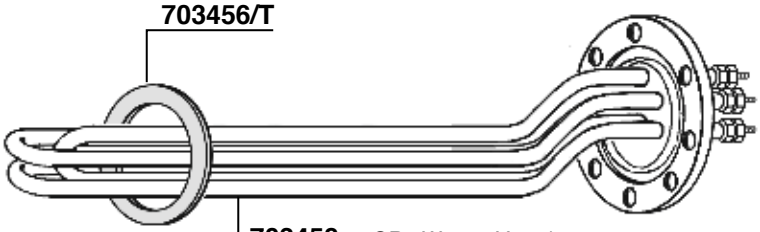

703456/T

703458 = GR2 W3000 V220/380 mm.340

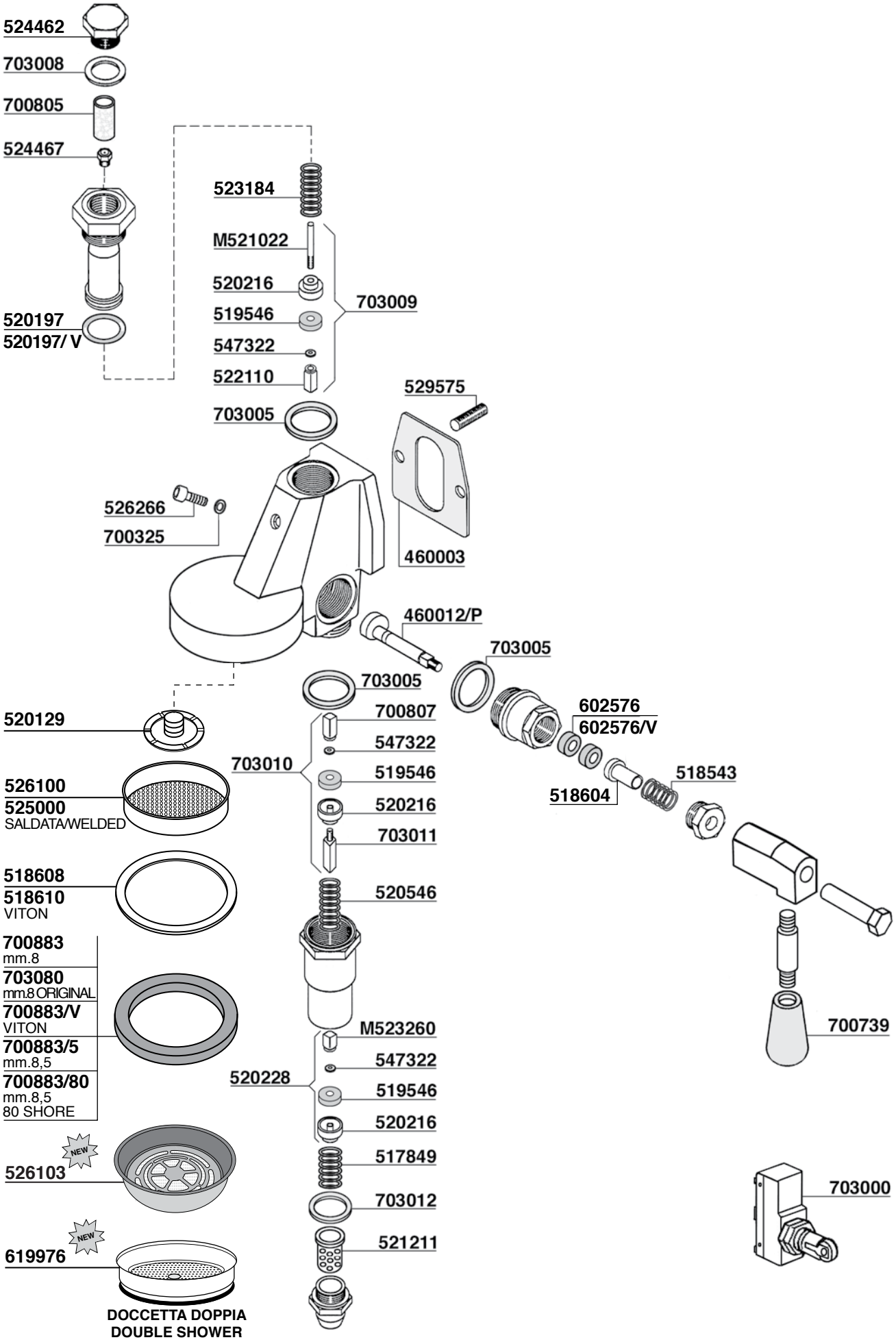
524462
703008
700805
524467
523184
M521022
520216
519546
547322
522110
703009
520197
520197/ V
529575
703005
526266
700325
460003
460012/P
703005
703005
602576
602576/V
700807
547322
703010
519546
520216
703011
518543
518604
520129
526100
525000
SALDATA/WELDED
518608
518610
VITON
520546
700883
mm.8
703080
mm.8 ORIGINAL
700883/V
VITON
700883/5
mm.8,5
700883/80
mm.8,5
80 SHORE
M523260
547322
520228
519546
520216
517849
703012
521211
700739
NEW
526103
703000
NEW
619976
DOCCETTA DOPPIA
DOUBLE SHOWER

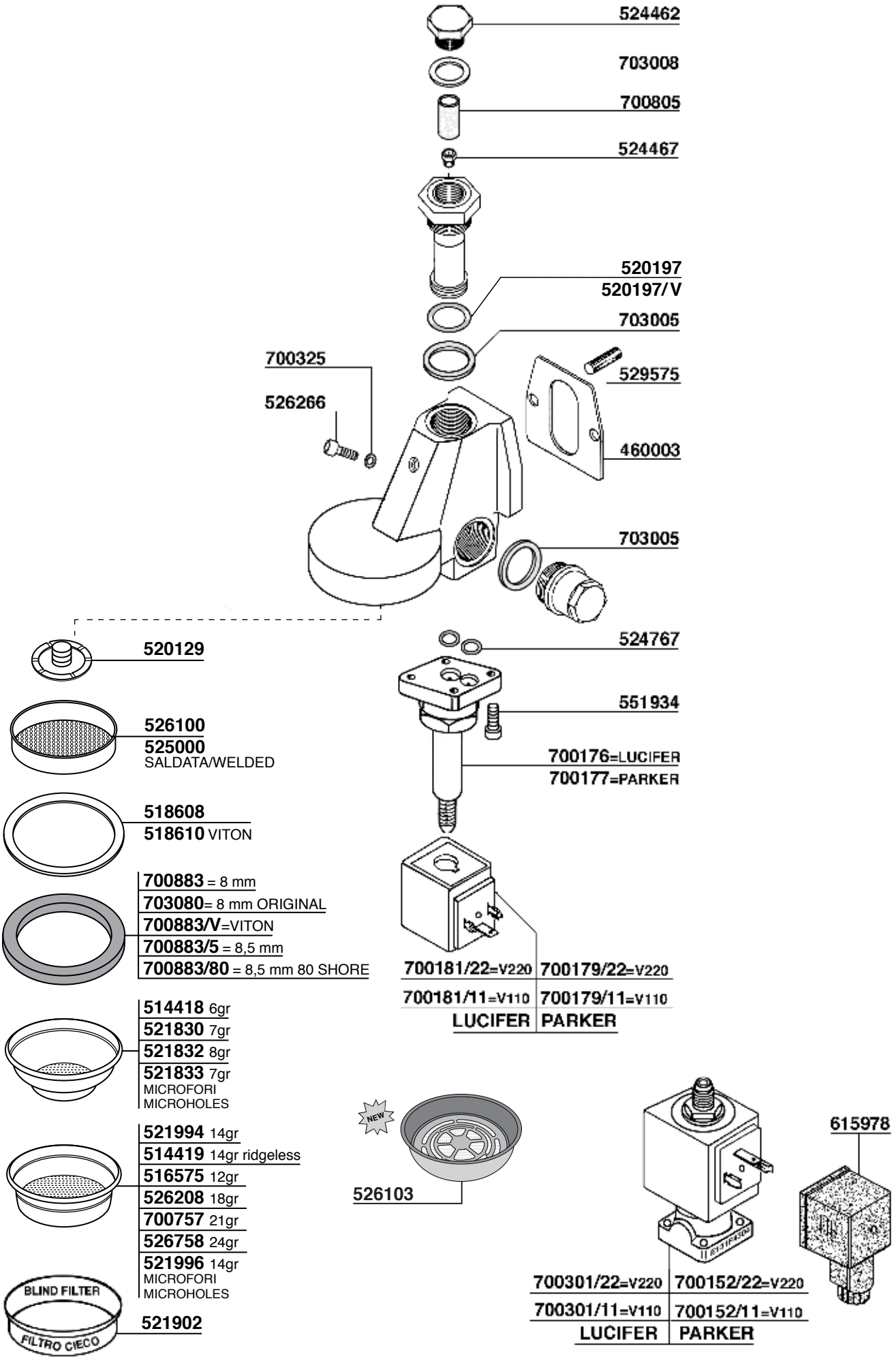
524462
703008
700805
524467
520197
520197/V
703005
700325
526266
529575
460003
703005
520129
524767
551934
526100
525000
SALDATA/WELDED
700176=LUCIFER
700177=PARKER
518608
518610 VITON
700883 = 8 mm
703080= 8 mm ORIGINAL
700883/V=VITON
700883/5 = 8,5 mm
700883/80 = 8,5 mm 80 SHORE
700181/22=V220
700179/22=V220
700181/11=V110
700179/11=V110
LUCIFER
PARKER
514418 6gr
521830 7gr
521832 8gr
521833 7gr
MICROFORI
MICROHOLES
NEW
526103
521994 14gr
514419 14gr ridgeless
516575 12gr
526208 18gr
700757 21gr
526758 24gr
521996 14gr
MICROFORI
MICROHOLES
615978
BLIND FILTER
FILTRO CIECO
521902
700301/22=V220
700152/22=V220
700301/11=V110
700152/11=V110
LUCIFER
PARKER

VENERE

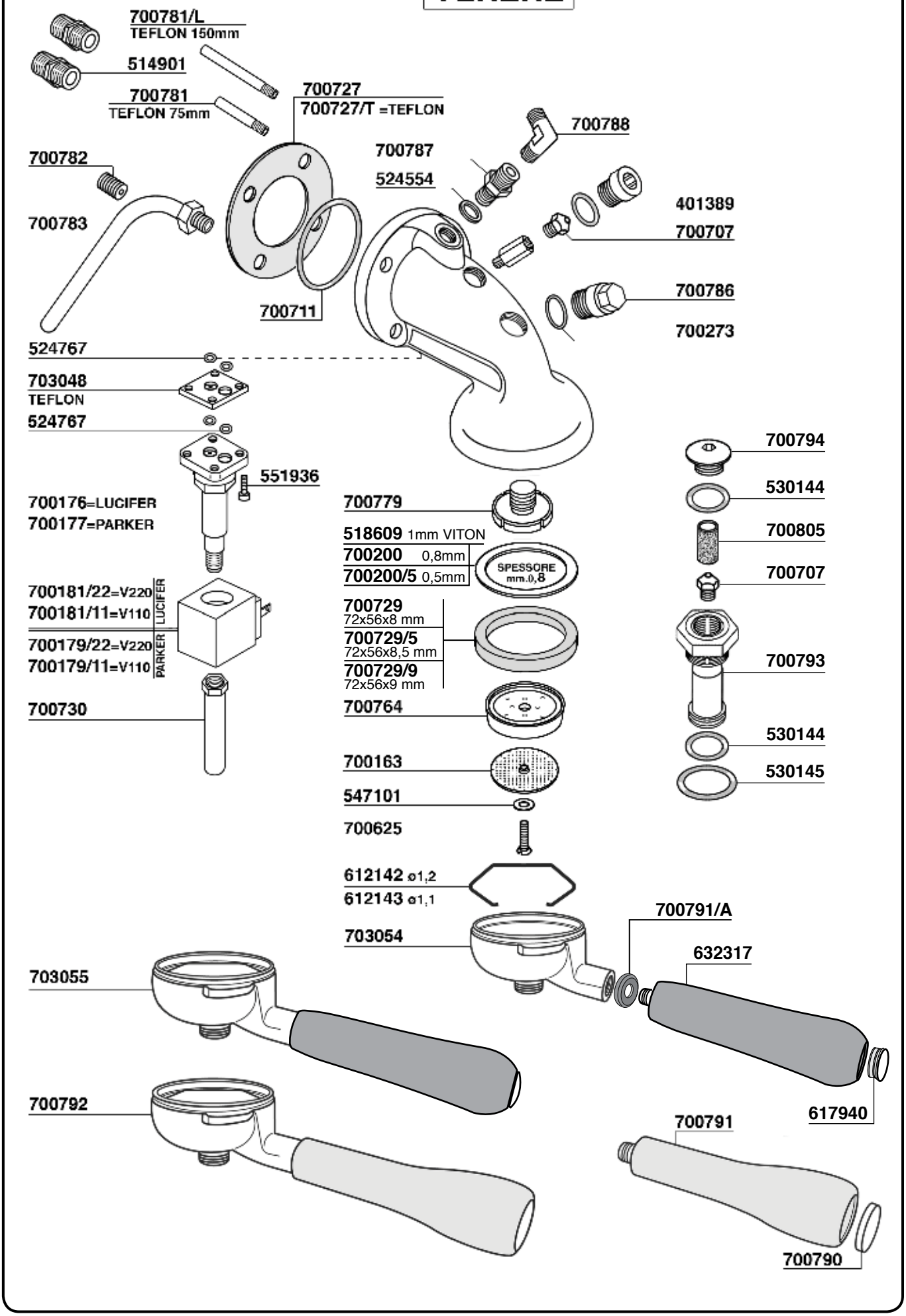
700781/L
TEFLON 150mm
514901
700781
TEFLON 75mm
700727
700727/T =TEFLON
700788
700787
524554
700782
700783
401389
700707
700786
700711
700273
524767
703048
TEFLON
524767
551936
700794
530144
700176=LUCIFER
700177=PARKER
700779
518609 1mm VITON
700200 0,8mm
700200/5 0,5mm
SPESSORE mm.0,8
700805
700707
700181/22=V220
700181/11=V110
LUCIFER
700179/22=V220
700179/11=V110
PARKER
700729
72x56x8 mm
700729/5
72x56x8,5 mm
700729/9
72x56x9 mm
700793
700730
700764
530144
700163
530145
547101
700625
612142 ø1,2
612143 ø1,1
700791/A
703054
632317
703055
617940
700792
700791
700790

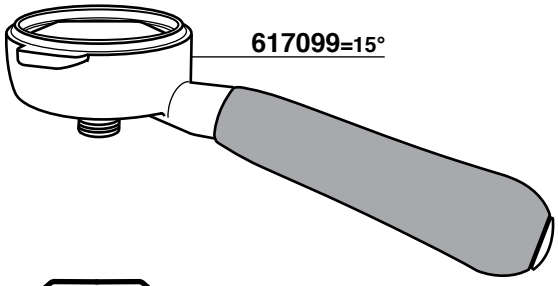
617099=15°

612143 ø 1,1
612142 ø 1,2

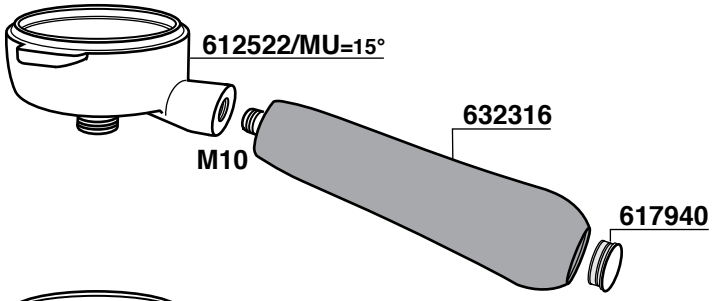
612522/MU=15°
632316
M10
617940

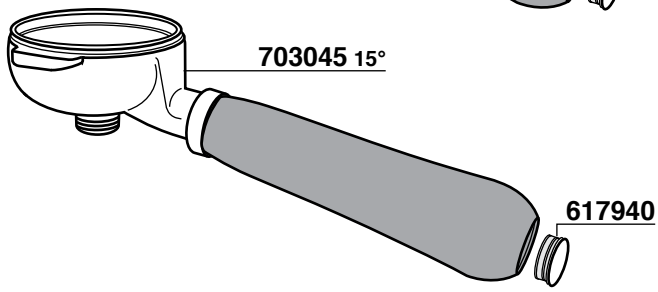
703045 15°
617940

612143 ø 1,1
612142 ø 1,2

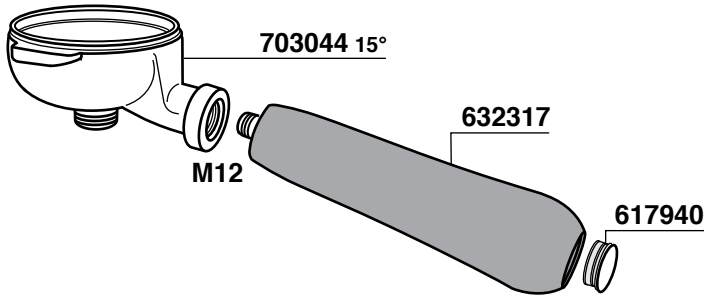
703044 15°
632317
M12
617940

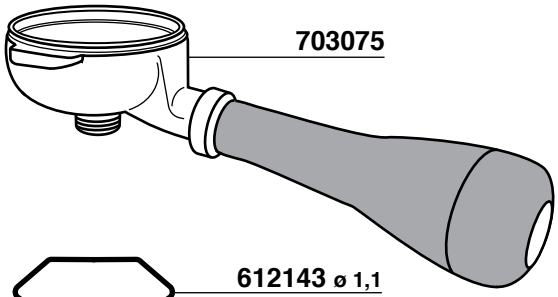
703075

612143 ø 1,1
612142 ø 1,2

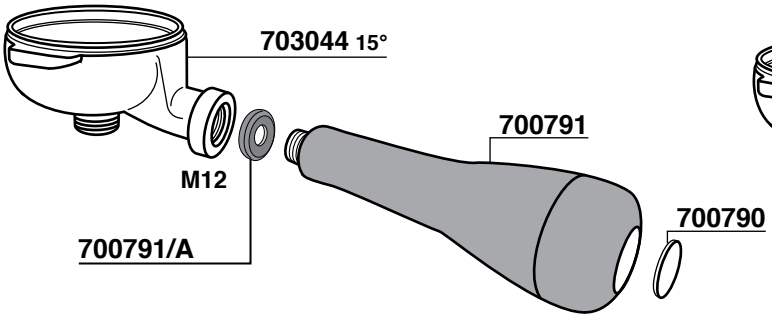
703044 15°
700791
M12
700791/A
700790

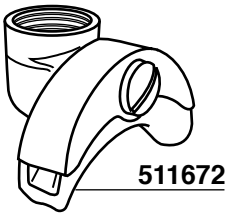
511672

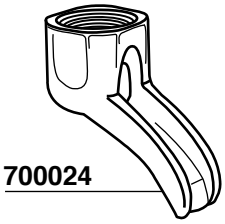
700024

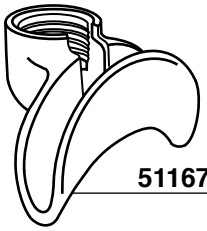
511674

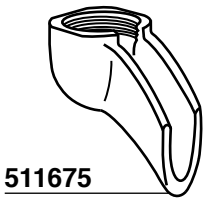
511675

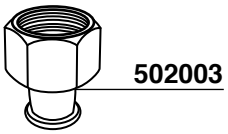
502003

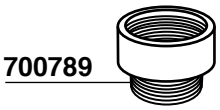
700789

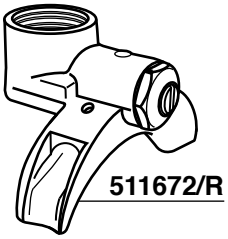
511672/R

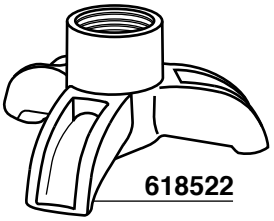
618522

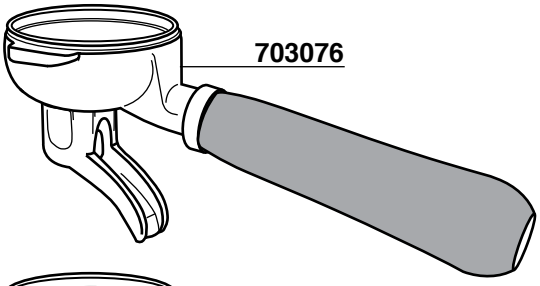
703076

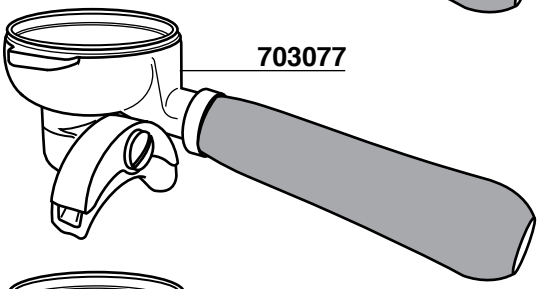
703077

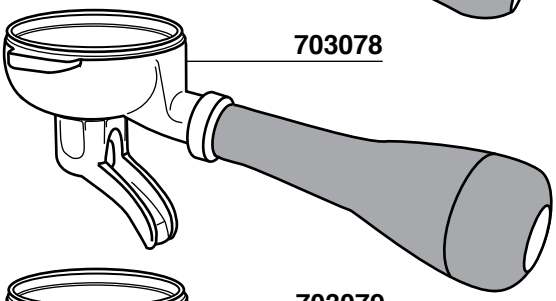
703078

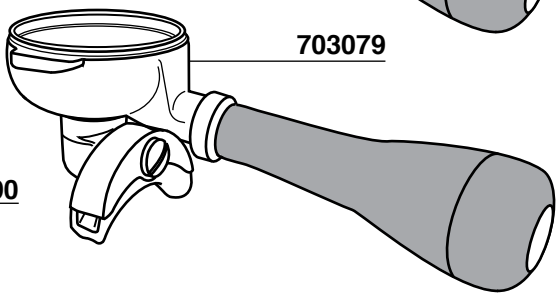
703079

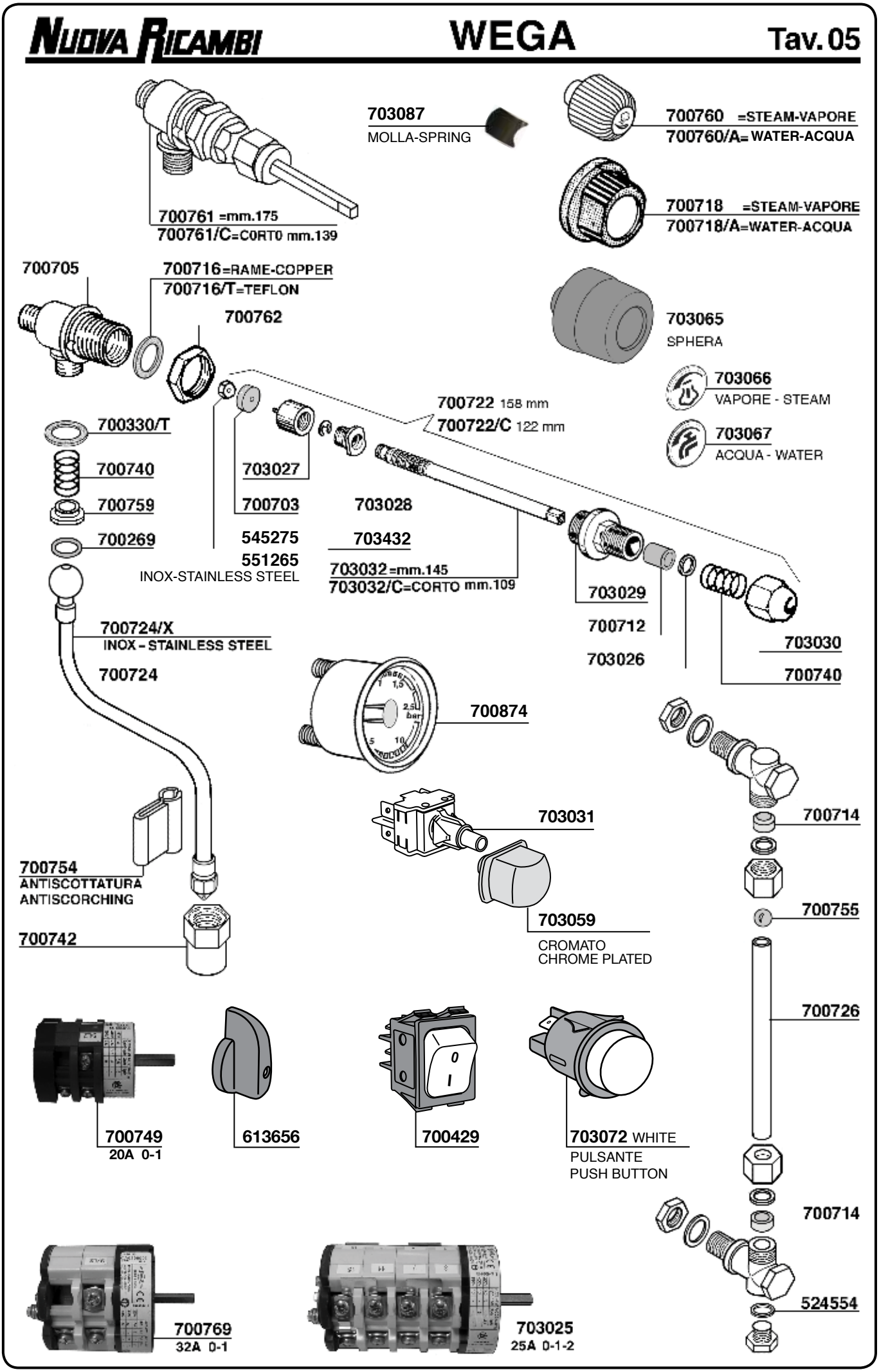
700761 =mm.175
700761/C=CORTO mm.139
703087
MOLLA-SPRING
700760 =STEAM-VAPORE
700760/A= WATER-ACQUA
700718 =STEAM-VAPORE
700718/A=WATER-ACQUA
700705
700716=RAME-COPPER
700716/T=TEFLON
700762
703065
SPHERA
703066
VAPORE - STEAM
703067
ACQUA - WATER
700722 158 mm
700722/C 122 mm
700330/T
700740
700759
700269
703027
700703
703028
545275
551265
INOX-STAINLESS STEEL
703432
703032 =mm.145
703032/C=CORTO mm.109
703029
700712
703026
703030
700740
700724/X
INOX - STAINLESS STEEL
700724
700874
703031
700714
700754
ANTISCOTTATURA
ANTISCORCHING
703059
CROMATO
CHROME PLATED
700755
700742
700726
700749
20A 0-1
613656
700429
703072 WHITE
PULSANTE
PUSH BUTTON
700714
524554
700769
32A 0-1
703025
25A 0-1-2

618968

524554

700750

524554

618970

615624/A
certificato
certified

524555

700217

524555

618969
ø 8

524554

620579/2

524554

703058

524552/R

524555

703068

514901

524555

524554

542794 M10X40

501652
501652/T TEFLON

529575

700715
700715/T=TEFLON

703058

524554

703014

6 POLI

703001 GR1 2000W 220/380V mm. 170
703001/11 GR1 2000W 110V mm. 170
703002 GR2 3000W 220/380V mm. 290
703003 GR3 3700W 220/380V mm.570
703069 GR2 4500W 220/380V mm. 310
703004 GR3/4 5000W 220/380V mm. 570

4 POLI

700731/22 GR1 2000W 220V mm. 160
700731/11 GR1 1700W 110V mm. 175
700732/22 GR2 2600W 220V mm. 305
700778 GR3 3700W 220V mm. 515
633092 GR3-4 6500W 220V mm. 500

400826/T

mm 95

MINIWEGA
703020 1500W 220V mm.95
703020/11 1300W 110V mm.95

mm 105

501652/T

703022 = w1500 220V mm. 105
703022/11 = w1500 110V mm. 105

612601 120mm
612601/L 140mm

524554

592002
Ø40L=282mmGR/2

616597 CE/UL

703013

592003
Ø40L=502mm GR/3

MOTORE RAFFREDDATO AD ACQUA - MOTOR WATERCOOL

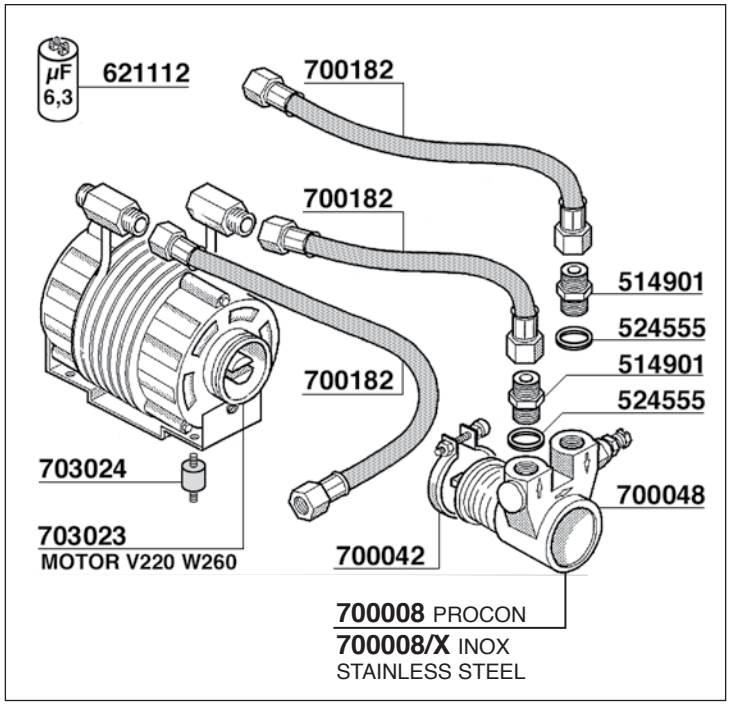

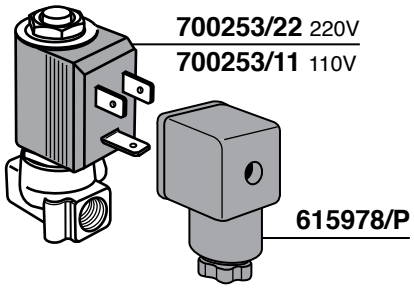

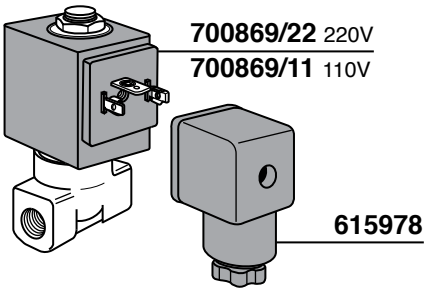

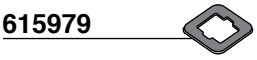

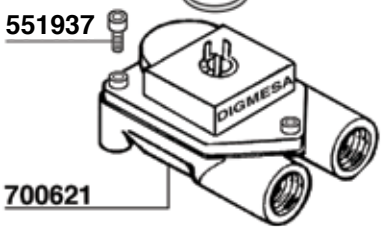

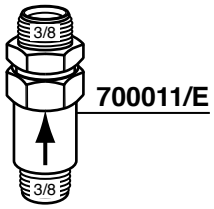

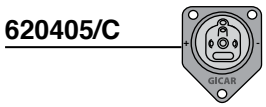

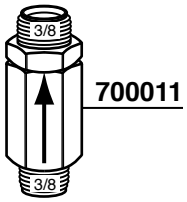

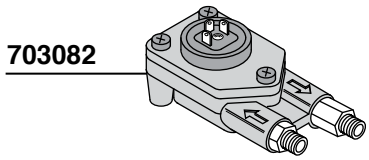

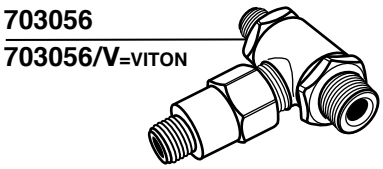

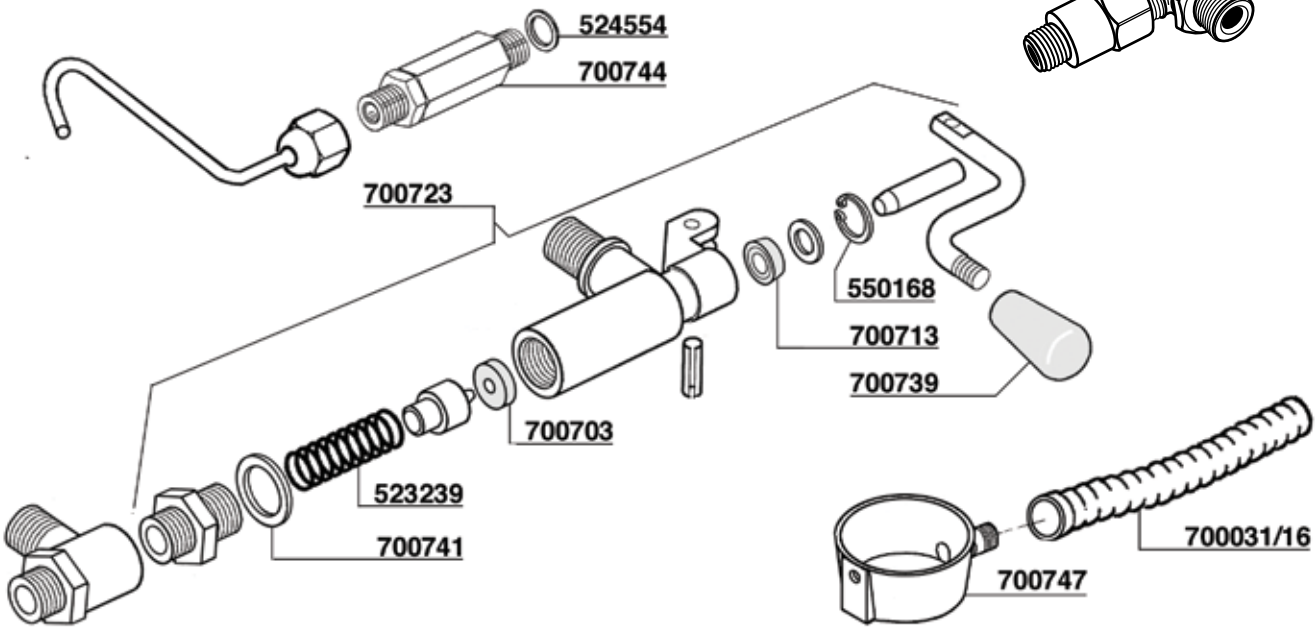

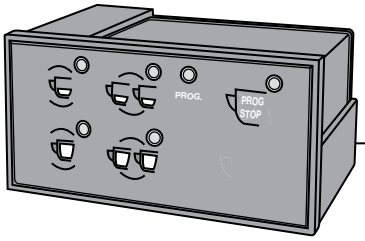

703015

PULSANTIERA + CENTRALINA
TOUCHPAD + ELECTRONIC BOX

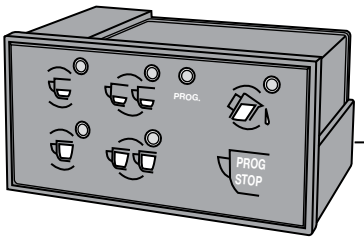

703016

PULSANTIERA
TOUCHPAD

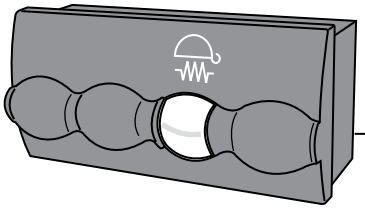

703060
SPHERA

PULSANTIERA SCALDATAZZE
CUP WARMER TOUCHPAD

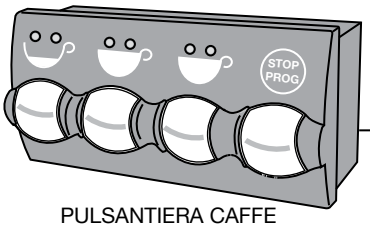

703061
SPHERA EVD

PULSANTIERA CAFFE
COFFEE TOUCHPAD

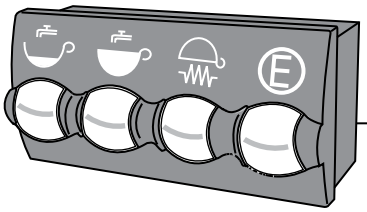

703062
SPHERA

PULSANTIERA SERVIZI
SERVICE TOUCHPAD

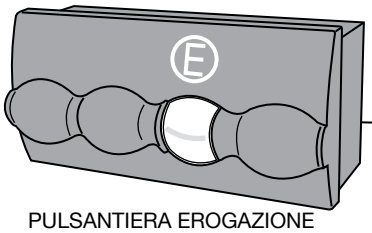

703064
SPHERA

PULSANTIERA EROGAZIONE
1 BREW TOUCHPAD

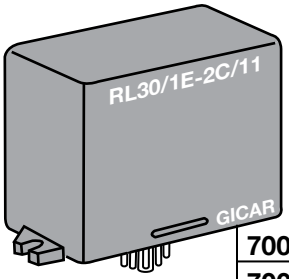

700574 220V
700574/11 110V

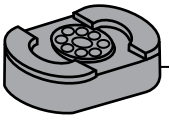

401920

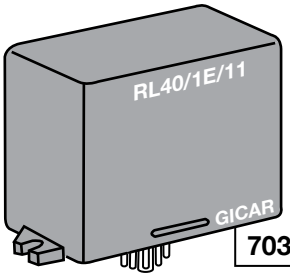

703017 220V

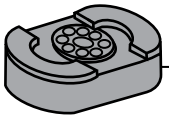

401920

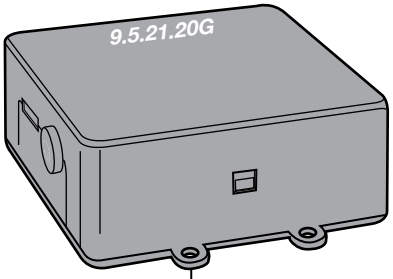

703073

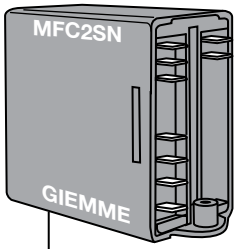

703018 V220
MINIWEGA

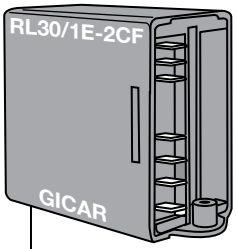

700737 V220
700737/11 V110
703063 WITH TIME OUT

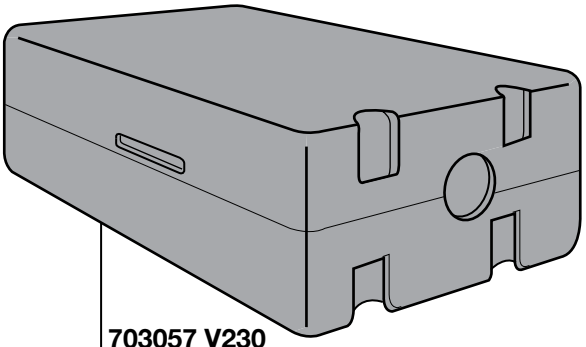

703057 V230
703057/11 V110
CENTRALINA SPHERA EVD GR1-2-3
ELECTRONIC BOX SPHERA EVD GR1-2-3

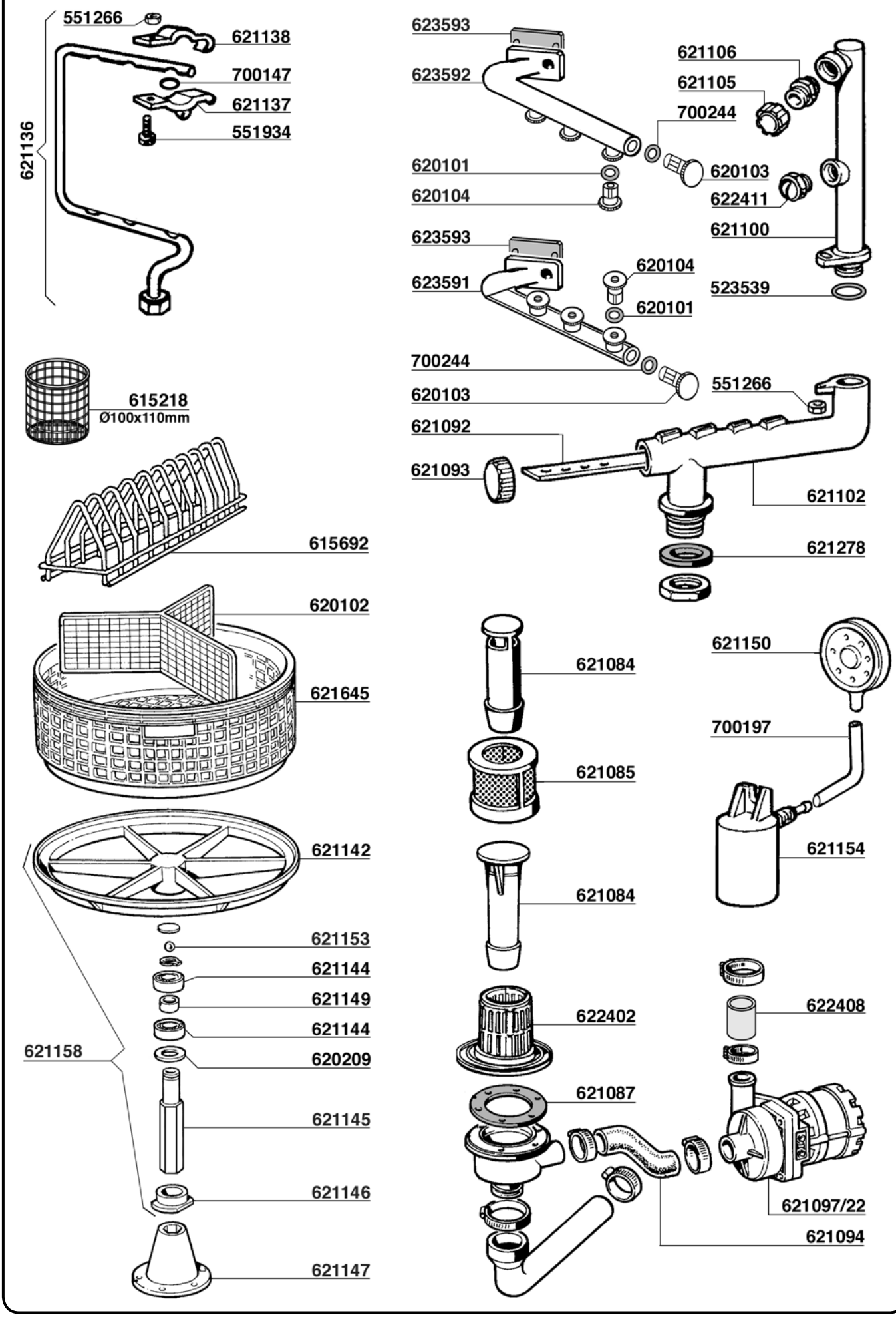
551266
621138
700147
621137
551934
621136
615218
Ø100x110mm
615692
620102
621645
621142
621153
621144
621149
621144
621158
620209
621145
621146
621147
623593
623592
621106
621105
700244
620101
620103
620104
622411
621100
623593
620104
623591
523539
620101
700244
551266
620103
621092
621093
621102
621278
621084
621150
700197
621085
621154
621084
622402
622408
621087
621097/22
621094

NUOVA RICAMBI COMENDA-FAEMA Tav. 02

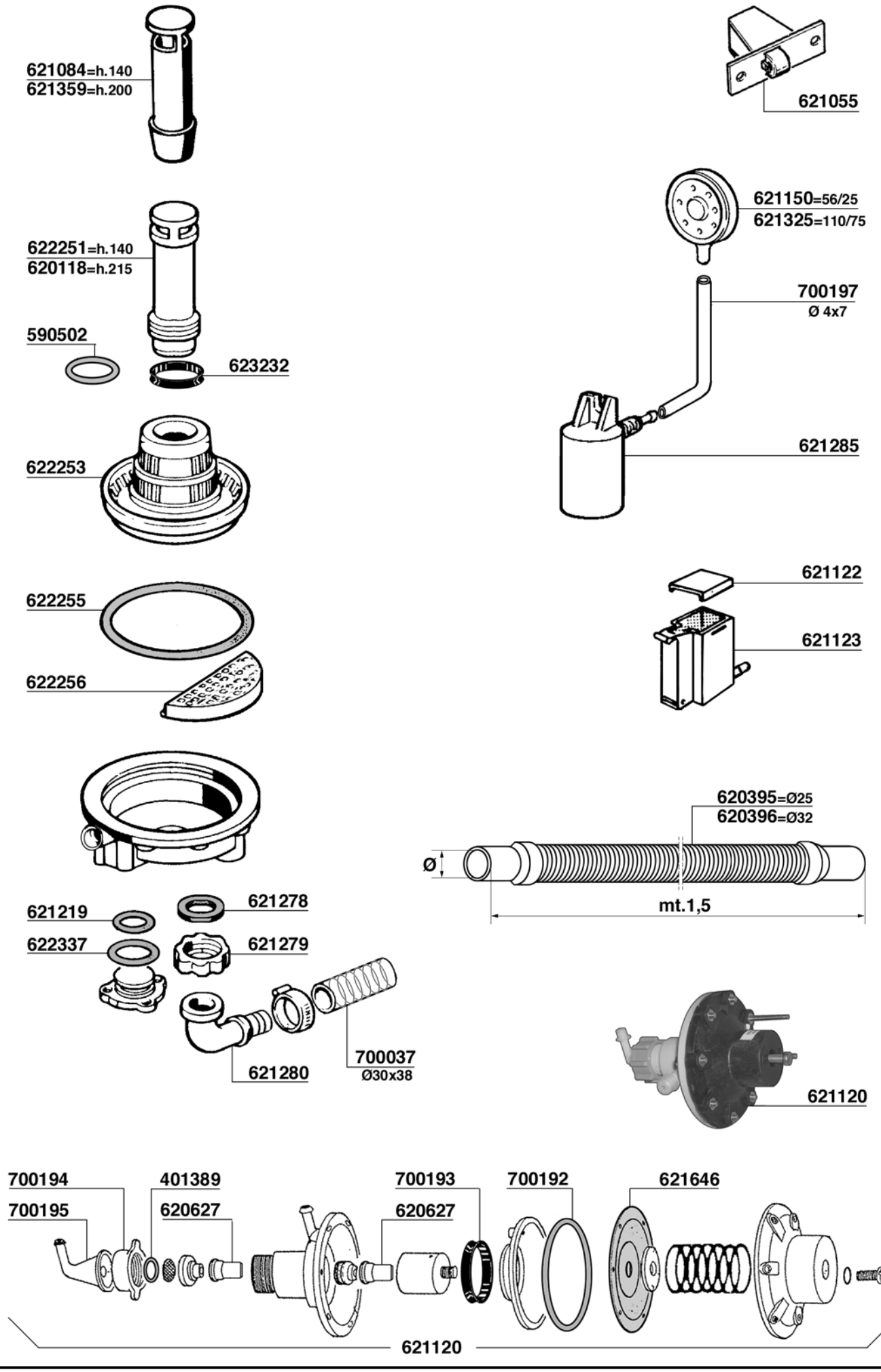

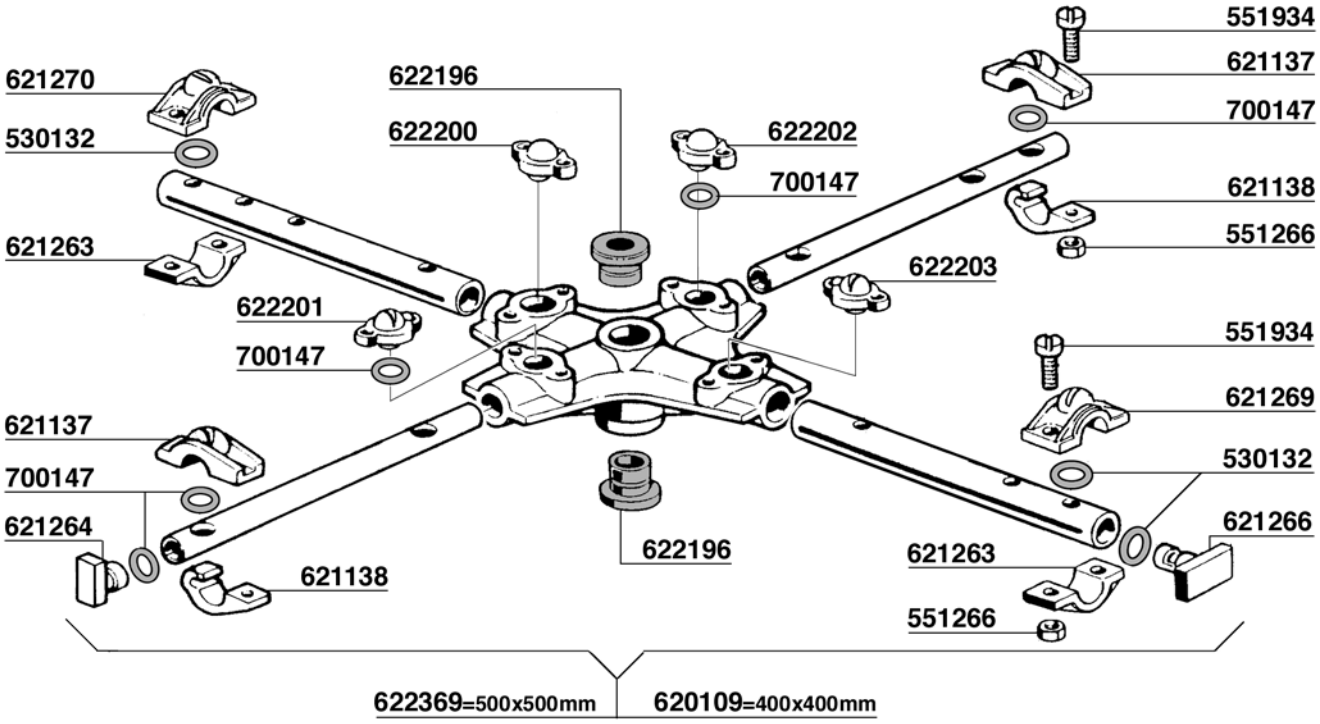
551934
621137
700147
621270
530132
622196
622200
622202
700147
621138
551266
621263
622203
622201
700147
551934
621269
621137
700147
530132
621264
621266
622196
621263
621138
551266
622369=500x500mm
620109=400x400mm

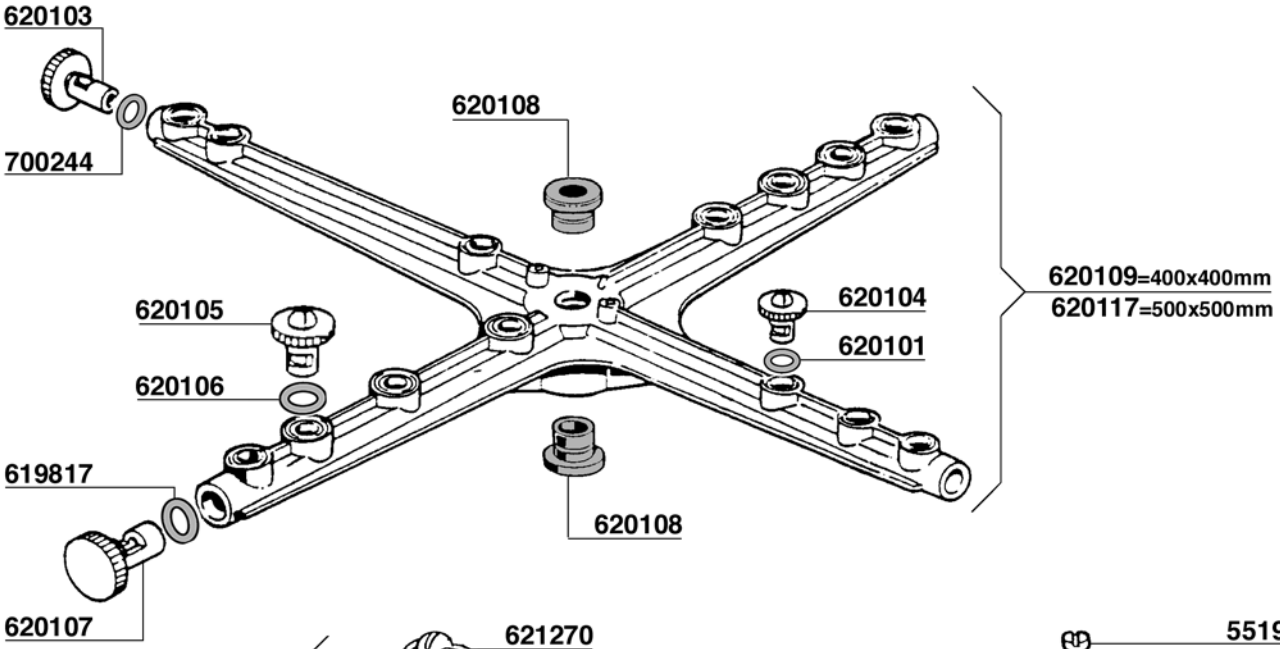
620103
620108
700244
620109=400x400mm
620117=500x500mm
620105
620104
620101
620106
619817
620108
620107

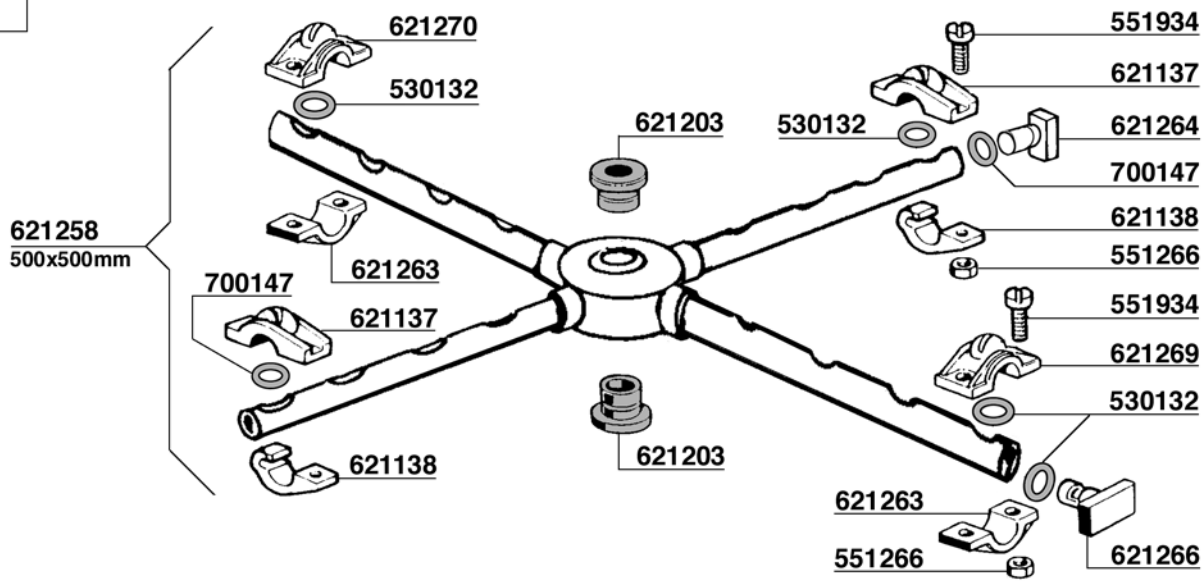
621270
551934
530132
621137
621203
530132
621264
700147
621258
500x500mm
621138
621263
551266
700147
621137
551934
621269
530132
621138
621203
621263
551266
621266

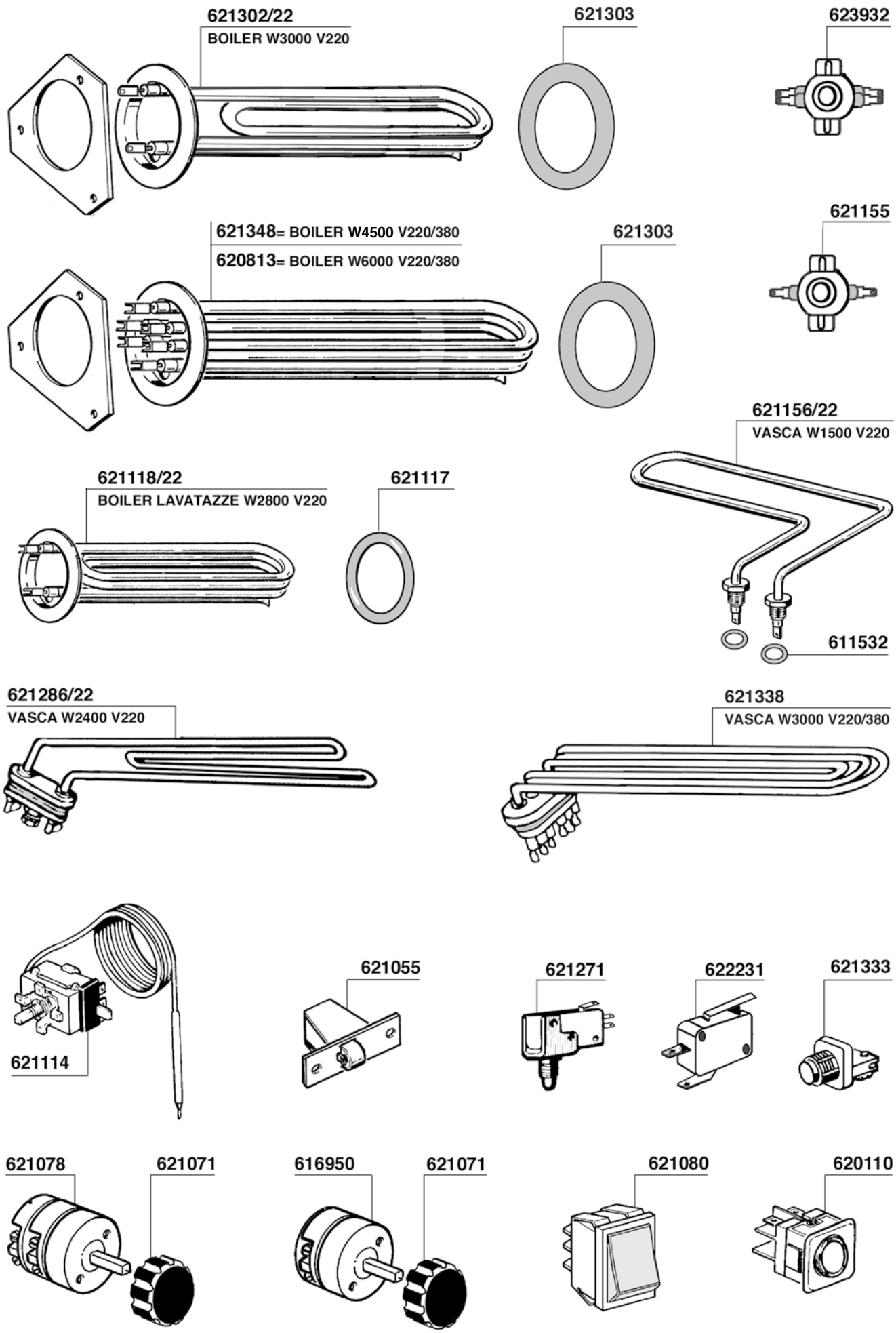
621302/22
BOILER W3000 V220
621303
623932
621348= BOILER W4500 V220/380
620813= BOILER W6000 V220/380
621303
621155
621156/22
VASCA W1500 V220
621118/22
BOILER LAVATAZZE W2800 V220
621117
611532
621286/22
VASCA W2400 V220
621338
VASCA W3000 V220/380
621114
621055
621271
622231
621333
621078
621071
616950
621071
621080
620110

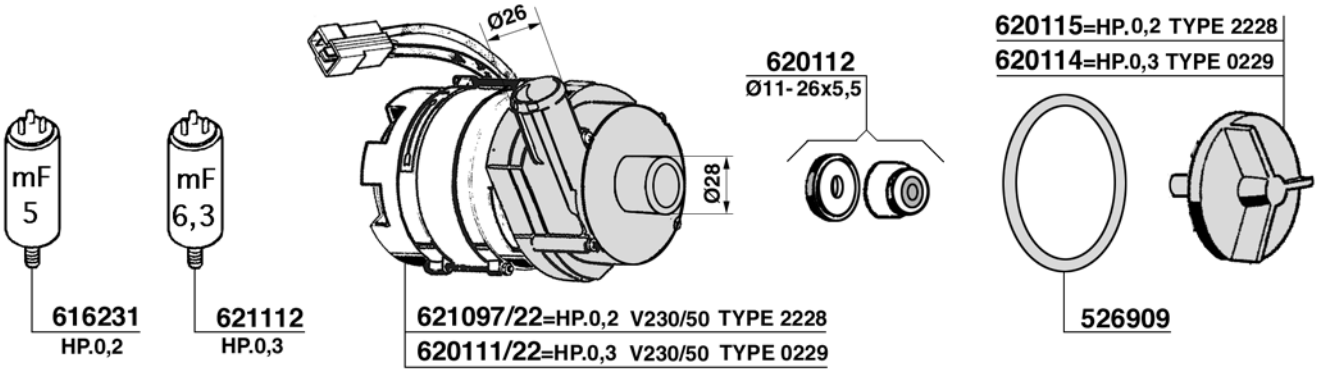
mF 5
mF 6,3
Ø26
Ø28
620112
Ø11- 26x5,5
620115=HP.0,2 TYPE 2228
620114=HP.0,3 TYPE 0229
616231
HP.0,2
621112
HP.0,3
621097/22=HP.0,2 V230/50 TYPE 2228
620111/22=HP.0,3 V230/50 TYPE 0229
526909

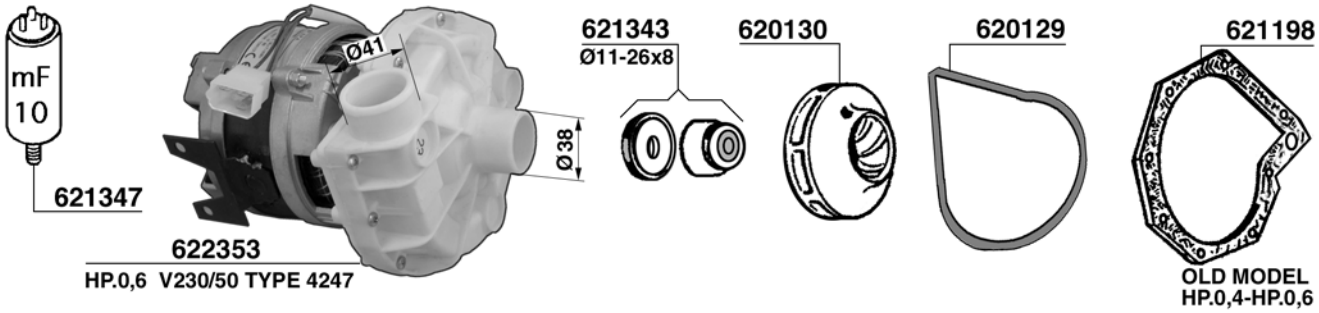
mF 10
621347
Ø41
Ø38
621343
Ø11-26x8
620130
620129
621198
622353
HP.0,6 V230/50 TYPE 4247
OLD MODEL
HP.0,4-HP.0,6

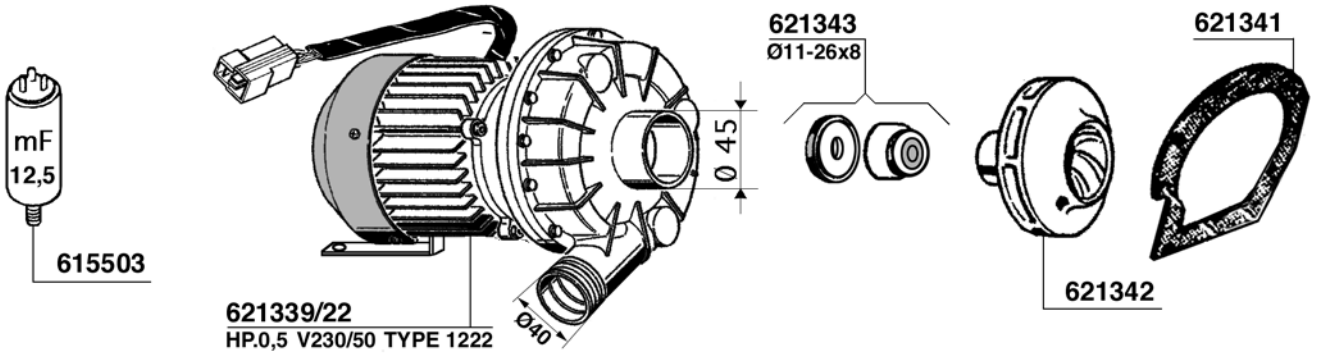
mF 12,5
615503
Ø 45
Ø40
621343
Ø11-26x8
621341
621342
621339/22
HP.0,5 V230/50 TYPE 1222

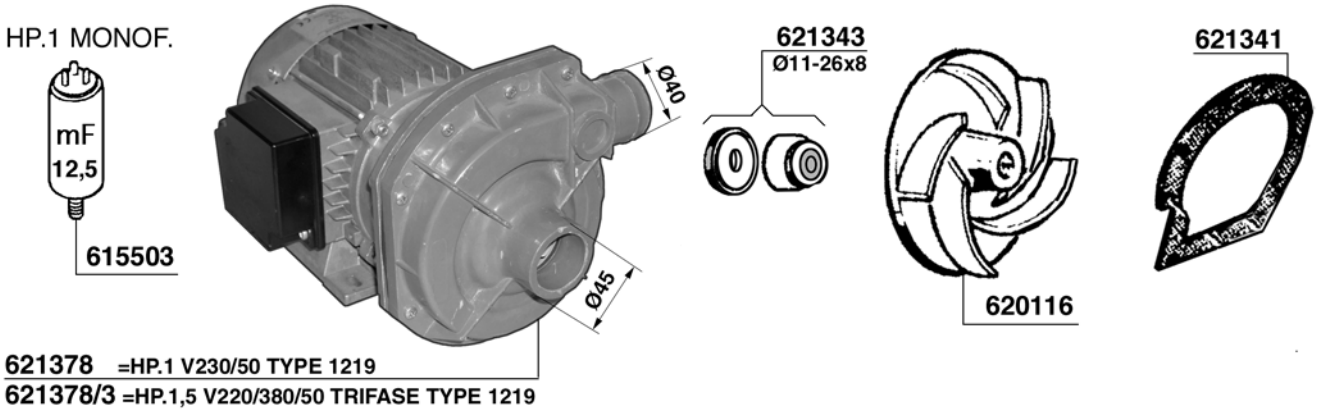
HP.1 MONOF.
mF 12,5
615503
Ø40
Ø45
621343
Ø11-26x8
621341
620116
621378 =HP.1 V230/50 TYPE 1219
621378/3 =HP.1,5 V220/380/50 TRIFASE TYPE 1219

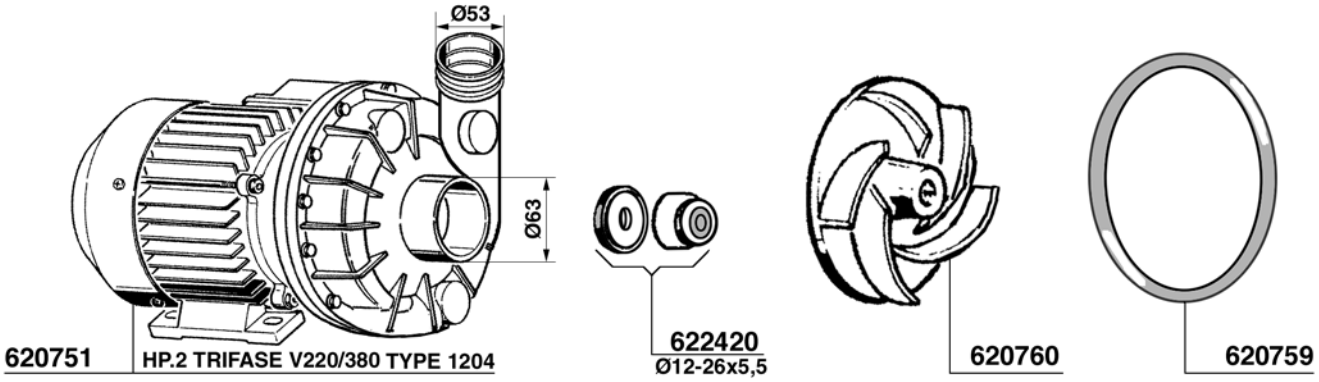
Ø53
Ø63
620751
HP.2 TRIFASE V220/380 TYPE 1204
622420
Ø12-26x5,5
620760
620759

621129

621317

615163

615149

621758

700129

700609=1,5LT/M
700612=0,7LT/M

621074

2 CAMME 120"

621071

615800

3 CAMME 120"

621353

3 CAMME 210"

621071

623254

3 CAMME 120"

621324

3 CAMME 180"

621082

4 CAMME 20'

620119

4 CAMME 120"

PERISTALTIC PUMP WITH
DOSED QUANT.ADJUSTED

POMPA PERISTALTICA
A DOSE REGOLABILE

620126

620121

SEKO PBR 03
FOR DETERGENT
PER DETERGENTE

620127

620123

SEKO PBR 0,4
FOR SHINER
PER BRILLANTANTE

560050

PVC Ø4x6

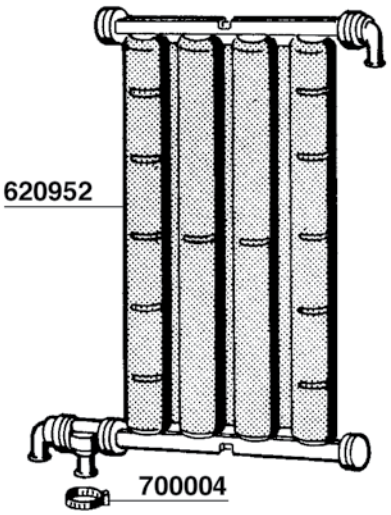

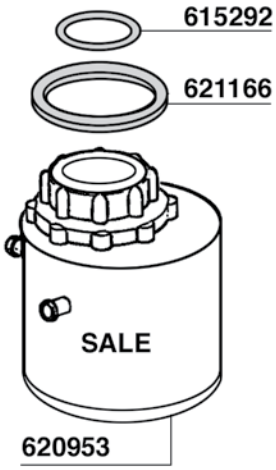

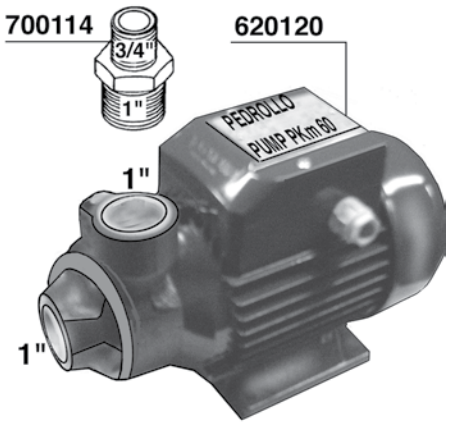

POMPA AUSILIARIA RISCIACQUO
RINSE BOSTER PUMP
l/min. 5 ÷ 40 H 5 ÷ 38 mt
HP 0,5 V220/230

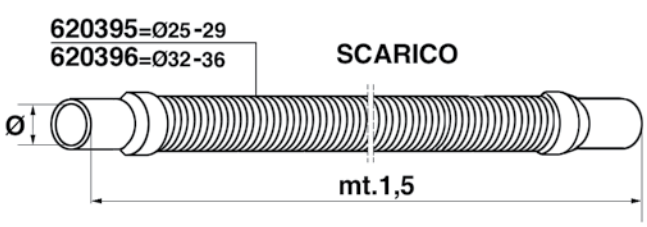

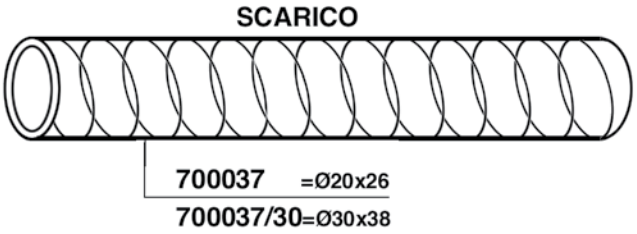

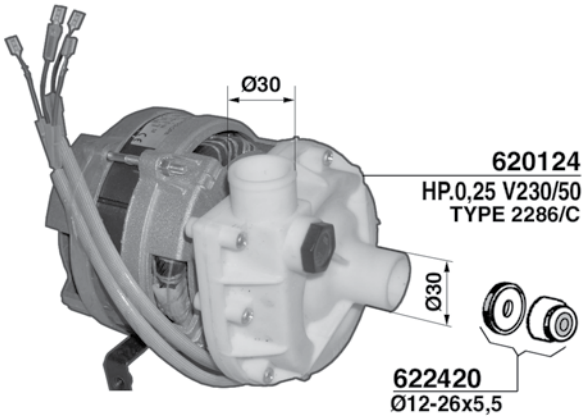

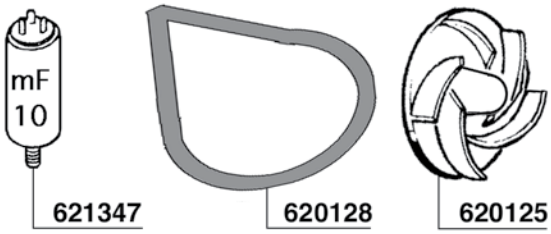

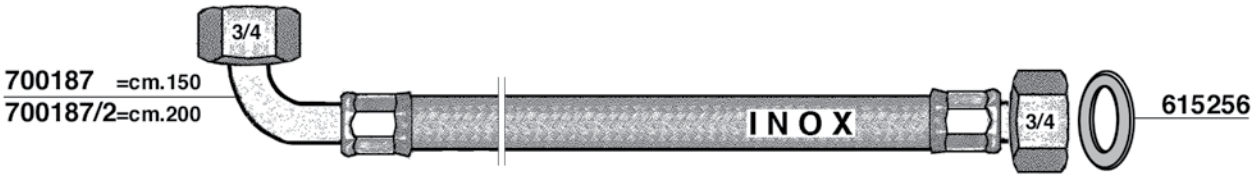

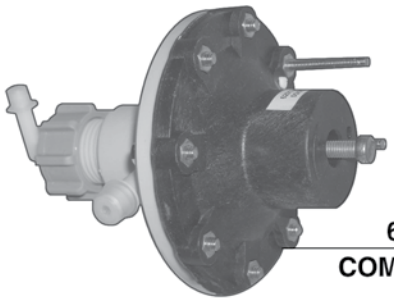

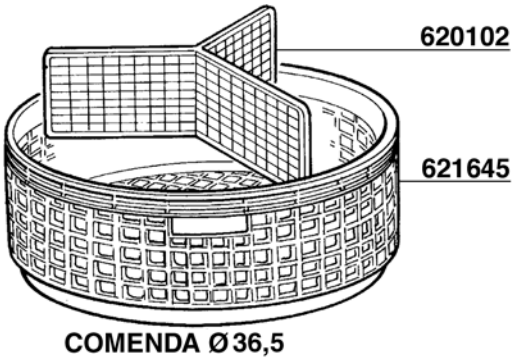
620102
621645
COMENDA Ø 36,5

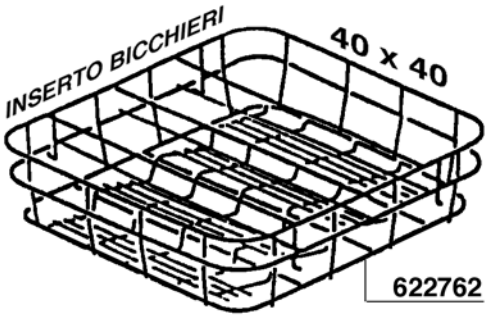
INSERTO BICCHIERI
40 x 40
622762

615218
Ø10x11

621618
10x10X12

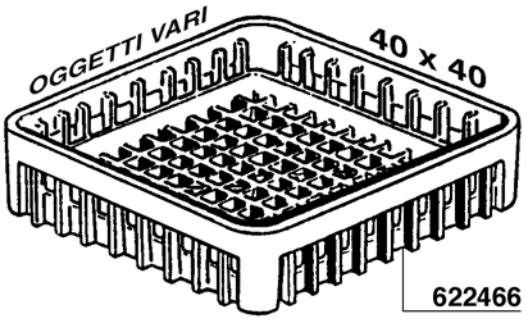
OGGETTI VARI
40 x 40
622466

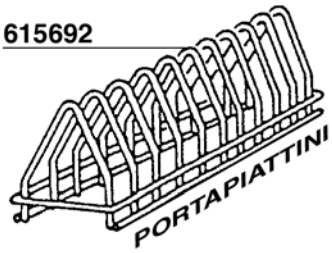
615692
PORTAPIATTINI

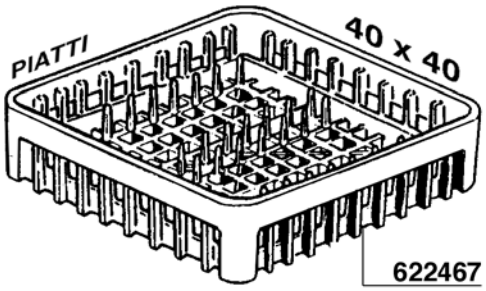
PIATTI
40 x 40
622467

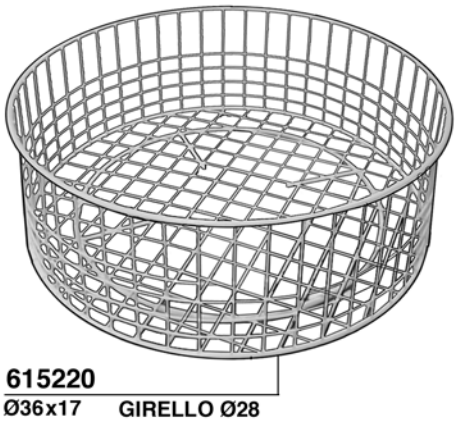
615220
Ø36x17 GIRELLO Ø28

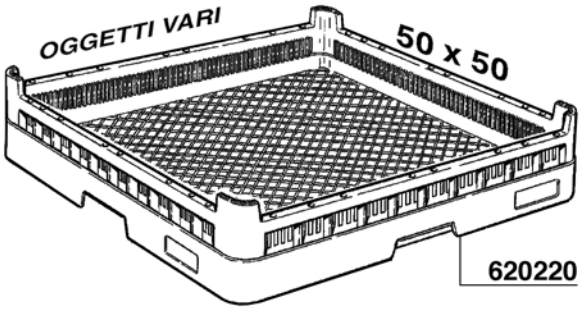
OGGETTI VARI
50 x 50
620220

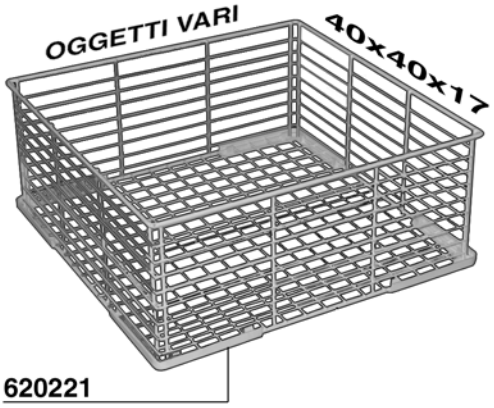
OGGETTI VARI
40x40x17
620221

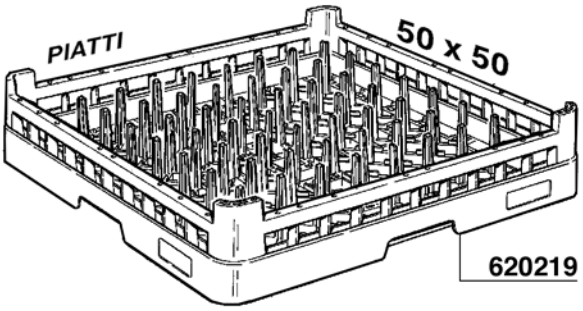
PIATTI
50 x 50
620219

621906
621907
621694/22
621838/22
621758
620023/22=W10 V220
620024/22=W5 V220

621888=F15
620242=F30
621900=F45
621891
621896
621889
EVAPORATORE
MAGAZZINO

621906
621907
621694/22
621838/22
621758
620023/22=W10 V220
620024/22=W5 V220

621888=F15
620242=F30
621900=F45
621891
621896
621889
EVAPORATORE
MAGAZZINO

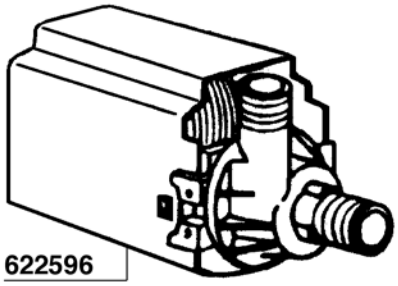

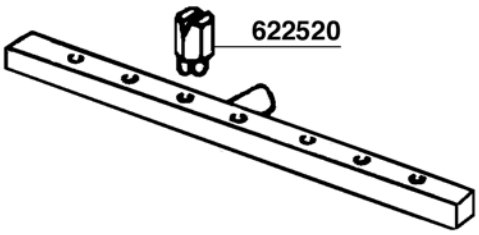

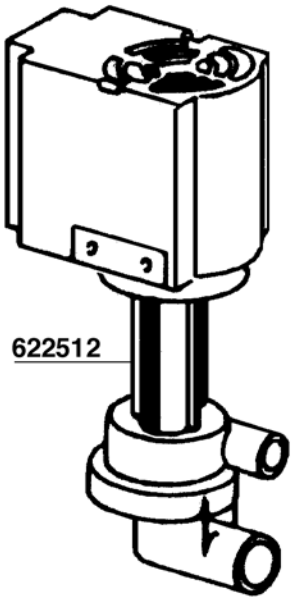

622619/F

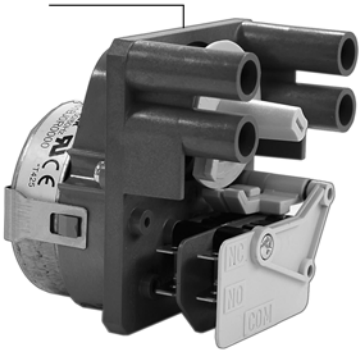

TIMER 1 CAMME 2 MICRO 15'

TERM.EVAPORATORE

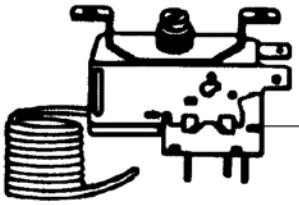

TERM.MAGAZZINO 1aSERIE

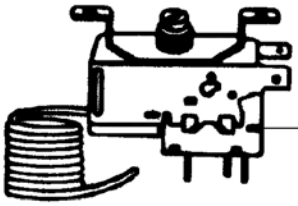

CASTEL
V220

622608

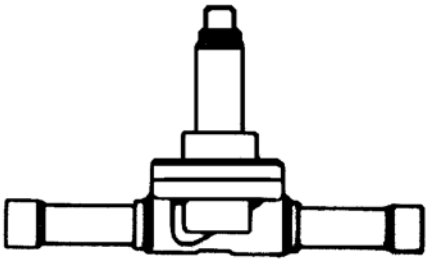

TERM.MAGAZZINO 2aSERIE

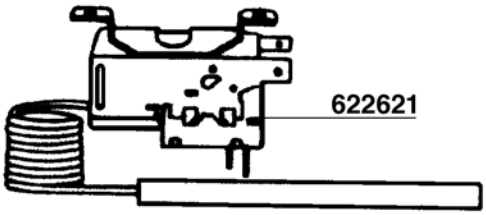

PRESSOSTATO

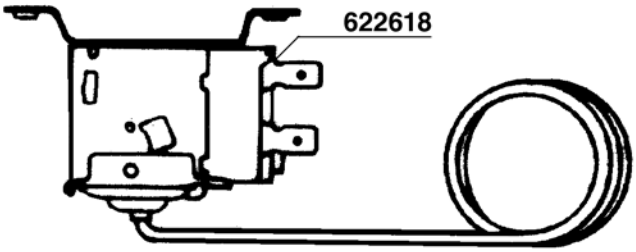

TERM.CONDENSATORE

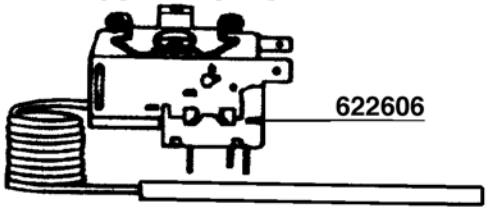

700609=1,5LT/M
700612=0,7LT/M

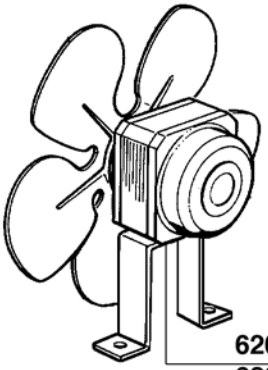

621758

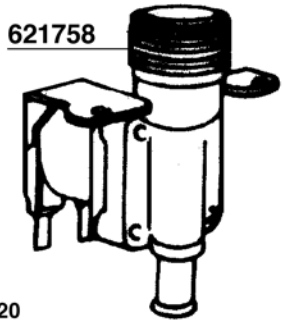

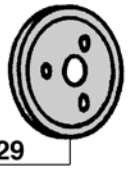

615149

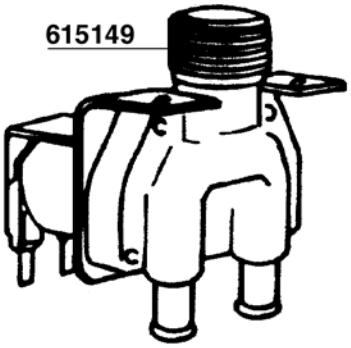

620023/22=W10 V220
620024/22=W5 V220

700129

DEPURATORI

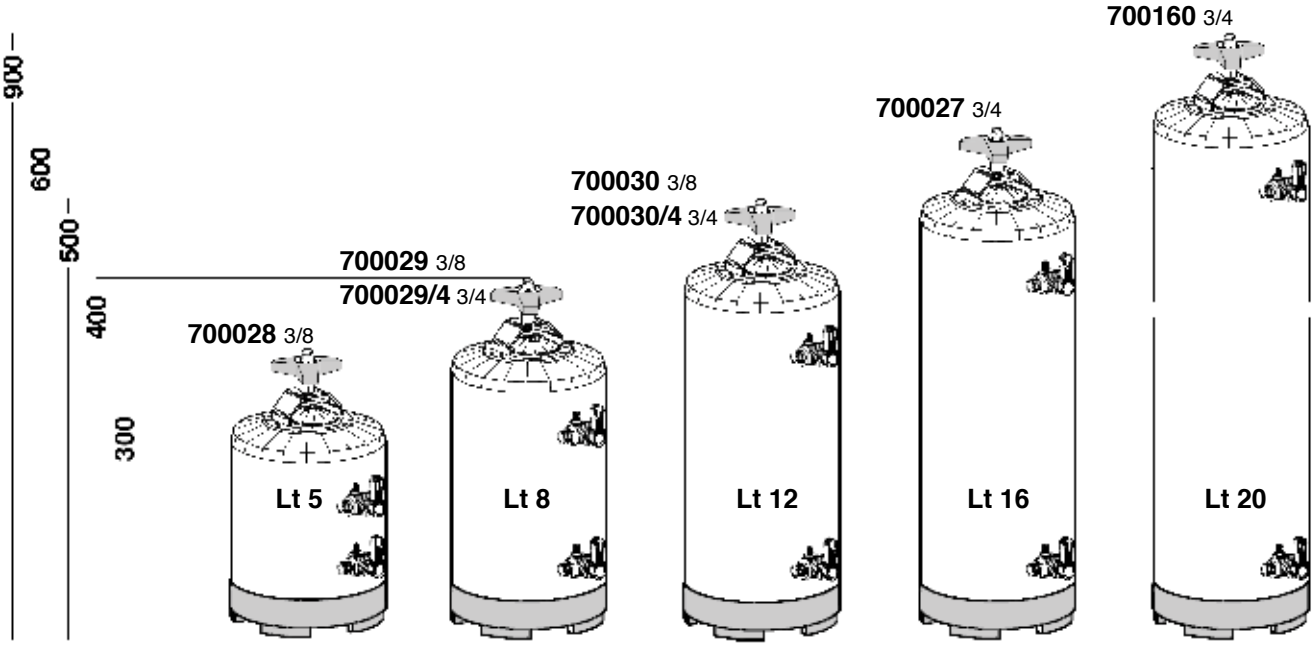

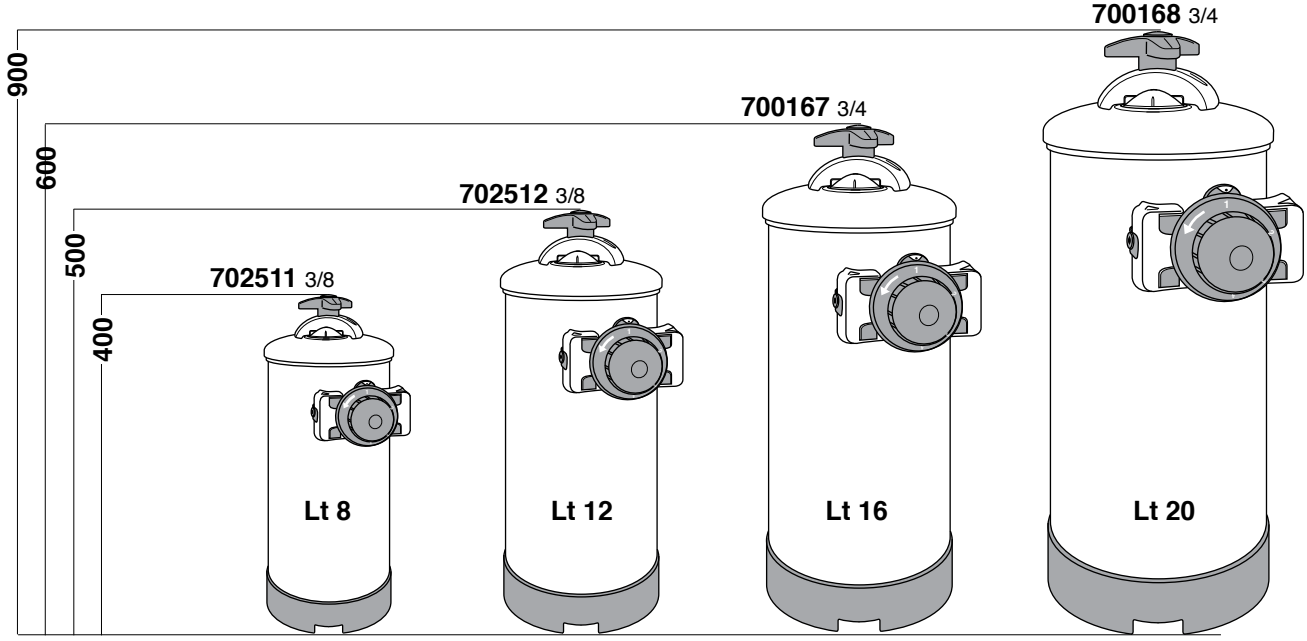

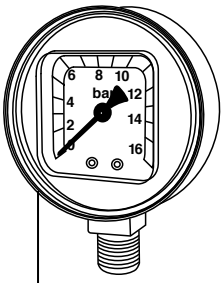

300302 16BAR

manometro consigliato per 620392
suggested manometer for 620392

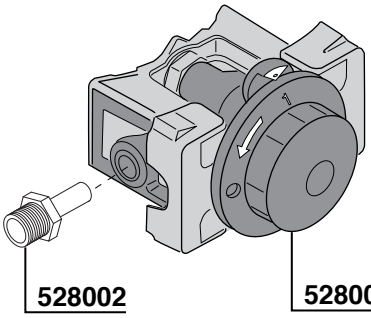

528002 **528001**

517717

NUOVO TAPPO PLASTICA
NEW PLASTIC CAP

INTERCAMBIABILE
INTERCHANGEABLE

528812

620571 =1/4 MF

per collegare 300302 e 620392
for connect 300302 and 620392

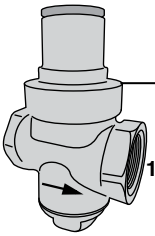

620392

riduttore pressione con attacco manometro
pressure reducer with manometer connection

620400

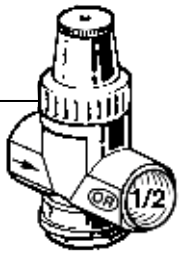

riduttore pressione
pressure reducer

DEPURATORI

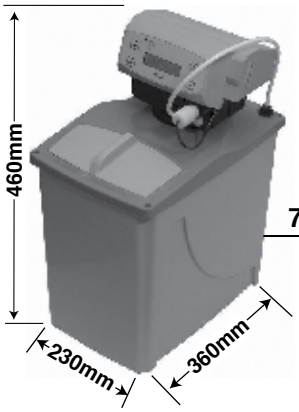

702560
LT. 5

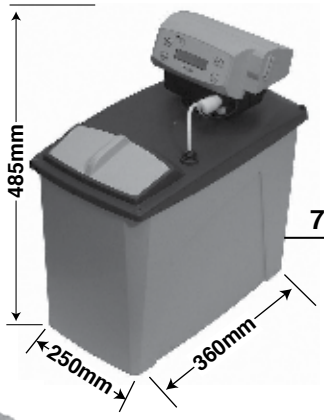

702561
LT. 8

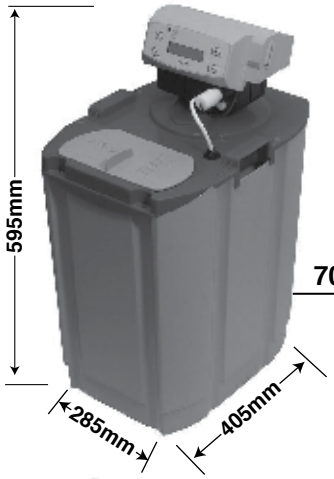

702562
LT. 12

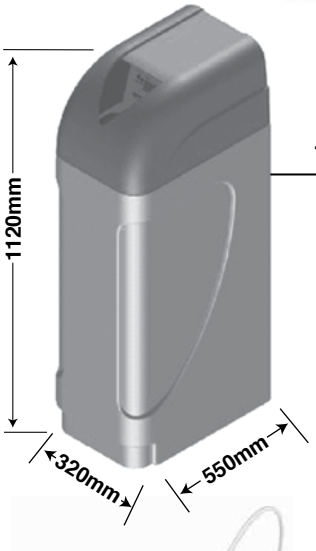

700560
LT. 26

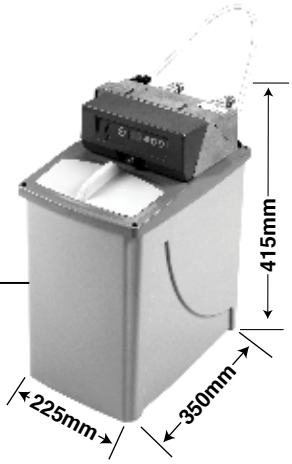

702529

702523
LT. 5

702524
LT. 8

702534
LT. 5

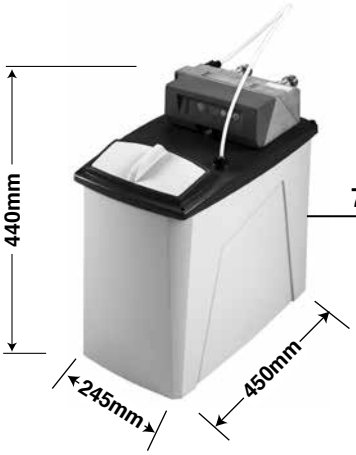

702533
LT. 8

DEPURATORI

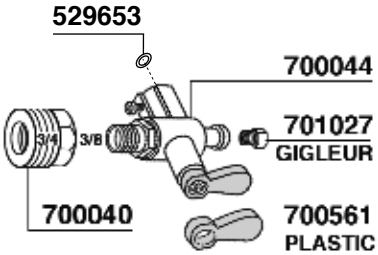
529653
700044
3/4
3/8
701027
GIGLEUR
700040
700561
PLASTIC

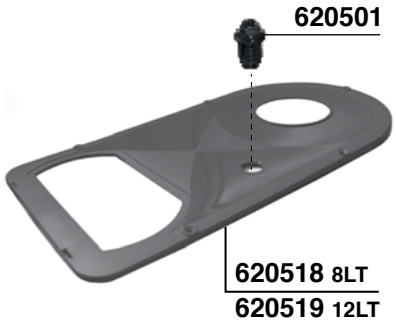
620501
620518 8LT
620519 12LT

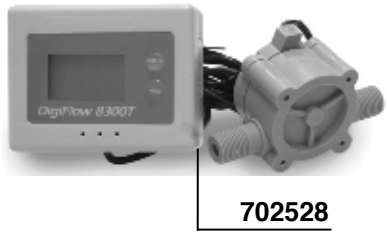
DigFlow 8300T
702528

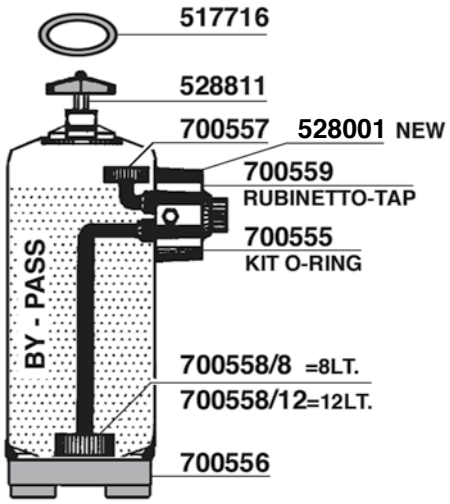
517716
528811
700557
528001 NEW
700559
RUBINETTO-TAP
700555
KIT O-RING
BY - PASS
700558/8 =8LT.
700558/12=12LT.
700556

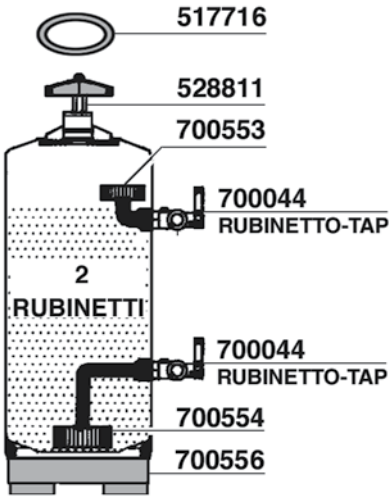
517716
528811
700553
700044
RUBINETTO-TAP
2
RUBINETTI
700044
RUBINETTO-TAP
700554
700556

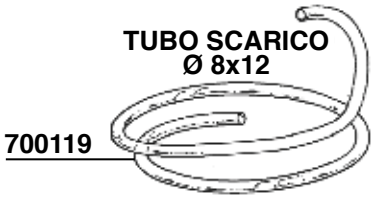
TUBO SCARICO
Ø 8x12
700119

702526

620506
PROVA DUREZZA
HARDNESS TEST

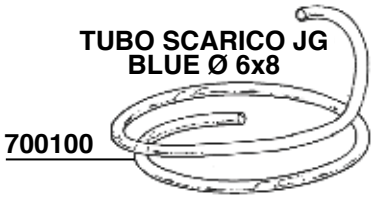
TUBO SCARICO JG
BLUE Ø 6x8
700100

DEPURATORI

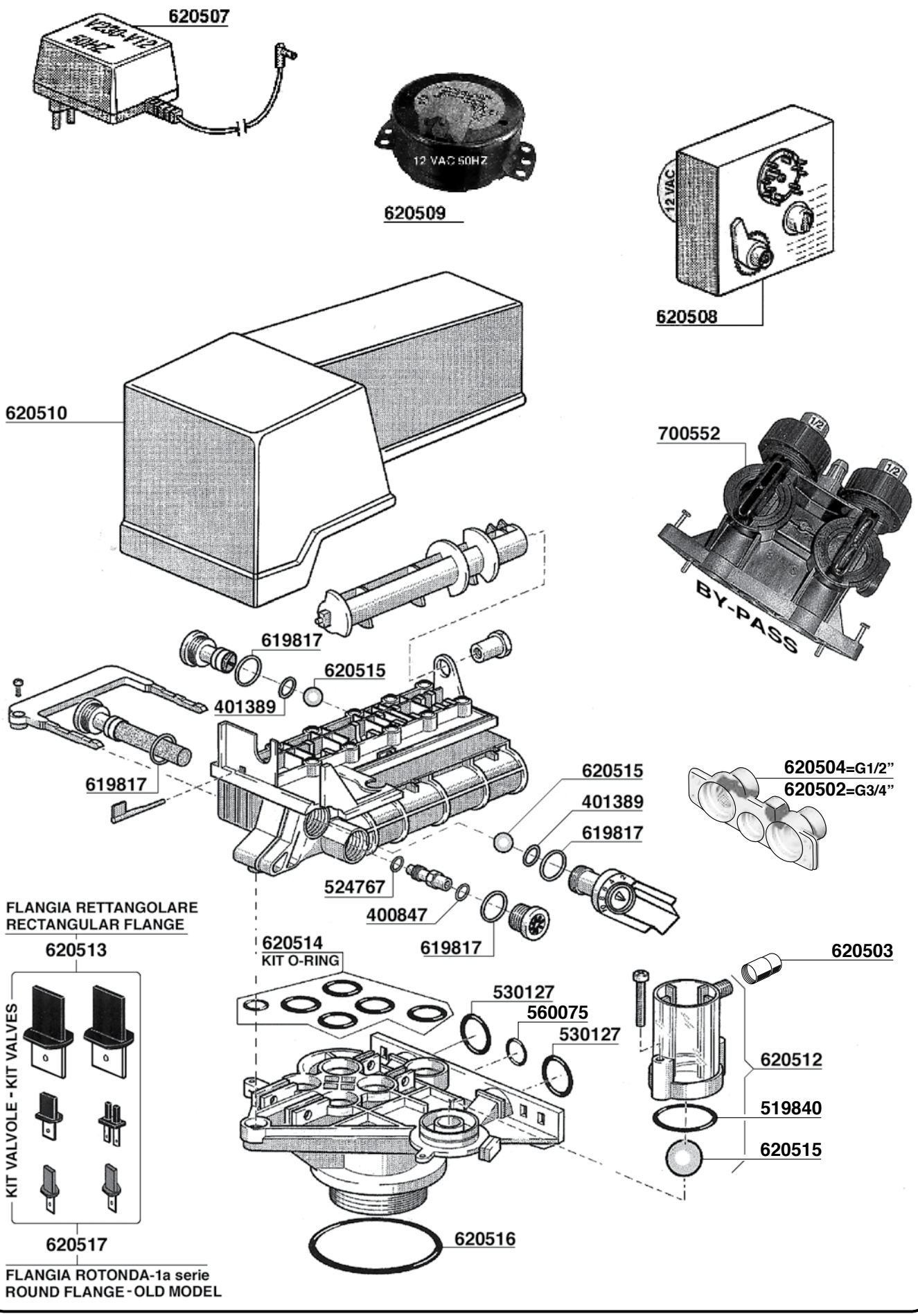
620507
12 VAC 50HZ
620509
12 VAC
620508
620510
700552
BY-PASS
619817
620515
401389
619817
620515
401389
619817
620504=G1/2"
620502=G3/4"
524767
400847
619817
FLANGIA RETTANGOLARE
RECTANGULAR FLANGE
620513
620514
KIT O-RING
620503
530127
560075
530127
620512
519840
620515
KIT VALVOLE - KIT VALVES
620517
620516
FLANGIA ROTONDA-1a serie
ROUND FLANGE - OLD MODEL

FILTRI DEPURATORI

KIT CARTUCCIA FILTRANTE
PER DEPURATORI MANUALI
FILTER CARTRIDGE KIT
FOR MANUAL SOFTENERS

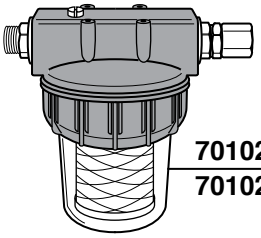

701020 5” 3/8” MF
701021 5“ 3/4” MF

KIT CARTUCCIA FILTRANTE
PER DEPURATORI AUTOMATICI
FILTER CARTRIDGE KIT
FOR AUTOMATIC SOFTENERS

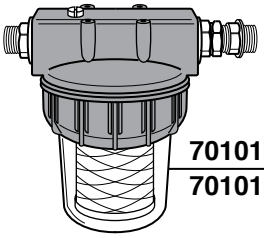

701017 5” 1/2” MM
701016 5” 3/4” MM

KIT CARTUCCIA CARBONI ATTIVI
PER DEPURATORI AUTOMATICI
ACTIVATED CARBON CARTRIDGE KIT
FOR AUTOMATIC SOFTENERS

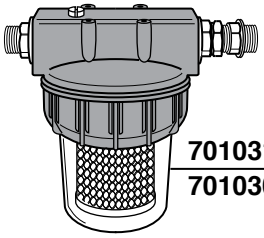

701031 5” 1/2” MM
701030 5” 3/4” MM

KIT CARTUCCIA CARBONI ATTIVI
PER DEPURATORI MANUALI
ACTIVATED CARBON CARTRIDGE KIT
FOR MANUAL SOFTENERS

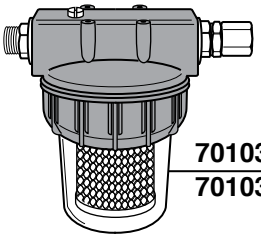

701034 5” 3/8” MF
701035 5” 3/4” MF

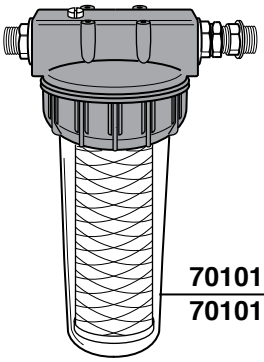

701019 9” 1/2” MM
701018 9” 3/4” MM

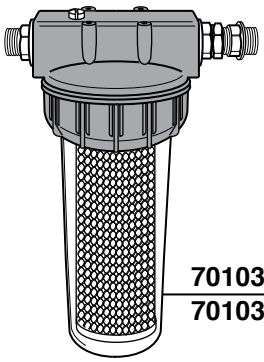

701033 9” 1/2” MM
701032 9” 3/4” MM

CARTUCCIA FILTRANTE
FILTER CARTRIDGE

701022
5”

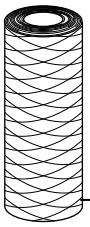

701023
9”

CARTUCCIA CARBONI ATTIVI
ACTIVATED CARBON CARTRIDGE

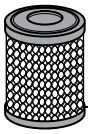

701036
5”

701037
9”

701024
CHIAVE - KEY

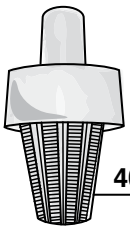

408818

701012
FILTRO DECALCIFICANTE

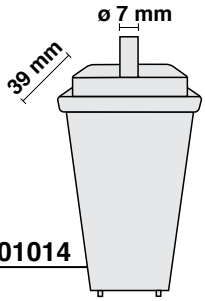

701014

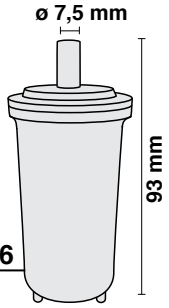

701046

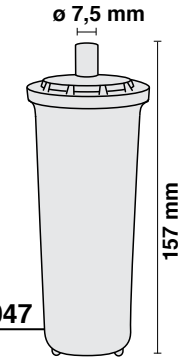

701047

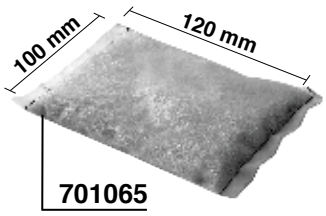

701065

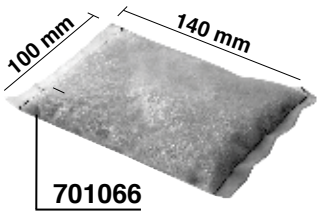

701066

ADDOLCITORE UNIVERSALE
UNIVERSAL WATER SOFTNER

591177 KG.10
591180 KG.25

700118
RESINE 25 LT

TRATTAMENTO ACQUA

702521 3/8 — **702522** 3/8 JG

702521 3/8 — **702522** 3/8 JG

702521 3/8 — **702522** 3/8 JG

702571

702518
2250 Lt

702519
3800 Lt

702527
0,2 micron

702570
6000 Lt.

702563

702564
WITH TANK

702559
HF40

702565
HF40-S

702566
HF37

702567
MEMBRANE

702568
CARBON BLOCK
0,5 um

702528

702520
CARTINE TORNASOLE
LITTMUS PAPER

620506
KIT PROVA DUREZZA
HARDNESS TEST

POMPE

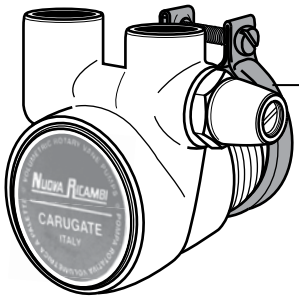

700048 100 Lt/h
700048/2 200 Lt/h

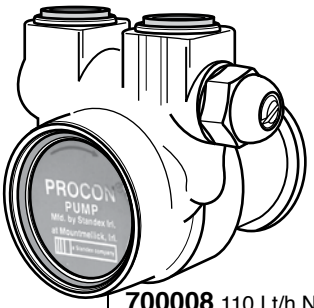

700008 110 Lt/h NSF
700008/X INOX-STAINLESS STEEL
700008/2 200 Lt/h
700012/X 150LT/H INOX-STAINLESS STEEL

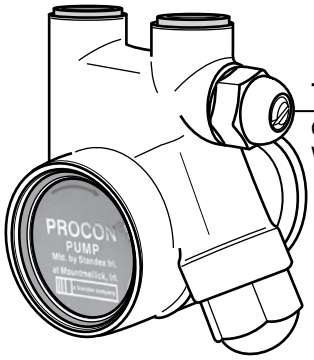

700008/F 150 Lt/h
CON FILTRO
WITH FILTER

700042

700047 50 Lt/h
MINIPOMPA

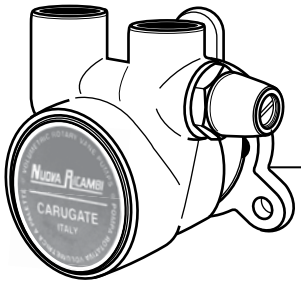

700049 100 Lt/h
700049/2 200 Lt/h

700009 110 Lt/h NSF
700009/2 200 Lt/h

630177 NUOVA RICAMBI 150 Lt/h
630177/NSF
630177/X = INOX-STAINLESS STEEL

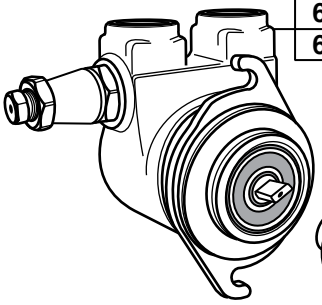

608987
521923
523082
Ø 40

635956
635955
635956
Ø 35

630178 ROTOFLOW 150 Lt/h

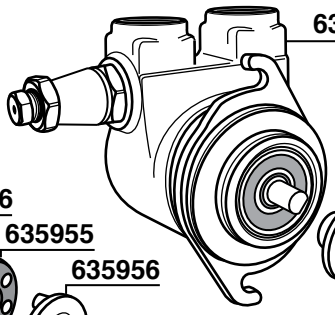

523082
521923
523082
Ø 40

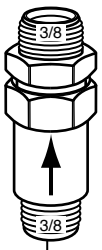

700011/E

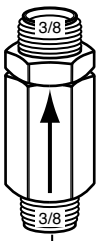

700011

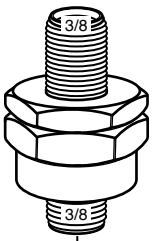

408194
FILTER

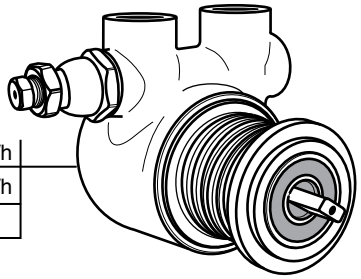

620406 ROTOFLOW 150 Lt/h
620406/2 ROTOFLOW 200 Lt/h
620406/X INOX

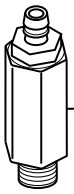

618966
ø 8

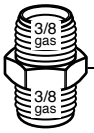

514901

300055
USA

620441
CIECA - BLIND
620442
CON RITEGNO
ONE WAY

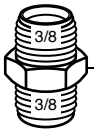

514902
FILTER

ELETTROPOMPE

621347=10μF V220
702311=16μF V110
700154/22=V220/50 W165
700085/22=V220/50/60 HP1/5 UL USA
700085/11=V110/60 HP.1/5 UL USA
700048 =100LT/H
700032/22=V220/50 W165

621347
CAPACITOR
CONDENSAT.
10 μF
700084/22
V220/50/60 W165
700042

621347=10μF V220
700155/22=V220/50 W150
523082
521923
523082
700049=100LT/H
508911
700171/22=V220/50 W150

MOTORE RAFFREDDATO AD ACQUA - MOTOR WATERCOOL

μF 6,3
621112
700182
700182
514901
524555
514901
524555
700182
703024
703023
MOTOR V220 W260
700042
700048
700008 PROCON
700008/X INOX
STAINLESS STEEL

700086/22=V220/50/60 W150
700086/11=V110/60 W120
621112= 6,3μF 220V
621113= 25μF 110V
110
150
125
MOTORE PICCOLO
SMALL MOTOR

ELETTROPOMPE COMPATIBILI FAEMA

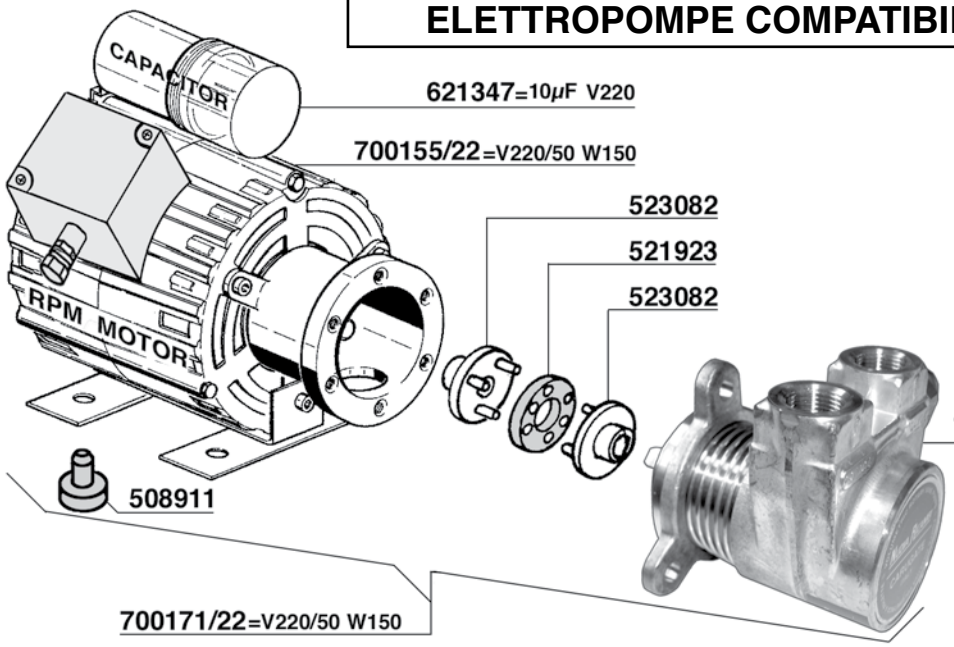

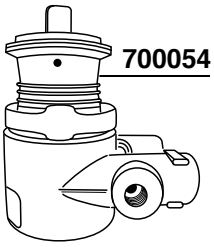

TRONIC-STAR-E91-DUE

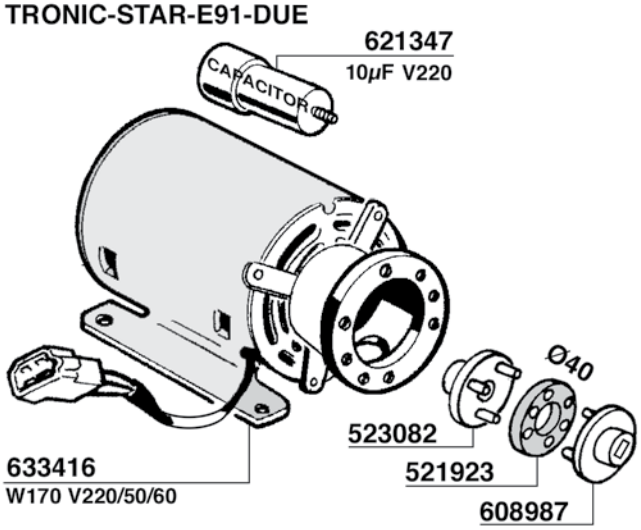

SPECIAL-EXPRESS-COMPACT

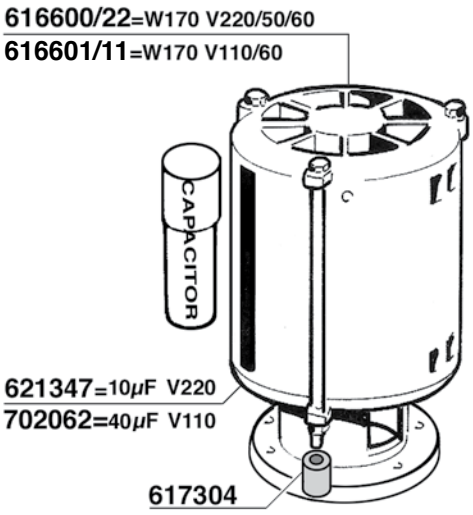

NEW E61

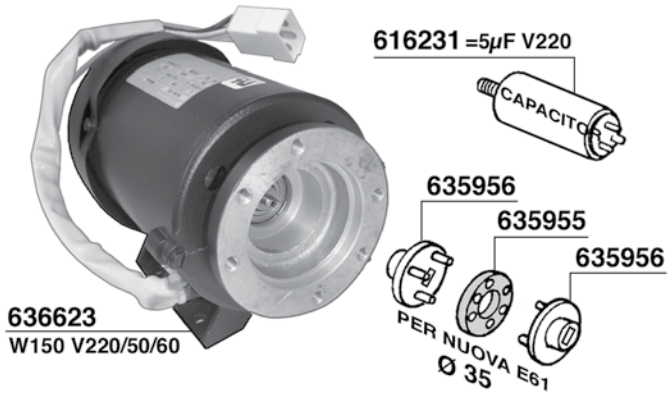

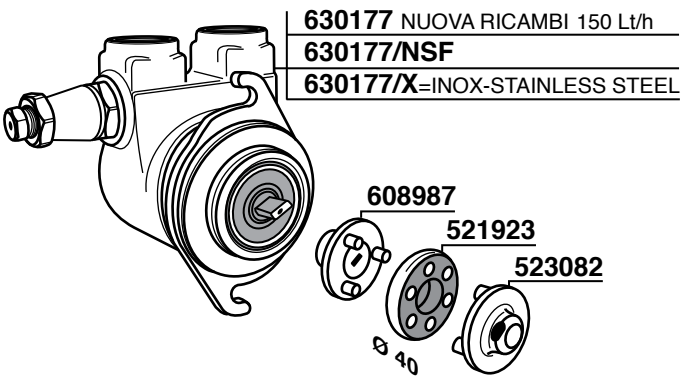

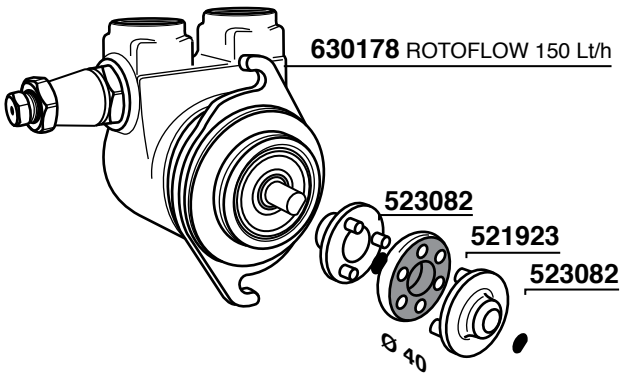

VARI

ELETTROPOMPE

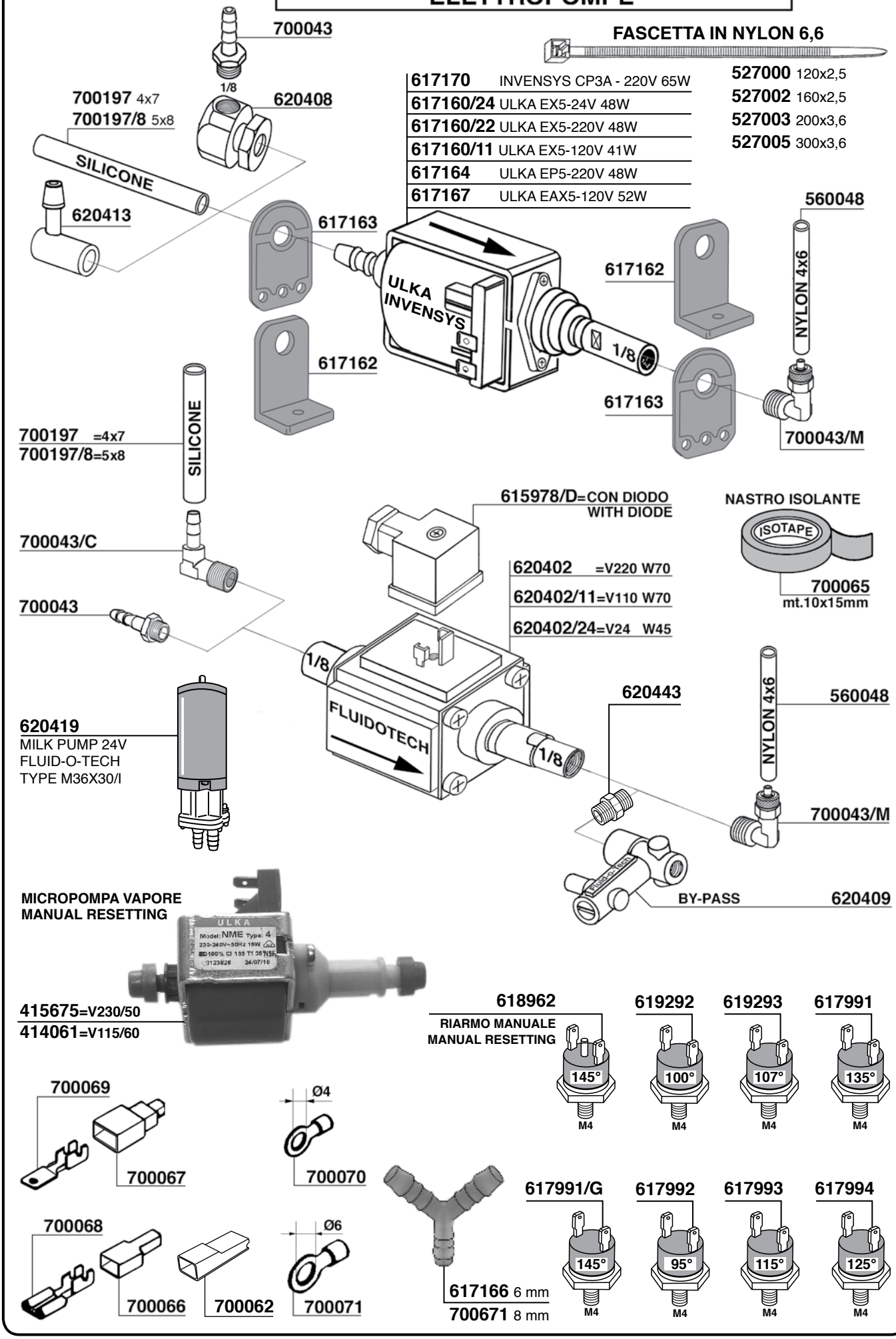

617170	INVENSYS CP3A - 220V 65W
617160/24	ULKA EX5-24V 48W
617160/22	ULKA EX5-220V 48W
617160/11	ULKA EX5-120V 41W
617164	ULKA EP5-220V 48W
617167	ULKA EAX5-120V 52W

FASCETTA IN NYLON 6,6

527000	120x2,5
527002	160x2,5
527003	200x3,6
527005	300x3,6

TUBI

TUBI GOMMA - RUBBER HOSES
FOOD QUALITY - BAR 25 - t.110°C

3/8F - 3/8F CONICO - CONICAL

700014 50 cm
700015 60 cm
700016 80 cm
700017 150 cm
700018 200 cm

TUBI INOX - STAINLESS STEEL HOSES
BAR 12 - t.90°

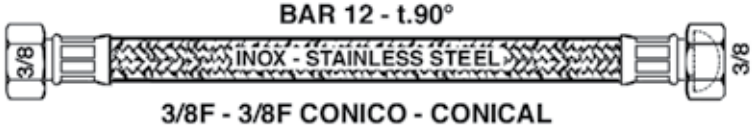

3/8F - 3/8F CONICO - CONICAL

700182 50 cm
700183 80 cm
700196 100 cm
300050 120 cm
700184/S 150 cm
300051 210 cm

TUBI INOX - STAINLESS STEEL HOSES
BAR 12 - t.90°

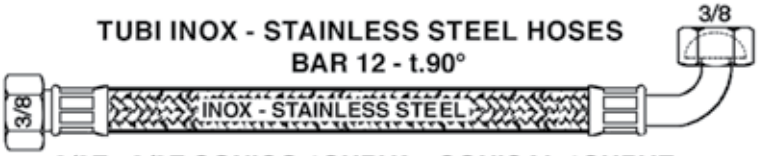

3/8F - 3/8F CONICO 1CURVA - CONICAL 1CURVE

700186 50 cm
700184 150 cm
700185 200 cm

TUBI INOX - STAINLESS STEEL HOSES
BAR 12 - t.90°

3/4F -3/4F - PIANO 1CURVA - FLAT 1CURVE

700187 150 cm
700187/2 200 cm

TUBI INOX - STAINLESS STEEL HOSES
BAR 12 - t.90°

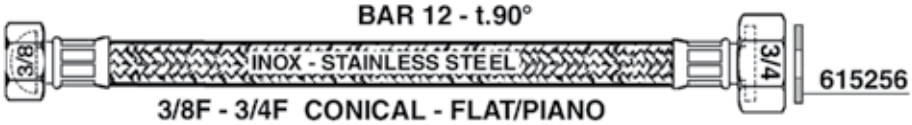

3/8F - 3/4F CONICAL - FLAT/PIANO

300052 150 cm

1/8 F - 1/8 F PIATTO/ FLAT

700250 37 cm

TUBI INOX - STAINLESS STEEL HOSES
BAR 12 - t.90°

3/8F - 3/4F - PIANO 1CURVA - FLAT 1CURVE

300053 200 cm
300054 80 cm

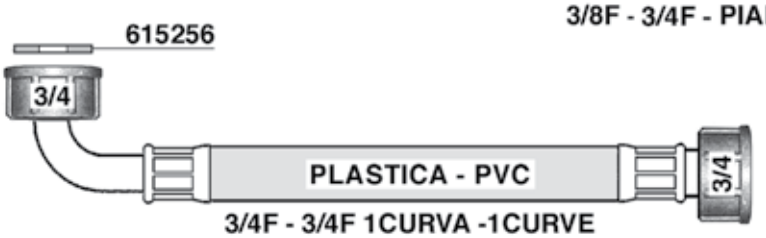

3/4F - 3/4F 1CURVA -1CURVE

615273 200 cm
615274 150 cm

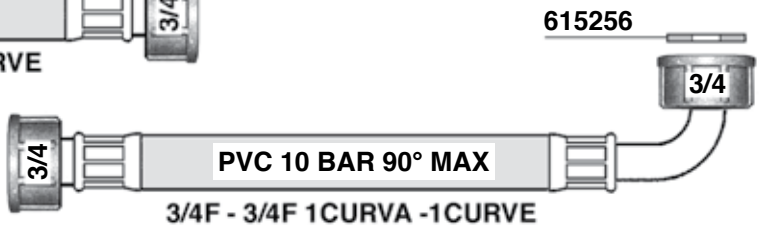

3/4F - 3/4F 1CURVA -1CURVE

615275 200 cm
615276 150 cm

TUBI

TUBI GOMMA - RUBBER HOSES
BAR 25 -t.110°C

GOMMA - RUBBER

700003 Ø 8x17
700003/10 Ø 10x17

TUBI SILICONE - SILICON HOSES

SILICONE - SILICON

700197/6 Ø 3x6
700197 Ø 4x7
700197/8 Ø 5x8
400304 Ø 6x9
700197/10 Ø 6x8
700197/12 Ø 8x12

TUBO GAS - GAS HOSE

700198 Ø 13x20

TUBI RILSAN - RILSAN HOSES
BAR 20 - t 20°C

RILSAN

560048 Ø 4x6
560049 Ø 6x8

TUBI TEFLON - TEFLON HOSES

TEFLON

560047 Ø 5x3
405335 Ø 6x4
560049/T Ø 6x8

TUBI SCARICO ELISPIR - DRAIN ELISPIR HOSES

ELISPIR

700031 Ø 12x18
700031/14 Ø 14x20
700031/16 Ø 16x23
700031/18 Ø 18x25

ELISPIR

700037 Ø 20X26
700037/25 Ø 25X33
700037/30 Ø 30X38

TUBI RAME - COPPER HOSES

RAME - COPPER

M701007 Ø 2x4
M701006 Ø 4x6
M701087 Ø 6x8
M701084 Ø 8x10
M701085 Ø 10x12

TUBO SCARICO - DRAIN HOSES
PLASTICA NERO - BLACK PLASTIC

560058 Ø 14x18
560059 Ø 16x20
560060 Ø 20x24

700078 8-12
700004 12-22
700088 20-32
700079 25-40
700080 30-45

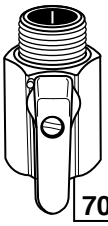

700169/M
3/8M - 3/8F

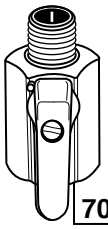

700170/V
1/4M - 1/4F

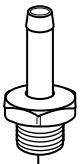

700053
Ø4 - 1/8

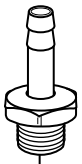

700043
Ø6 - 1/8

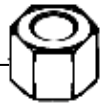

700000
3/8

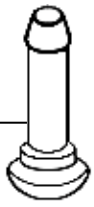

700001
Ø8

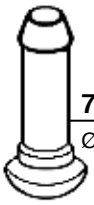

700001/10
Ø10

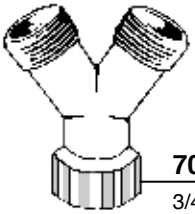

700188
3/4 - PLASTIC

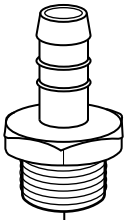

700033
Ø12 - 1/2

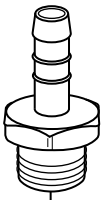

700002
Ø8 - 3/8

552273

552273/6

552273/8

547241

547242

547244

547245

547246

RACCORDI

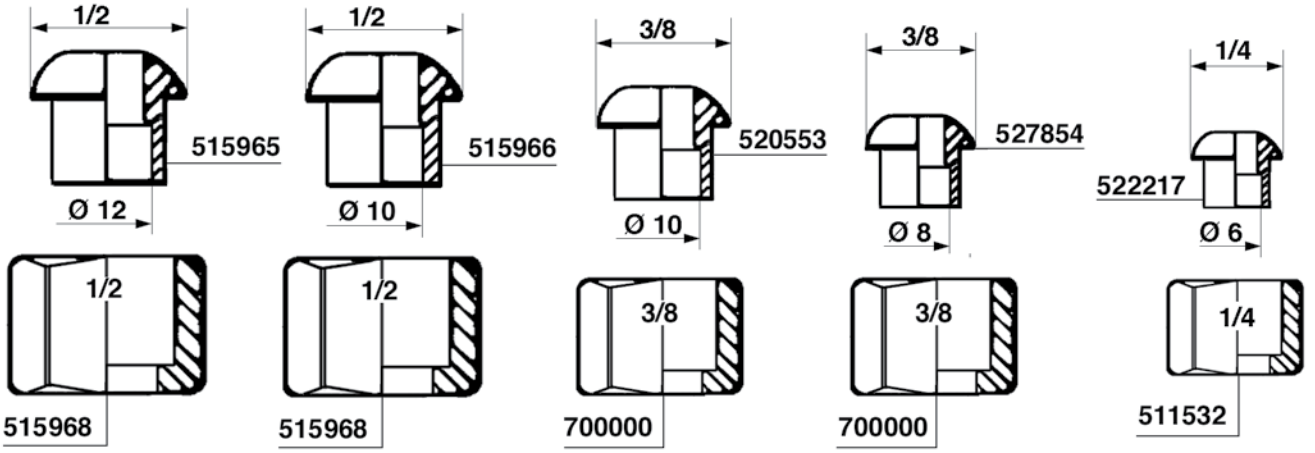

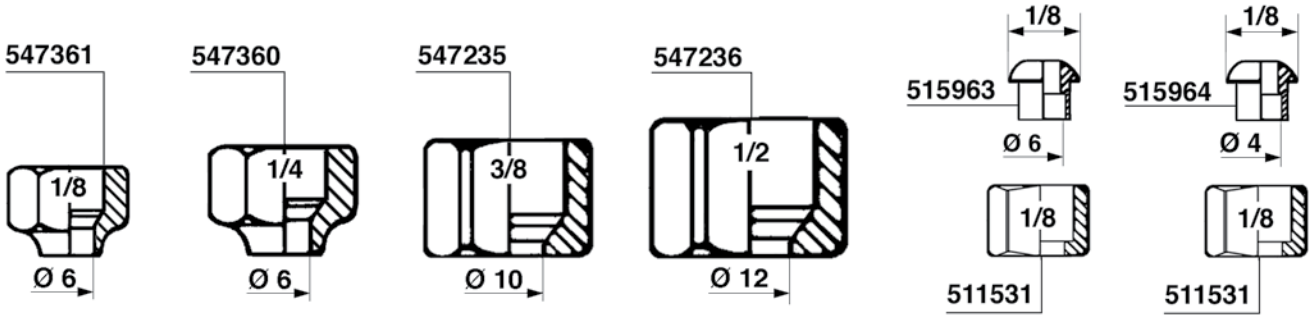

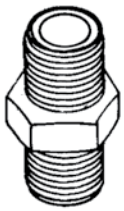

700023= 1/8M
700039= 1/4M
514901= 3/8M
700034= 1/2M
620401= 3/4M

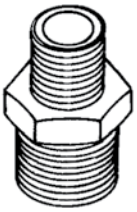

700056= 1/8M - 1/4M
620581= 1/8M - 3/8M
700036= 1/4M - 3/8M
700035= 3/8M - 1/2M
700041= 3/8M - 3/4M
700098= 1/2M - 3/4M
700114= 1"M - 3/4M
620578= 1"M - 3/8M

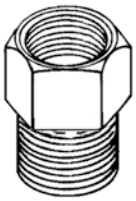

620399= 1/8F - 1/4M
700046= 1/8F - 3/8M
620398= 1/4F - 1/8M
700082= 1/4F - 3/8M
620582= 3/8F - 1/8M
700091= 3/8F - 1/4M
700089= 3/8F - 3/8M
700090= 3/8F - 1/2M
700092= 1/2F - 3/8M
700093= 3/4F - 3/8M
700083= 3/4F - 1/2M

300055 9/16 inch
300056 5/8 inch

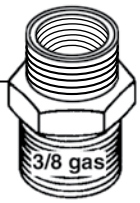

for USA

700040

TAPPO FEMMINA-FEMALE PLUG

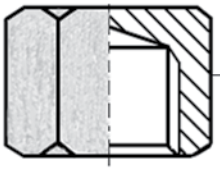

620580/1=1/8F
620580/2=1/4F
620580/3=3/8F
620580/4=1/2F

GUARNIZIONE TEFLON
TEFLON GASKET

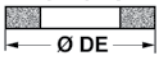

529010/1 = ØDE 1/8
529010/2 = ØDE 1/4
529010/3 = ØDE 3/8
529010/4 = ØDE 1/2
529010/5 = ØDE 3/4

TAPPO MASCHIO-MALE PLUG

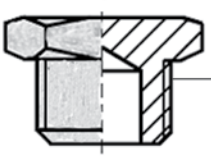

620579/1=1/8M
620579/2=1/4M
620579/3=3/8M
620579/4=1/2M

GUARNIZIONE TEFLON
TEFLON GASKET

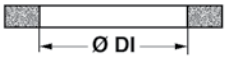

529011/1 = ØDI 1/8
529011/2 = ØDI 1/4
529011/3 = ØDI 3/8
529011/4 = ØDI 1/2
529011/5 = ØDI 3/4

522130

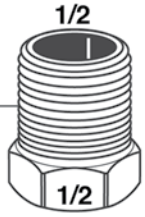

522129

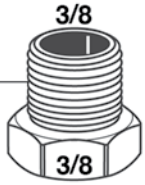

RACCORDI

620550=1/8M
620551=1/4M
620552=3/8M
620553=1/2M

620554=1/8F
620555=1/4F
620556=3/8F
620557=1/2F

620558=1/8FFM
620559=1/4FFM
620560=3/8FFM
620561=1/2FFM

620583=1/8FMM
620584=1/4FMM

620585=1/8MMF
620586=1/4MMF

620588=MFF

620562=1/8M
620563=1/4M
620564=3/8M
620565=1/2M

400226=1/8M-1/4M

620566=1/8F
620567=1/4F
620568=3/8F
620569=1/2F

620570=1/8MF
620571=1/4MF
620572=3/8MF
620573=1/2MF

620549=3/8MM-1/4F
703058=1/2MM-1/4F

703068=1/2MM

400157=1/8F Ø 6

408280=1/8M Ø 6

410761=1/8M Ø 4

410760=1/8M Ø 4
408858=1/8M Ø 6

RACCORDI

700043

620587

700043/C

700043/M

620547=1/8M Ø 6

620548=1/8M Ø 6

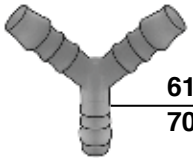

617166 6 mm
700671 8 mm

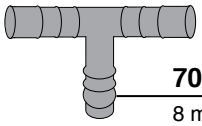

700692
8 mm

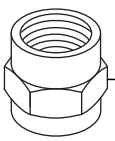

620574=1/8F
620410=1/4F
620411=3/8F
620575=1/2F

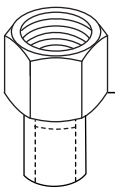

620576=1/8F - 1/4F
620412=1/4F - 3/8F
620577=3/8F - 1/2F

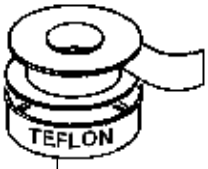

700022
mt.12x12mmx0,07mm

591671
TEFLON THREAD

PIEDINI

GOMMA NERA - BLACK RUBBER

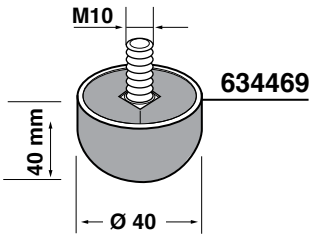

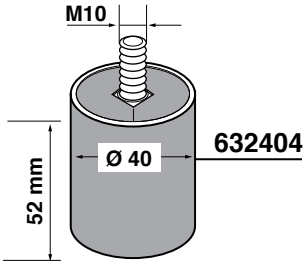

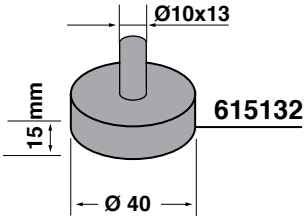

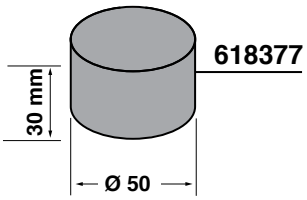

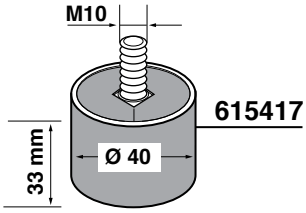

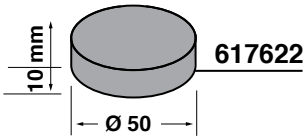

PLASTICA NERA - BLACK PLASTIC

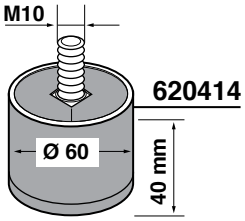

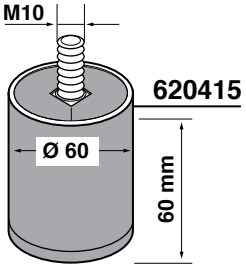

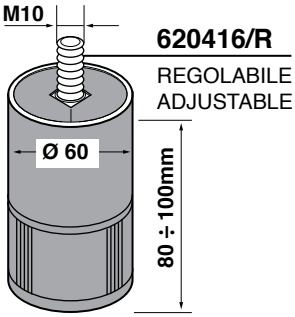

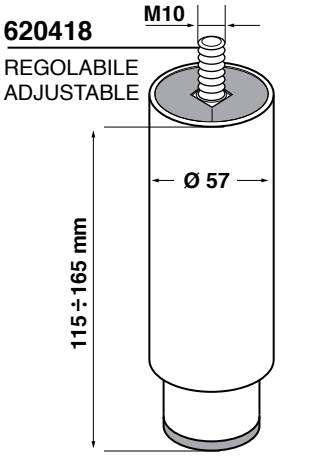

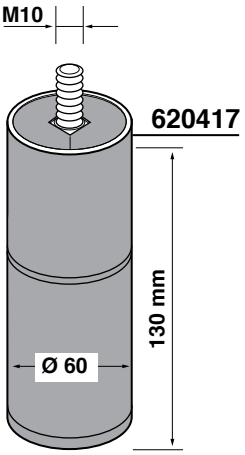

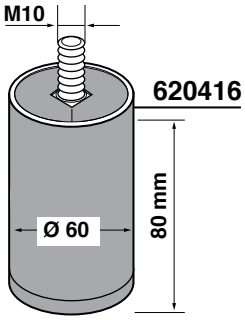

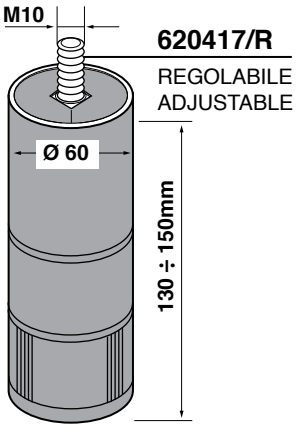

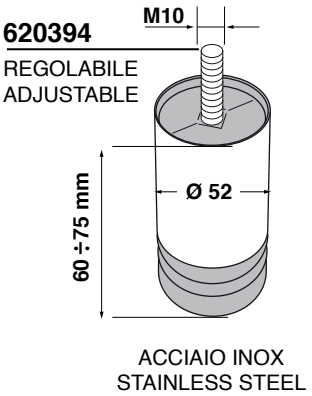

CAPPUCCINATORI

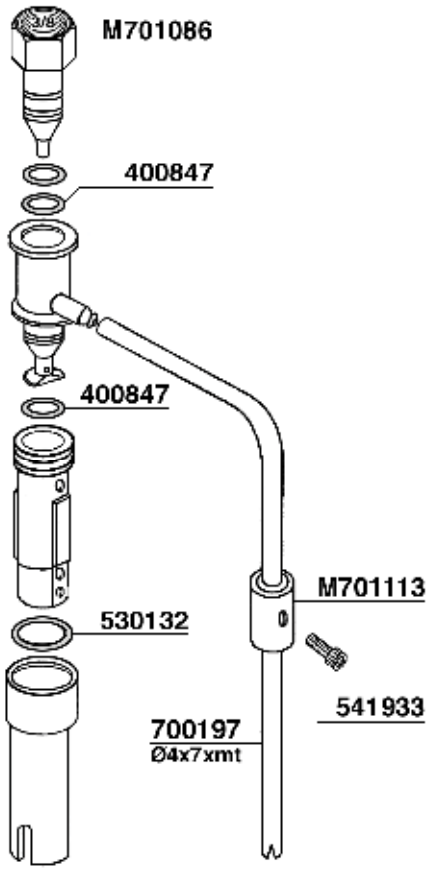

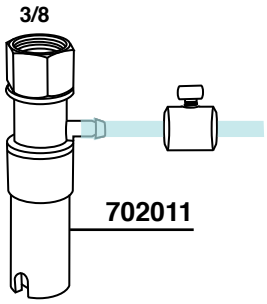

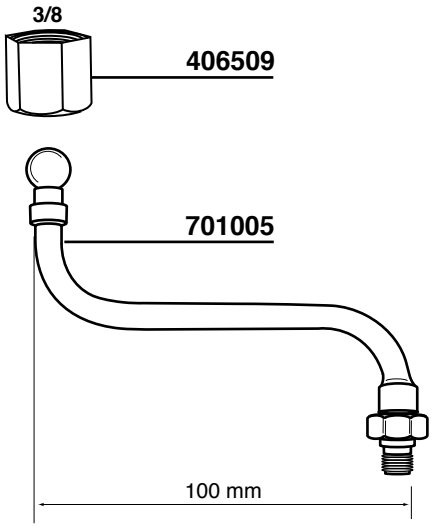

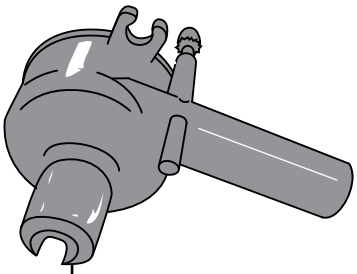

701026/B WHITE
701026/N BLACK

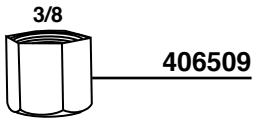

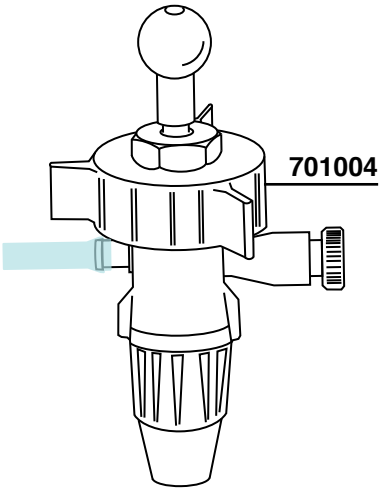

CAPPUCCINATORE BOY
APRIBILE - OPENABLE

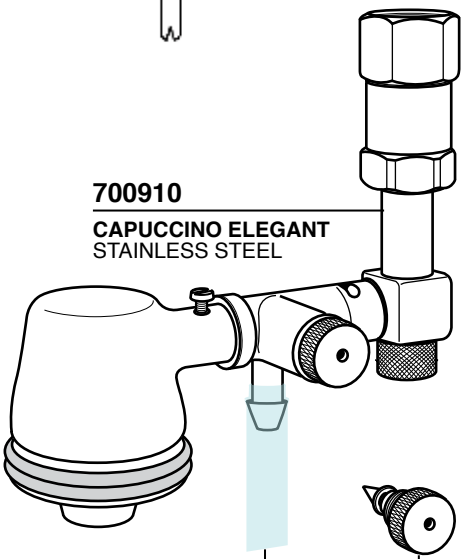

700914
PERNO
REGOLAZIONE

KIT AUTOSTEAM

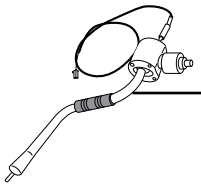

620724

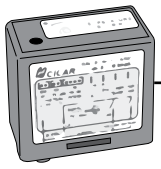

620726

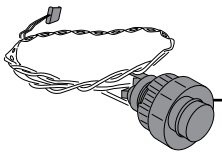

702466/N

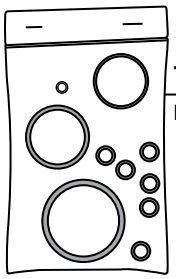

700913
KIT O-RING

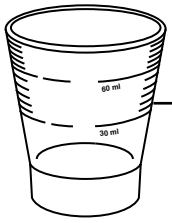

701011

BICCHIERINO PIREX 60-30 ml
PIREX SHOT GLASS 60-30 ml

VARI

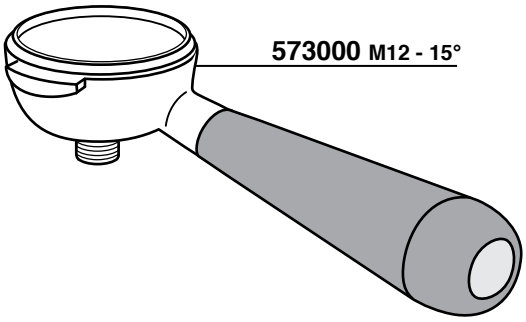

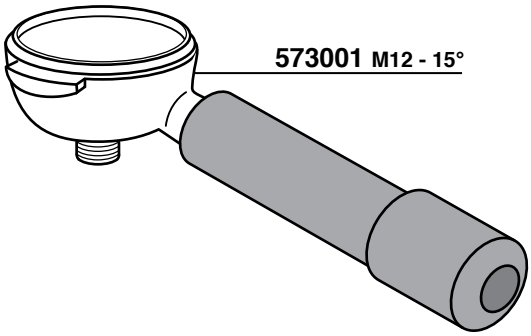

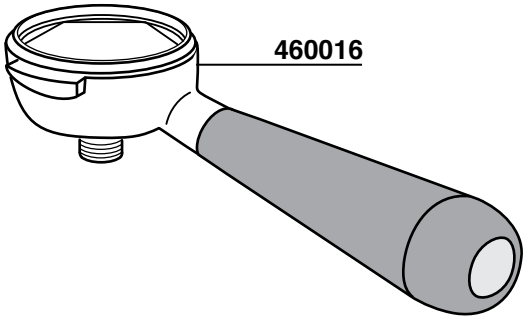

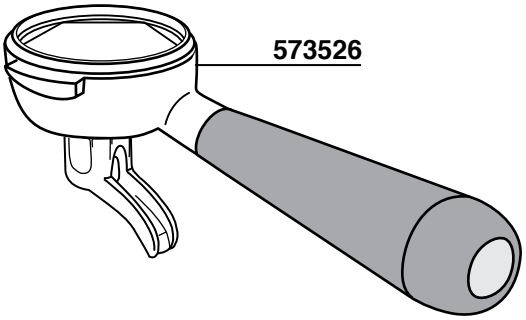

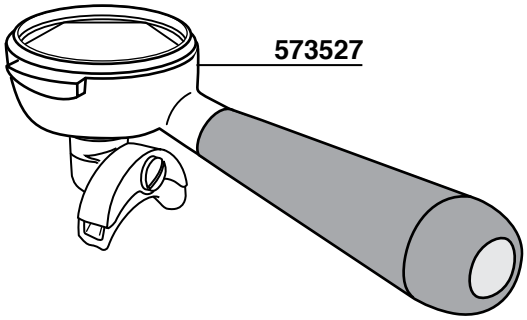

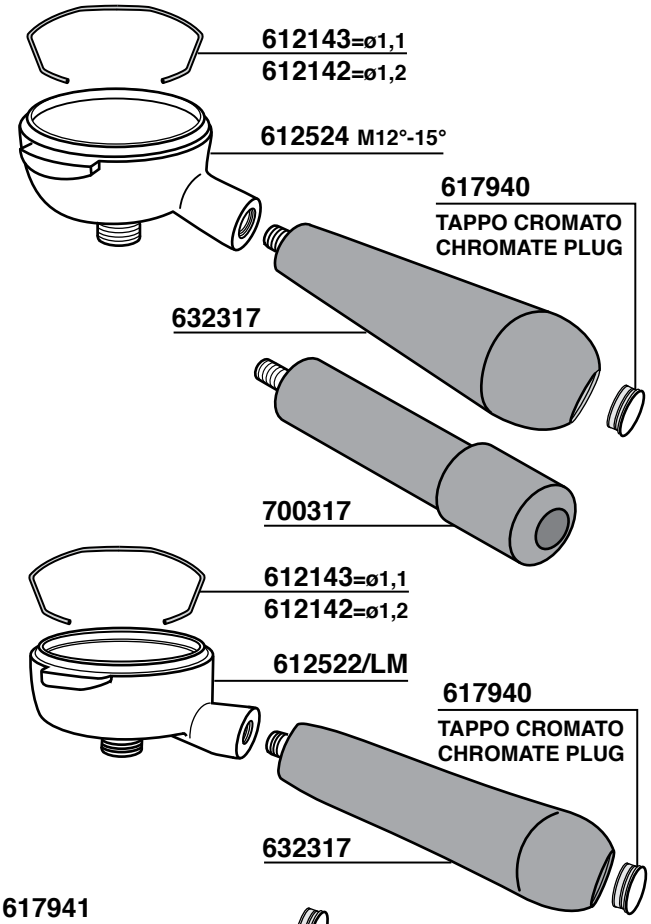

617941
TAPPO CROMATO BLU
CHROMATE PLUG BLUE

617943
TAPPO CROMATO RAME
CHROMATE PLUG COPPER

617944
TAPPO CROMATO ORO
CHROMATE PLUG GOLD

FILTRO PER CIALDE

407110
1 CAFFE'
SPAZIALE

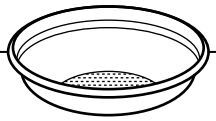

409169 1 CAFFE' 16 mm
407108 1 CAFFE' 17 mm
410392 1 CAFFE' 17,5 mm
407109 2 CAFFE' 22 mm
407111 2 CAFFE' 21 mm

410504
35x54x1

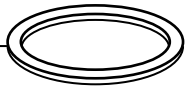

526100
525000
SALDATA/WELDED

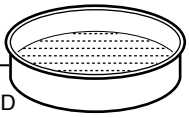

409988
35x49x1

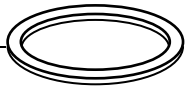

700163

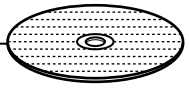

NEW

526103

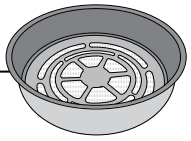

ARIETE
ASTORIA
AURORA
BEZZERA
BRASILIA
CARIMALI
CIMBALI
CONTI
FAEMA
GAGGIA
MARZOCCO
NUOVA SIMONELLI
PAVONI
RANCILIO
VIBIEMME
WEGA

INOX STAINLESS STEEL

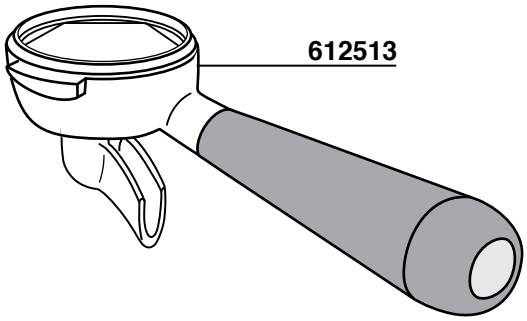

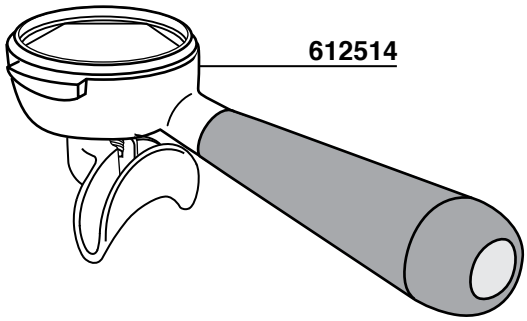

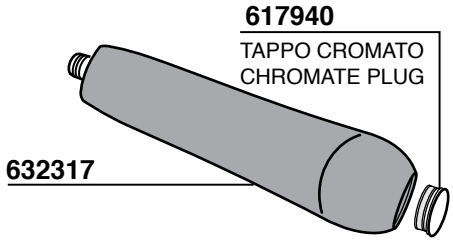

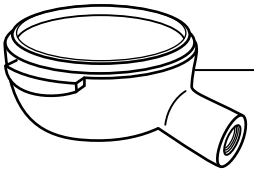

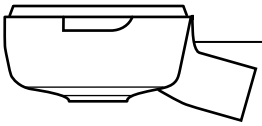

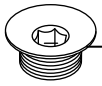

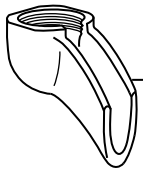

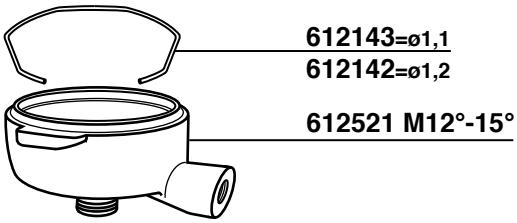

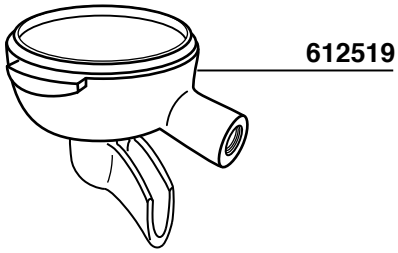

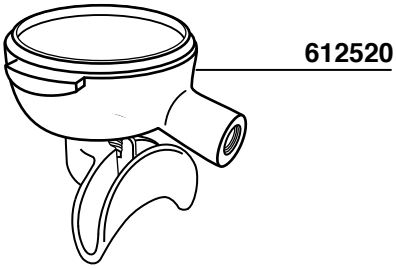

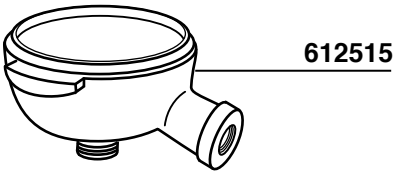

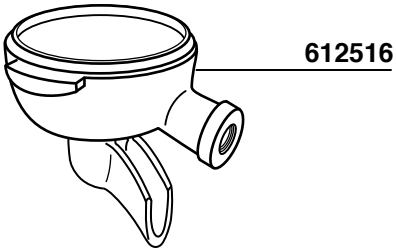

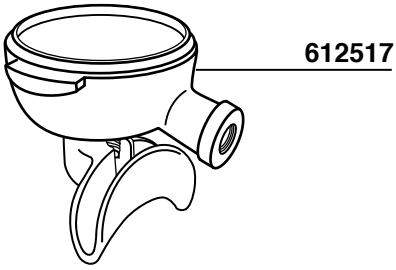

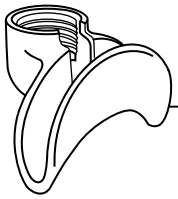

PRODOTTI CHIMICI

700019
900 gr

591182
60 TABLETS
2,5 gr each

591186
100 TABLETS
1 gr each

591195
900 gr
591196
250 gr

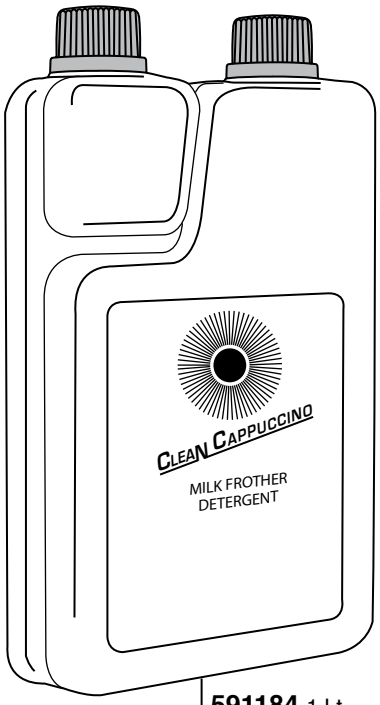

591184 1 Lt

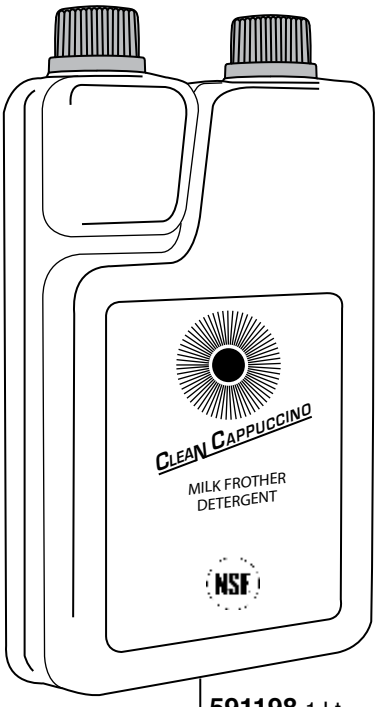

591198 1 Lt

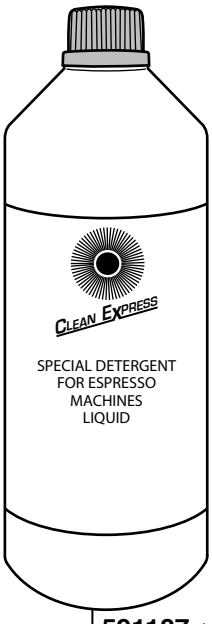

591187 1 Lt

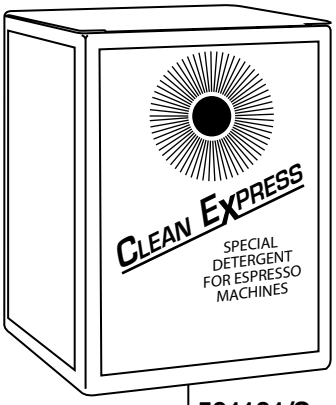

591181/S
15 SACHETS

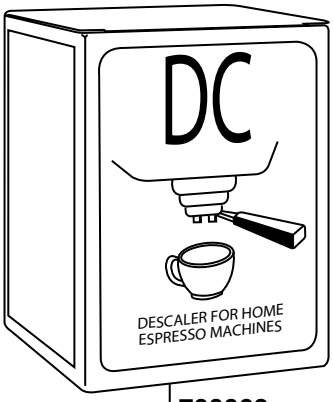

700063
12 SACHETS

PRODOTTI CHIMICI

591188 6 kg
CON CLORO - WITH CHLORINE

591189 12 kg
CON CLORO - WITH CHLORINE

591192
SENZA CLORO - WITHOUT CHLORINE

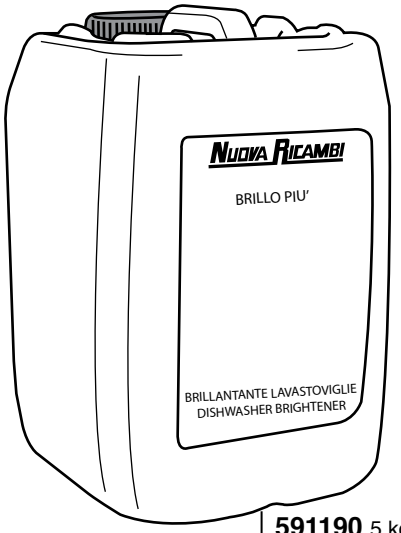

591190 5 kg

591191 10 kg

591193 6 kg

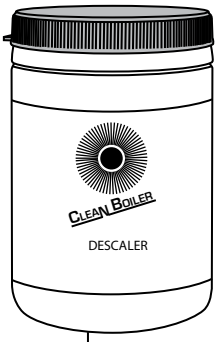

700020
1000 gr

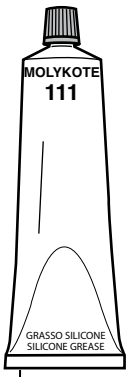

591659 100 gr

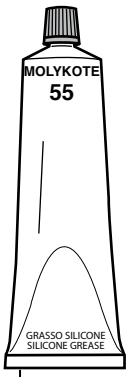

591660 100 gr

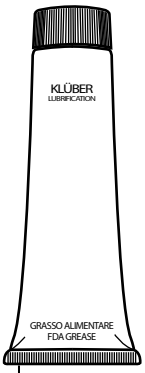

591661 95 gr

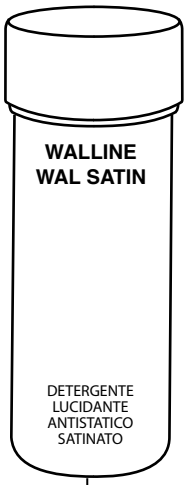

591197

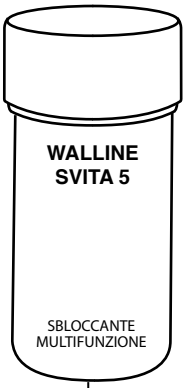

591199

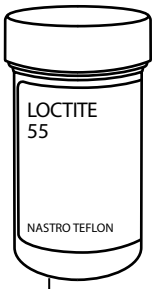

591671

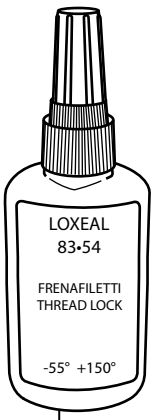

591667 50 ml

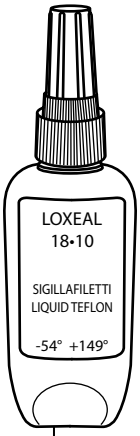

591669 50 ml

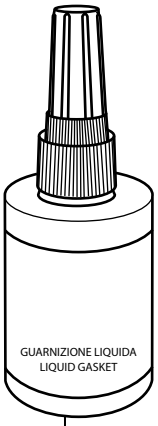

591670 75 ml

PRODOTTI CHIMICI

591194 10 sachets
PULY GRIND CRYSTALS

591205
KIT PULY CAFF NSF

591208 900gr.
PULY CAFF NSF

591209 570gr.
PULY CAFF NSF

591210 370gr.
PULY CAFF NSF

591211 120 sachets
PULY CAFF NSF

591212 510gr.
PULY CAFF GREEN

591213
60 tablets 2,5 gr. each
PULY CAFF NSF

591214
100 tablets 1,35 gr.
PULY CAFF NSF

591215
100 tables 1 gr.
PULY CAFF NSF

591216
70 tables 0,5 gr.
PULY CAFF NSF

591222
120 tables 4 gr.
PULY CAFFBREW NSF

PRODOTTI CHIMICI

591206 1 Lt.
PULY BAR IGIENIC

591207 218 ml.
PULY BAR IGIENIC

591217 200 ml.
PULY GRIND HOPPER

591218 1 Lt.
PULY MILK PLUS NSF

591219 4 doses x 25 ml.
PULY MILK PLUS NSF

591221 2 doses x 125 ml.
PULY DESCALER

VARI COMPONENTI

NASTRO ISOLANTE
ISOTAPE

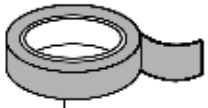

700065
mt.10x15mm

CAVO UNIPOLARE ISOLATO GOMMA SILICONE
UNIPOLAR SILICON-RUBBER INSULATED CABLE

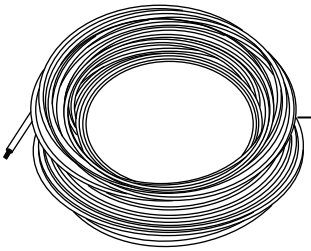

620717 MARRONE - BROWN
620718 GIALLO/VERDE - YELLOW/GREEN
620719 BLU - BLUE
620720 GRIGIO - GREY

700069

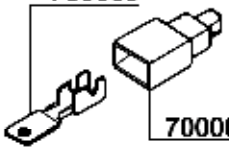

700067

Ø4

700070

700068

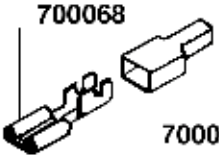

700066

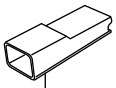

700062

Ø6

700071

CAVO FLESSIBILE NEOPRENE
CABLE FLEXIBLE NEOPRENE

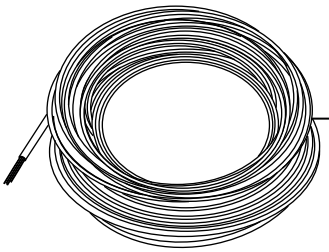

620722 3x2,5 mm
620723 4x2,5 mm

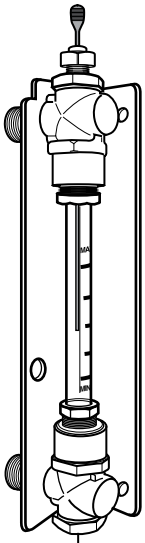

401110
401211 + SONDA

620721 10 mt - Ø 8 mm
GUAINA ELASTOMERO ROSSA

620432 =COMPLETE

ELETTROVALVOLA
SOLENOID VALVE
700668 =V220
700668/11=V110
700668/24=V24

ACQUA CALDA
HOT WATER

3/8
1/4
1/4
1/4
BOILER

620433
WATER PIPE

70
96
145

VARI COMPONENTI

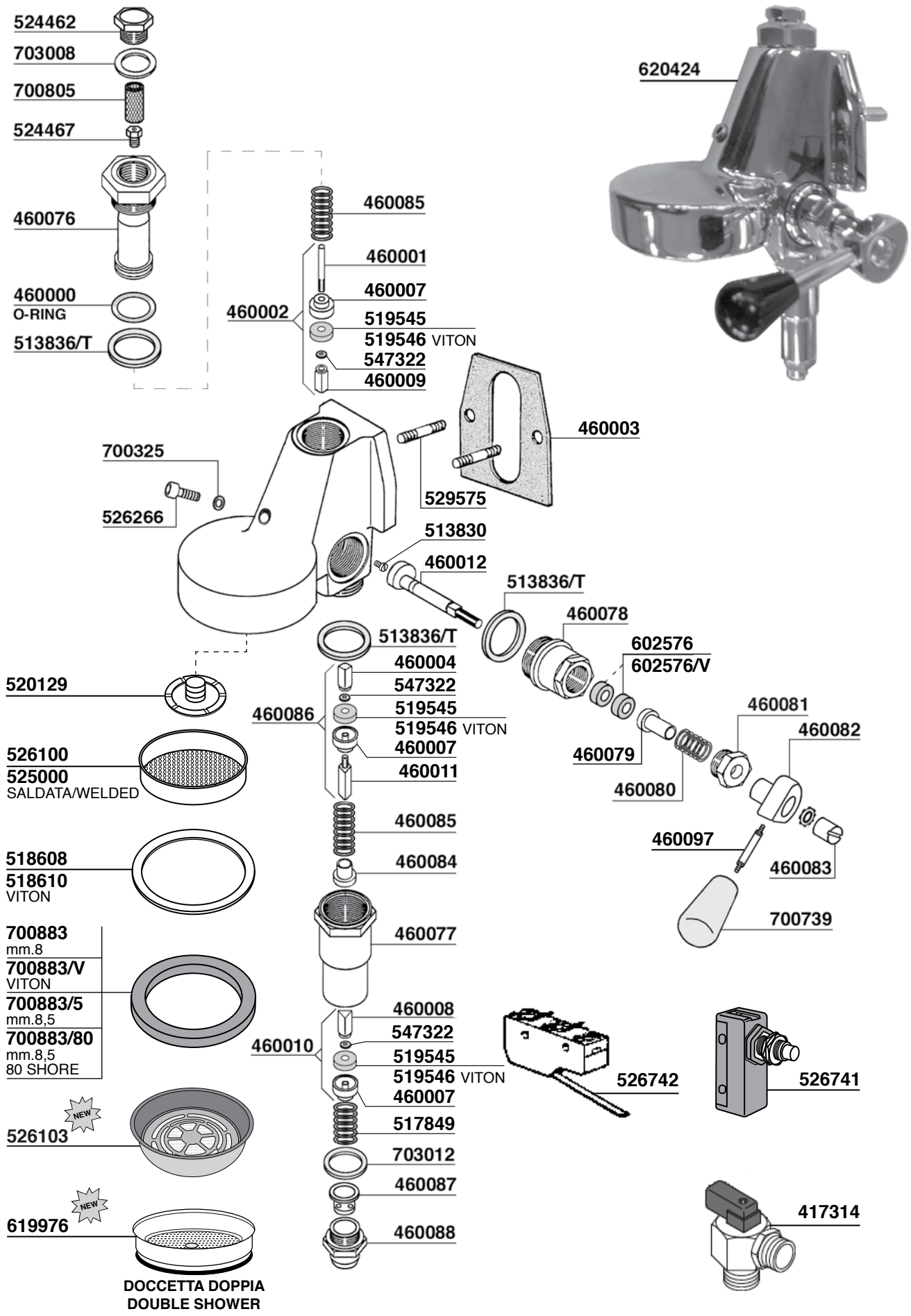

VARI COMPONENTI

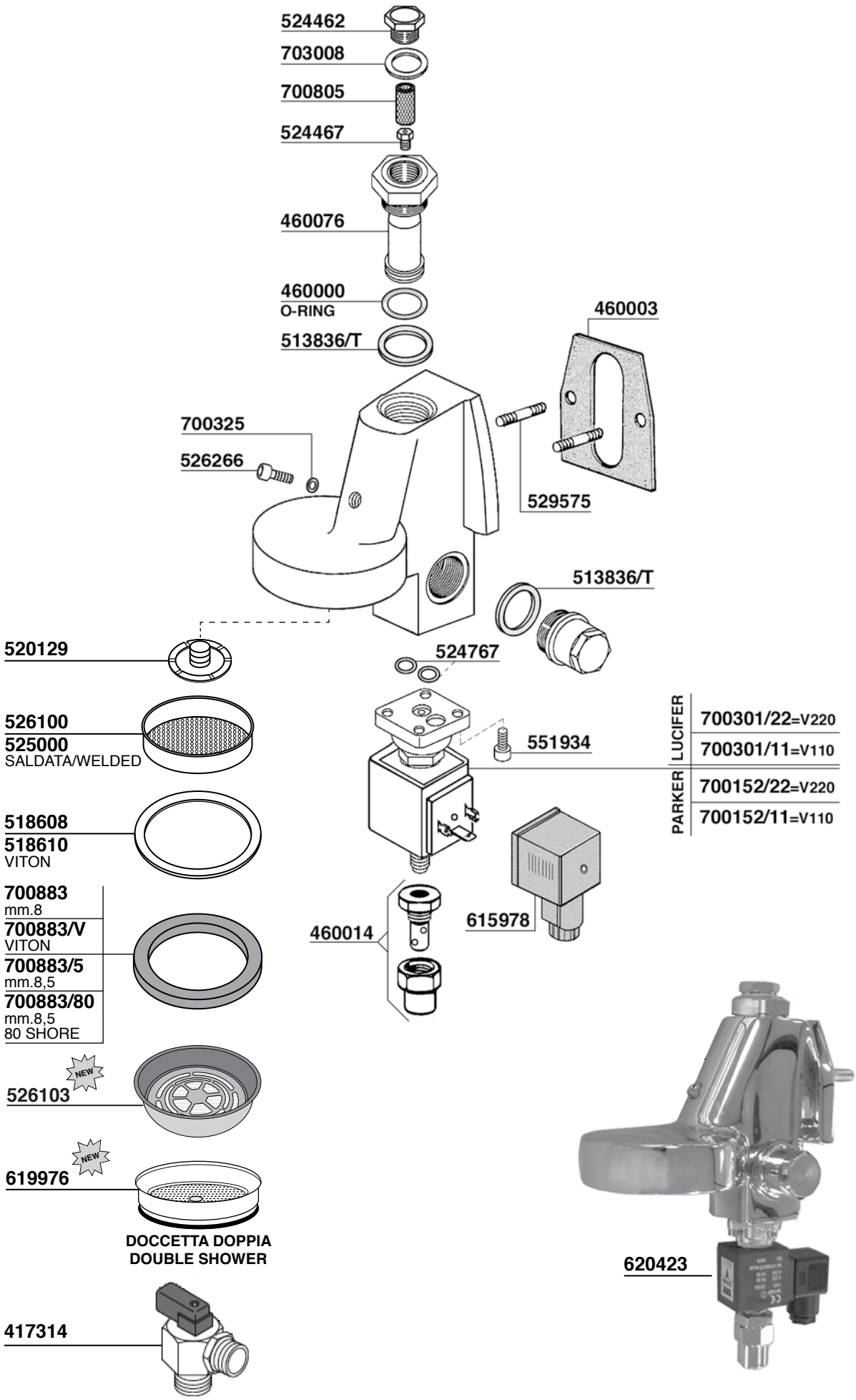

VARI COMPONENTI

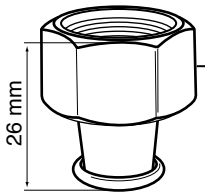

502003 3/8

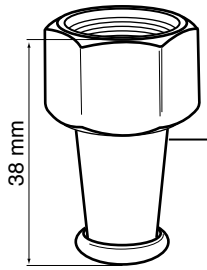

615599 3/8

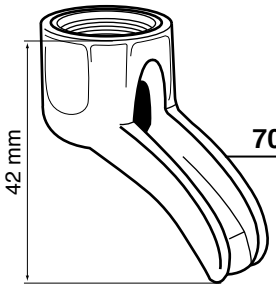

700024 3/8

300202 3/8

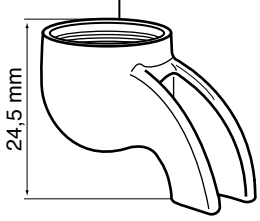

511673 3/8

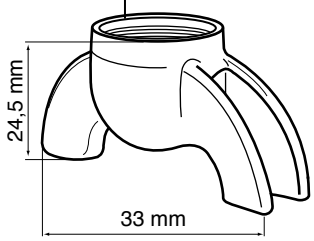

511675 3/8

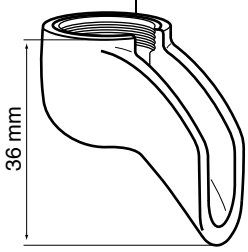

511674 3/8

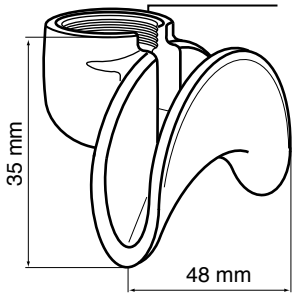

511672 3/8

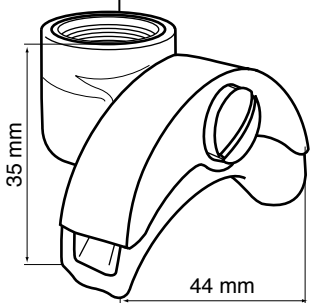

591733 3/8

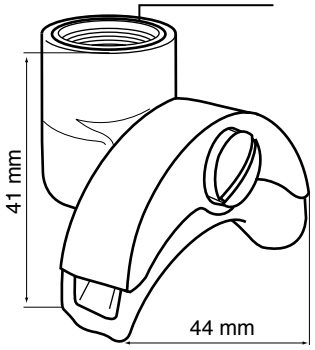

630086 M16
630086/8 3/8

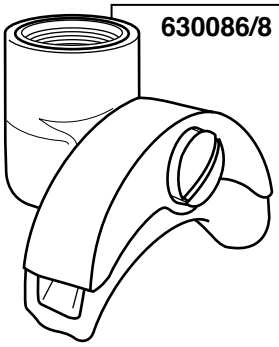

515073

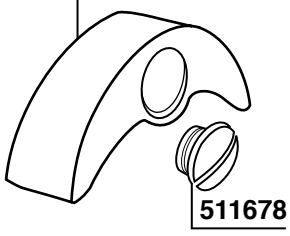

511678

511672/R 3/8

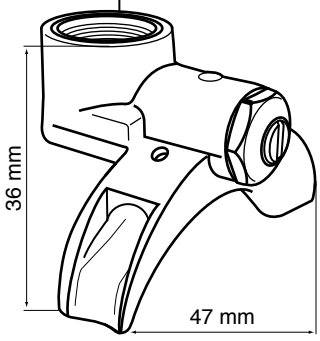

FLUSSO REGOLABILE
ADJUSTABLE FLOW

618522 3/8
3 VIE - 3 WAYS

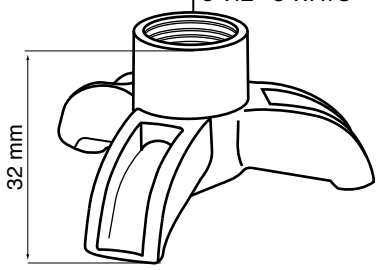

630085 M16
630085/8 3/8

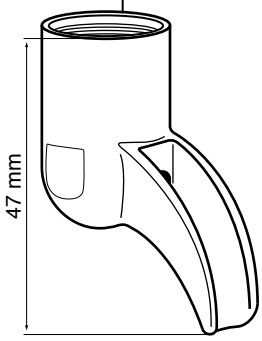

511676 3/8
INOX

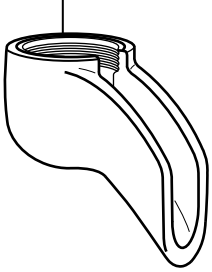

511677 3/8
INOX

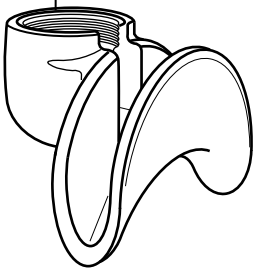

630087 M16
630087/8 3/8

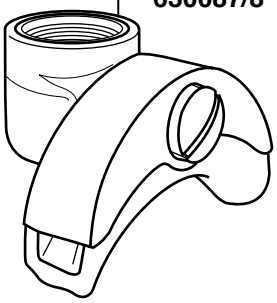

515074

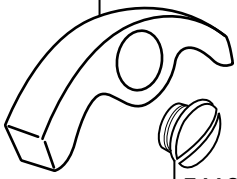

511678

700789 3/8

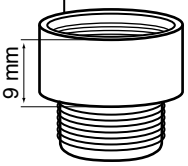

VARI COMPONENTI

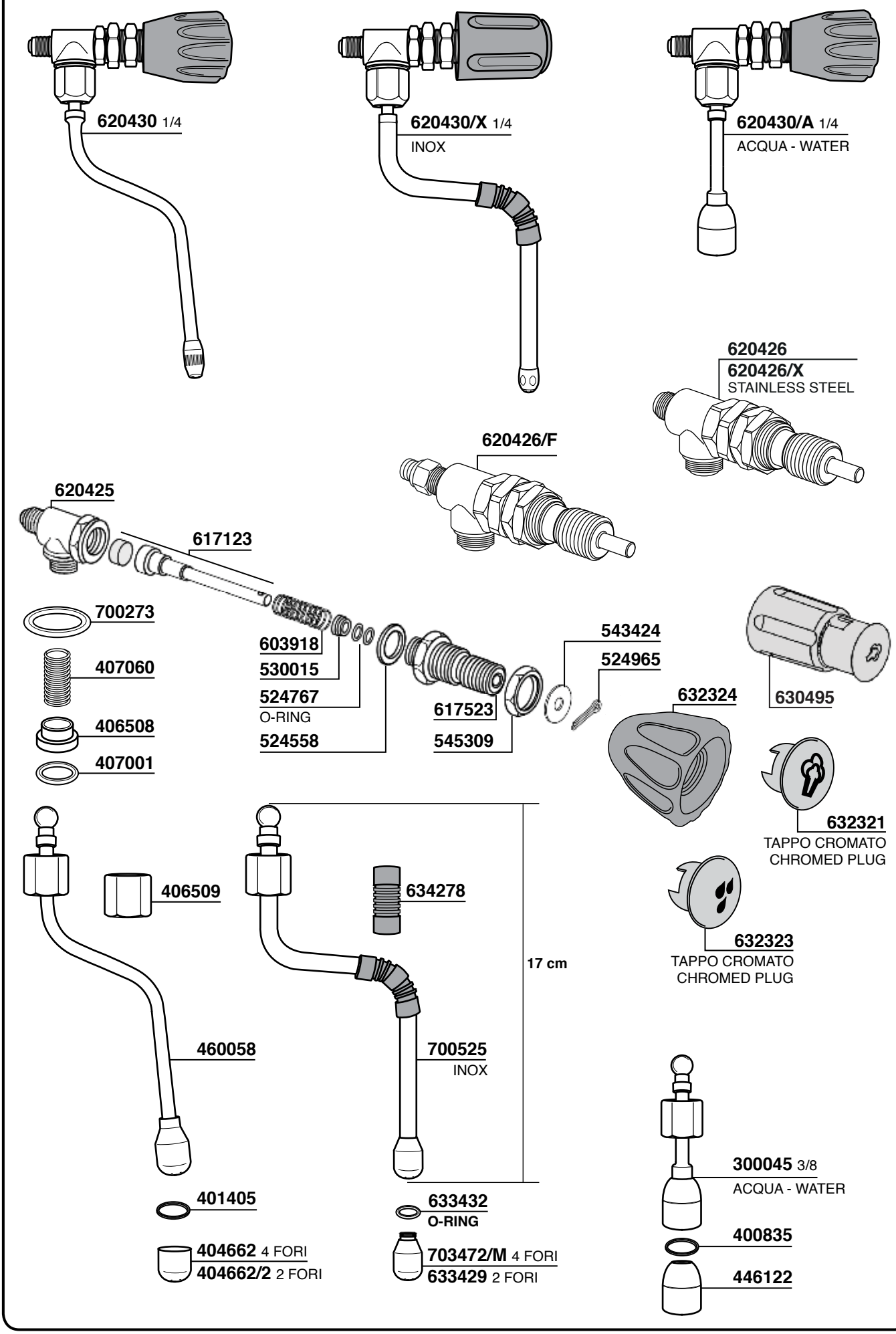

VARI COMPONENTI

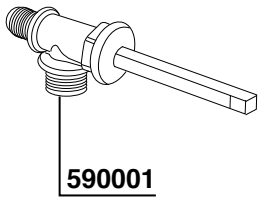

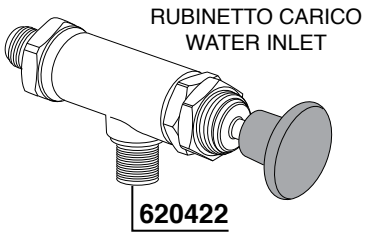

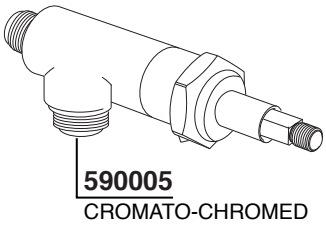

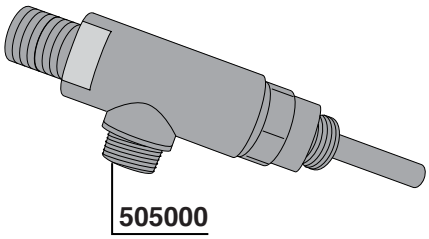

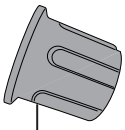

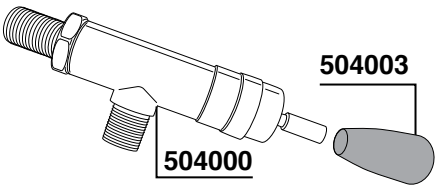

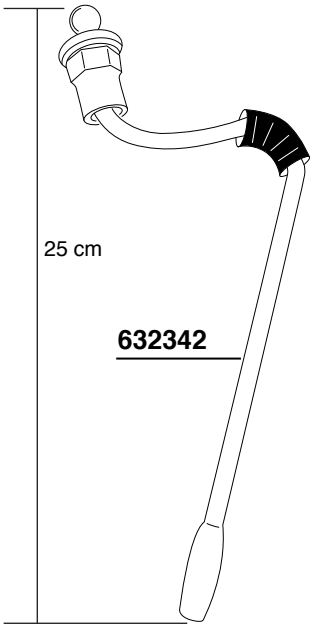

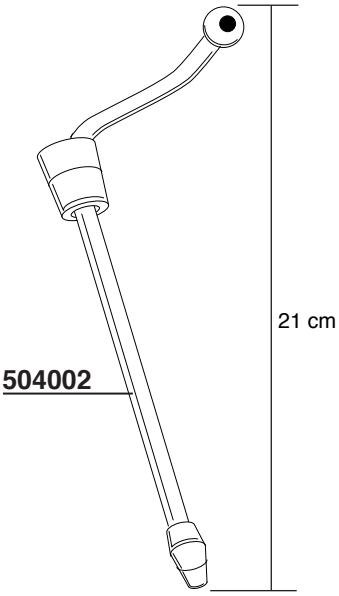

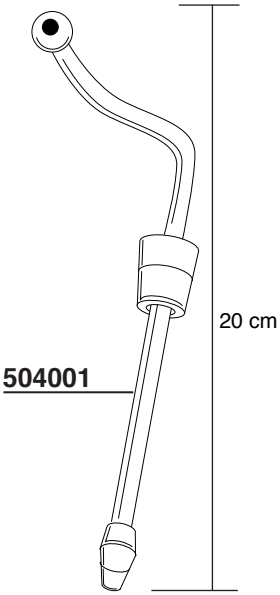

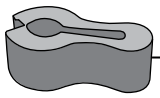

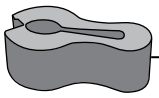

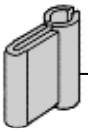

VARI COMPONENTI

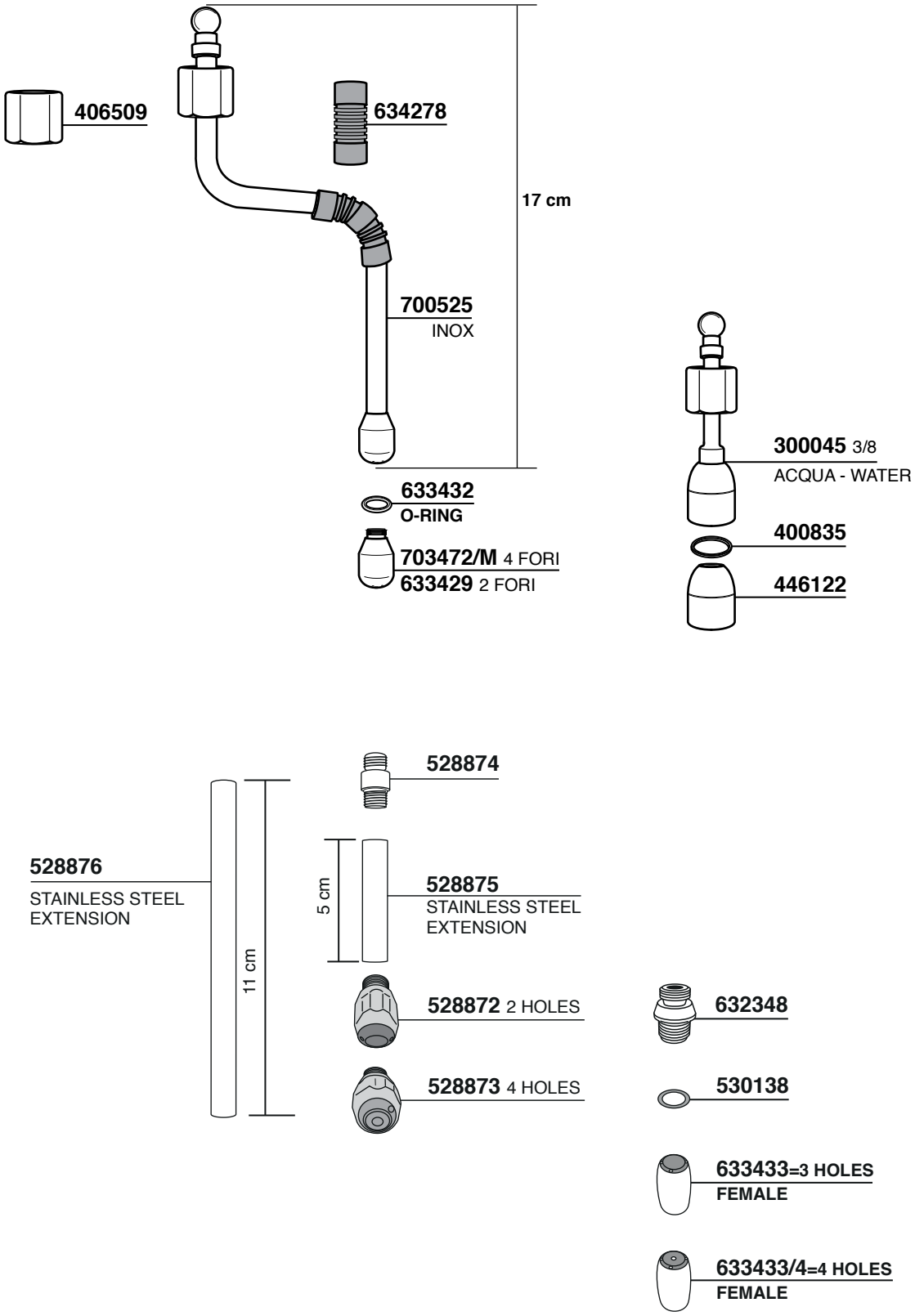

VARI COMPONENTI

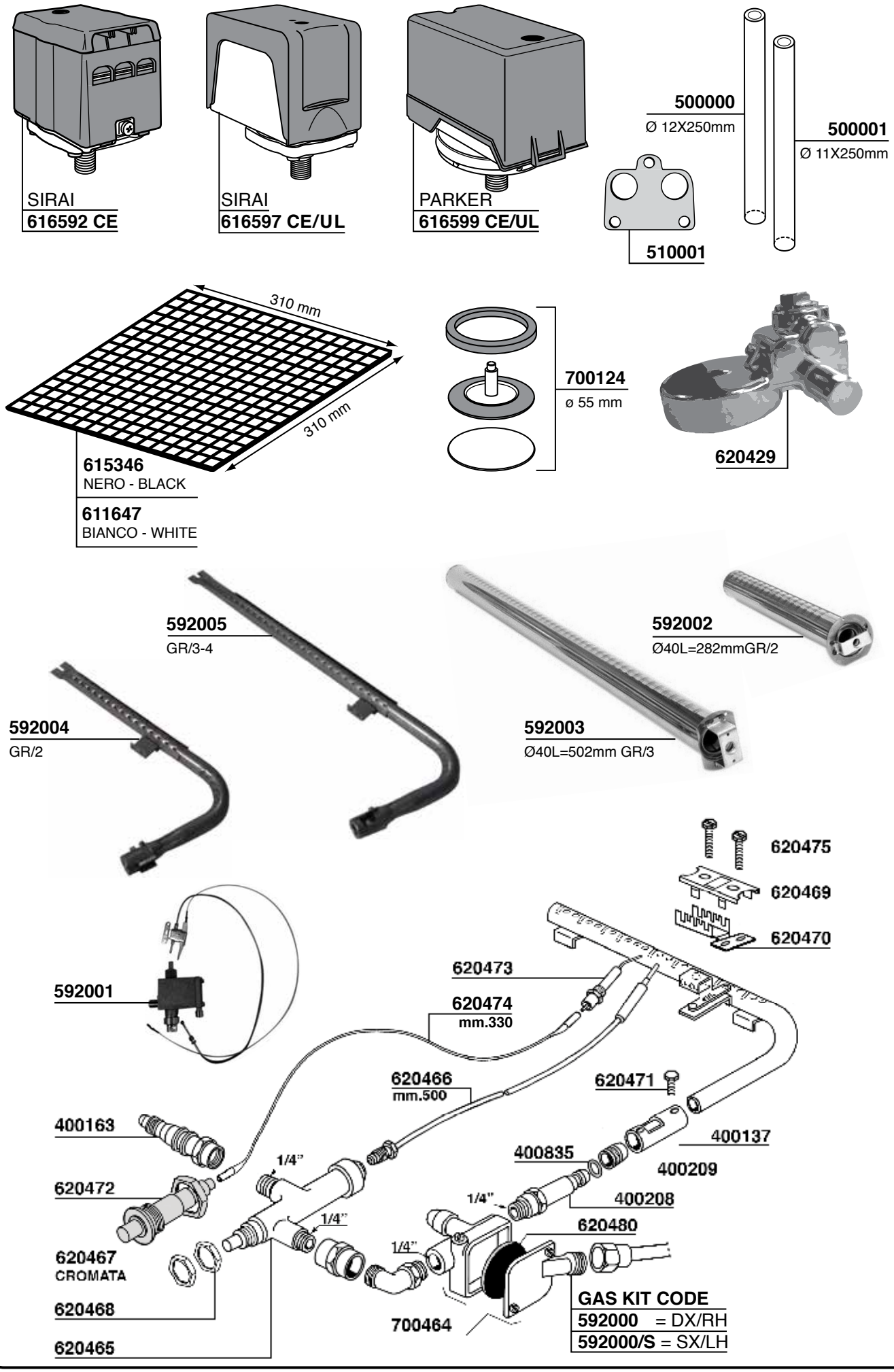

VARI COMPONENTI

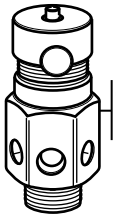

615624/A CE certificato certified

3/8

524555

615625/A CE certificato certified

3/8

524555

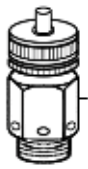

615626/A CE certificato certified

1/2

524552/R

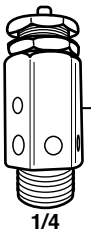

615623/A CE certificato certified

1/4

524554

700217

3/8

524555

700857

M22

700898

618968

1/4

524554

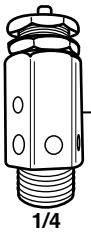

615623

1/4

524554

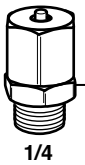

700750/V

1/4

524554

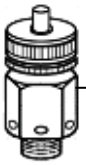

700268

M19

524556

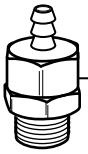

618969

ø 8

1/4

524554

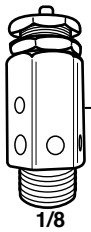

615631/A CE certificato certified

1/8

700231

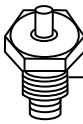

618970

1/4

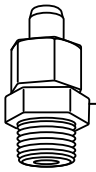

581788

1/4

700375

3/8

524555

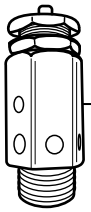

615631

1/8

700231

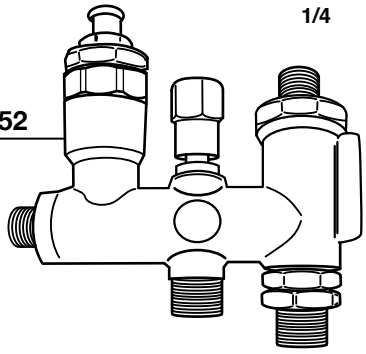

503052

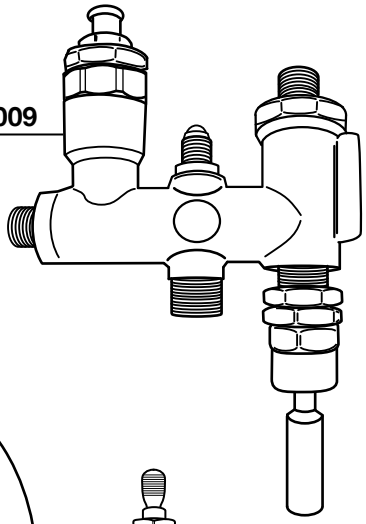

503009

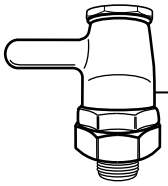

617971

1/8

700231

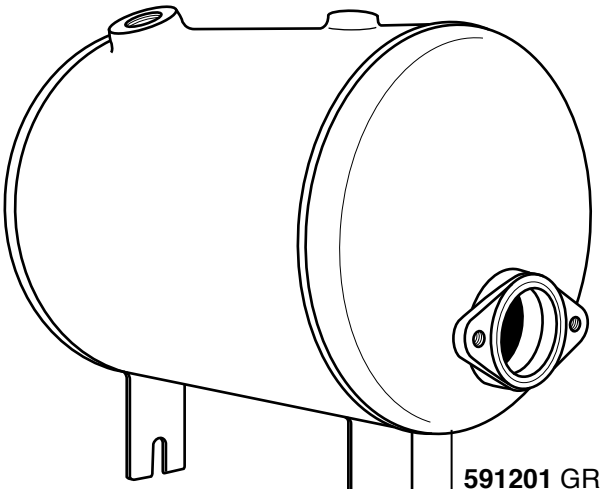

BOILER RAME E61
E61 COPPER BOILER

591201 GR1
591202 GR2
591203 GR3

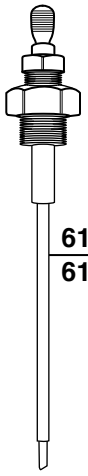

612601 120 mm
612601/L 140 mm

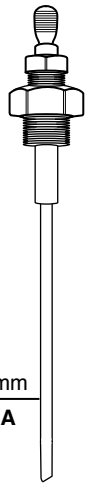

503005 165 mm
SENZA GUAINA

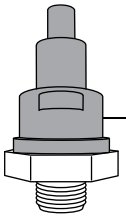

618967

524554

VARI COMPONENTI

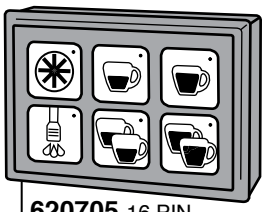

620705 16 PIN
GICAR CODE 9.9.09.28

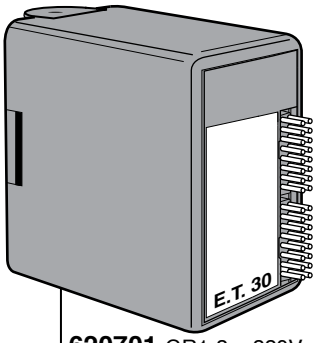

620701 GR1-2 - 220V - 16 PIN
THE + AUTOLIVELLO
GICAR CODE 9.5.24.00

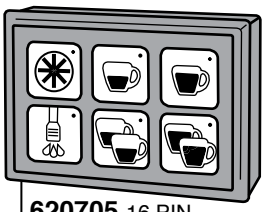

620705 16 PIN
GICAR CODE 9.9.09.28

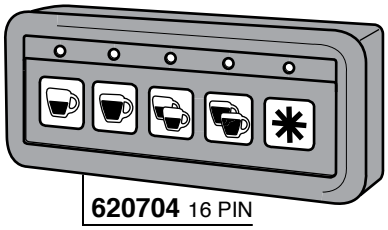

620704 16 PIN
GICAR CODE 9.9.09.50

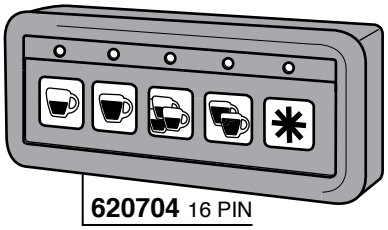

620704 16 PIN
GICAR CODE 9.9.09.50

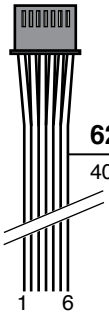

620708
400 mm

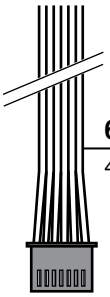

620708
400 mm

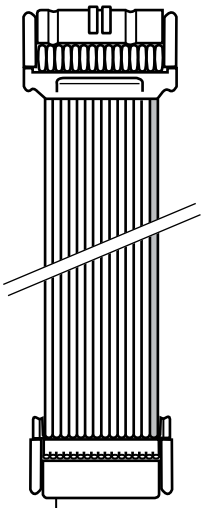

620706 600 mm - 16 PIN
620707 800 mm - 16 PIN

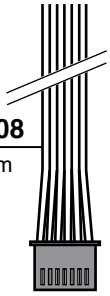

620708
400 mm

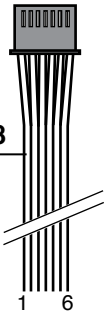

620708
400 mm

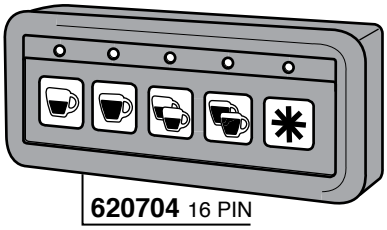

620704 16 PIN
GICAR CODE 9.9.09.50

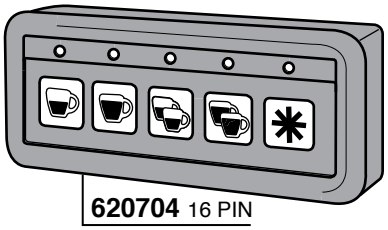

620704 16 PIN
GICAR CODE 9.9.09.50

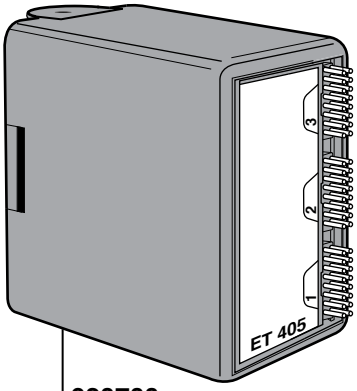

620700 GR1-2-3 - 200V - 16 PIN
THE + AUTOLIVELLO
GICAR CODE 9.5.23.16.00

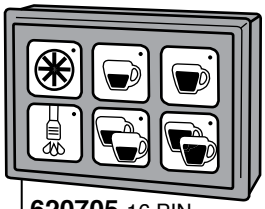

620705 16 PIN
GICAR CODE 9.9.09.28

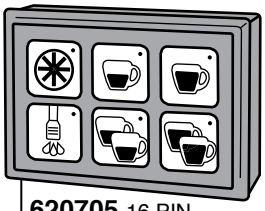

620705 16 PIN
GICAR CODE 9.9.09.28

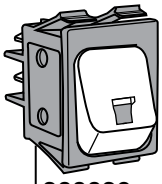

300039
BREW SWITCH

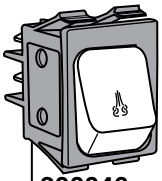

300040
STEAM SWITCH

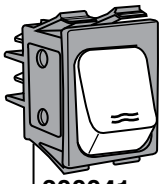

300041
WATER SWITCH

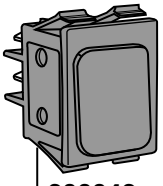

300042
RED LIGHT

VARI COMPONENTI

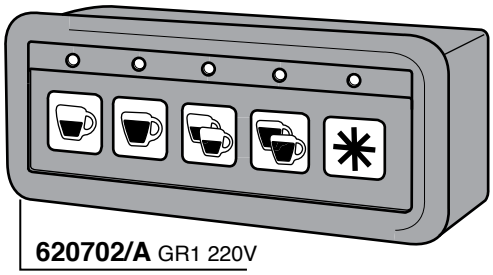

620702/A GR1 220V

PULSANTIERA+CENTRALINA+AUTOLIVELLO
TOUCH PAD+ELECTRONIC BOX+AUTOFILL

620714

8 PIN 800 mm

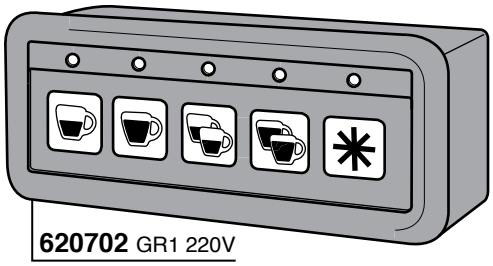

620702 GR1 220V

PULSANTIERA+CENTRALINA+THE
TOUCH PAD+ELECTRONIC BOX+TEA

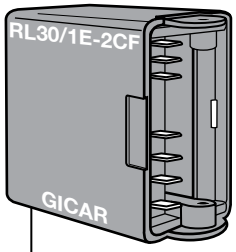

AUTOLIVELLO - AUTOFILL

700737 220V

700737/11 110V

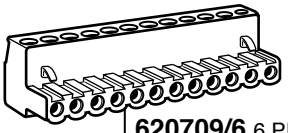

620709/6 6 PIN

410453 7 PIN

620709/10 10 PIN

620709 12 PIN

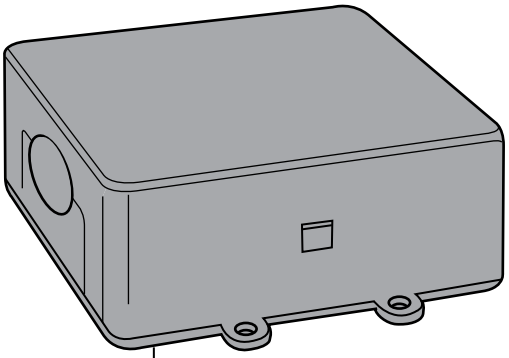

620732

3D5 LC 3GRCT 3TEA 230V

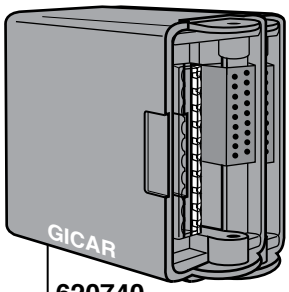

620740

GICAR CODE 9.5.17.80G

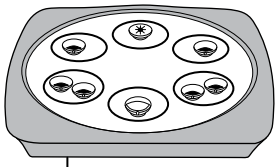

620743

GICAR CODE 9.9.14.68G

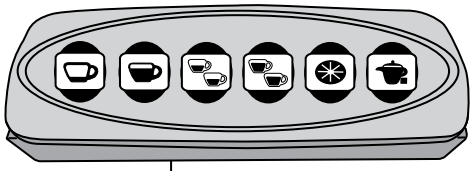

620734

GICAR CODE 9.9.07.41G

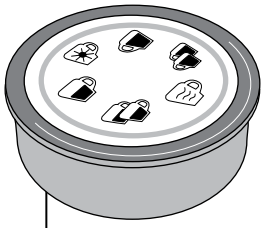

620741

GICAR CODE 9.9.13.26G

620742

GICAR CODE 9.9.13.53G

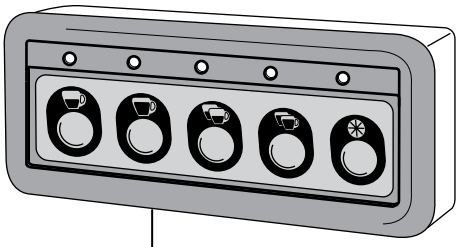

620736 16 PIN

GICAR CODE 9.9.08.83G

VERDE
GREEN

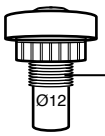

402629

ARANCIO
ORANGE

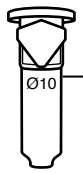

402627

COVER

VERDE
GREEN

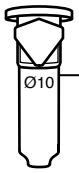

402628

COVER

VERDE
GREEN

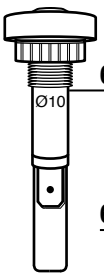

617733 220V

617734 220V

ROSSO
RED

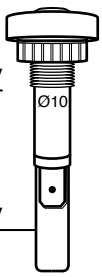

VERDE
GREEN

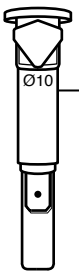

617732 220V

617732/11 110V

617730 220V

617730/11 110V

ROSSO
RED

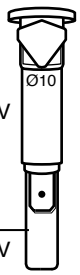

VERDE
GREEN

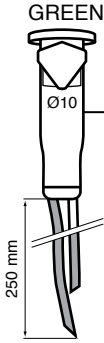

615512 220V

615512/11 110V

615511/22 220V

615511/11 110V

ROSSO
RED

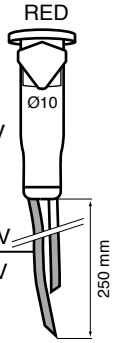

VARI COMPONENTI

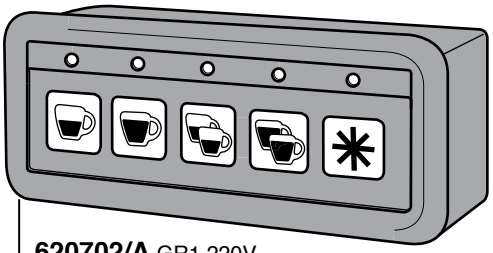

620702/A GR1 220V
PULSANTIERA+CENTRALINA+AUTOLIVELLO
TOUCH PAD+ELECTRONIC BOX+AUTOFILL

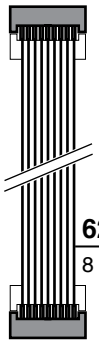

620714
8 PIN 800 mm

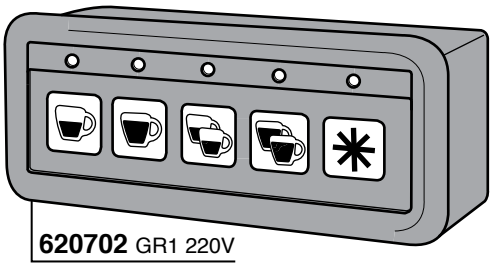

620702 GR1 220V
PULSANTIERA+CENTRALINA+THE
TOUCH PAD+ELECTRONIC BOX+TEA

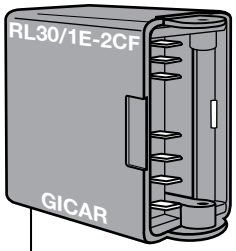

AUTOLIVELLO - AUTOFILL
700737 220V
700737/11 110V

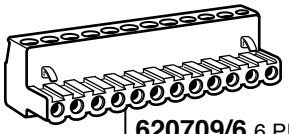

620709/6 6 PIN
410453 7 PIN
620709/10 10 PIN
620709 12 PIN

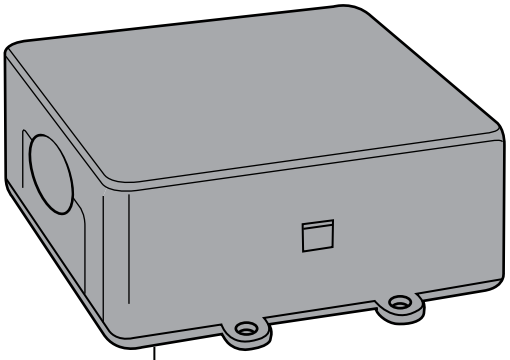

620732
3D5 LC 3GRCT 3TEA 230V

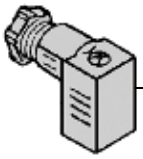

615978/T

300041
THE - TEA

615979

617903/G

530143

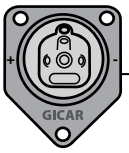

620405/C

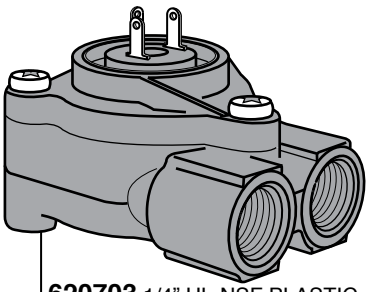

620703 1/4" UL-NSF PLASTIC

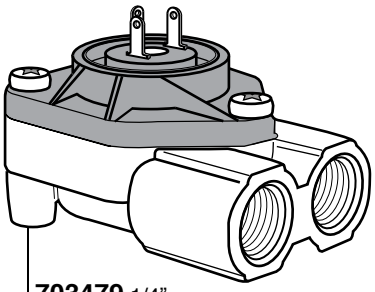

703479 1/4"

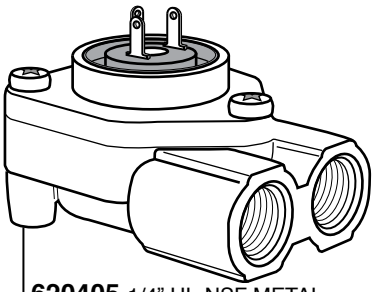

620405 1/4" UL-NSF METAL
620404 1/8" UL-NSF METAL

VERDE
GREEN

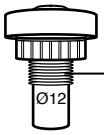

402629

ARANCIO
ORANGE

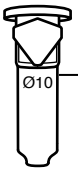

402627
COVER

VERDE
GREEN

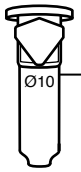

402628
COVER

VERDE
GREEN

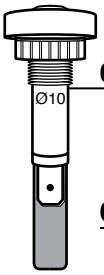

617733 220V

ROSSO
RED

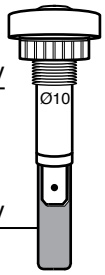

617734 220V

VERDE
GREEN

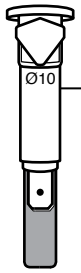

617732 220V
617732/11 110V

ROSSO
RED

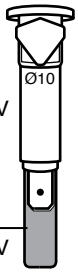

617730 220V
617730/11 110V

VERDE
GREEN

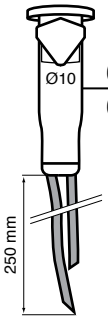

615512 220V
615512/11 110V

615511/22 220V
615511/11 110V

ROSSO
RED

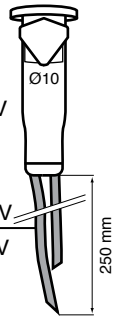

ELETTROVALVOLE

ELETTROVALVOLE 3 VIE TENUTA RUBINO - 3 WAYS SOLENOID VALVES RUBY SEAL GAGGIA

PARKER 0-10bar
700152/22 V220/50/60
700152/11 V110/60

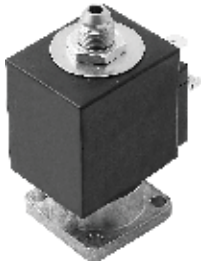

SIRAI 0-10 bar
616598 V208/240/50/60
616598/11 V110/60

PARKER 0-10bar
700153/22 V220/50/60
700153/11 V110/60
700270 V24/50/60

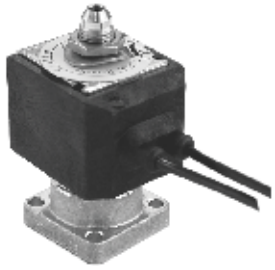

PARKER 0-10 bar
576288/22 V220/50/60
576288/11 V110/60

LUCIFER 0-10 bar
700301/22 V220/50/60
700301/11 V110/60
700301/24 V24/50/60
619276 V24 DC

O D E 0-15 bar
300304 V220/50/60
300304/11 V110/60
300304/24 V24/50/60

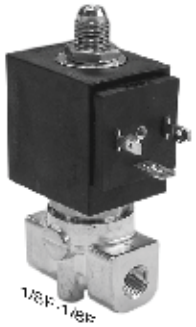

O D E 0-15 bar
300065 V220/50/60
300065/11 V110/60

CROMATA-CHROMATE

ROSSI 0-10 bar
409519 V220/50
411746 V220/60

ACCIAIO - STEEL

PARKER 0-10 bar
700174 V220/50/60
700174/11 V110/60
700174/24 V24/50/60

LUCIFER 0-14 bar
700175 V220/50/60
700175/11 V110/60
700175/24 V24/50/60

SIRAI 0-14 bar
616581 V240/60

SIRAI 0-20 bar
616582 V230/50/60

TENUTA VITON - VALVES VITON SEAL

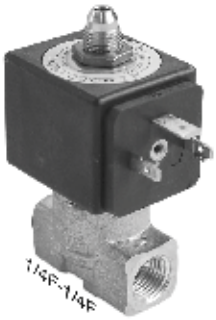

PARKER 0-10 bar
632018/22 V220/50/60
632018/11 V110/60
632018/24 V24/50/60

OLAB 0-14 bar
401984 V220/50/60
401984/11 V110/60

SIRAI 0-20 bar
616593 V230/50/60

SIRAI 0-30 bar
616594 V220/50

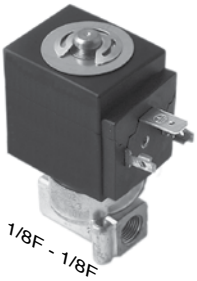

SIRAI 0-20 bar
616595 V220/50

ELETTROVALVOLE

2 WAYS SOLENOID VALVES VITON SEAL

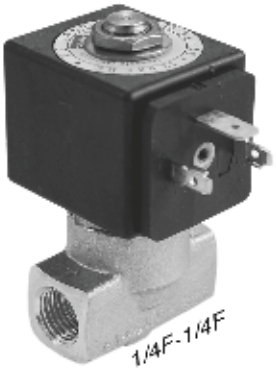

PARKER ø 2,5
632017/22 V220/50/60
632017/11 V110/60
632017/24 V24/50/60

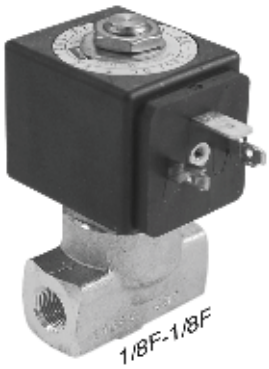

PARKER ø 2,5
700869/22 V220/50/60
700869/11 V110/60
700869/24 V24/50/60

PARKER ø 2,5
634294/22 V220/50/60
634294/11 V110/60
634294/24 V24/50/60

PARKER
601604 V220/50/60

LUCIFER ø 2,5
700668 V220/50/60
700668/11 V110/60
700668/24 V24/50/60

ADJUSTABLE
O D E ø 0÷2,5
560066 V220/50/60
560066/11 V110/60

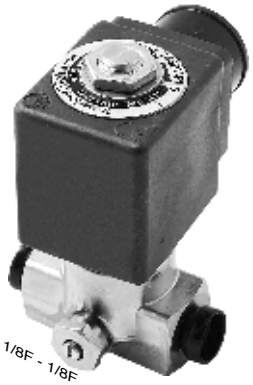

ADJUSTABLE
PARKER ø 1,5
616580 V220/50/60

O D E
300235 V220/50/60
300235/11 V110/60

OLAB ø 2
401893 V220/50
401894 V110/60

PARKER ø 2,5
700872

LUCIFER ø 2,5
700670

PARKER ø 2,5
632019

M & M ø 1,5
700253/22 V220/50/60
700253/11 V110/60
700253/24 V24/50/60

M & M ø 1,5
619139/22 V220/50/60
619139/11 V110/60

ELETTROVALVOLE

PARTI MECCANICHE 3 VIE TENUTA RUBINO - 3 WAYS SOLENOID VALVES BODY RUBY SEAL

GAGGIA

PARKER 0-10bar
700177

PARKER 0-10bar
700158

LUCIFER 0-10bar
700176

O D E 0-15bar
300305

PARKER
700179/22 V220/50/60
700179/11 V110/60
700156 V24/50/60
591753 V24 DC

O D E
300015 V220/50/60
300015/11 V110/60
300015/24 V24/50/60

LUCIFER
700181/22 V220/50/60
700181/11 V110/60
700181/24 V24/50/60

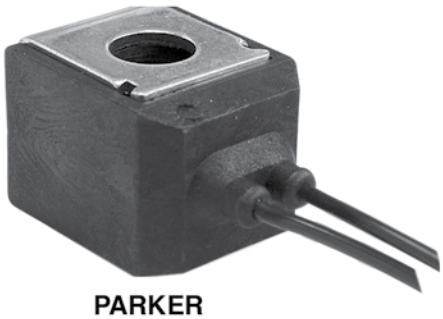

PARKER
700189/22 V220/50/60
700189/11 V110/60

OLAB
401895 V220/50/60
401896 V110/60

M & M
700648/22 V220/50/60
700648/11 V110/60
700648/24 V24/50/60

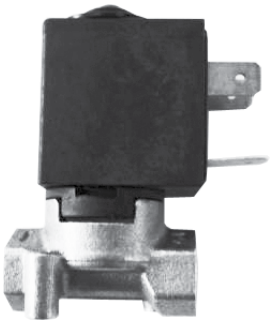

601602 V230/50

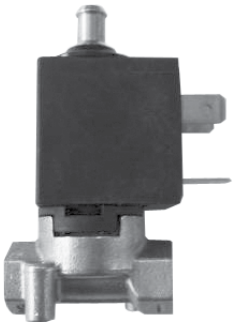

601603 V220/50

NUOVA RICAMBI MACINACAFFE' Tav. 01

ANFIM MODEL: HAUS

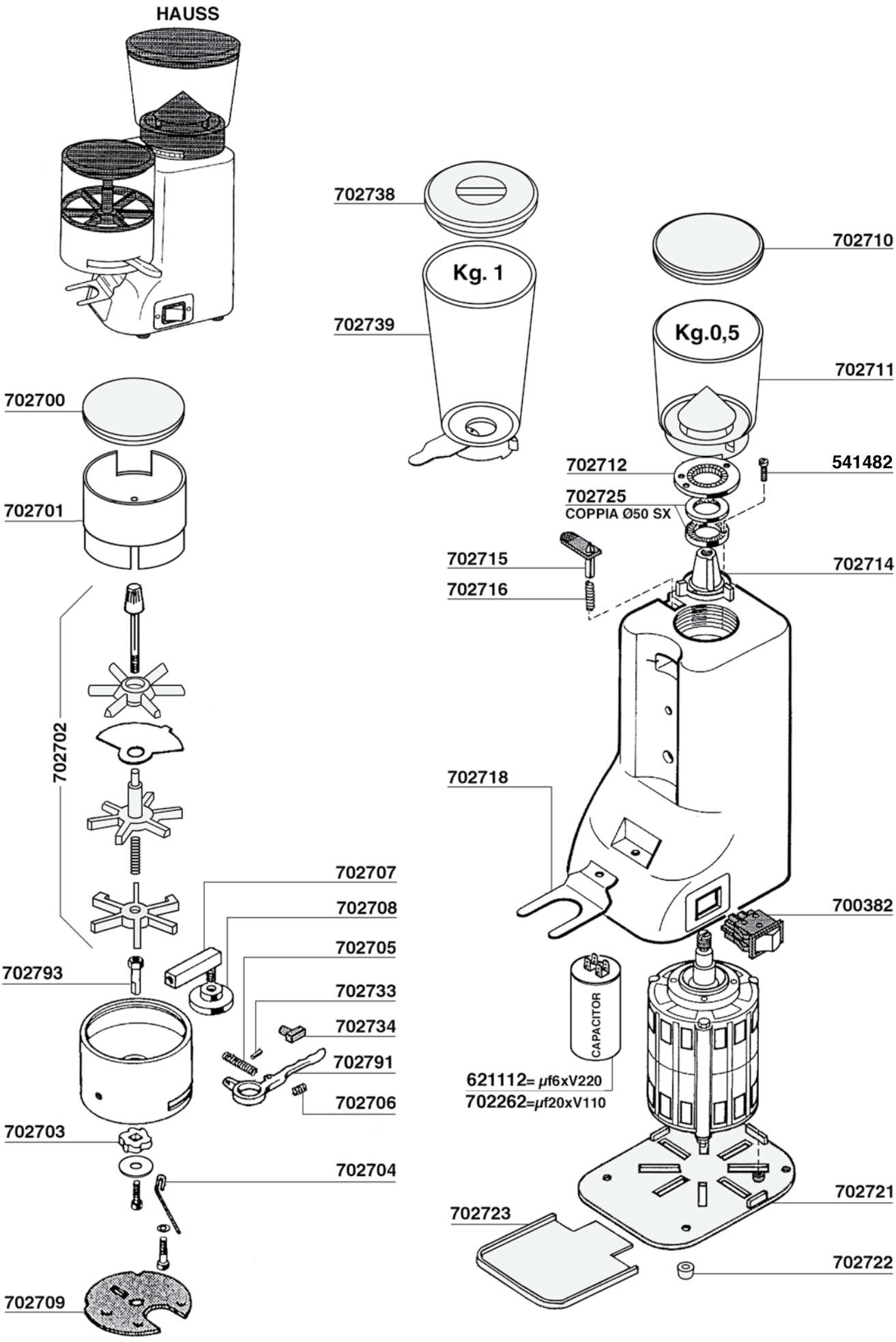

MACINACAFFE'

ANFIM MODEL: HAUS SELF

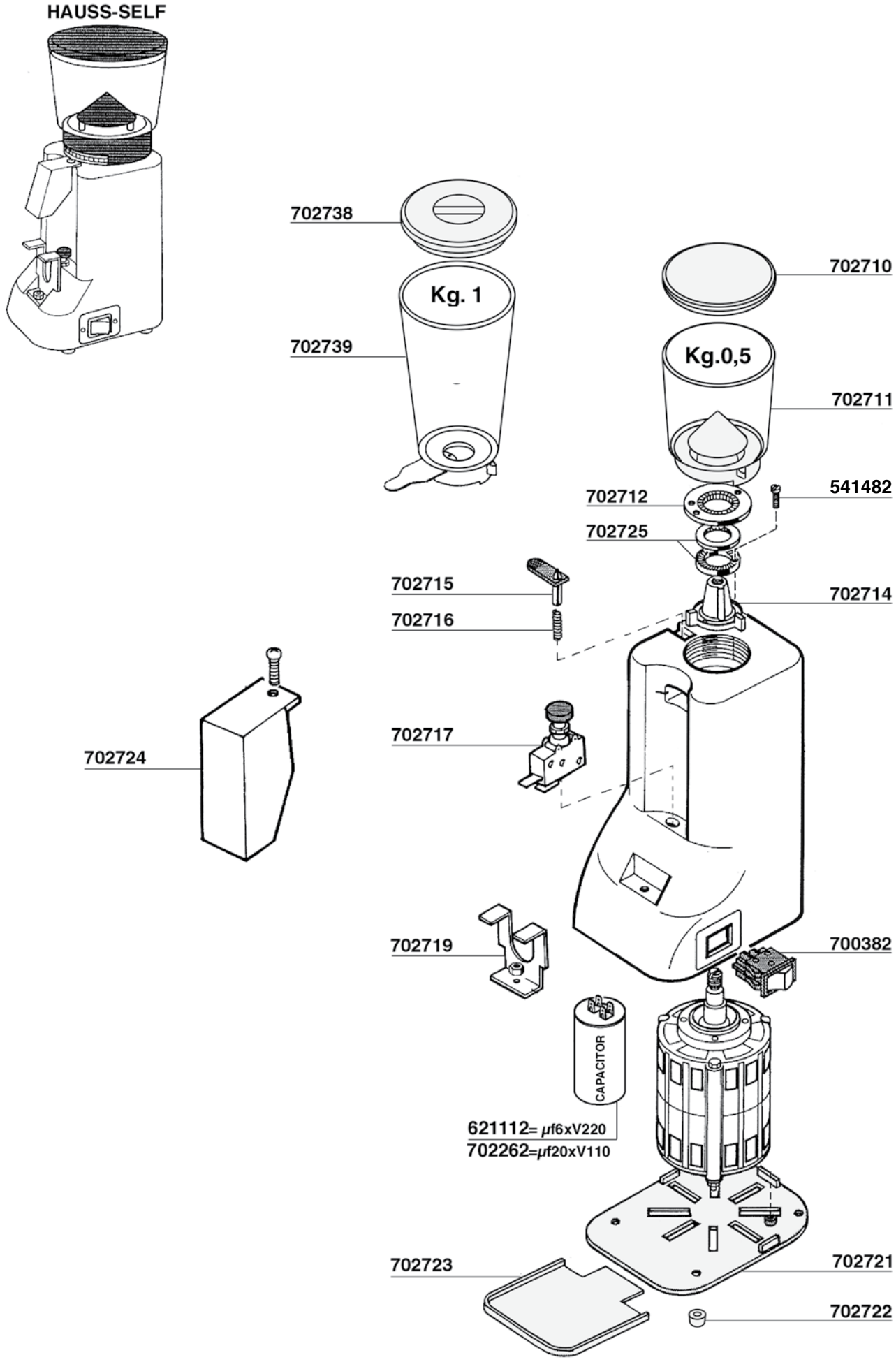

MACINACAFFE'

ANFIM MODEL: BEST

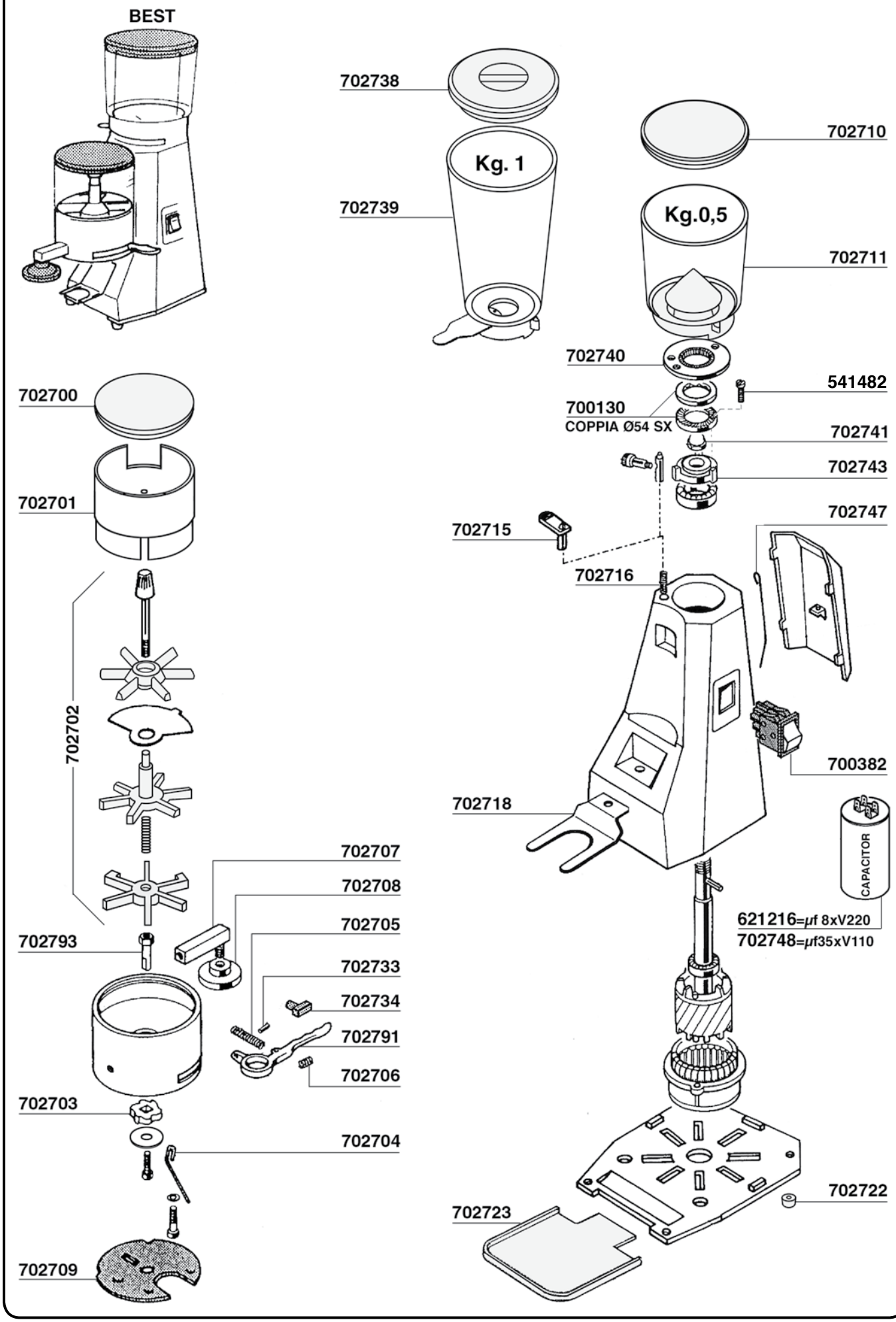

MACINACAFFE'

Tav. 04

ANFIM MODEL: SUPER BEST

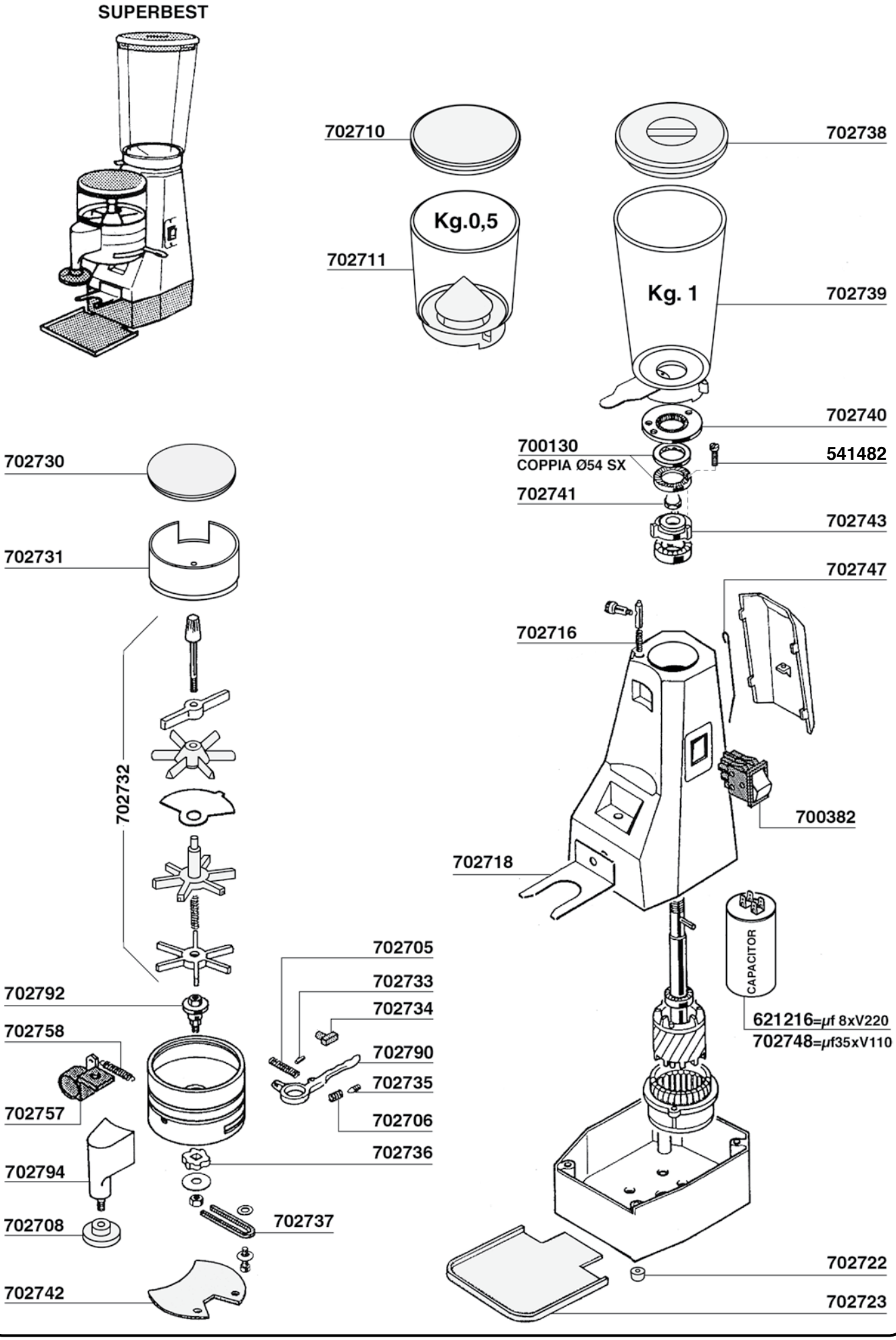

MACINACAFFE'

ANFIM MODEL: LUSSO

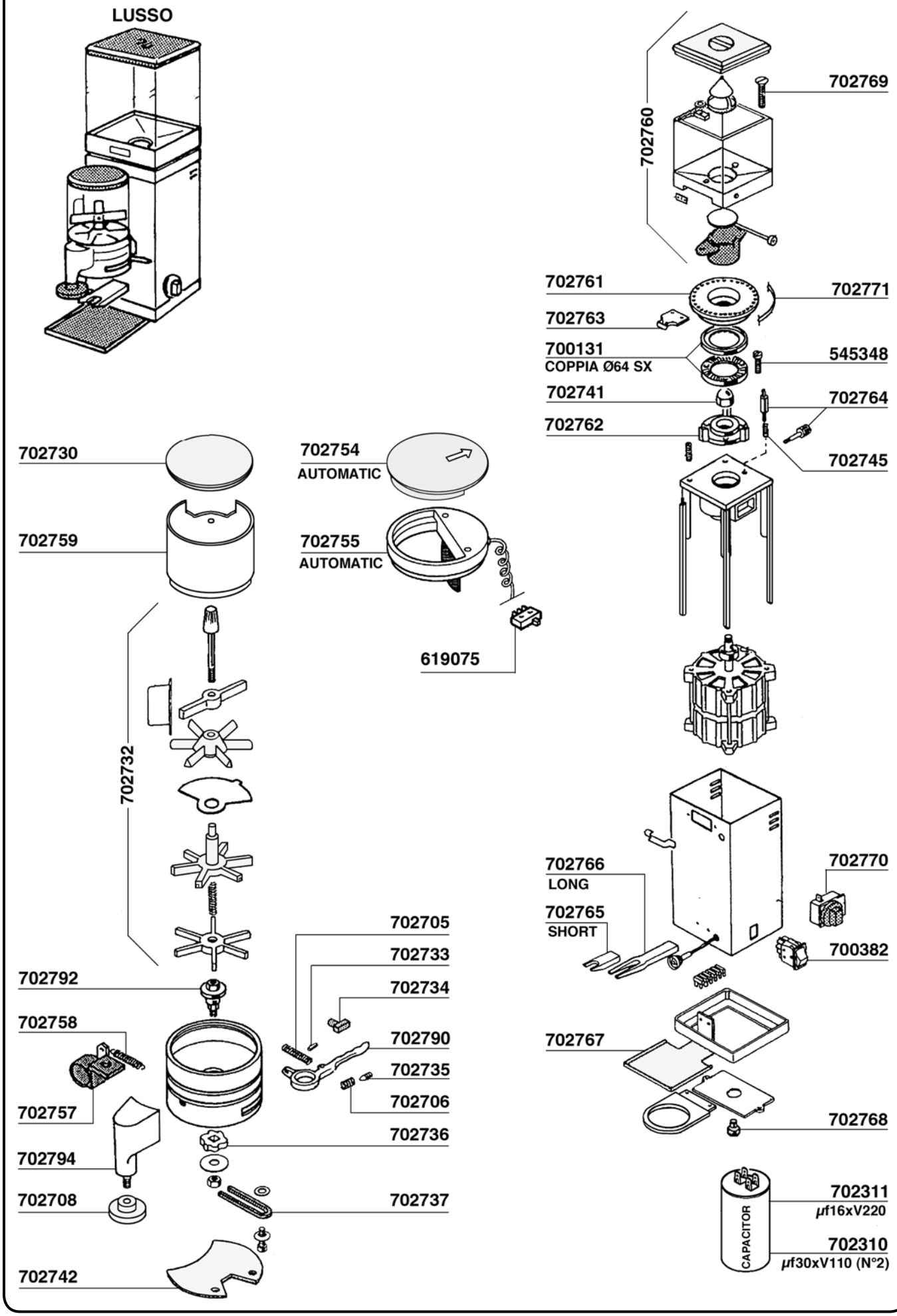

MACINACAFFE'

Tav. 06

ANFIM MODEL: SUPER LUSSO

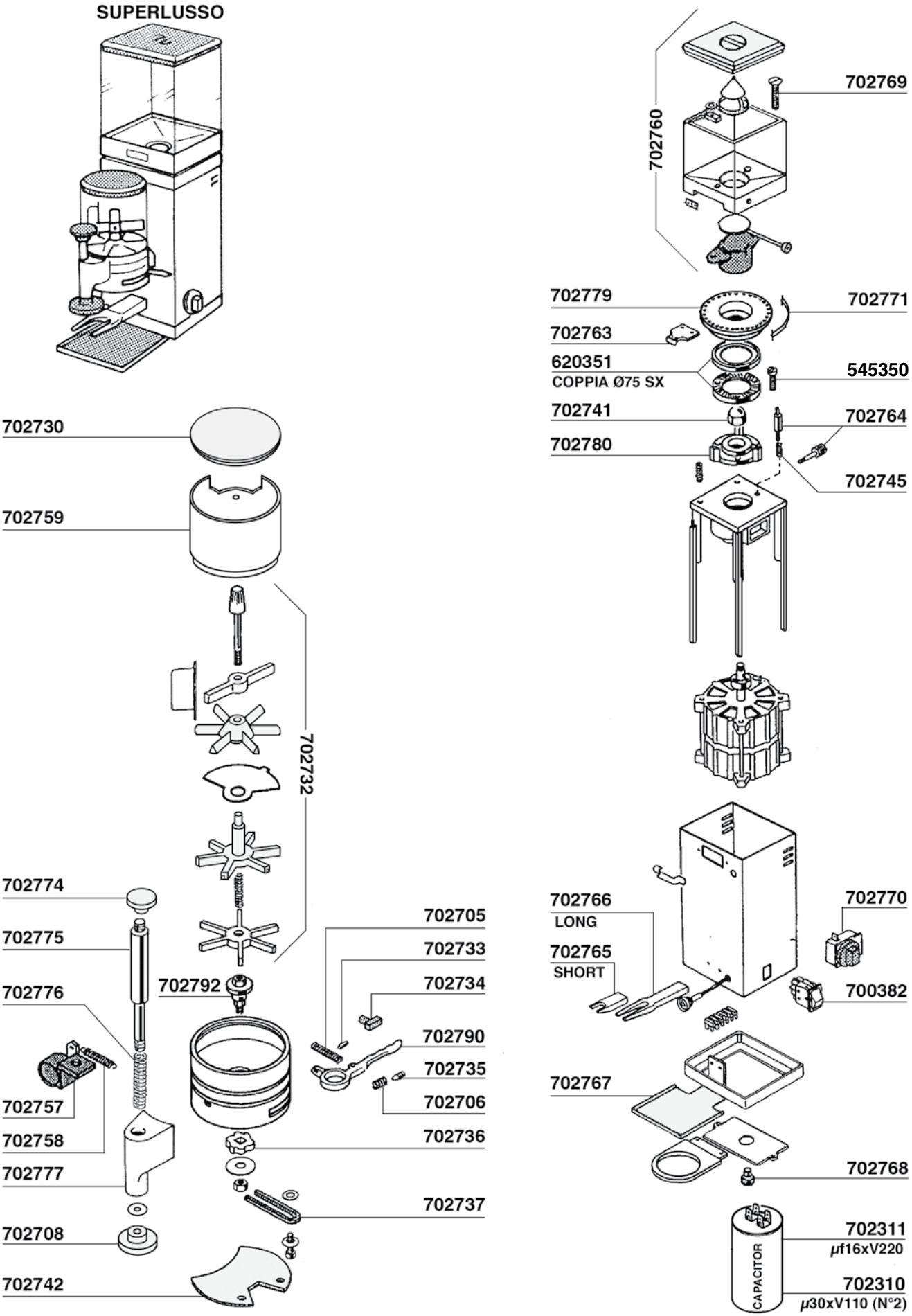

MACINACAFFE

ANFIM MODEL: CAIMANO

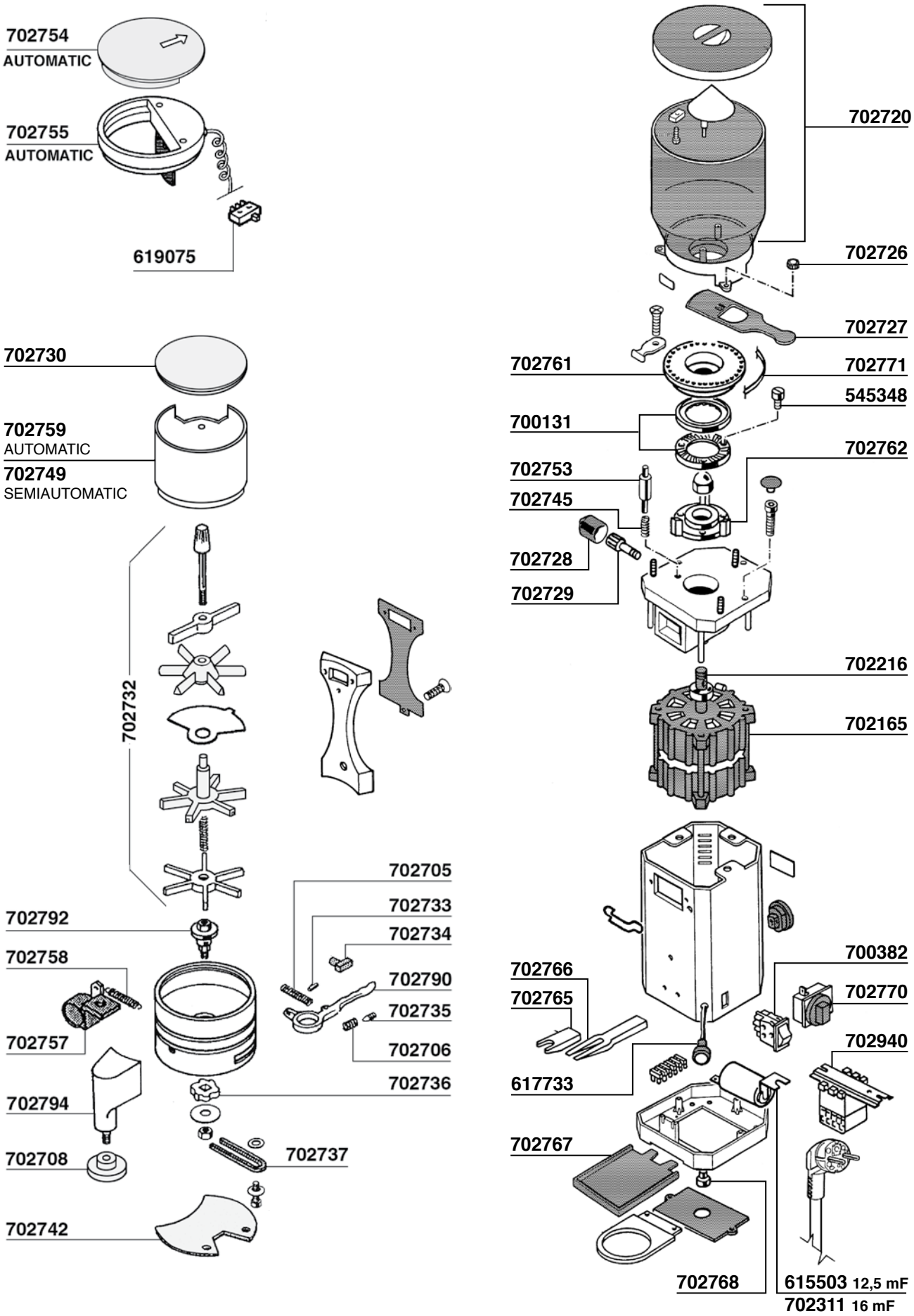

MACINACAFFE

ANFIM MODEL: SUPER CAIMANO

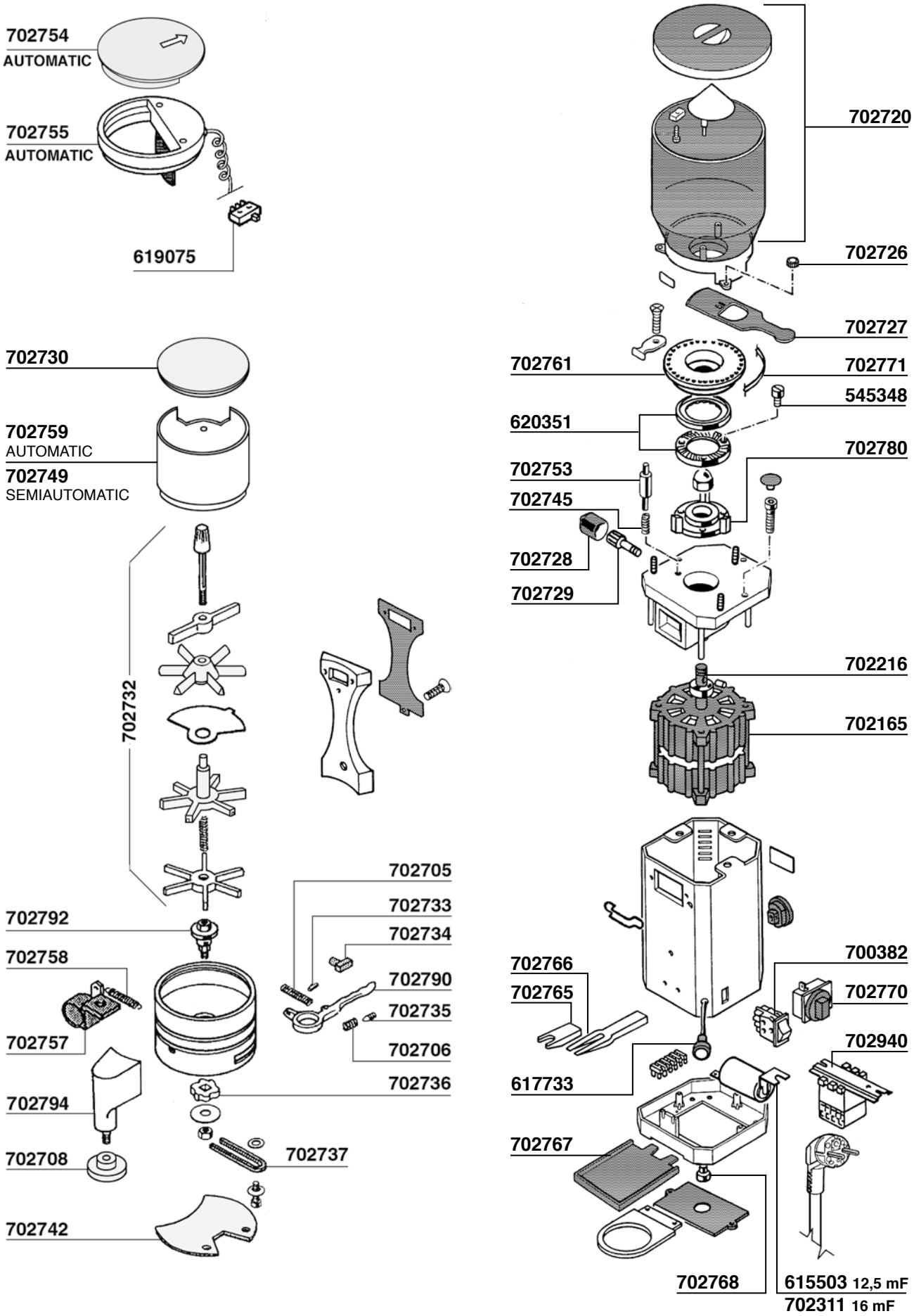

MACINACAFFE'

COMPAK

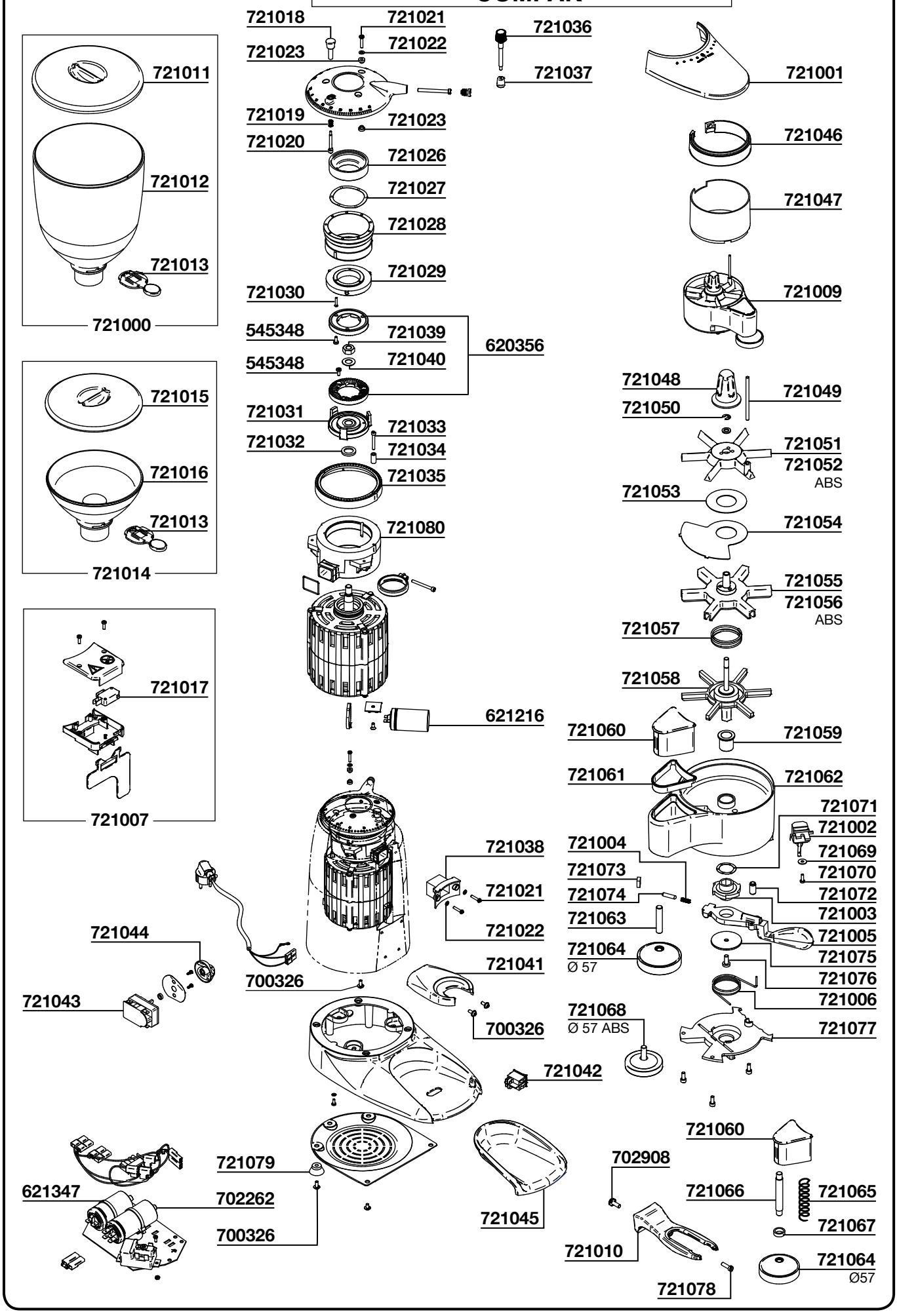

MACINACAFFE'

Tav. 10

EUREKA MODEL MDM - MDMCA - MDME - MDMEA

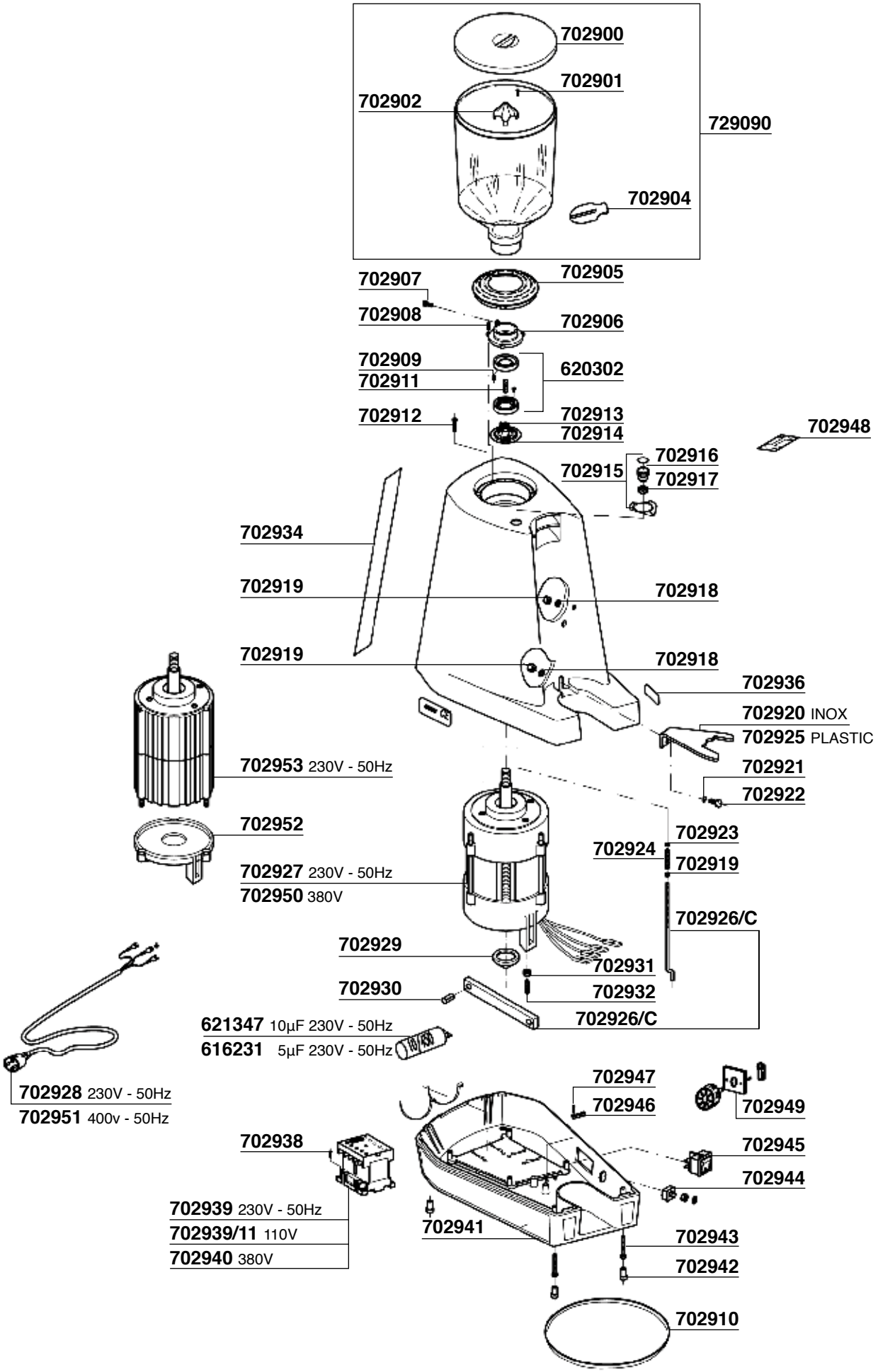

EUREKA MODEL: MDM - MDMCA - MDME - MDMEA

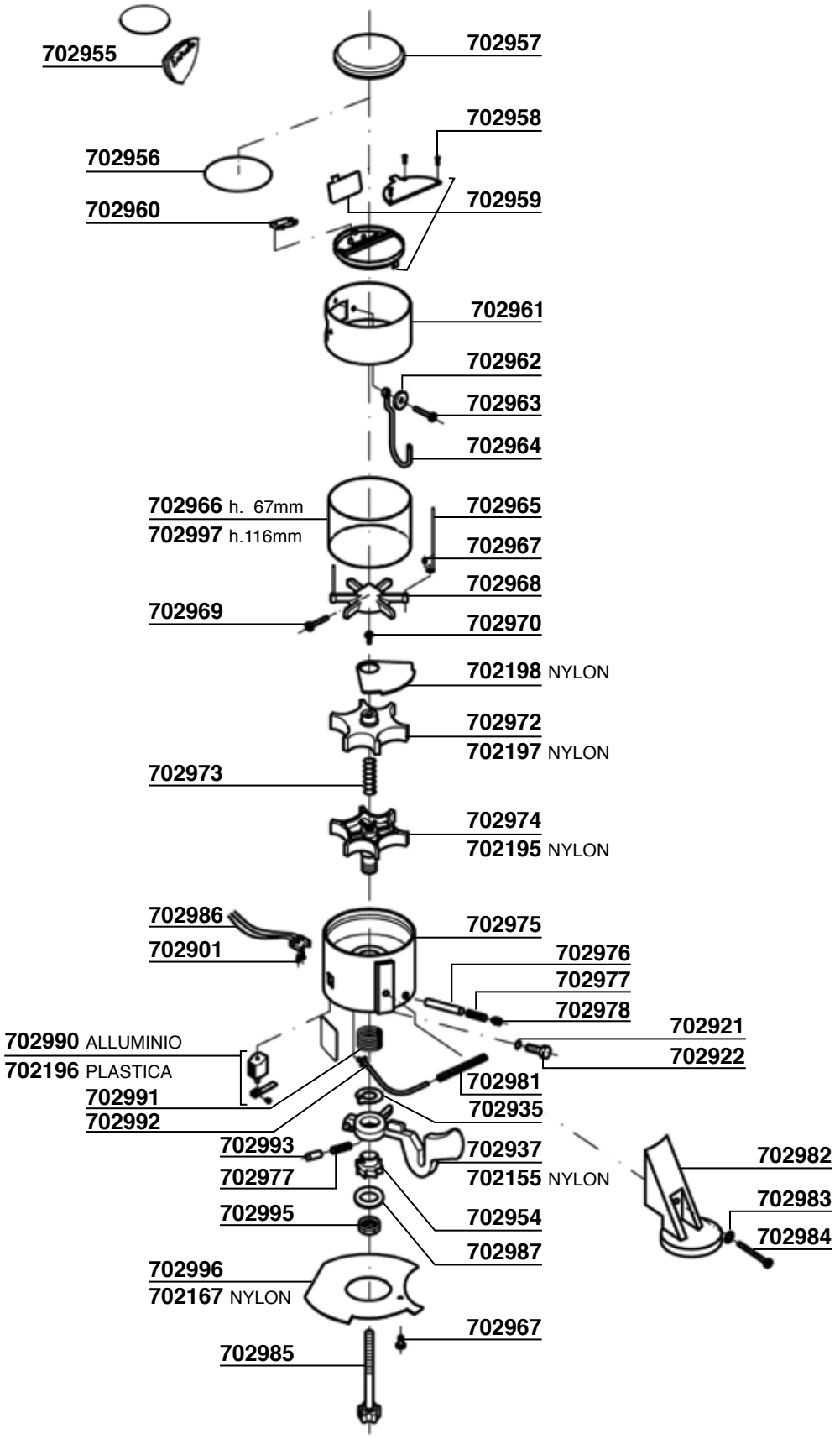

MACINACAFFE'

EUREKA MODEL MCF

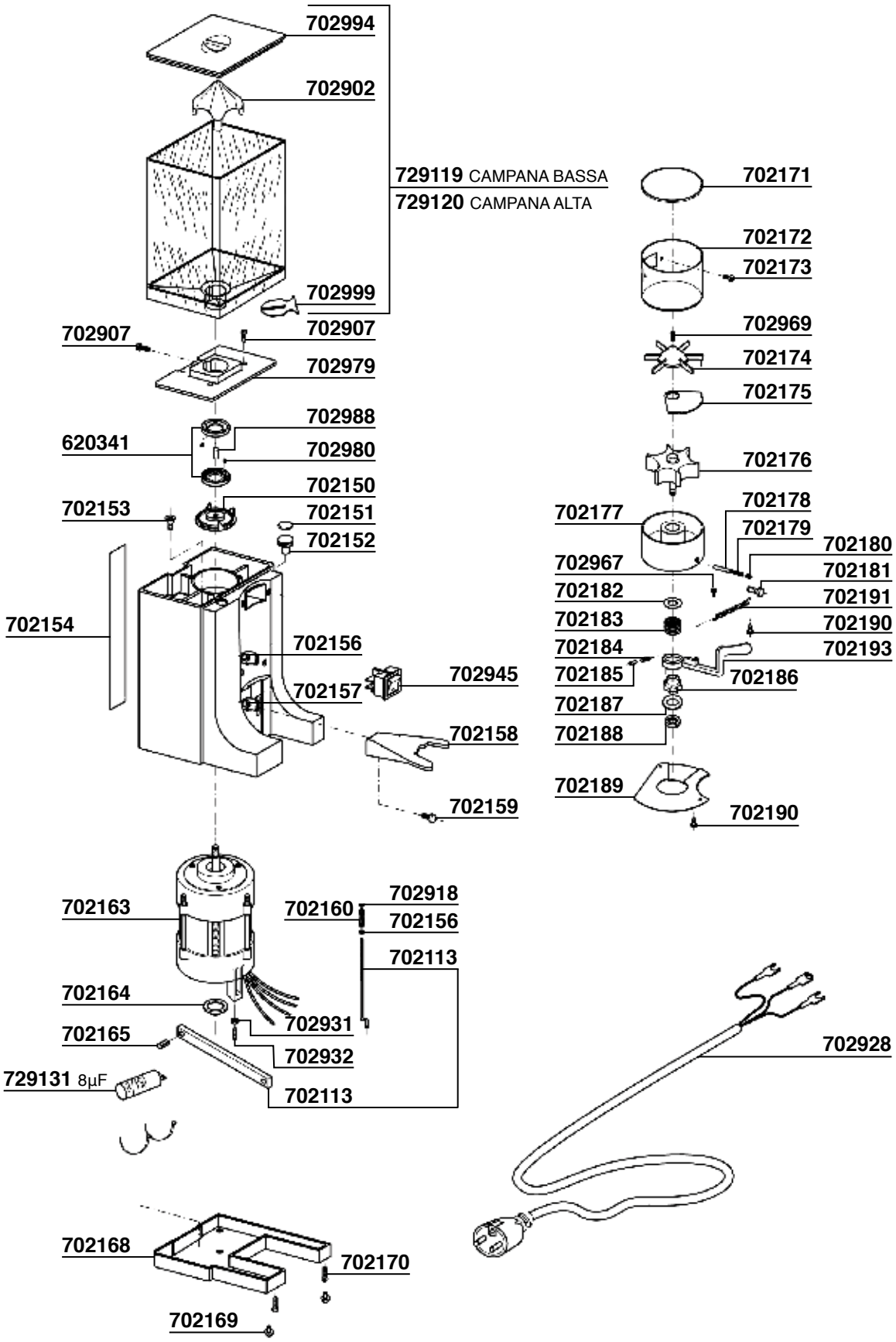

MACINACAFFE'

EUREKA MODEL: MYTHOS

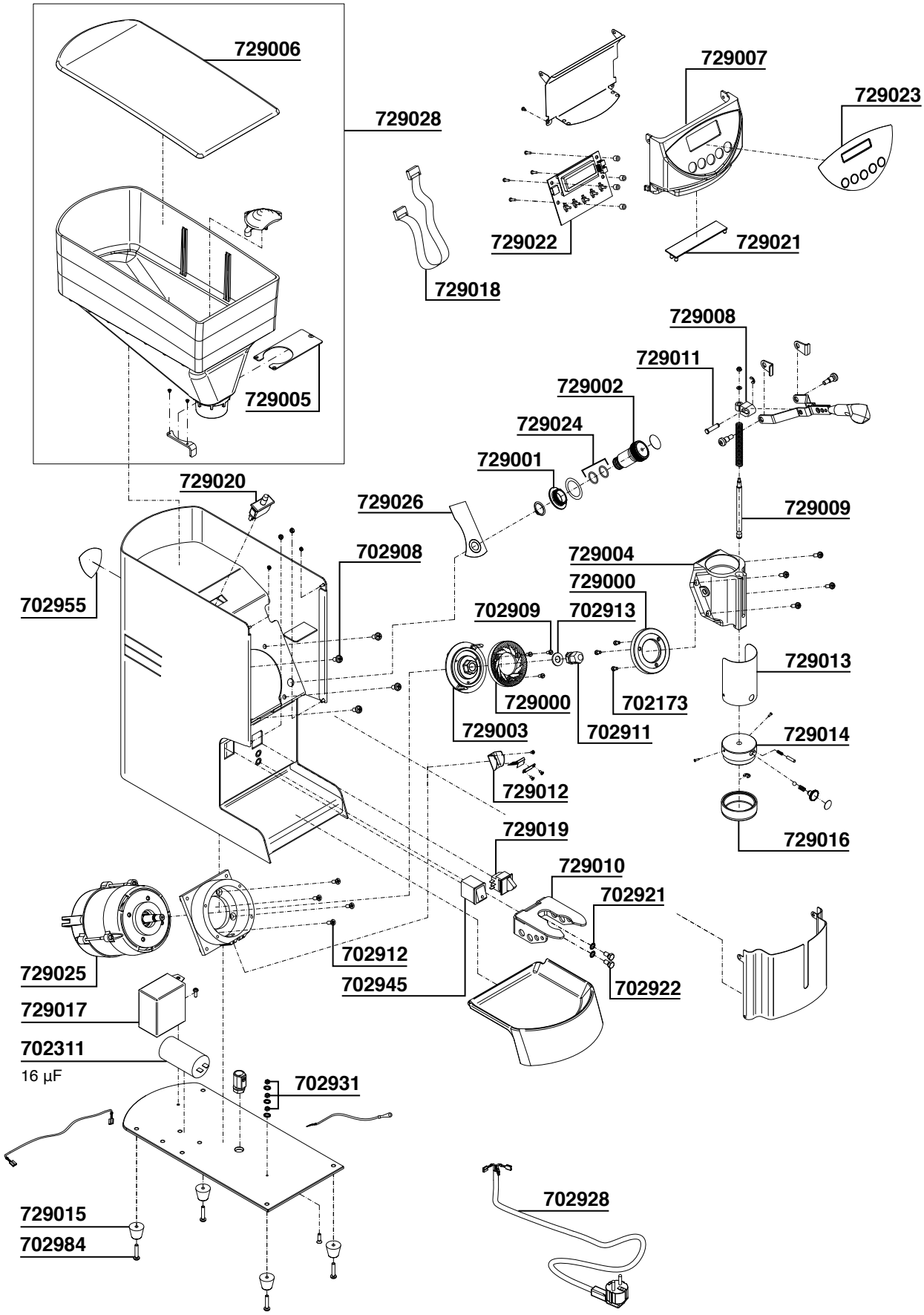

MACINACAFFE'

EUREKA MODEL: OLYMPUS

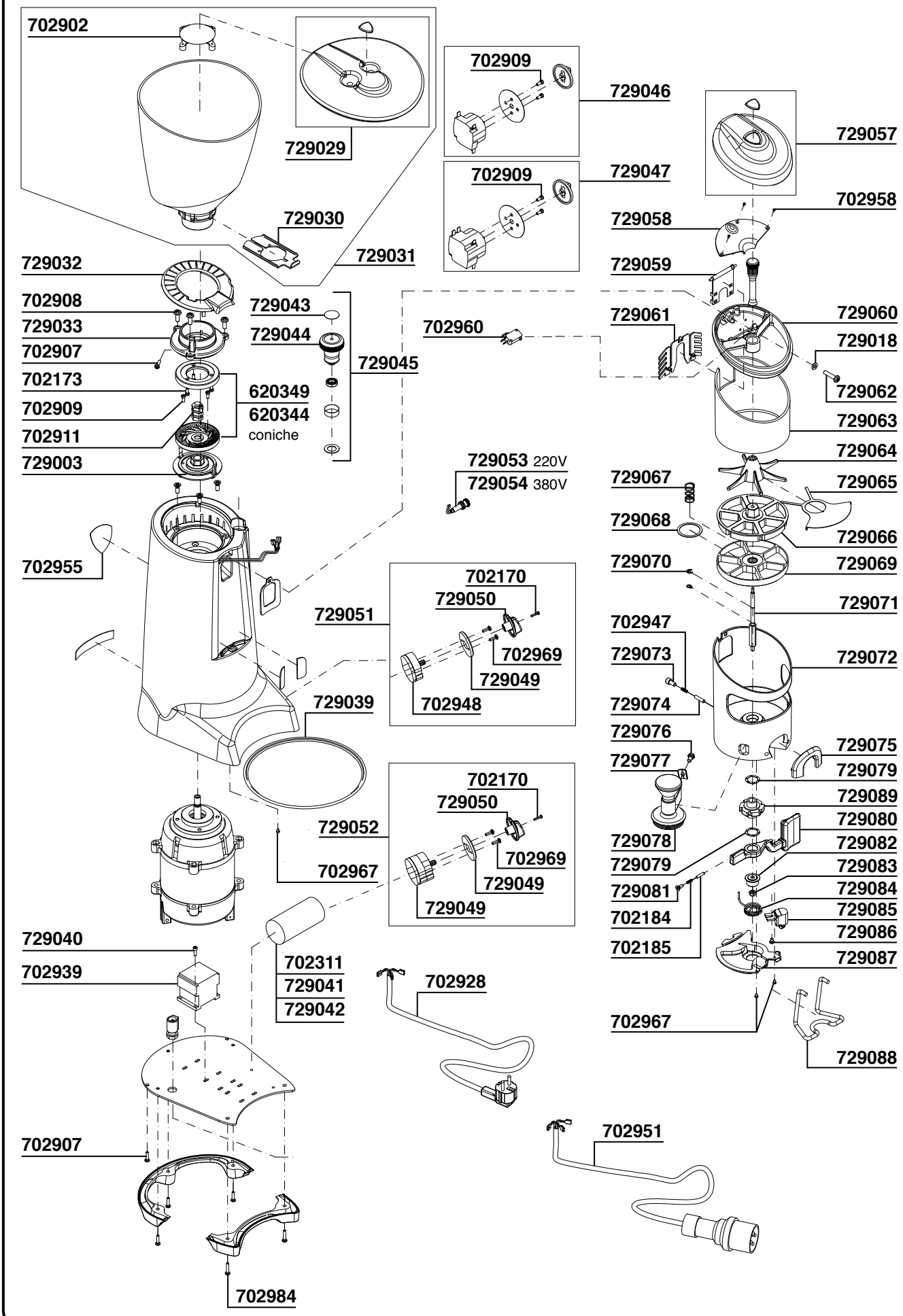

MACINACAFFE'

EUREKA MODEL: FASHION

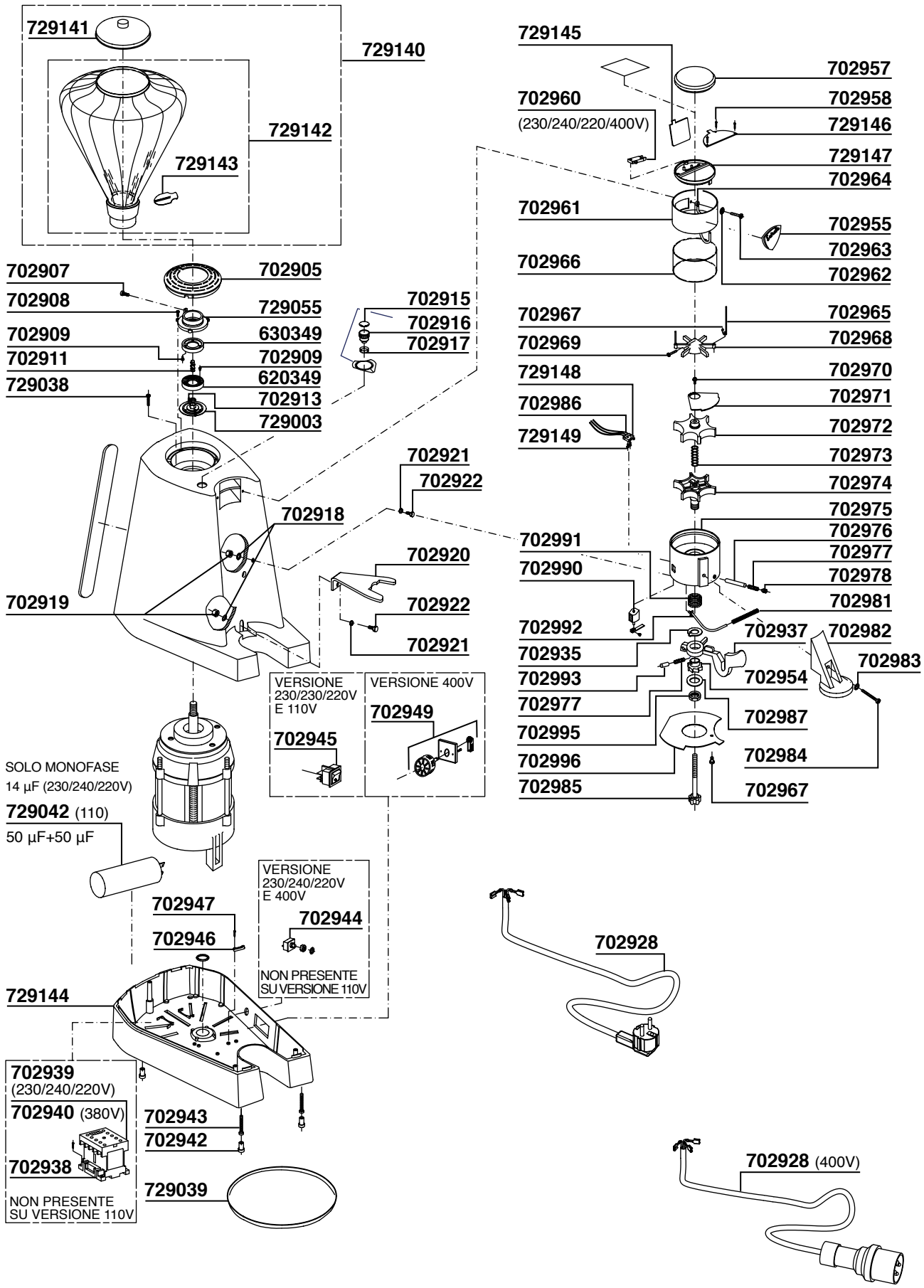

MACINACAFFE'

EUREKA MODEL: MIGNON ISTANTANEO

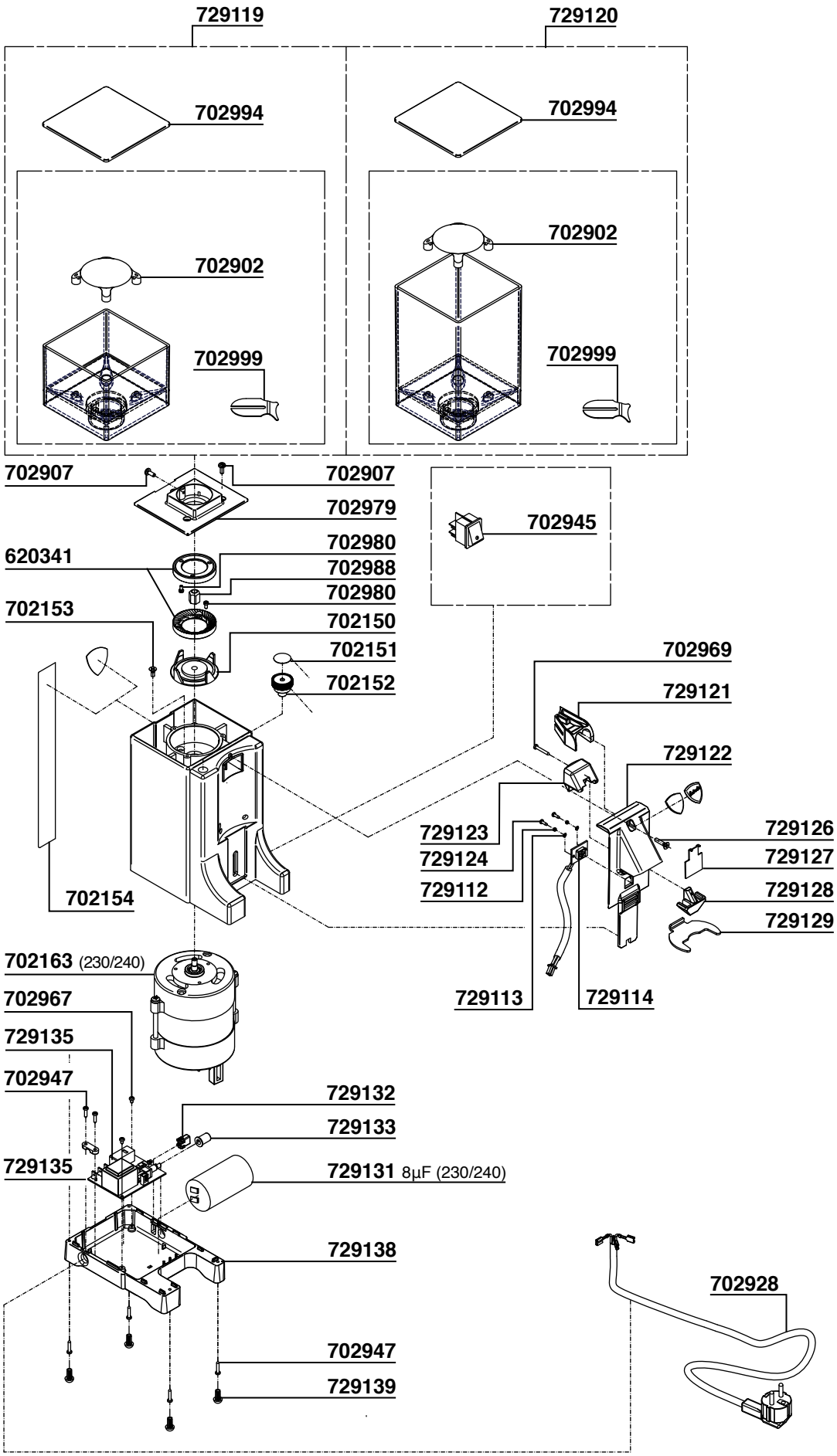

MACINACAFFE'

EUREKA MODEL: ZENITH

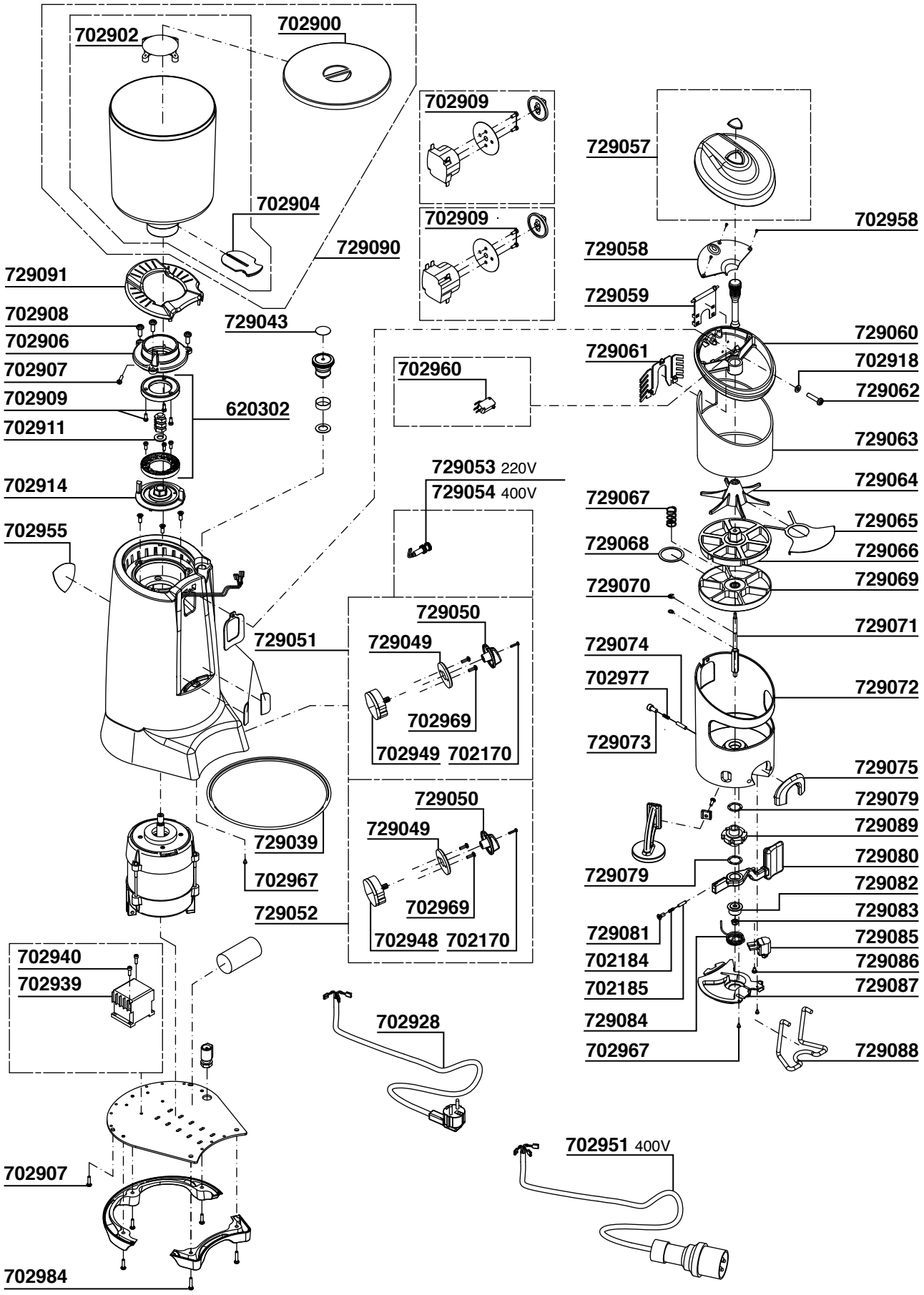

MACINACAFFE'

EUREKA MODEL: ZENITH ELETTRONICO

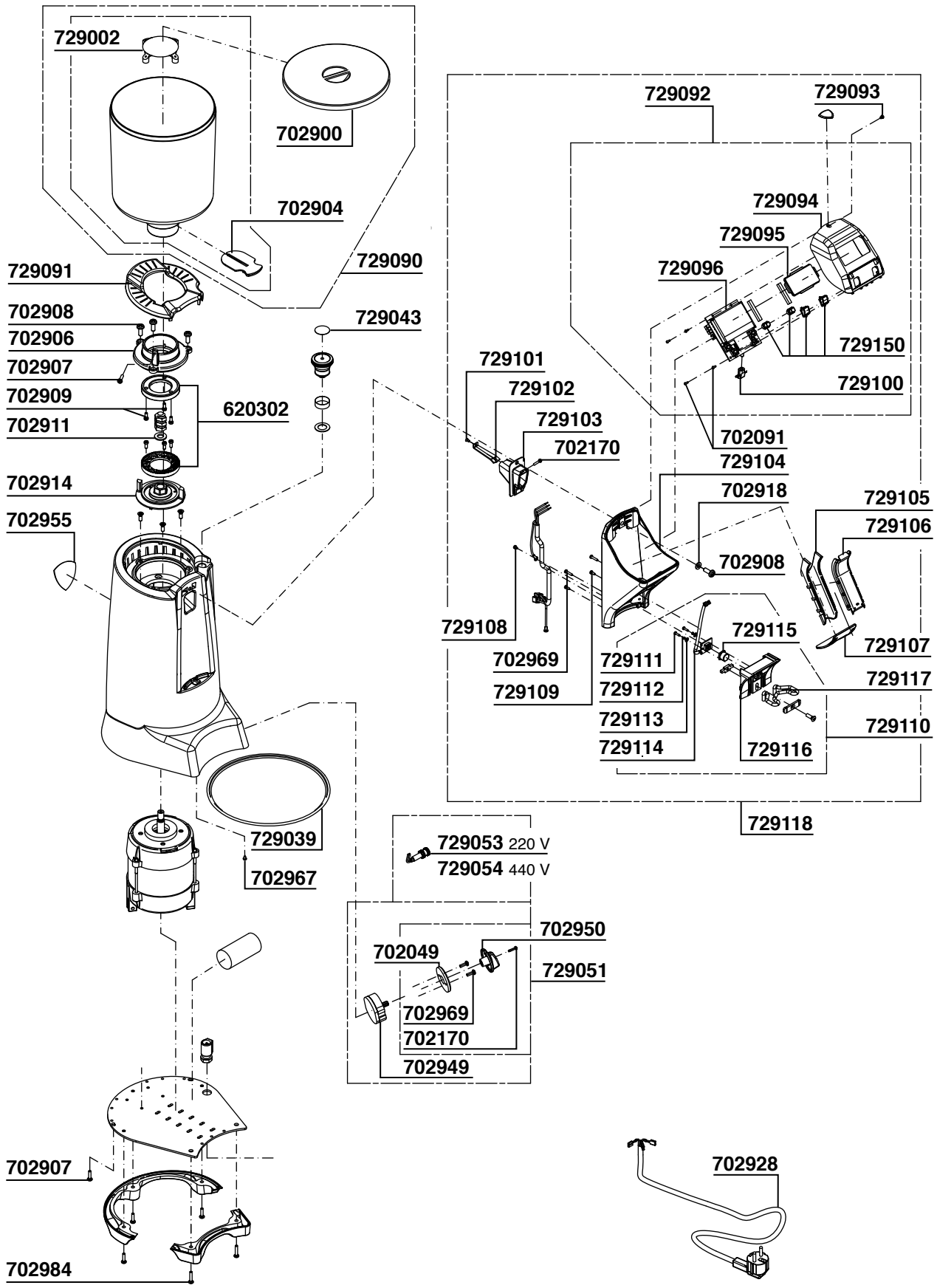

MACINACAFFE'

PARTI COMPATIBILI FAEMA

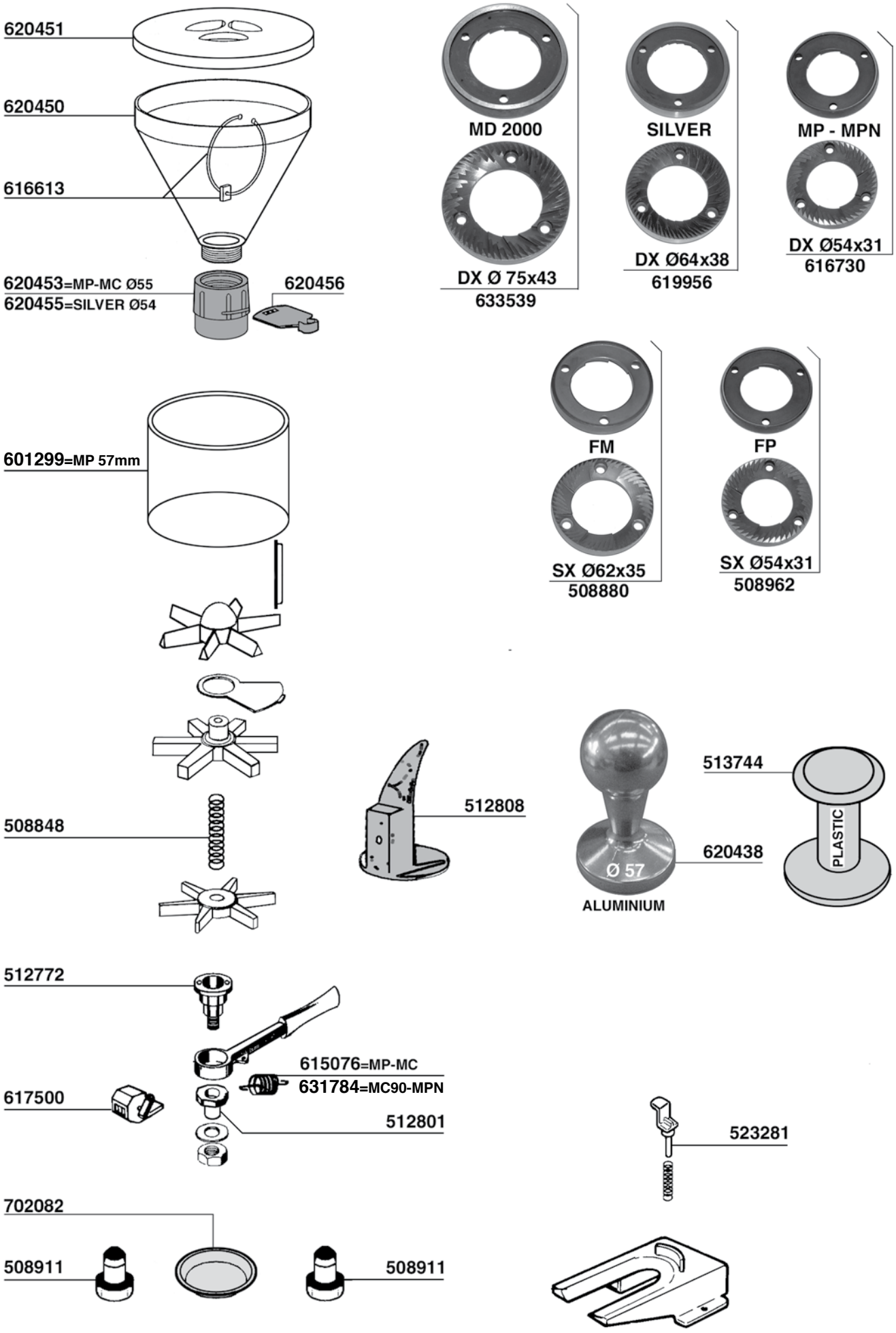

MACINACAFFE'

PARTI COMPATIBILI FAEMA

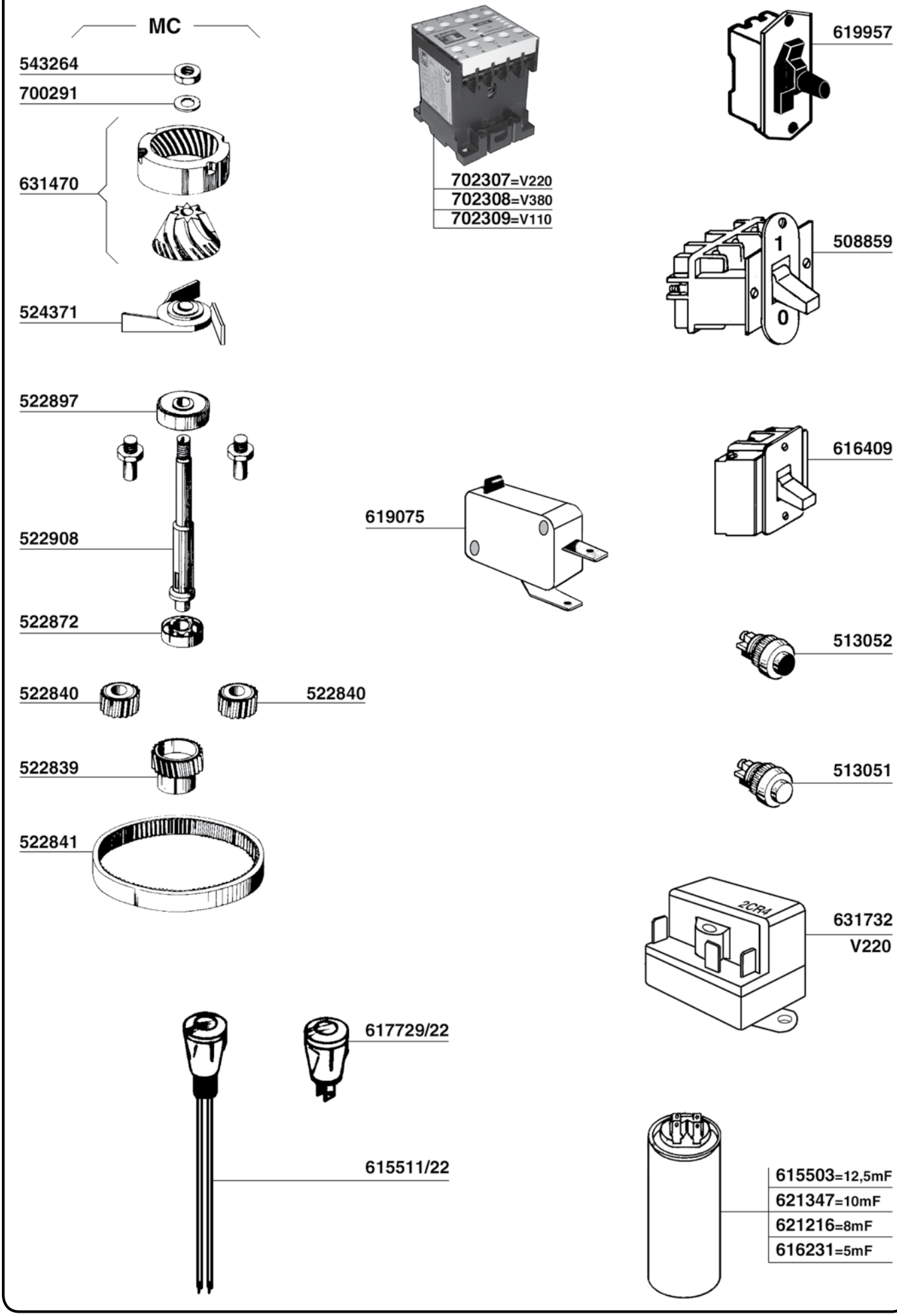

NUOVA RICAMBI

MACINACAFFE'

Tav. 21

FIORENZATO MC MODEL: F5 - F6

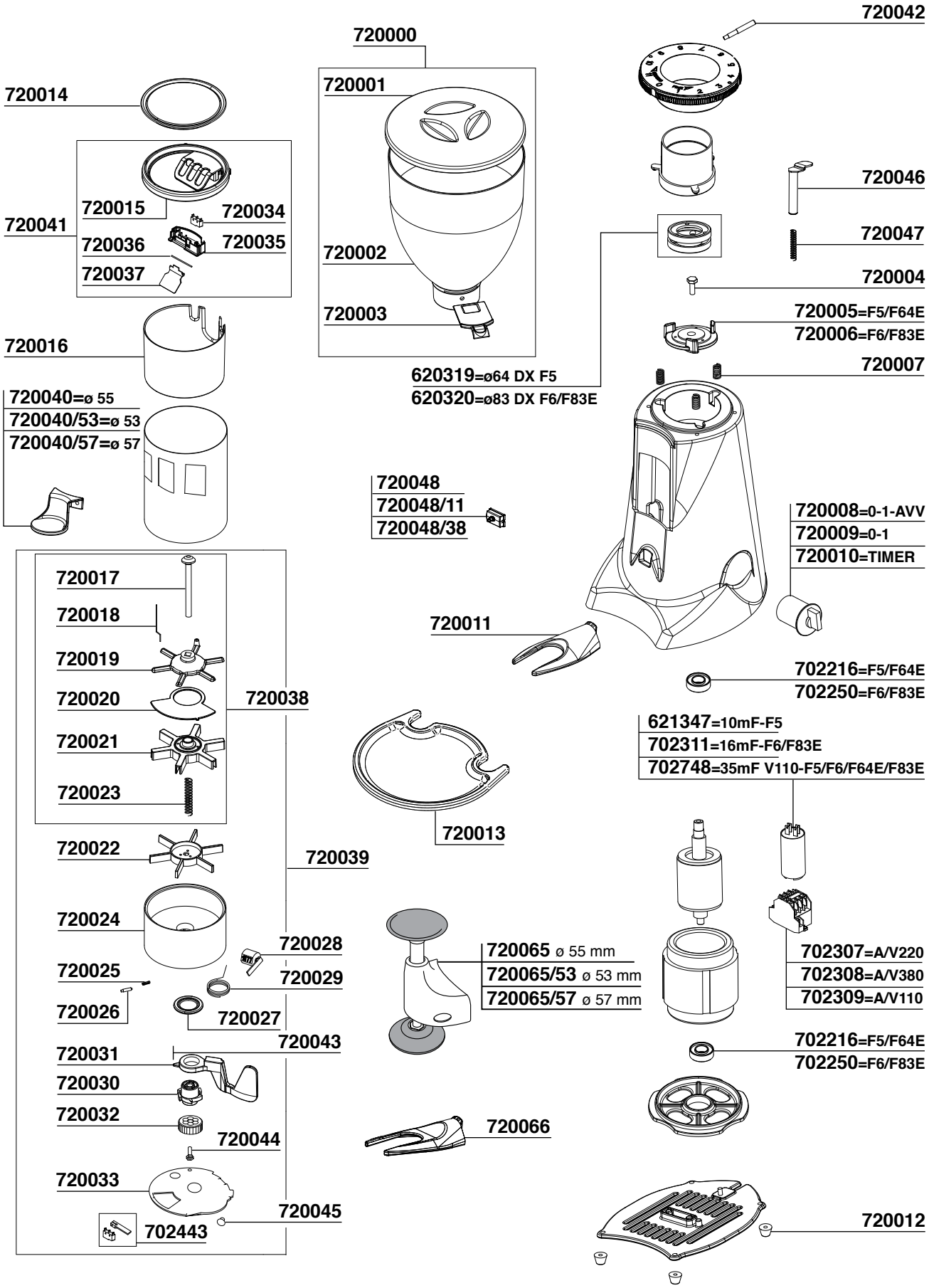

MACINACAFFE'

FIORENZATO MC MODEL: F64E - F64EVO - F83E

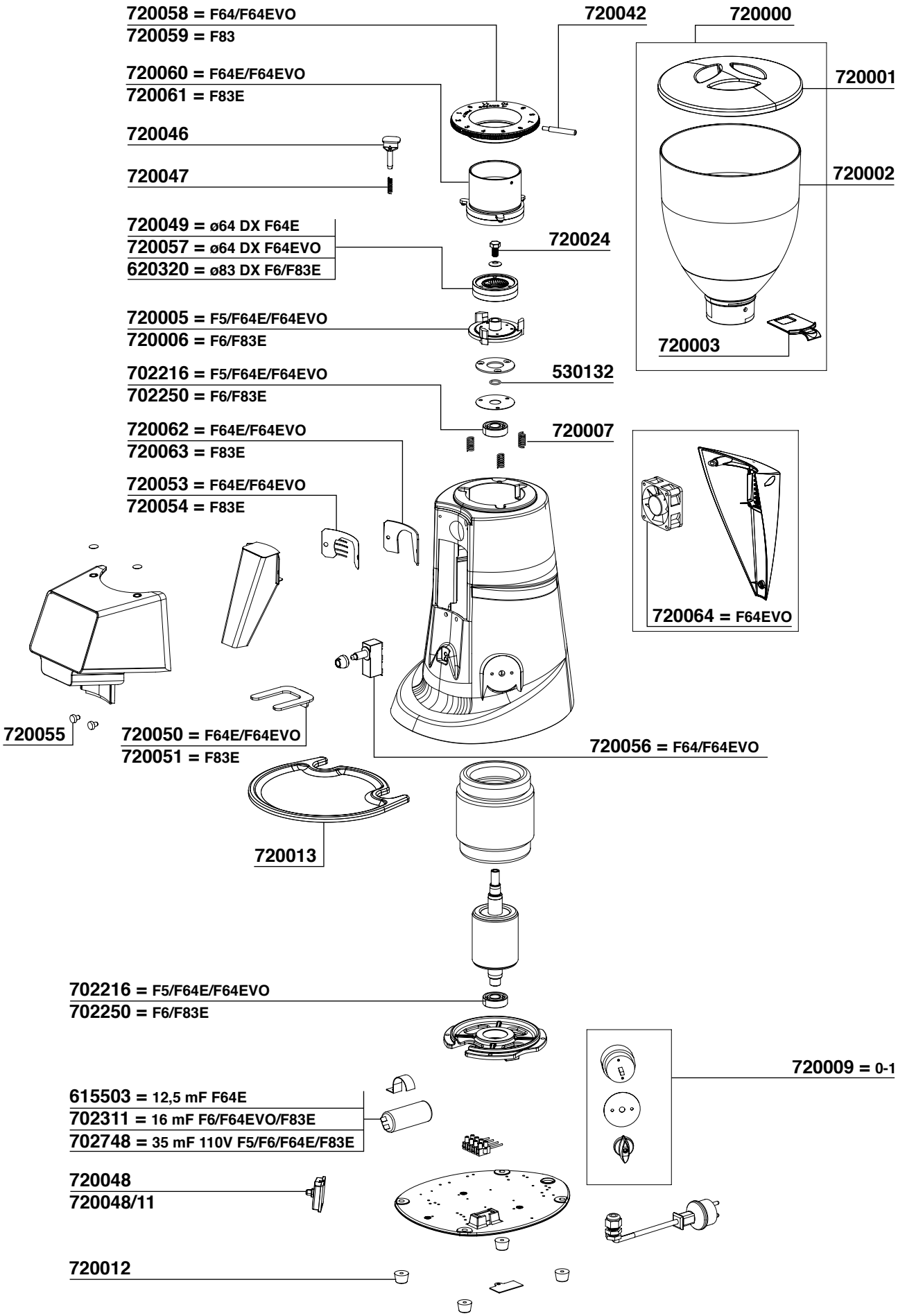

H5

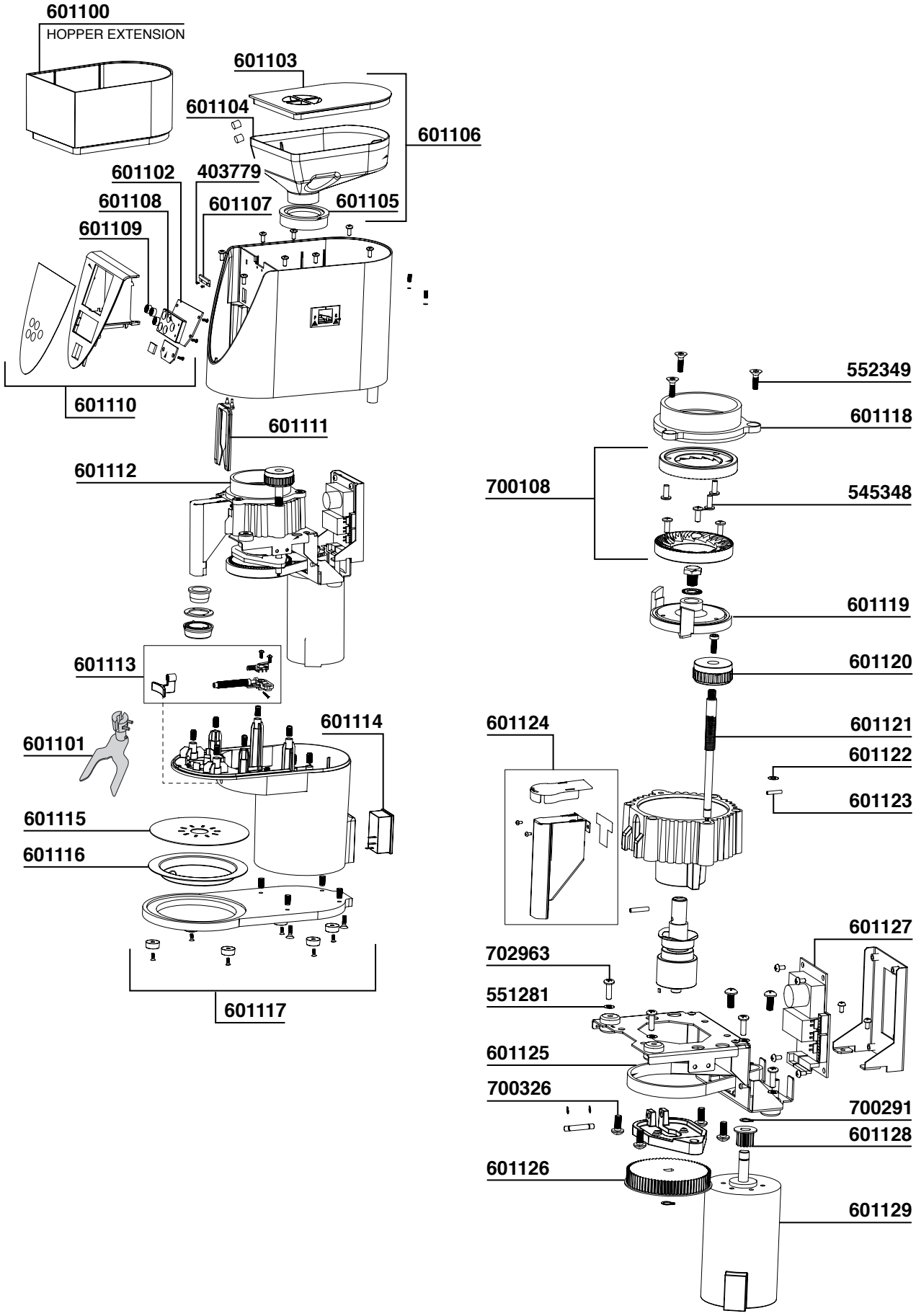
601100
HOPPER EXTENSION
601103
601104
601106
601102
403779
601108
601107
601105
601109
601110
601111
601112
601113
601114
601101
601115
601116
601117
552349
601118
700108
545348
601119
601120
601124
601121
601122
601123
601127
702963
551281
601125
700326
700291
601128
601126
601129

MACINACAFFE'

HC 600

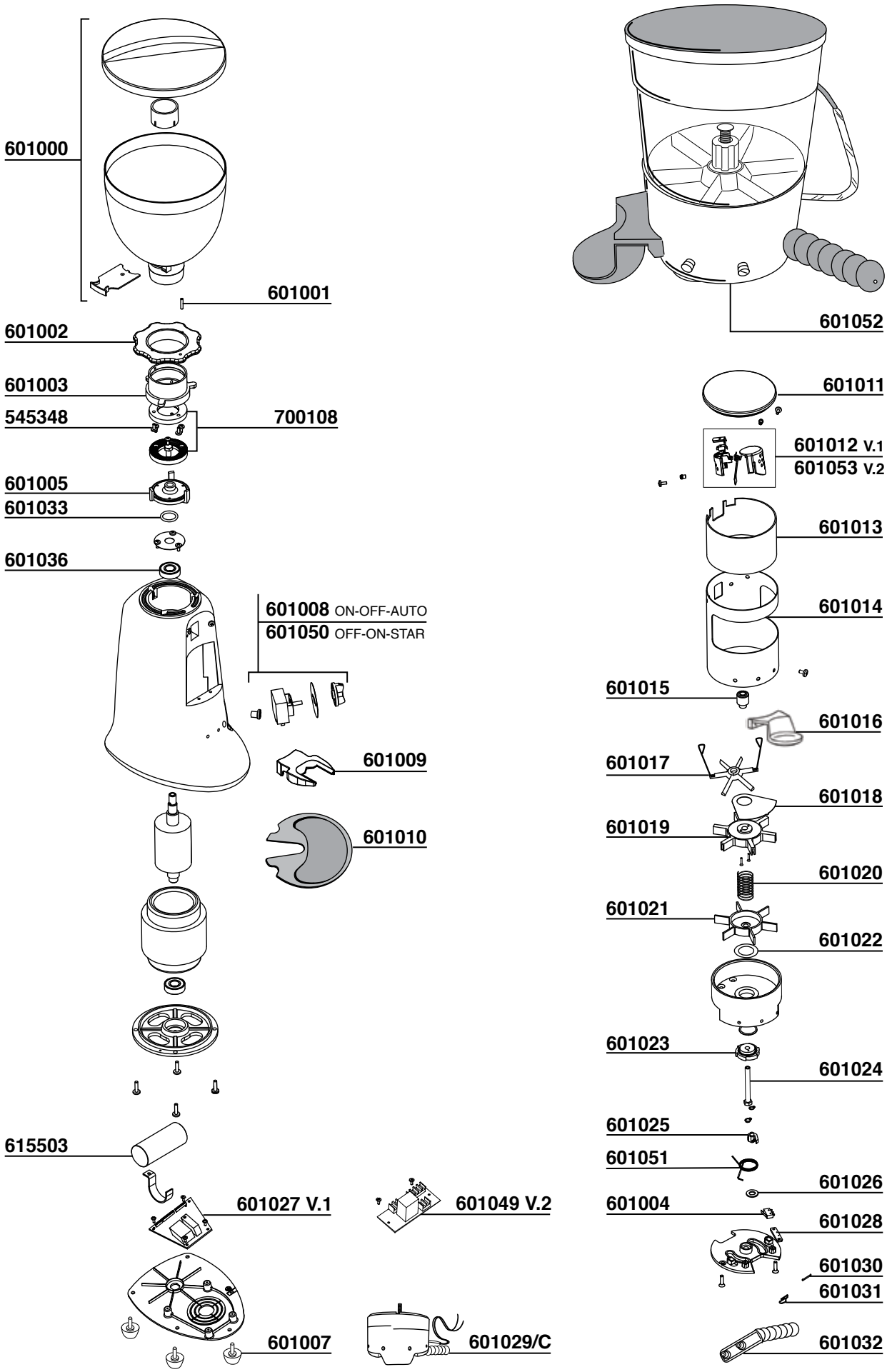

MACINACAFFE'

HC 700

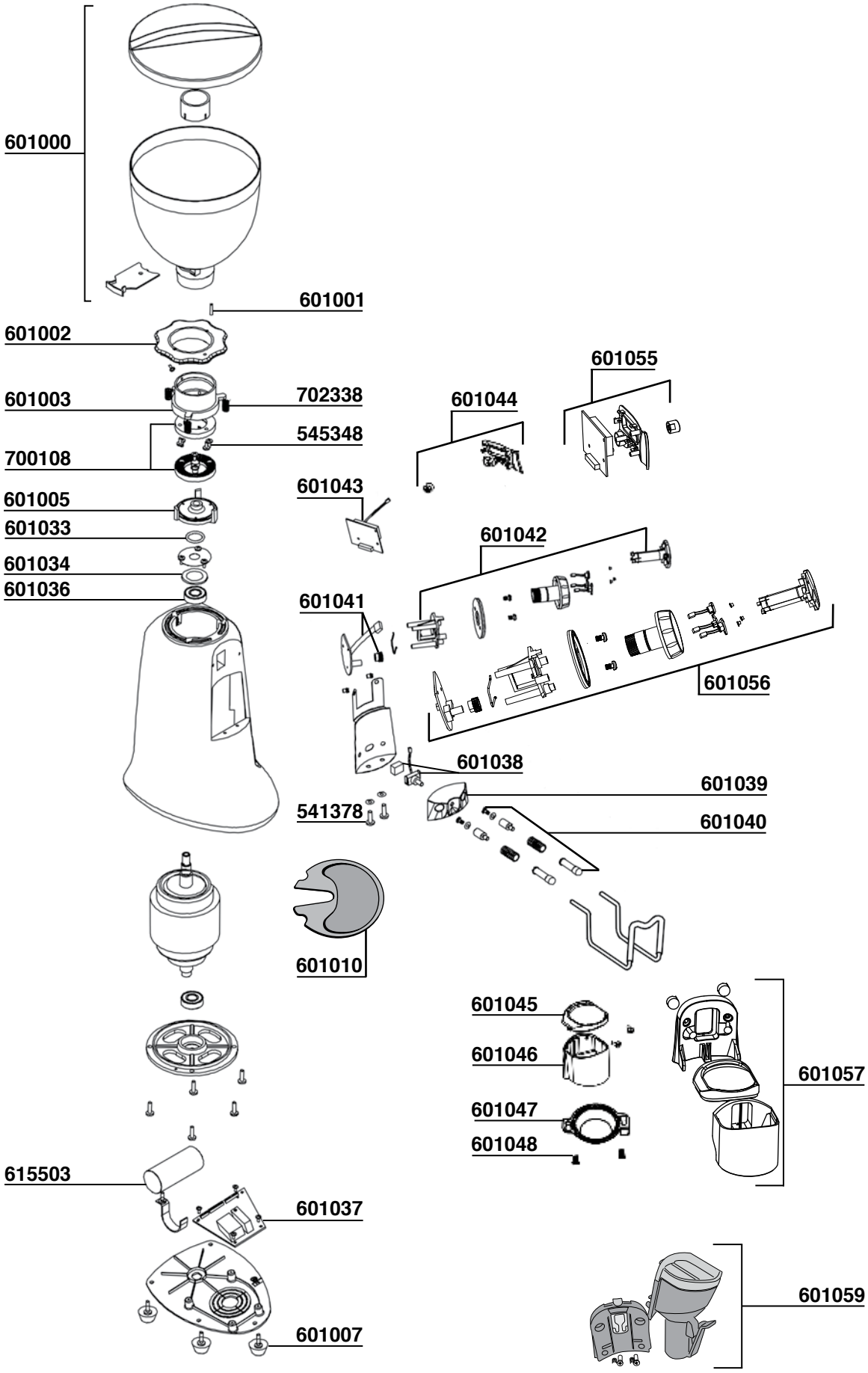

MACINACAFFE'

MACAP MODEL MX - MXT - MXA - MXK

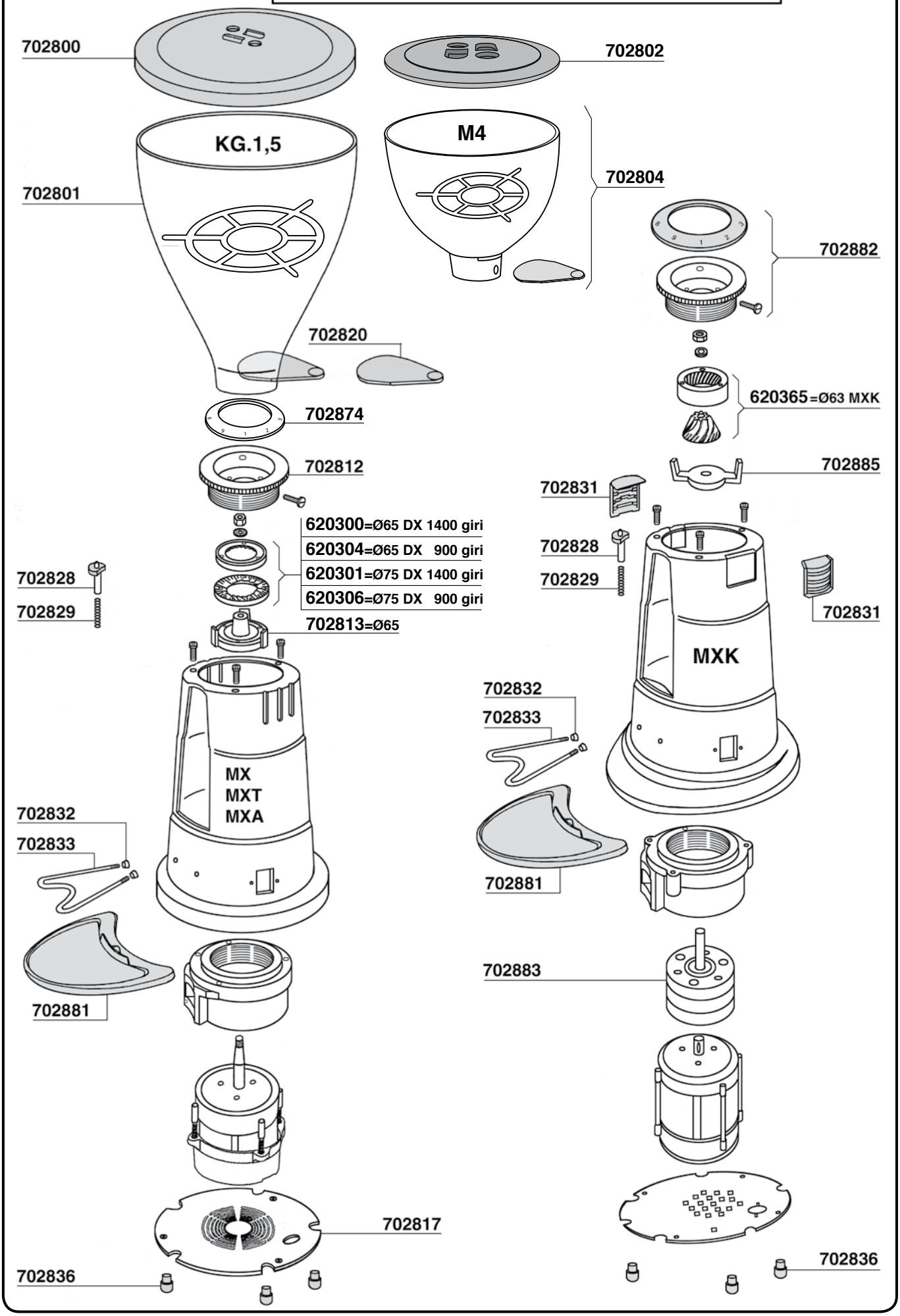

MACINACAFFE'

MACAP MODEL MX - MXT - MXA - MXK

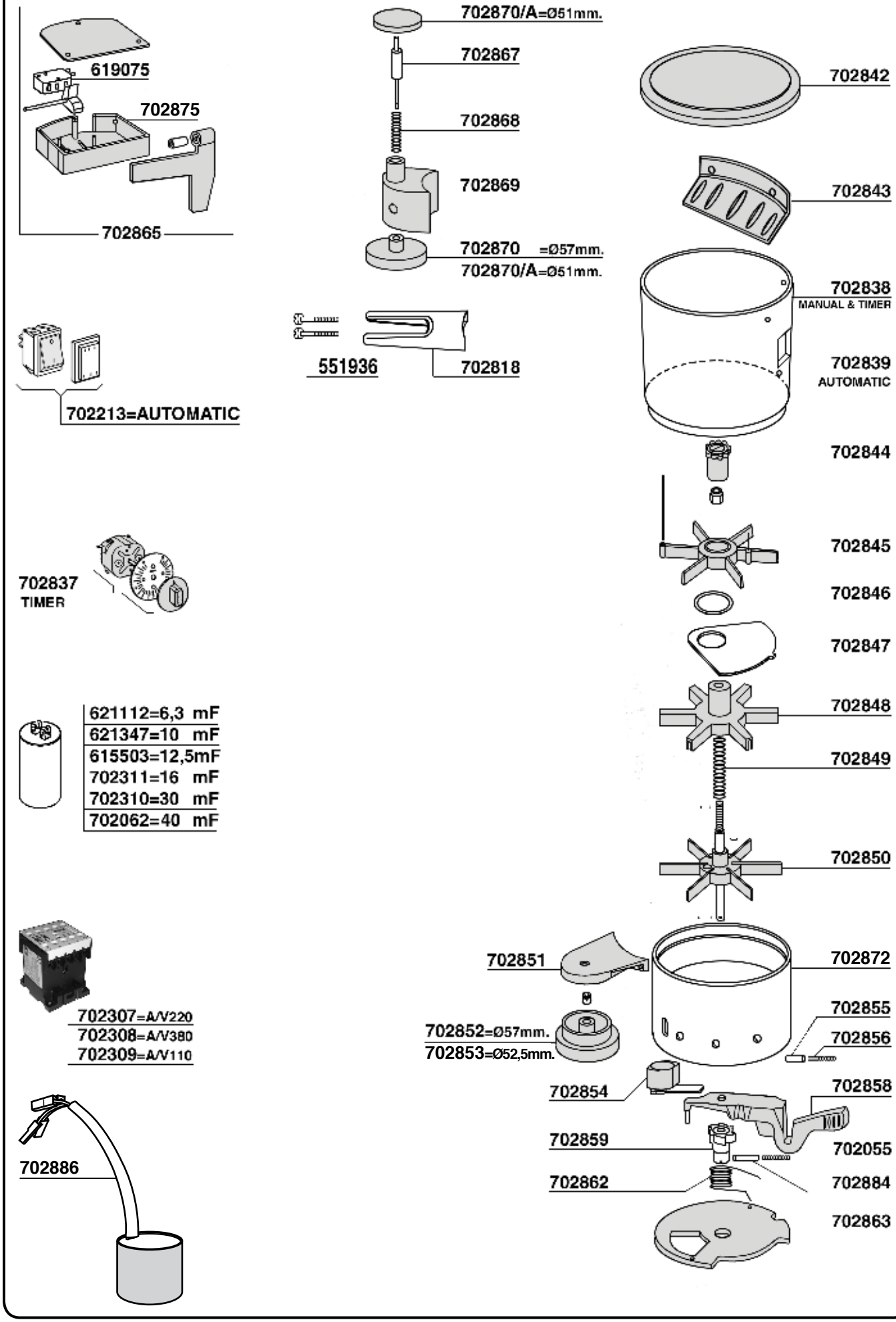

MACINACAFFE'

MACAP MODEL M2D

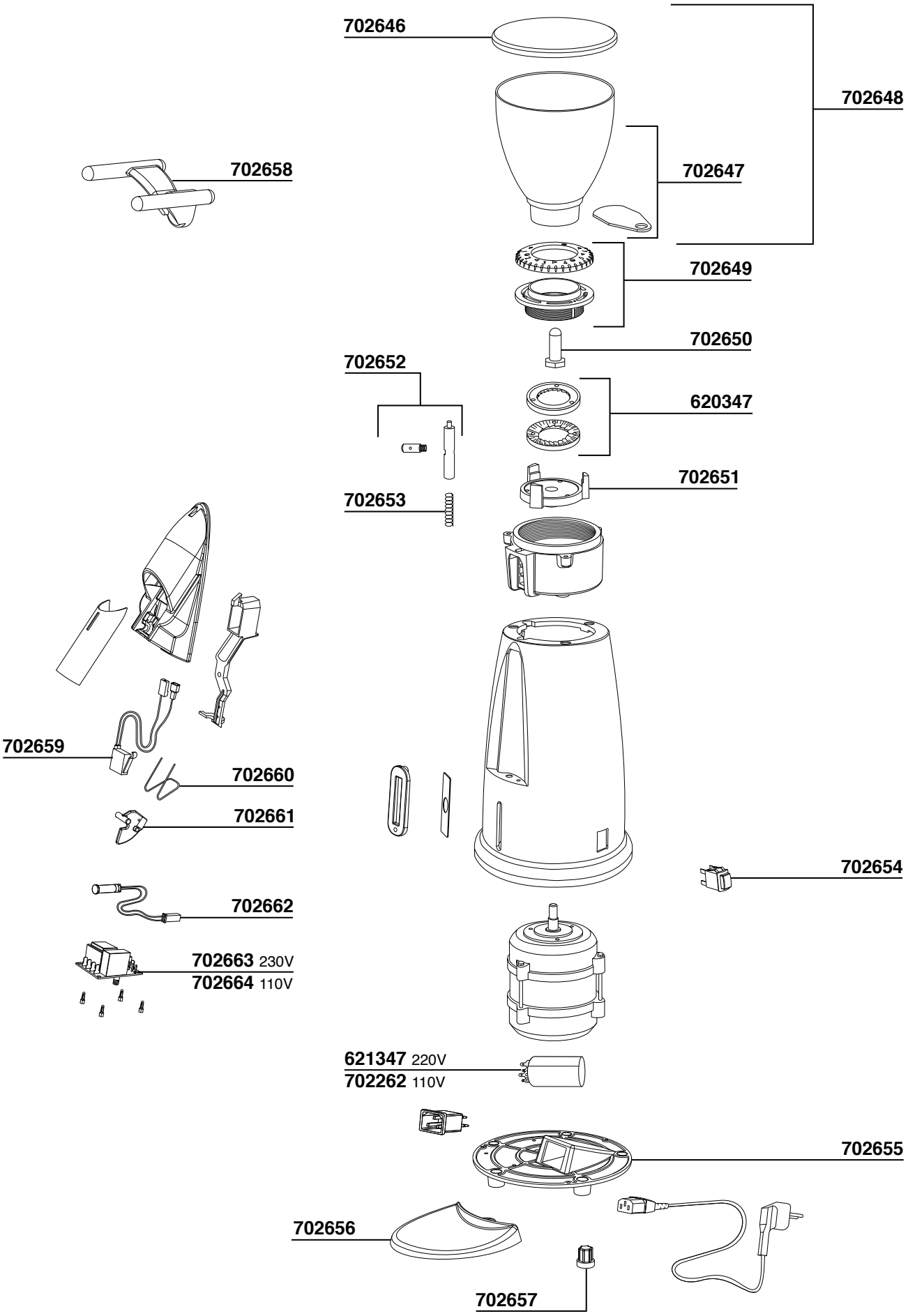

MACINACAFFE'

MACAP MODEL M5D-M5D PLUS

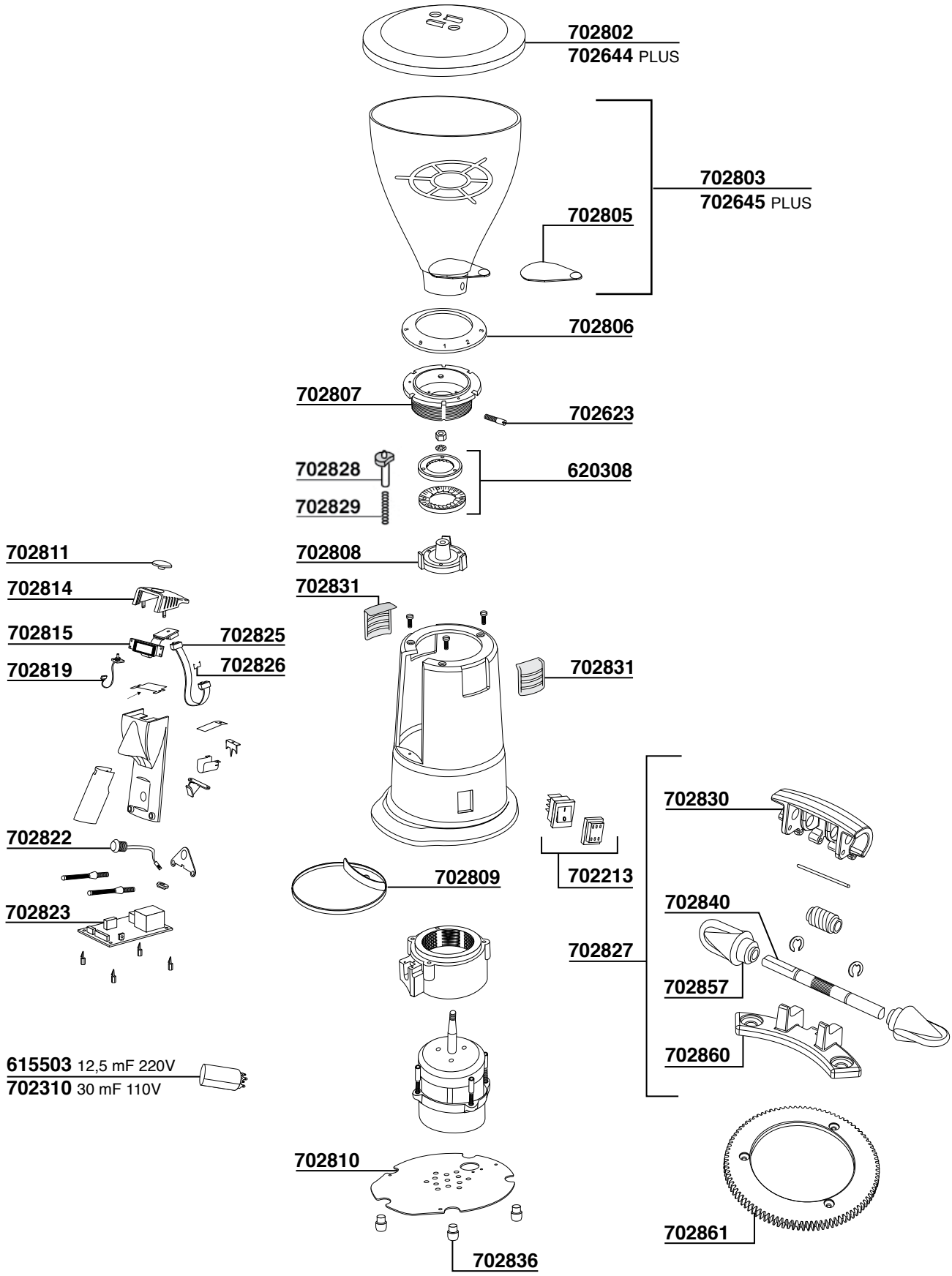

MACINACAFFE'

MACAP MODEL M7D

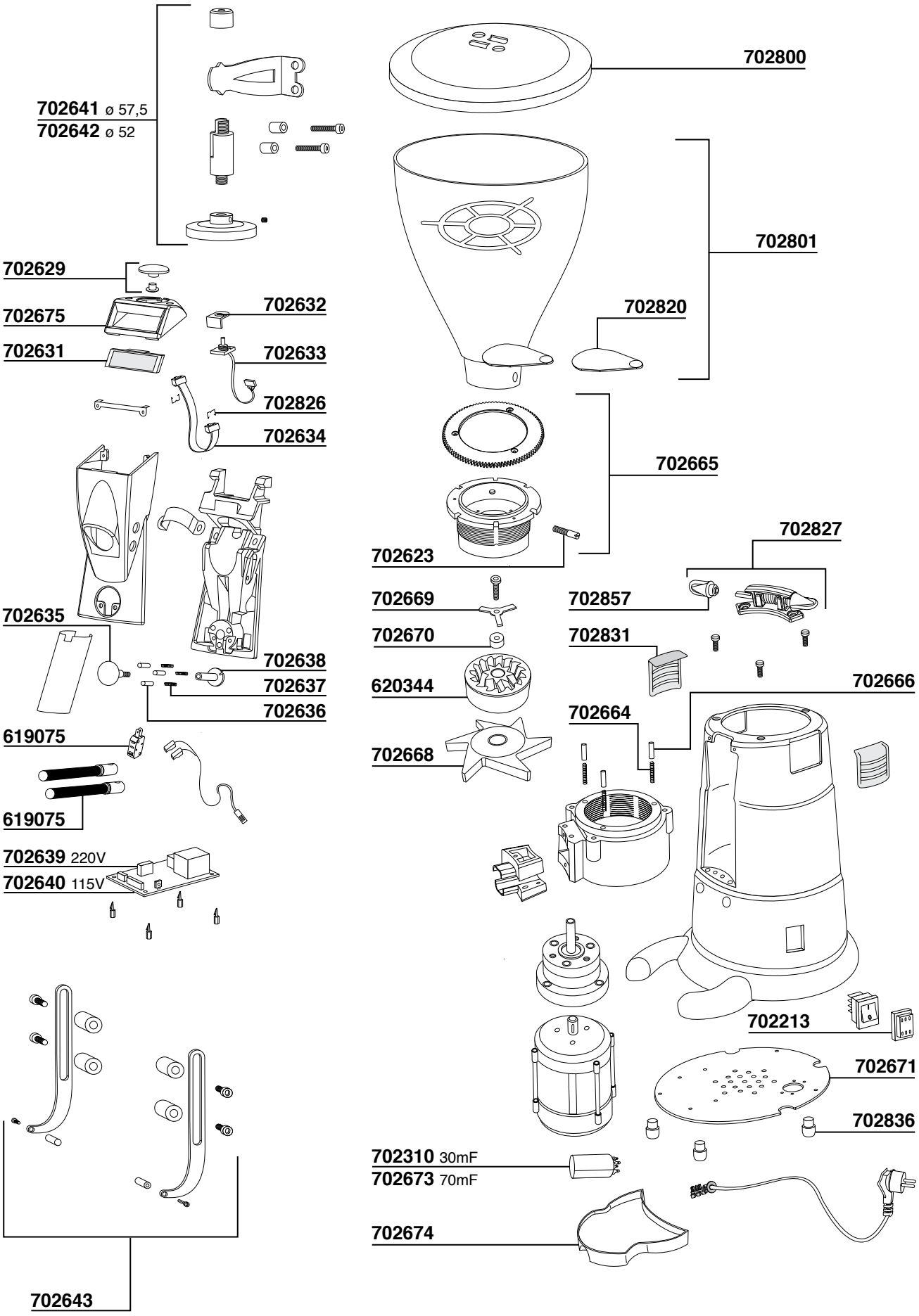

MACINACAFFE'

MACAP MODEL MXD Xtreme

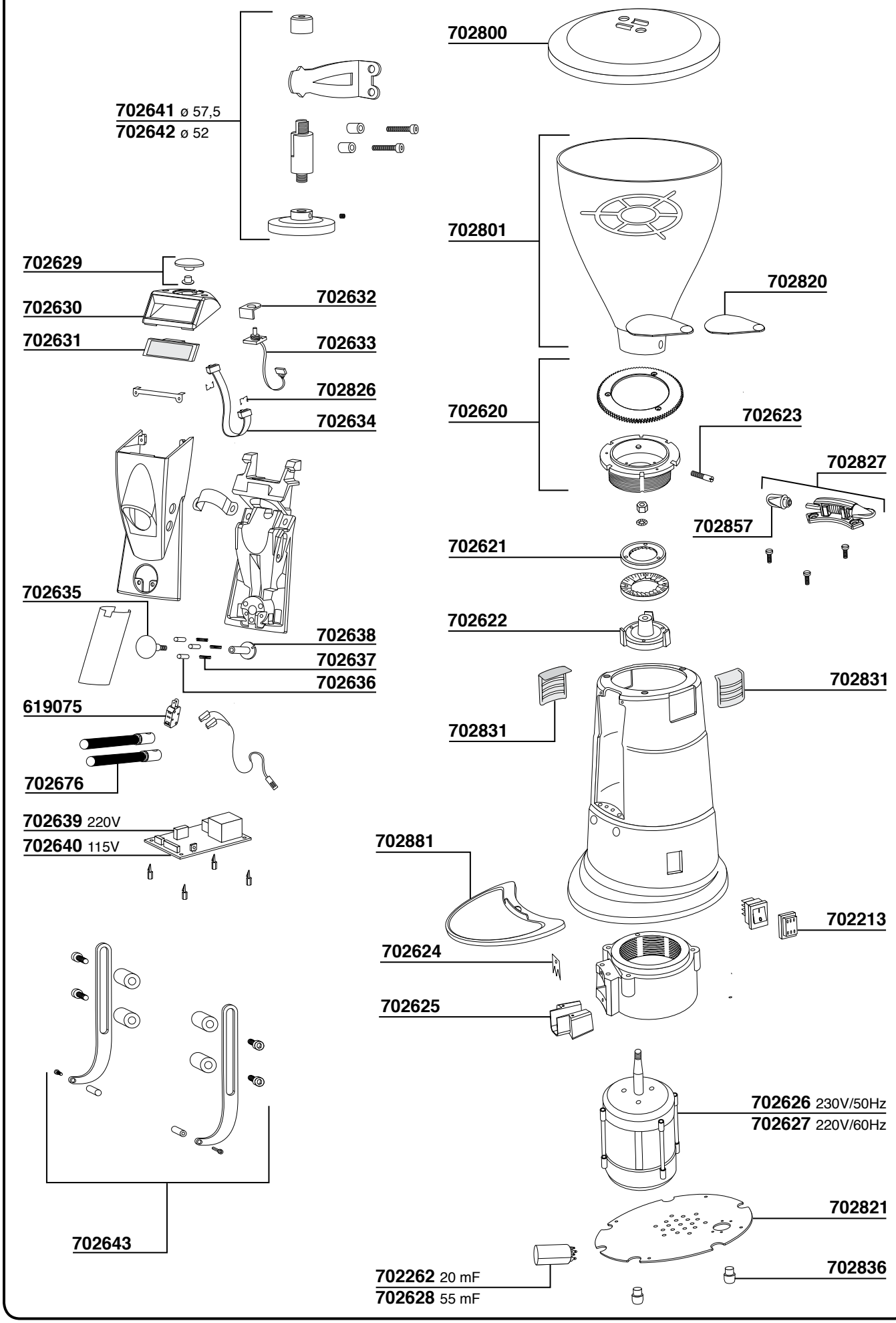

MACINACAFFE'

MACAP MODEL CPS

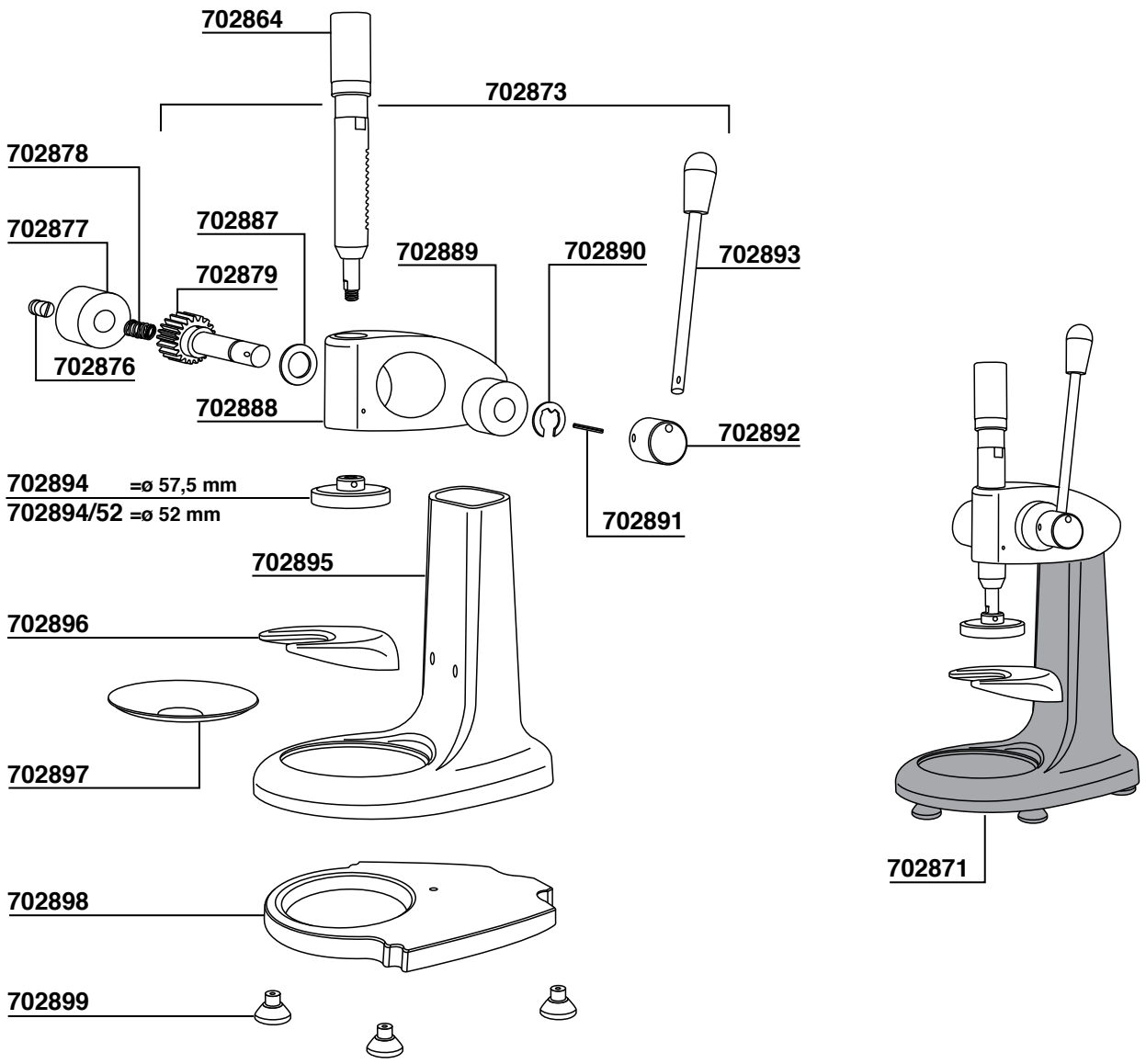

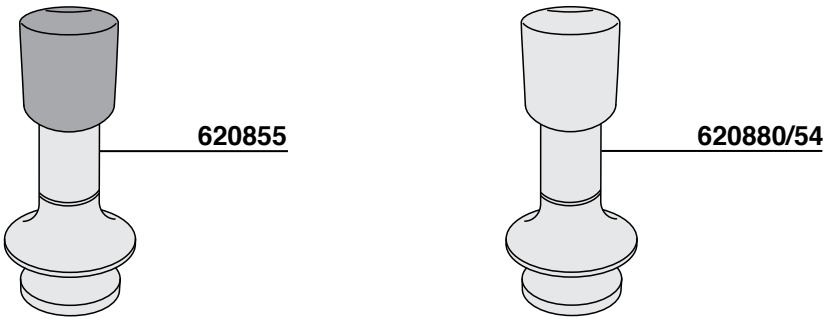

MAZZER MODEL: JOLLY - MAJOR

JLY =MODEL JOLLY MJR =MODEL MAJOR

S= MANUAL A= AUTOMATIC

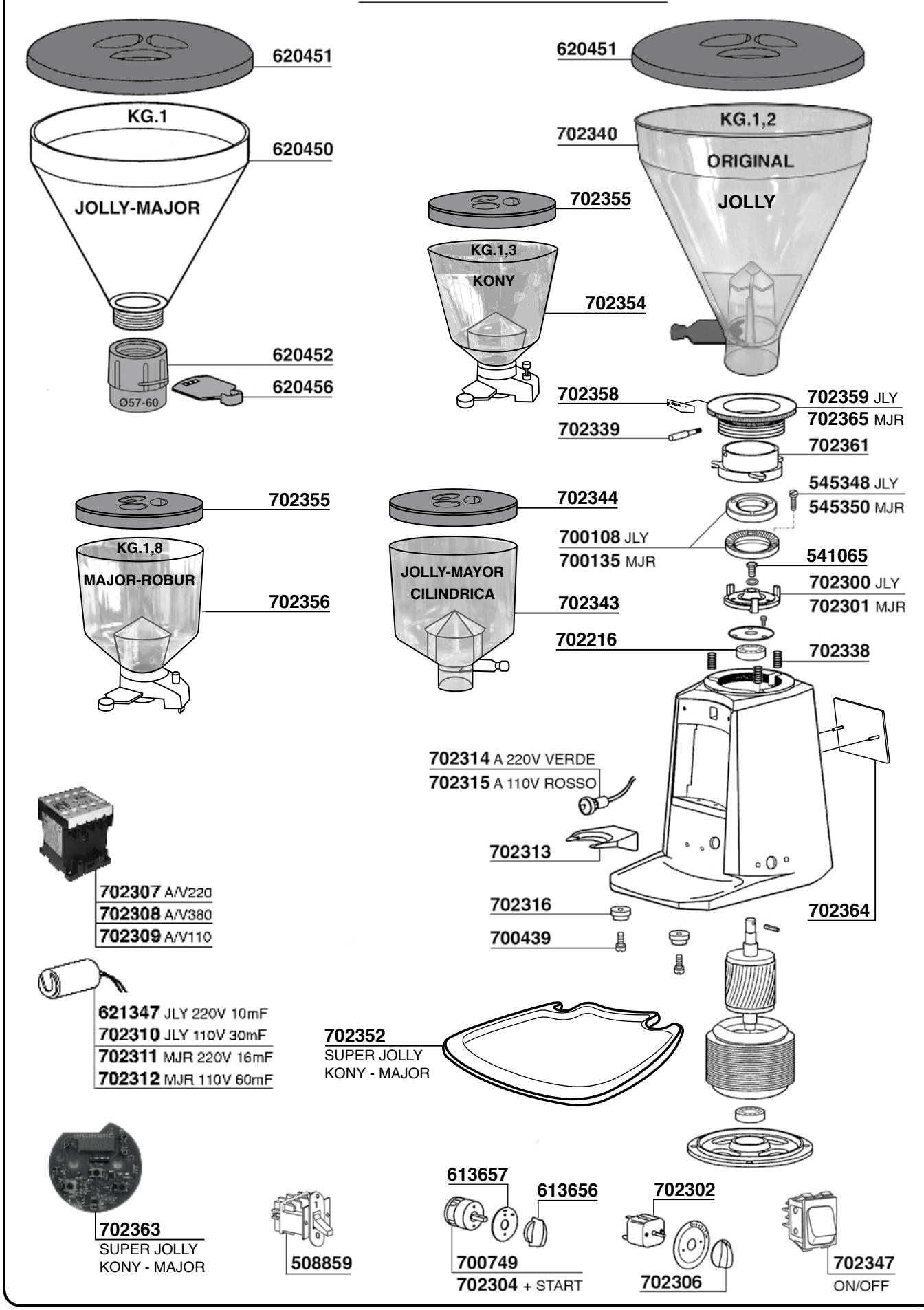

MACINACAFFE'

MAZZER MODEL: MINI

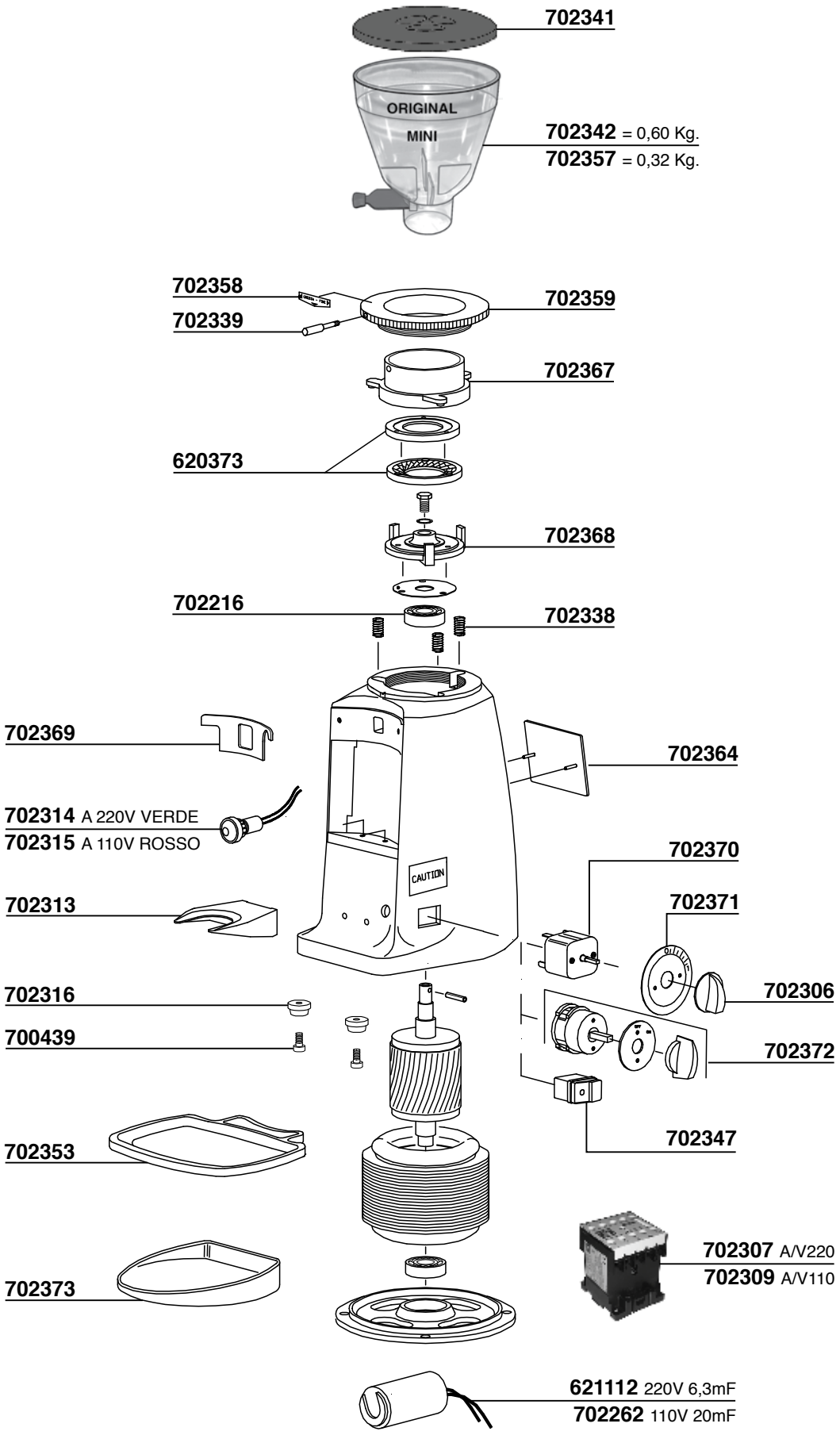

MACINACAFFE'

MAZZER MODEL: JOLLY-MAJOR-MINI

JLY=MODEL JOLLY
S=MANUAL

MJR=MODEL MAJOR
A=AUTOMATIC

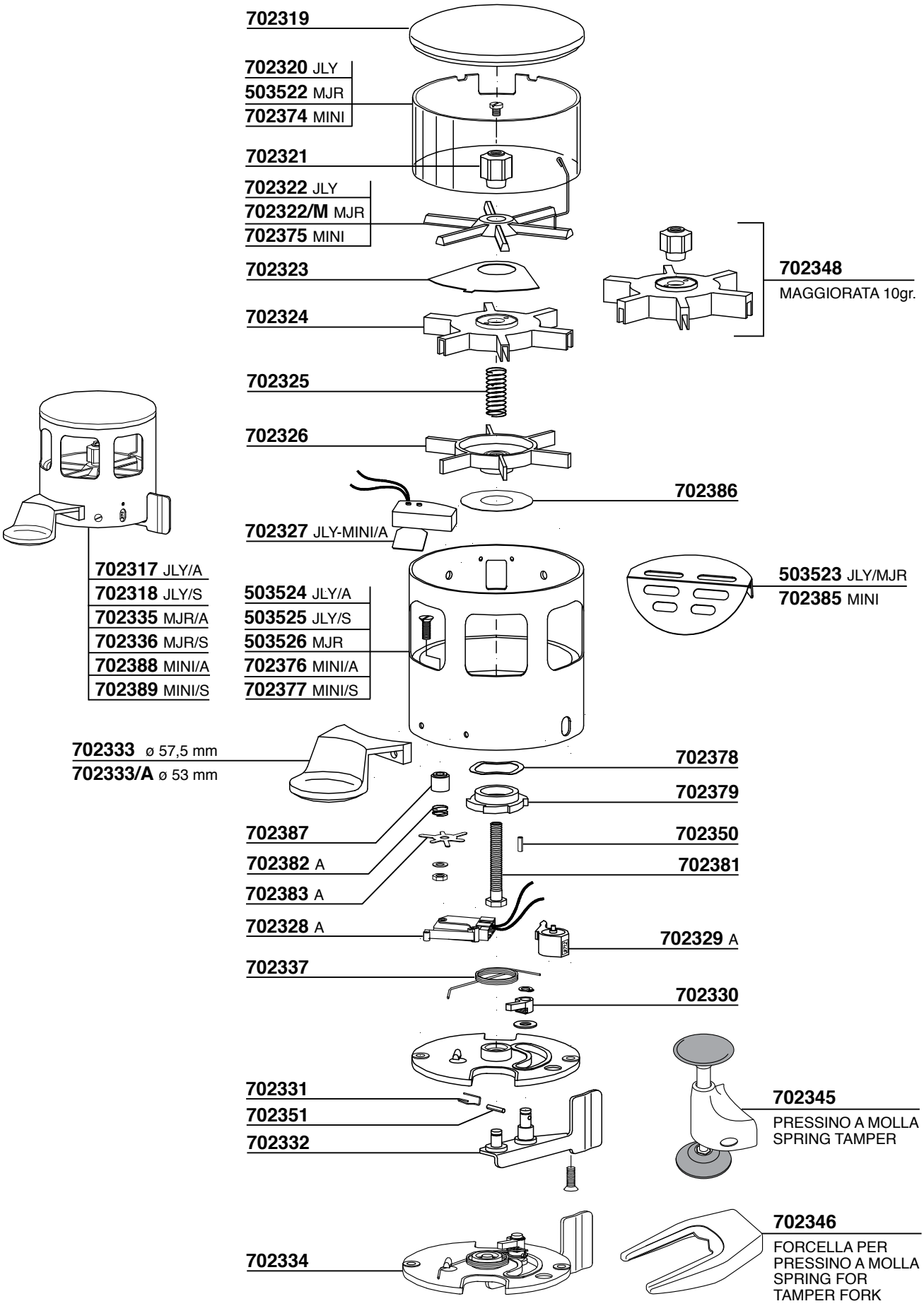

MACINACAFFE'

MAZZER MODEL:MINI ELETRONICO A-B

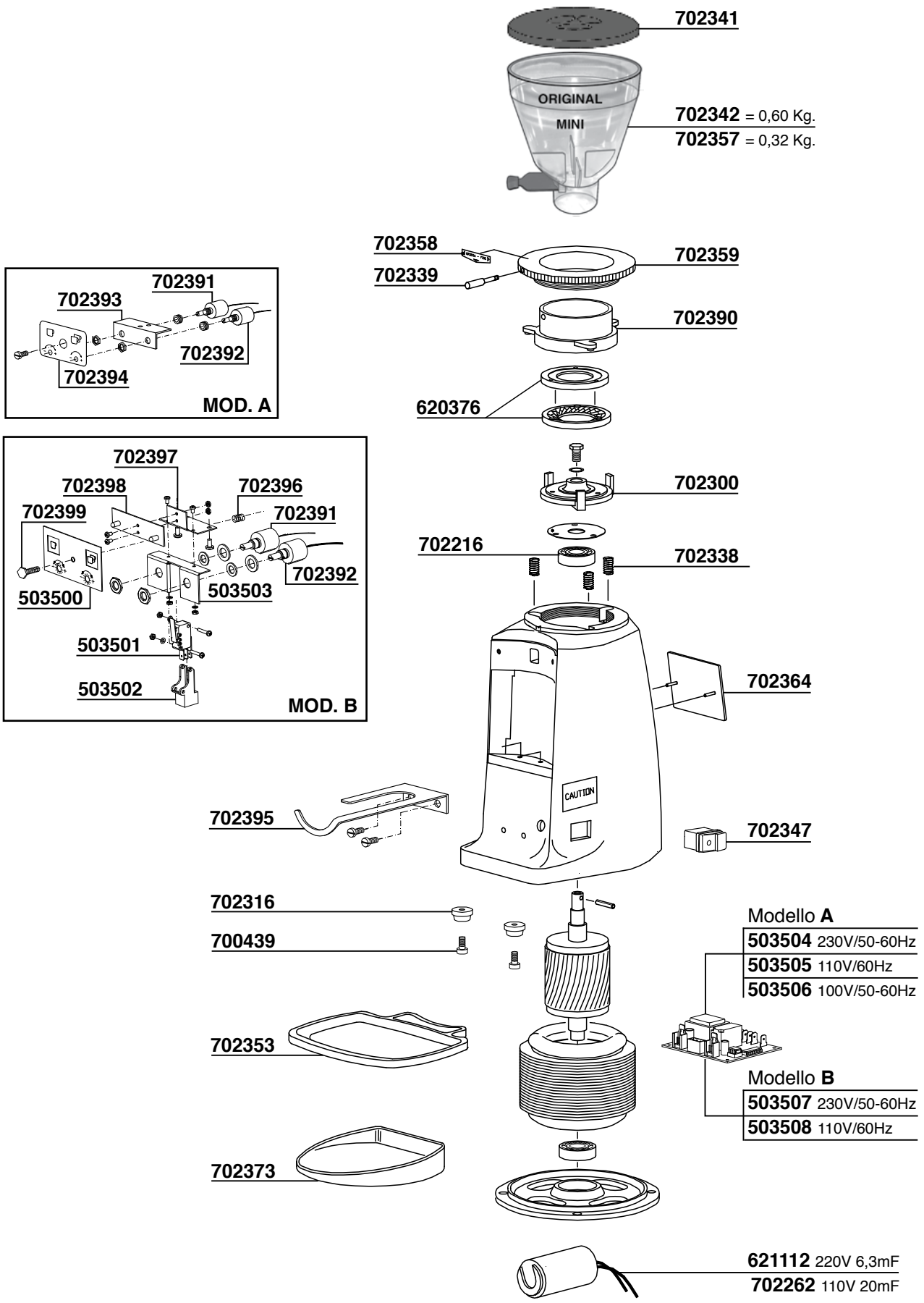

MACINACAFFE'

MAZZER MODEL:MINI ELETRONICO A-B

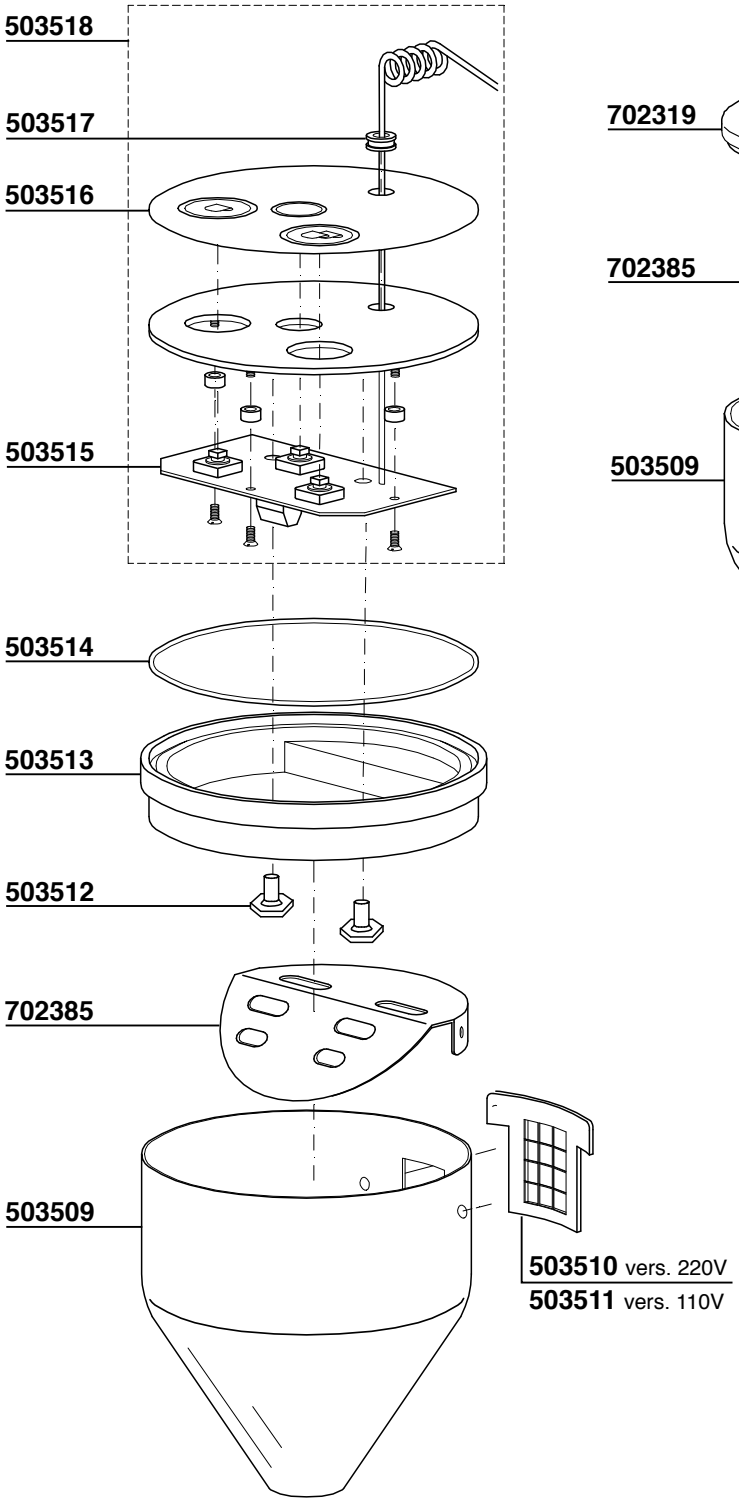

MOD. A

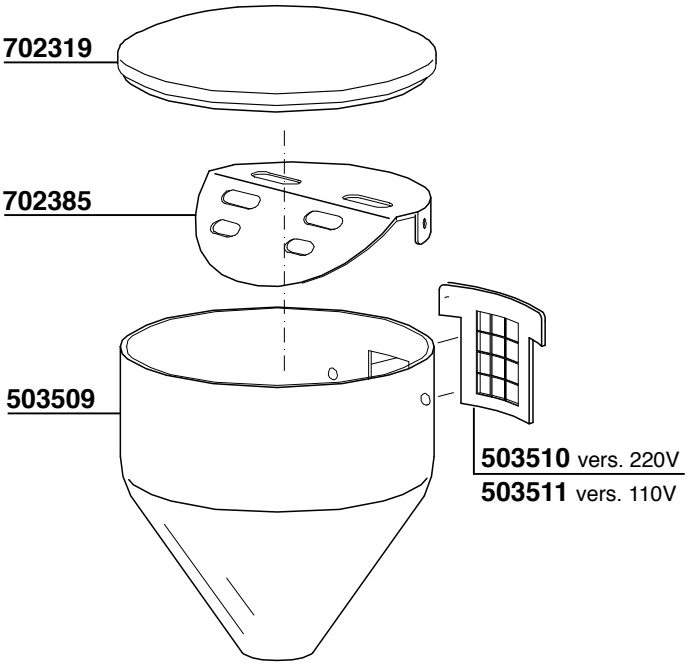

MOD. B

MACINACAFFE'

MAZZER MODEL: ROBUR DOSATORE

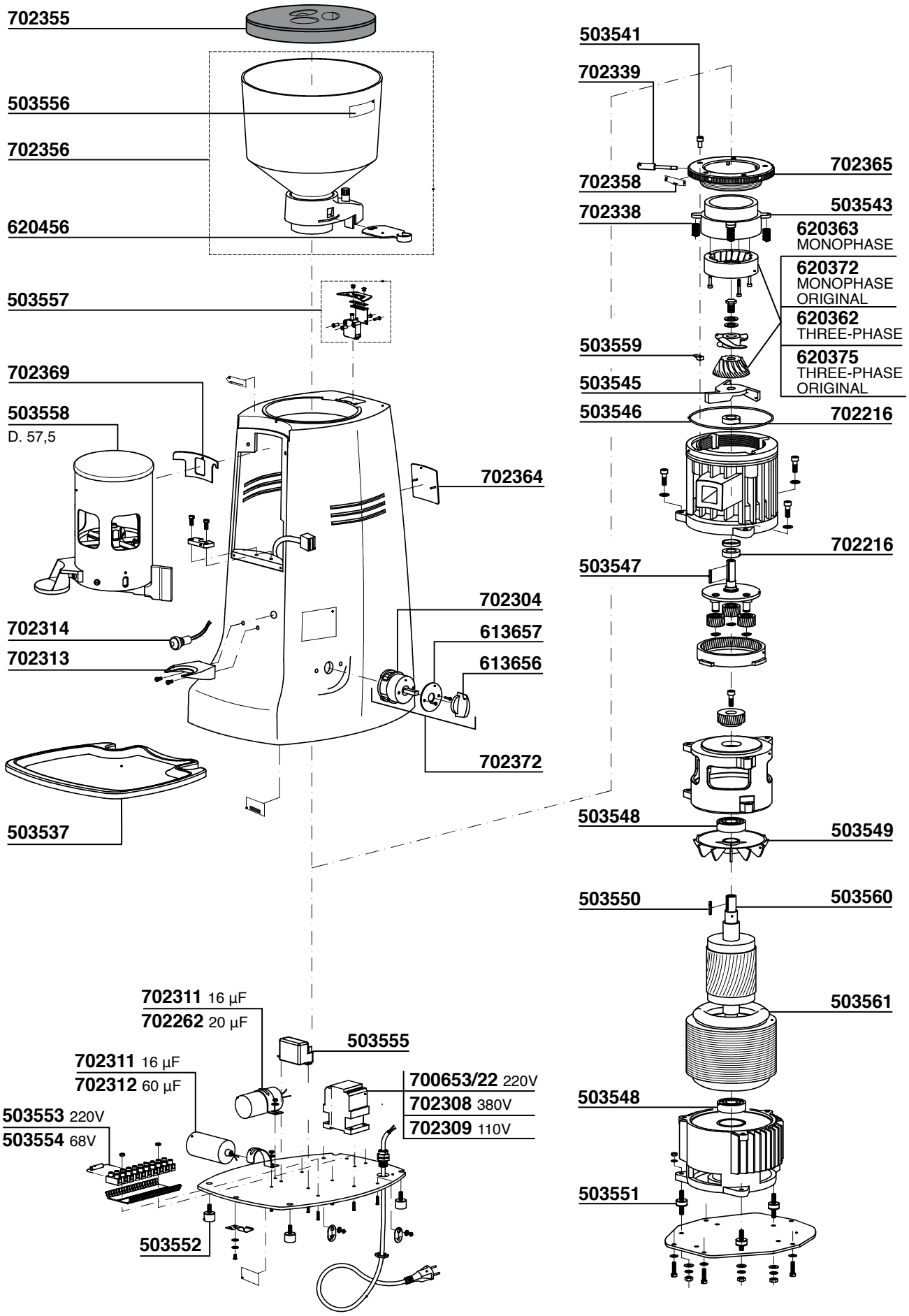

MACINACAFFE'

MAZZER MODEL: ROBUR DOSATORE

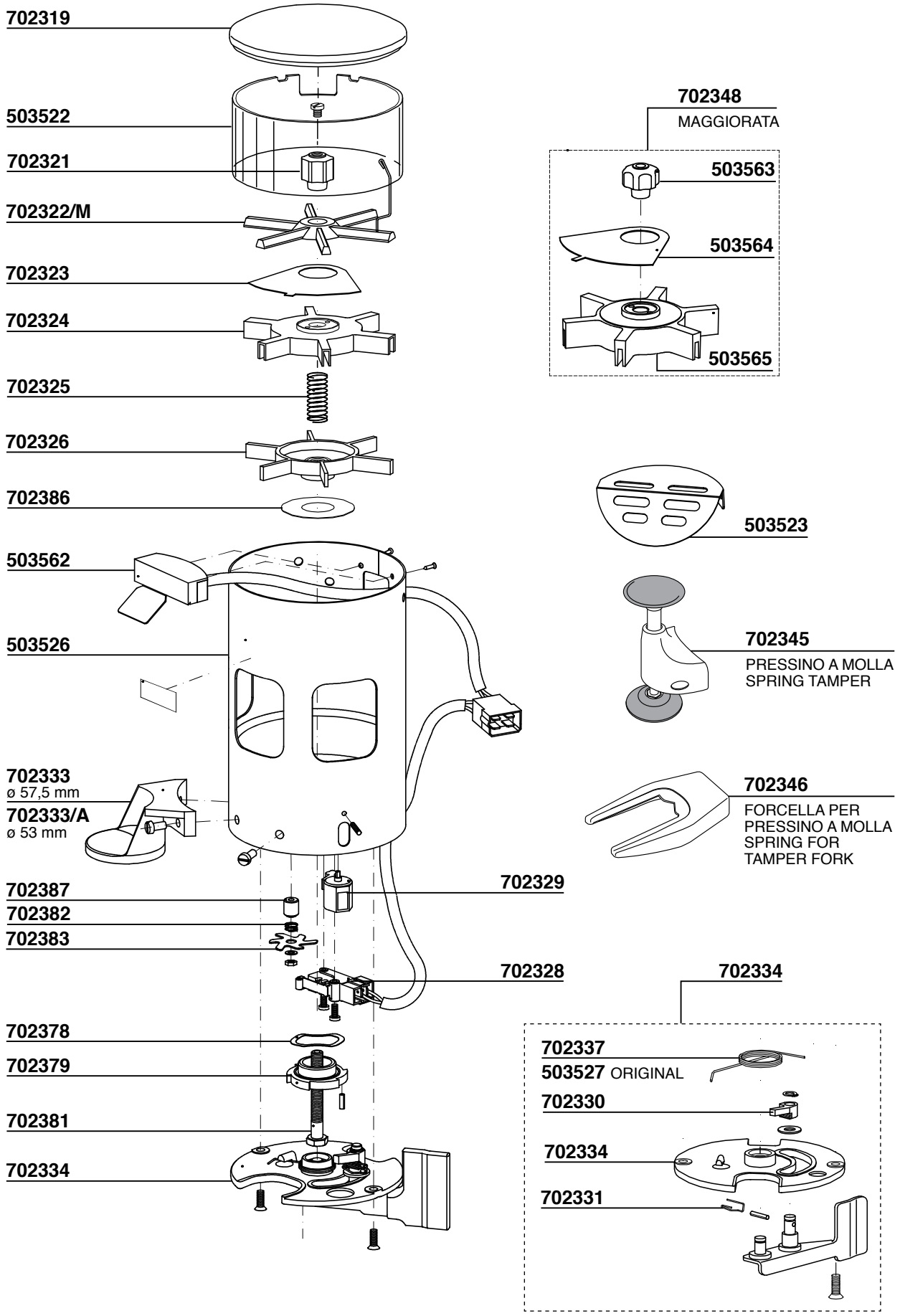

MACINACAFFE'

MAZZER MODEL: ROBUR ELETTRONICO

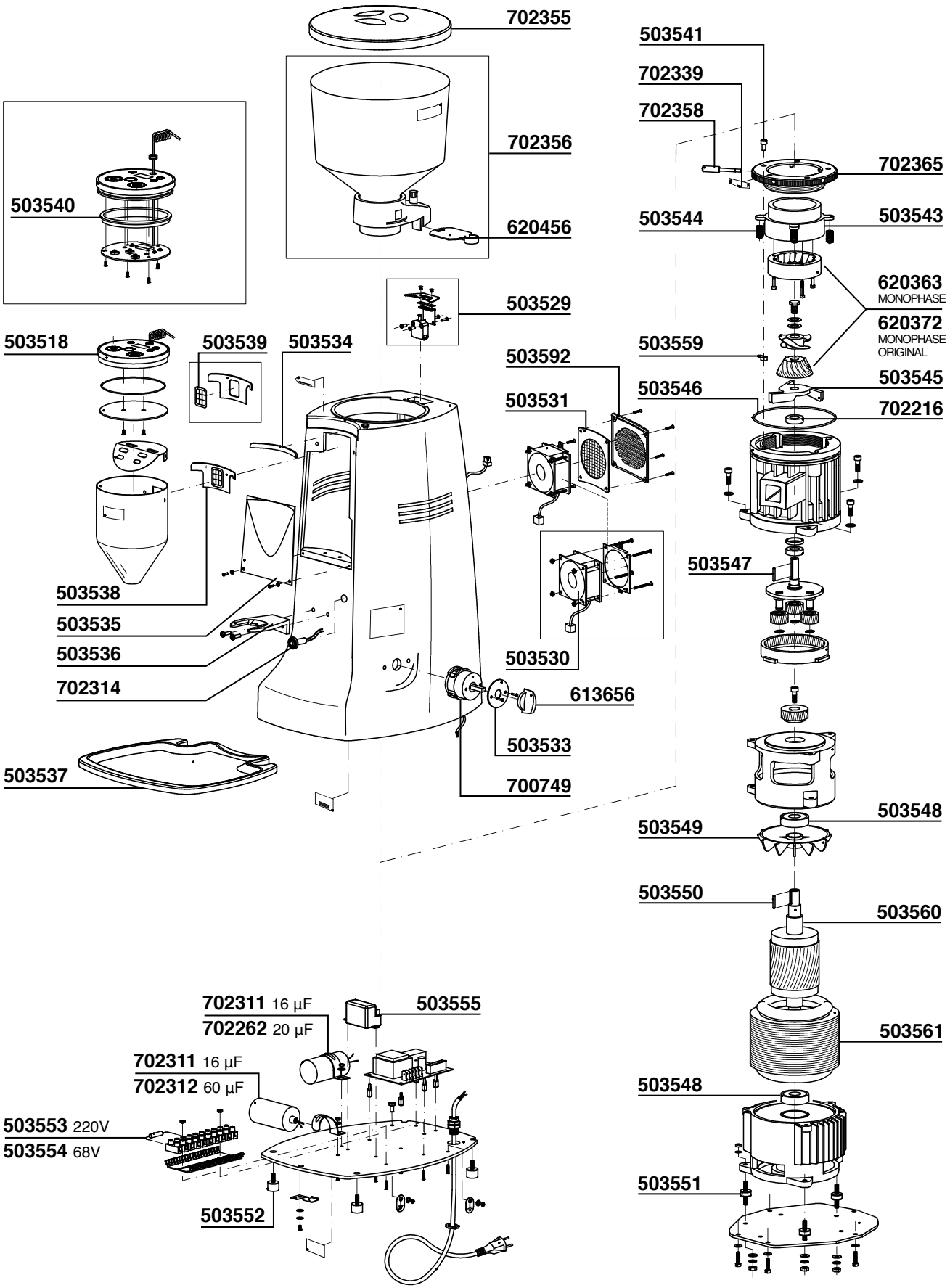

MACINACAFFE'

NUOVA SIMONELLI MODEL: GRINTA AMM-AMMT

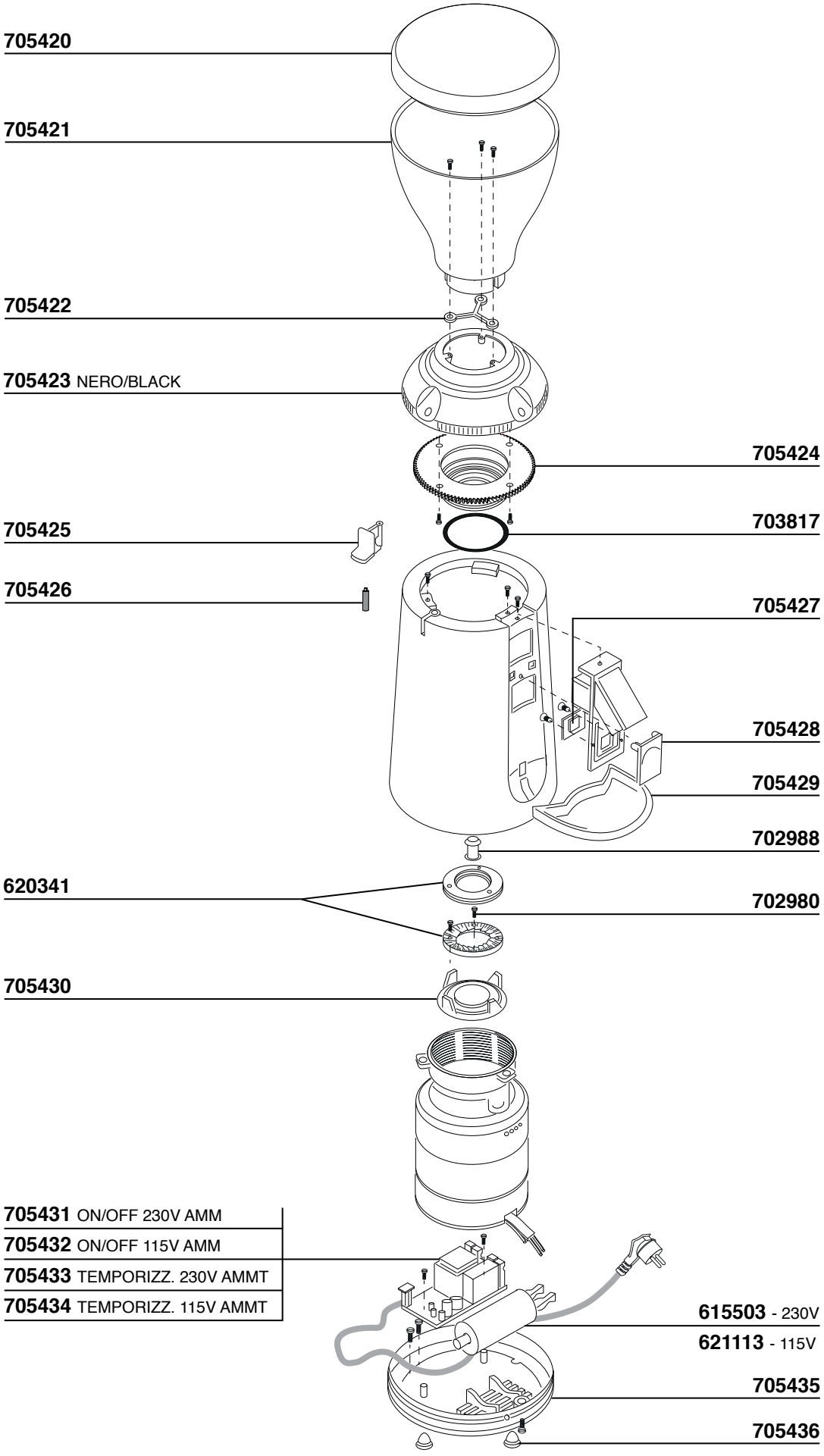

MACINACAFFE'

NUOVA SIMONELLI MODEL: MYTHOS ONE

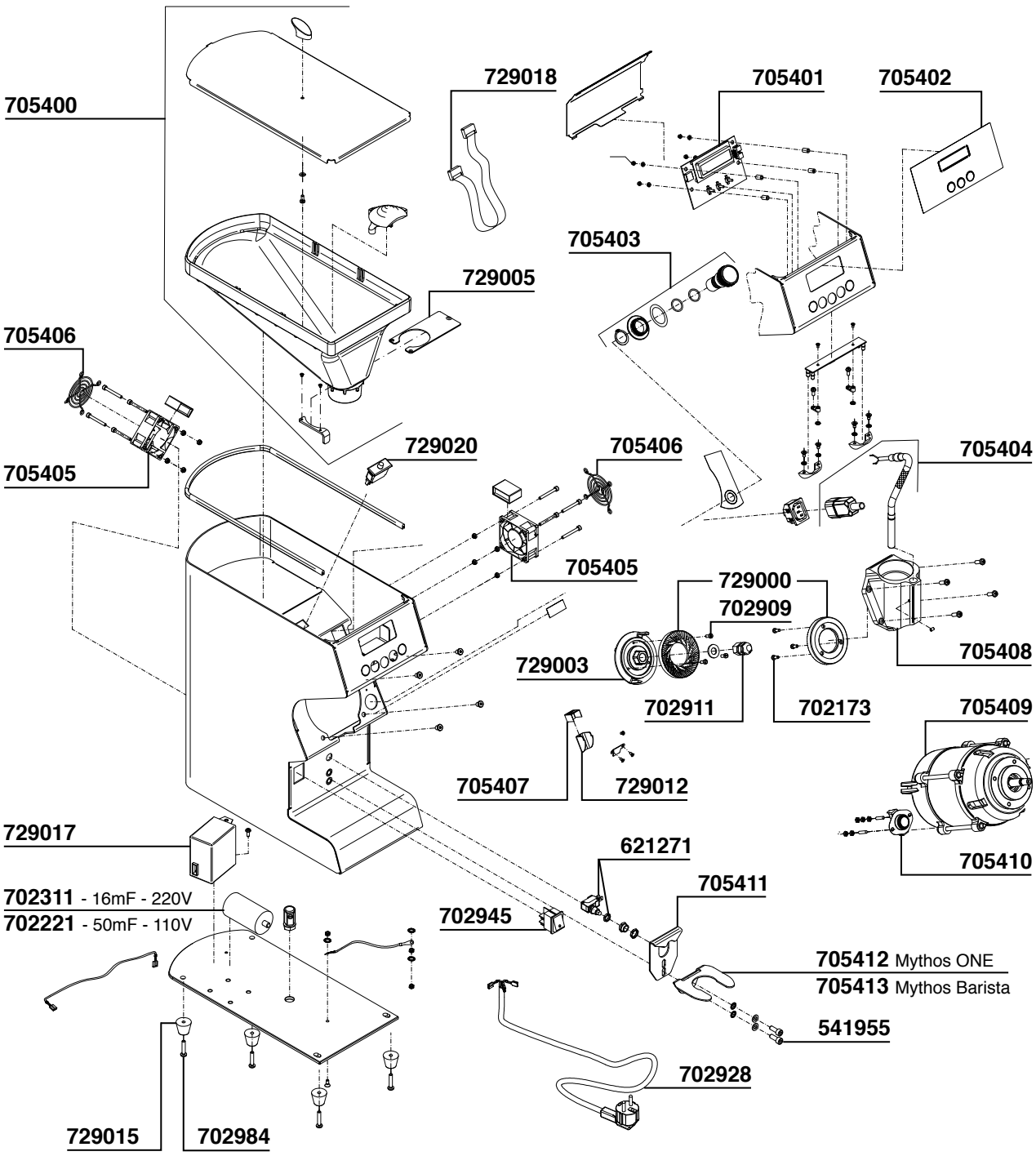

NUOVA RICAMBI MACINACAFFE' Tav. 43

OBEL MODEL:DSQ - NR1400 - NR900

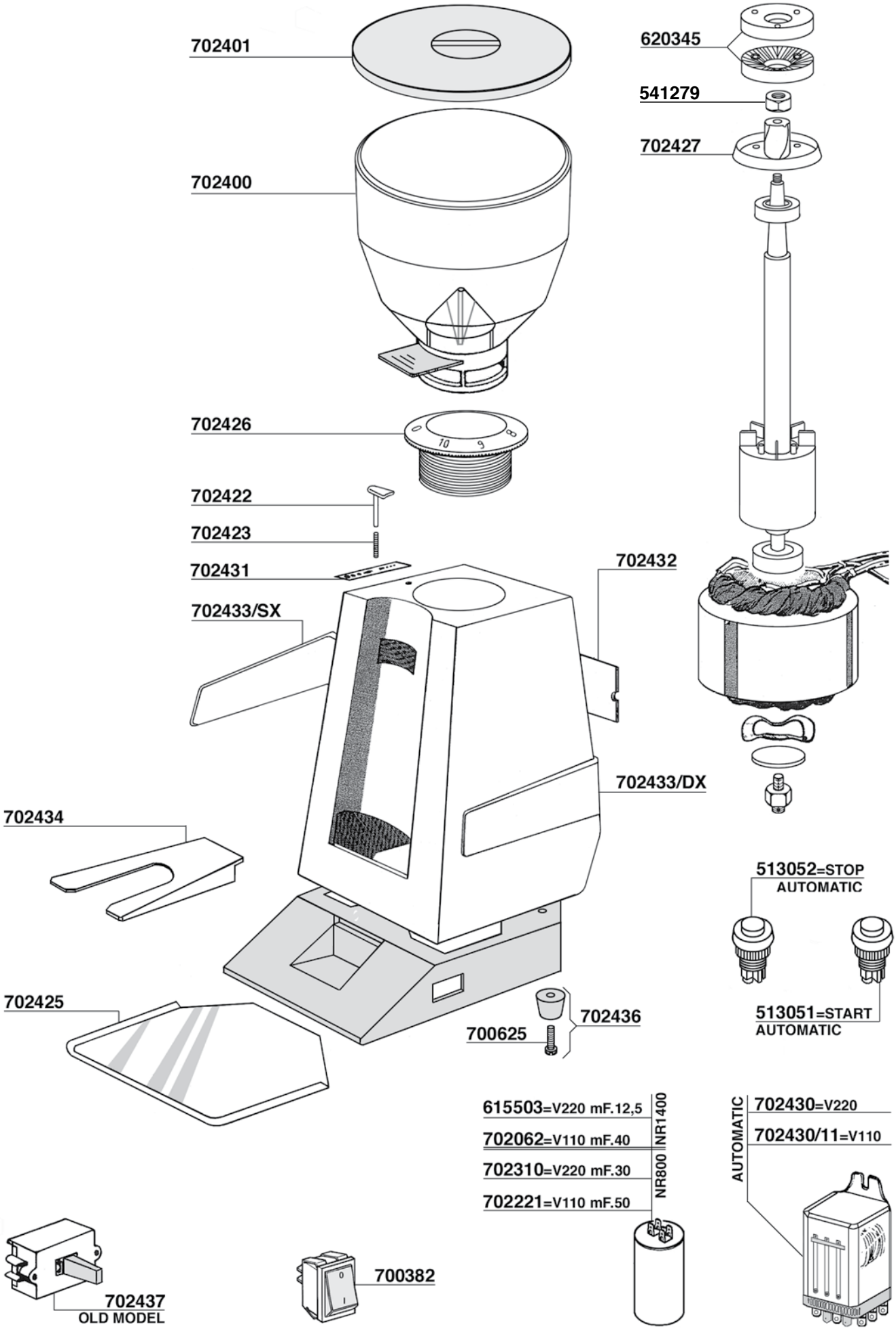

MACINACAFFE'

OBEL MODEL: EB

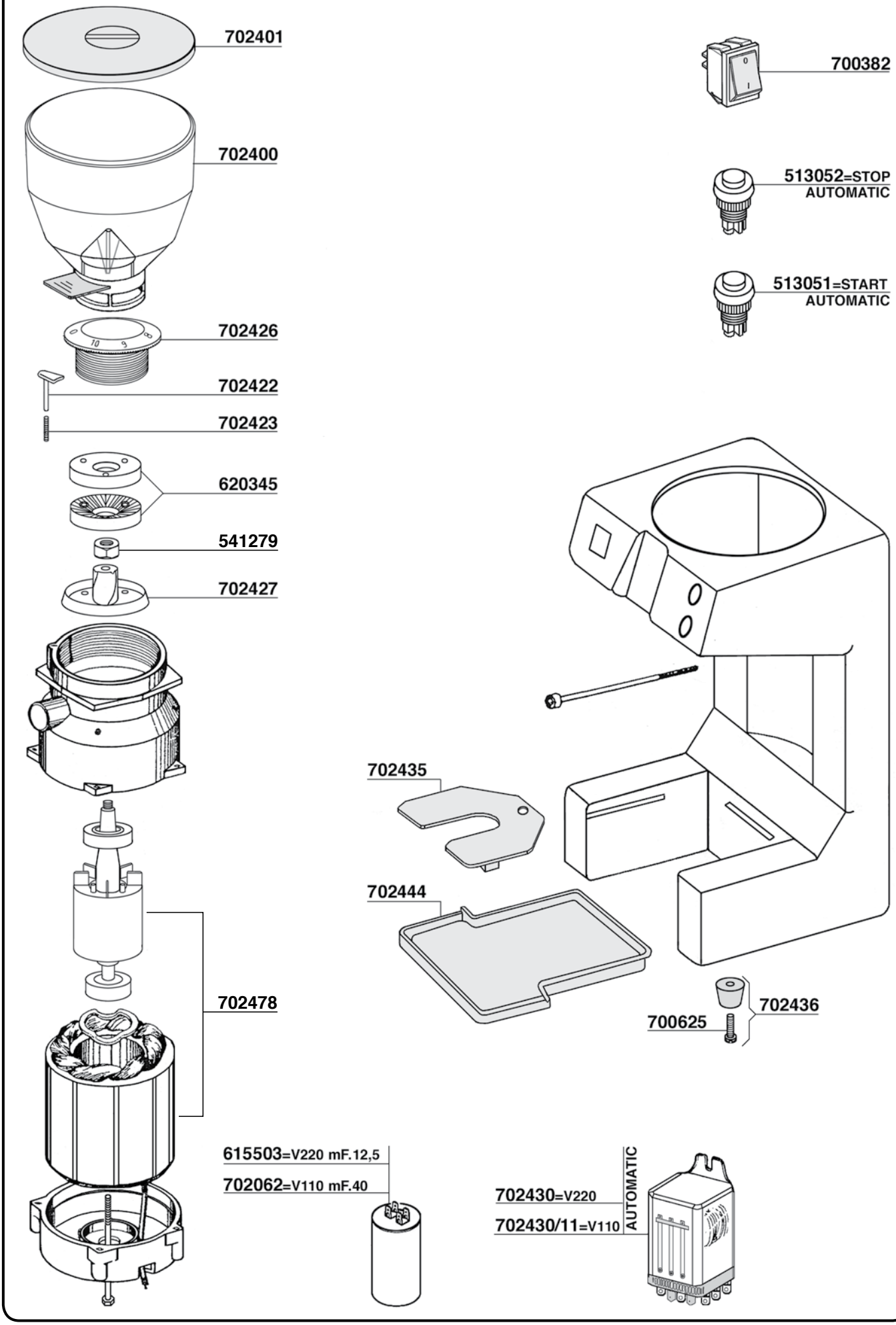

MACINACAFFE'

OBEL MODEL: DSQ-EB-NR1400-NR900-MITO

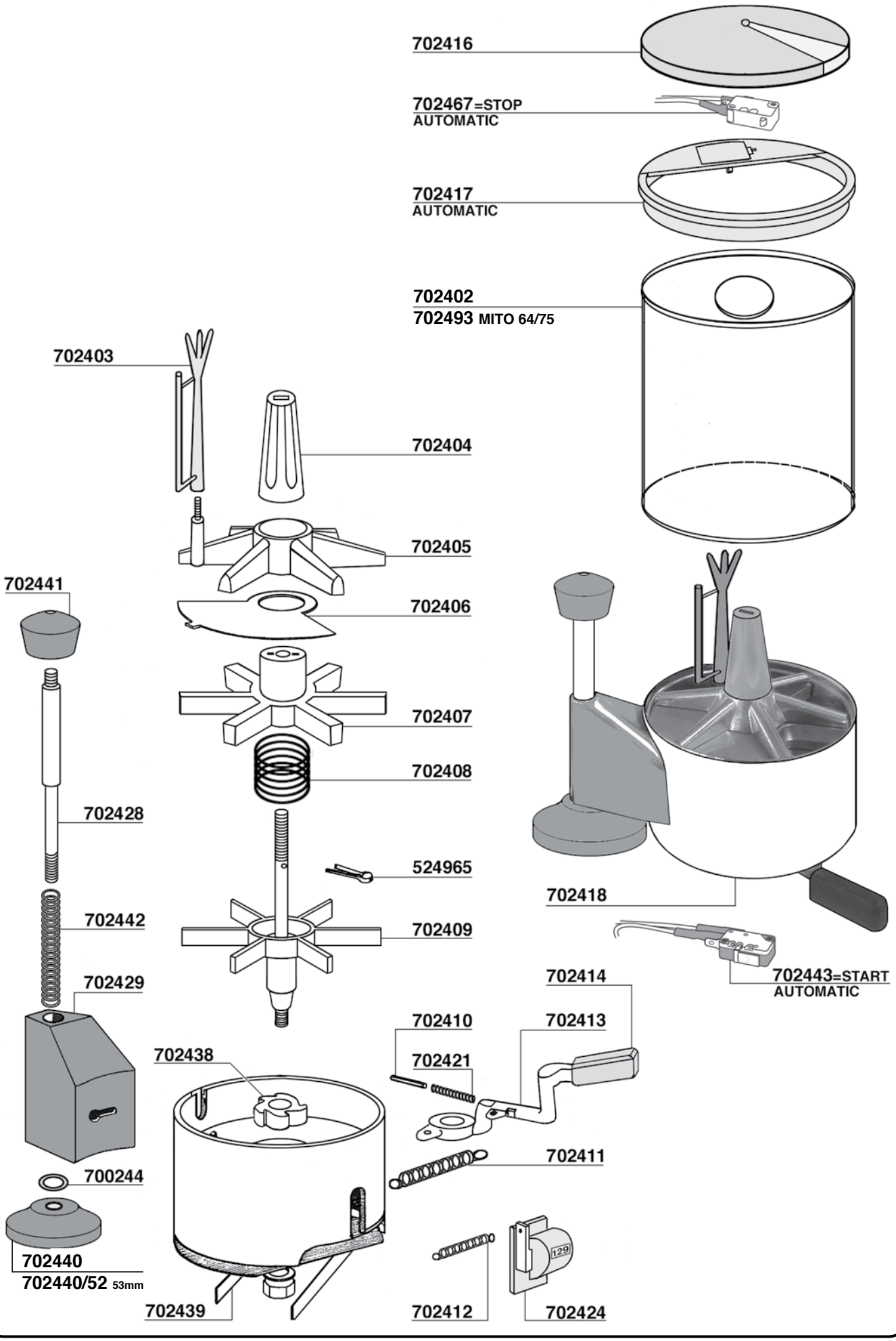

MACINACAFFE'

OBEL MODEL:JUNIOR - ROMA

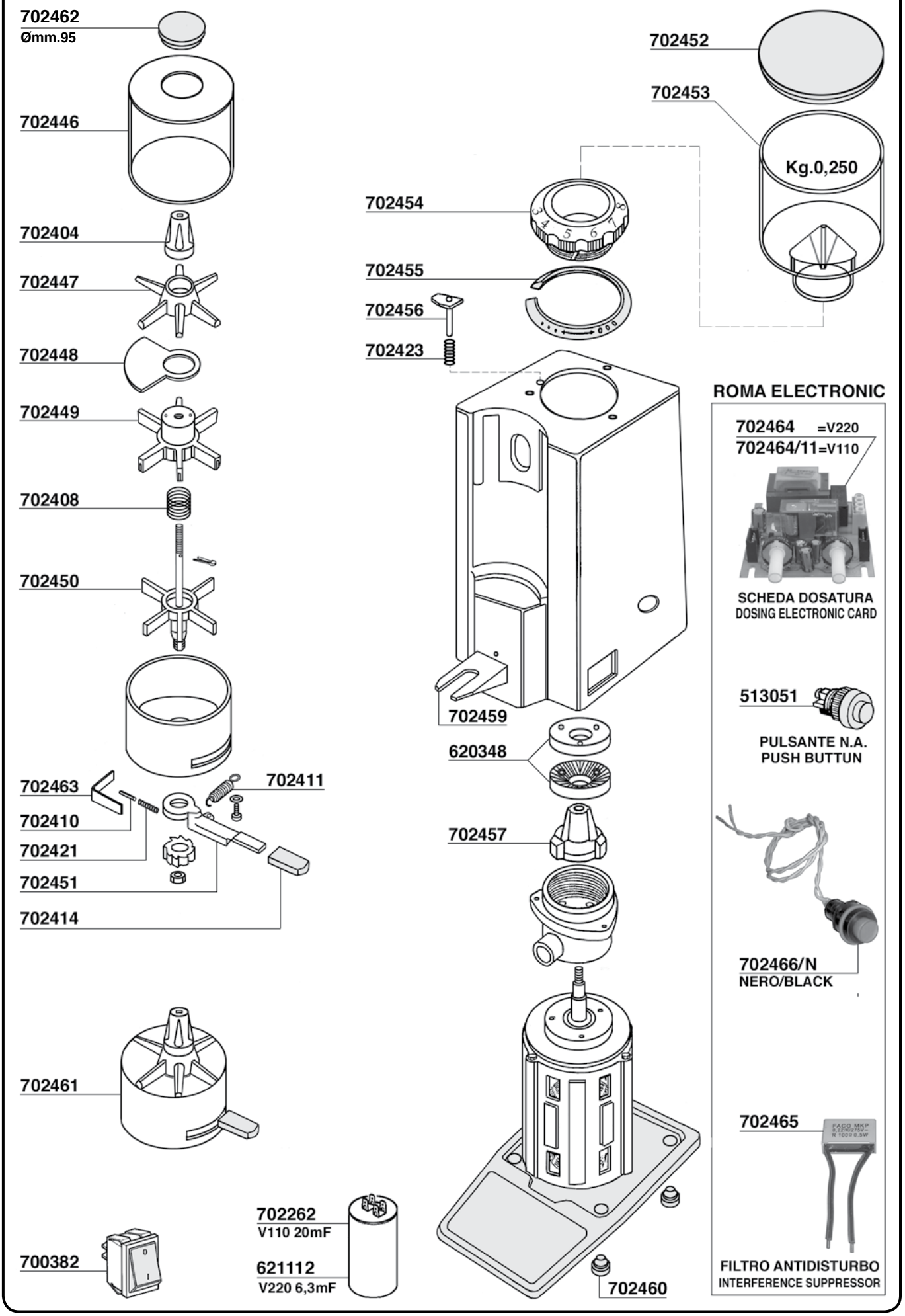

MACINACAFFE'

OBEL MODEL: MITO ATR – MITO ON DEMAND

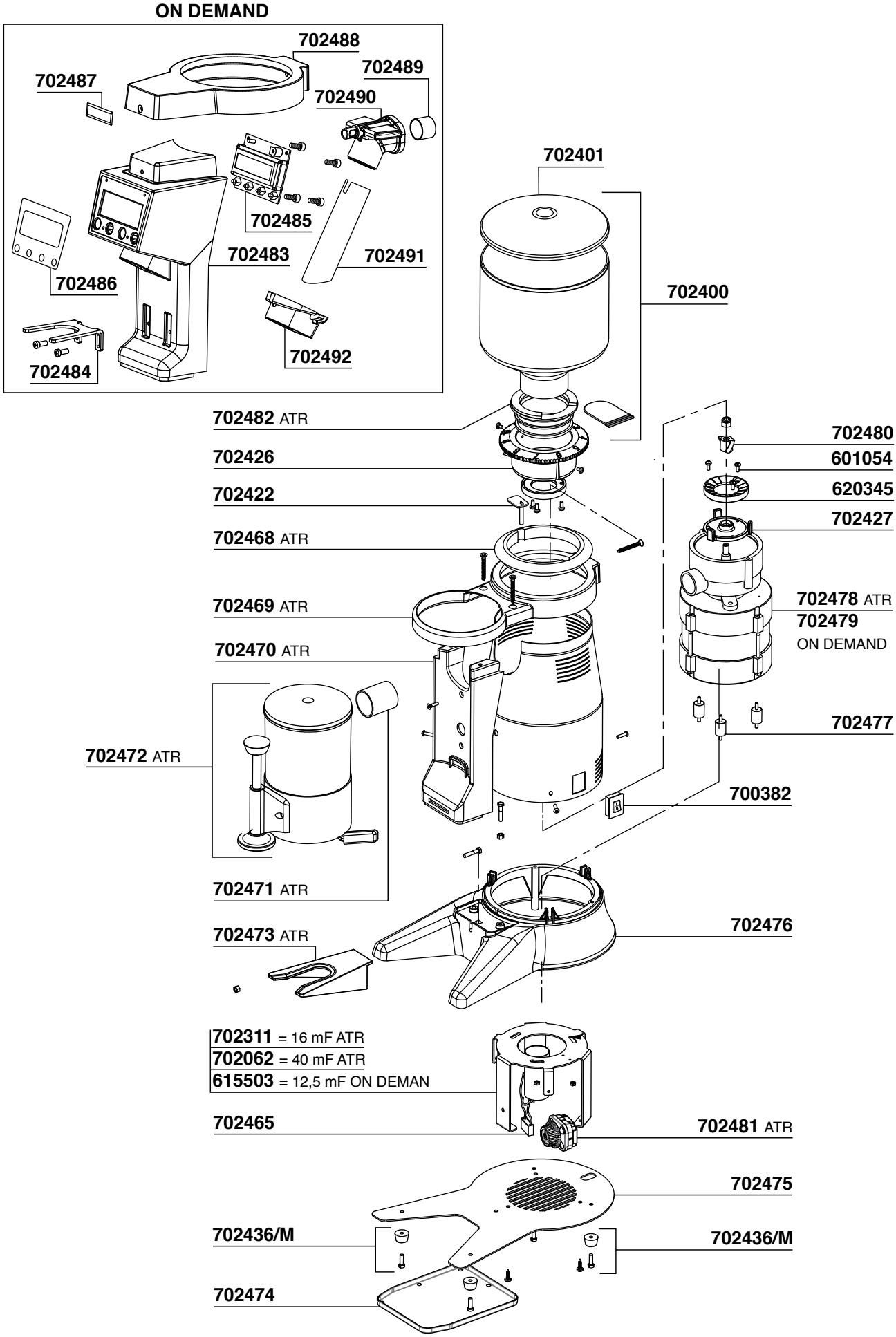

MACINACAFFE'

QUAMAR MODEL: T.80A - T.80E

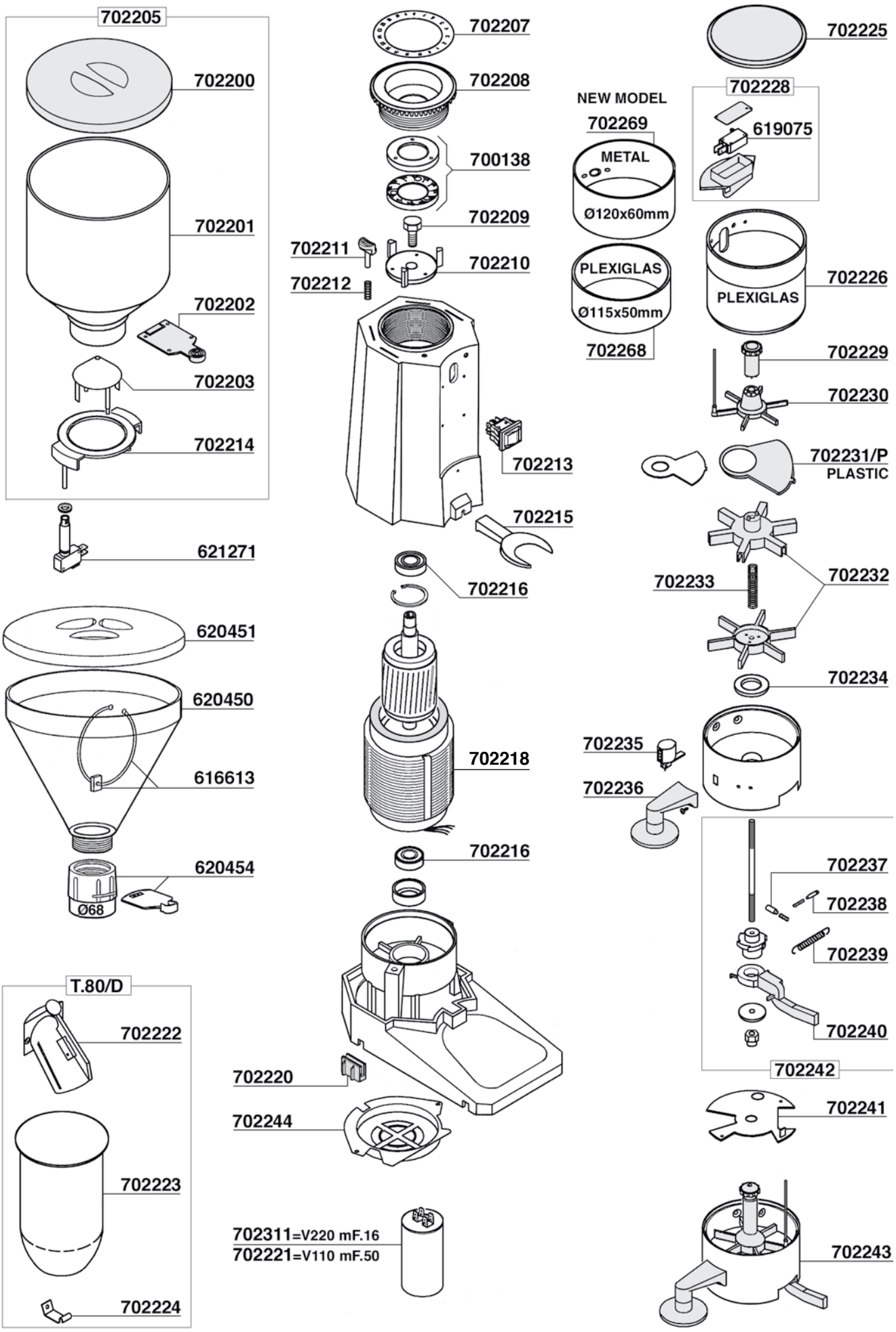

MACINACAFFE'

QUAMAR MODEL: T.48A

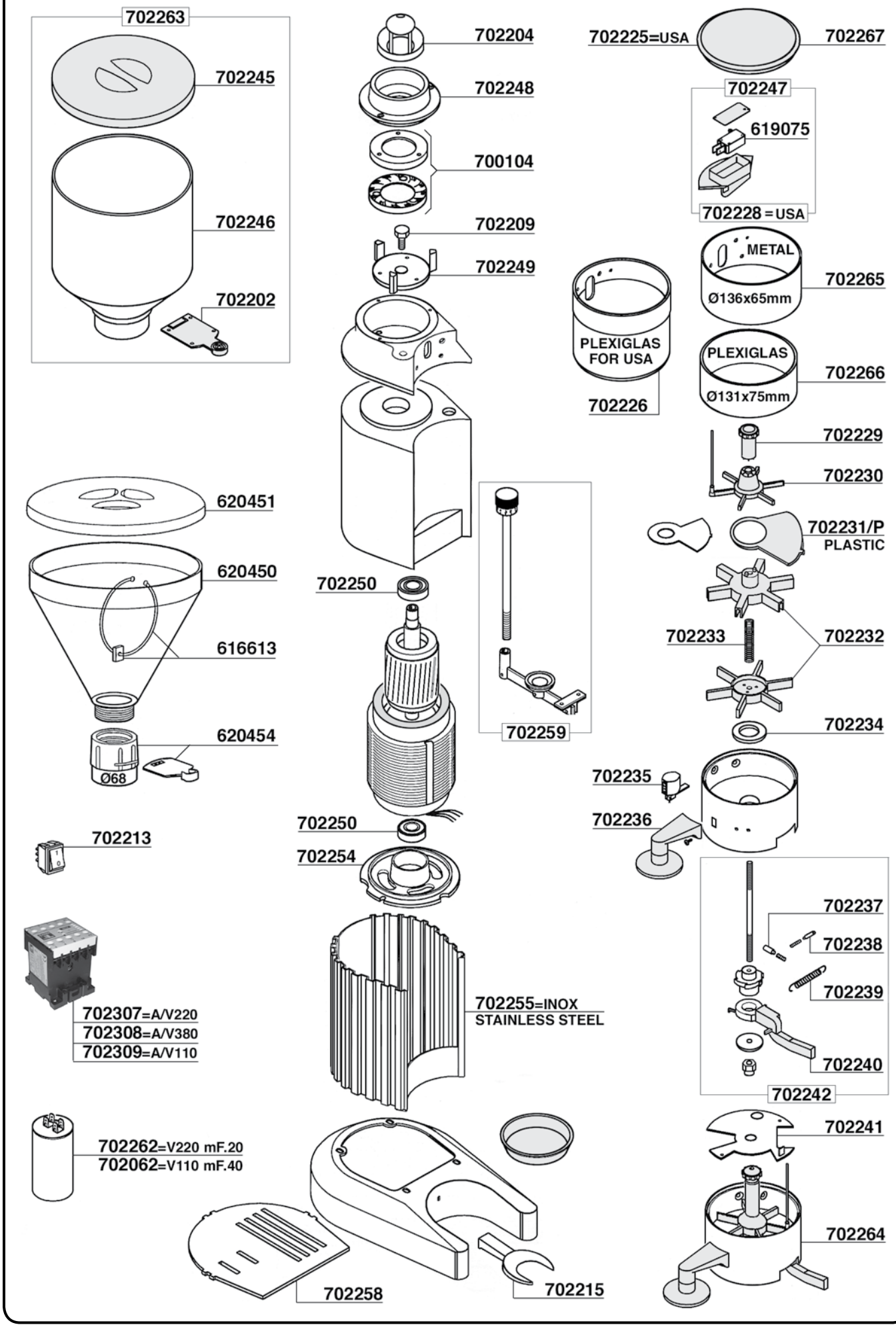

MACINACAFFE'

ROSSI MODEL: RR45 - CC45

S=MODEL MANUAL A=MODEL AUTOMATIC

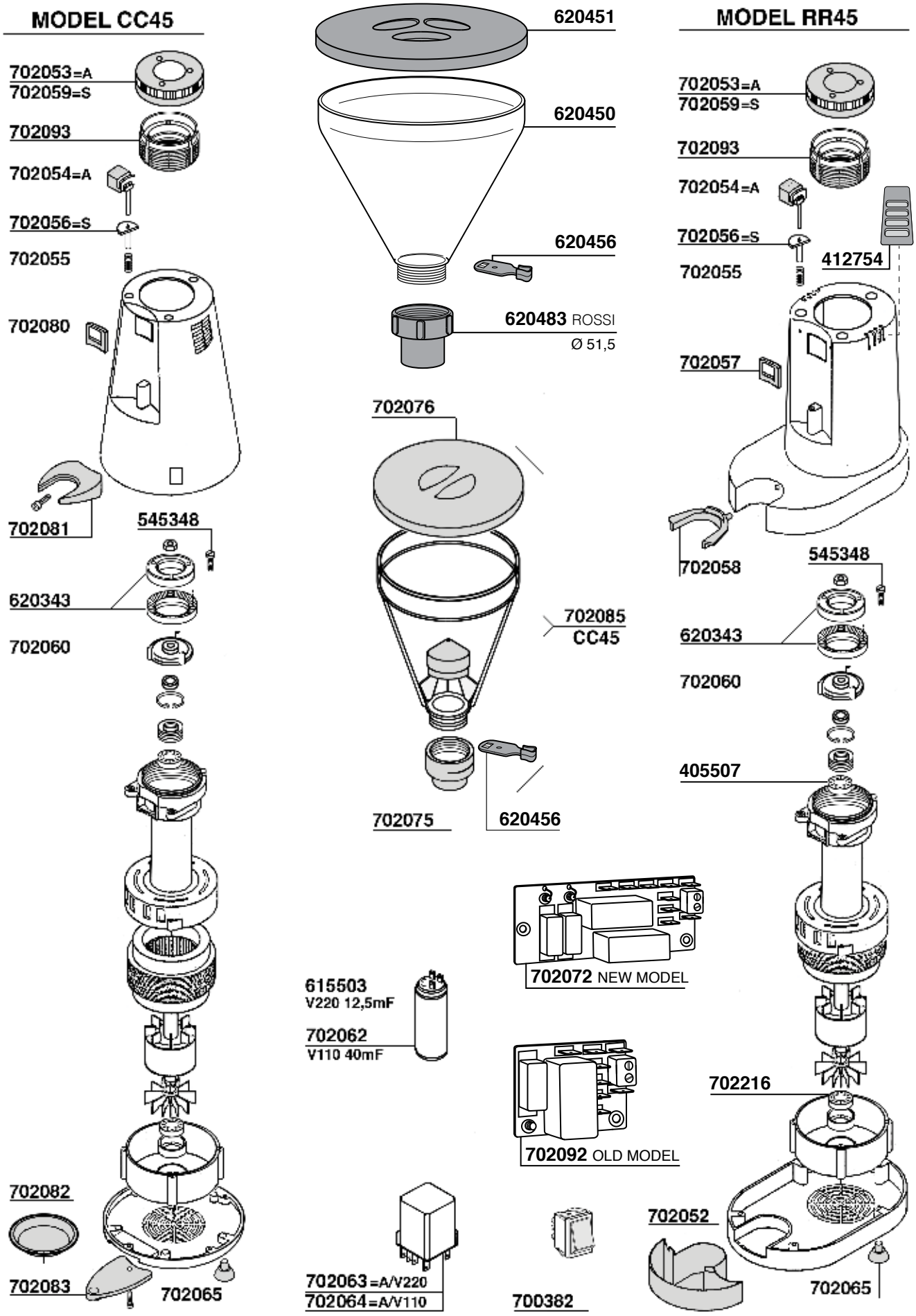

NUOVA RICAMBI MACINACAFFE' Tav. 51

ROSSI MODEL: RR45 - CC45

S=MODEL MANUAL A=MODEL AUTOMATIC

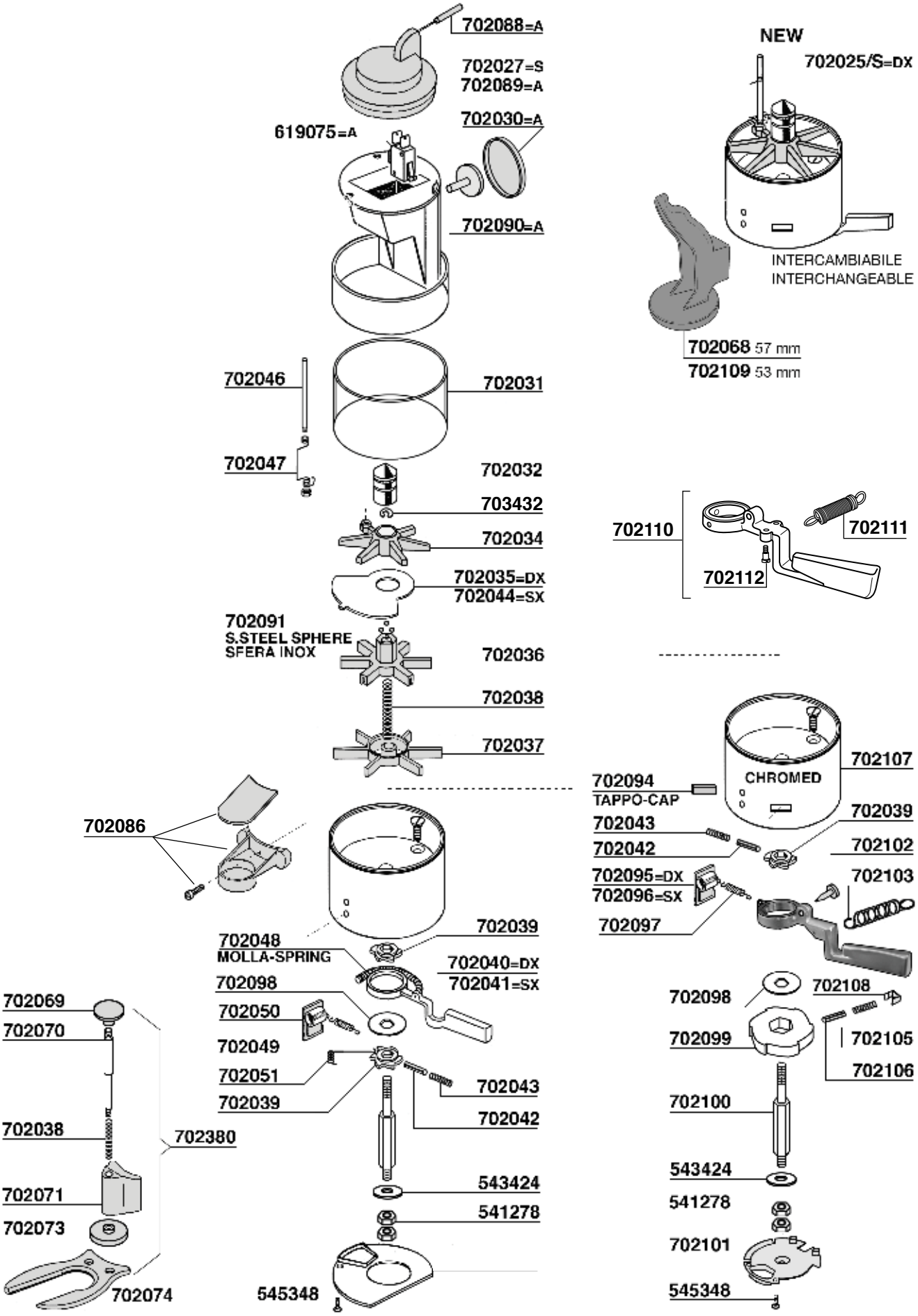

MACINACAFFE' CASA

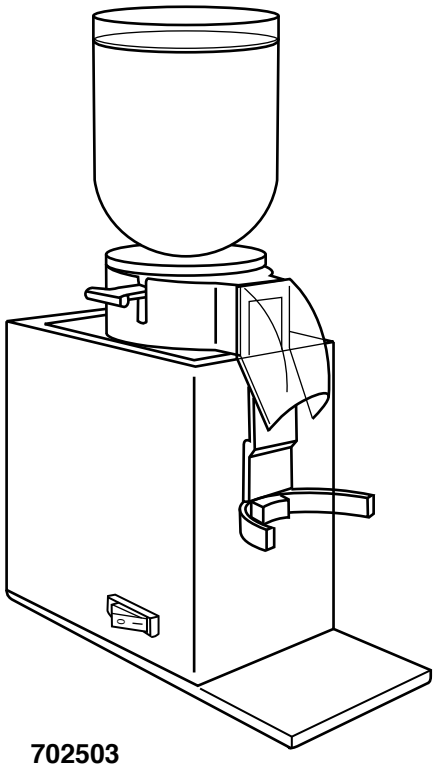

702503
MACINACAFFE' COMPLETO

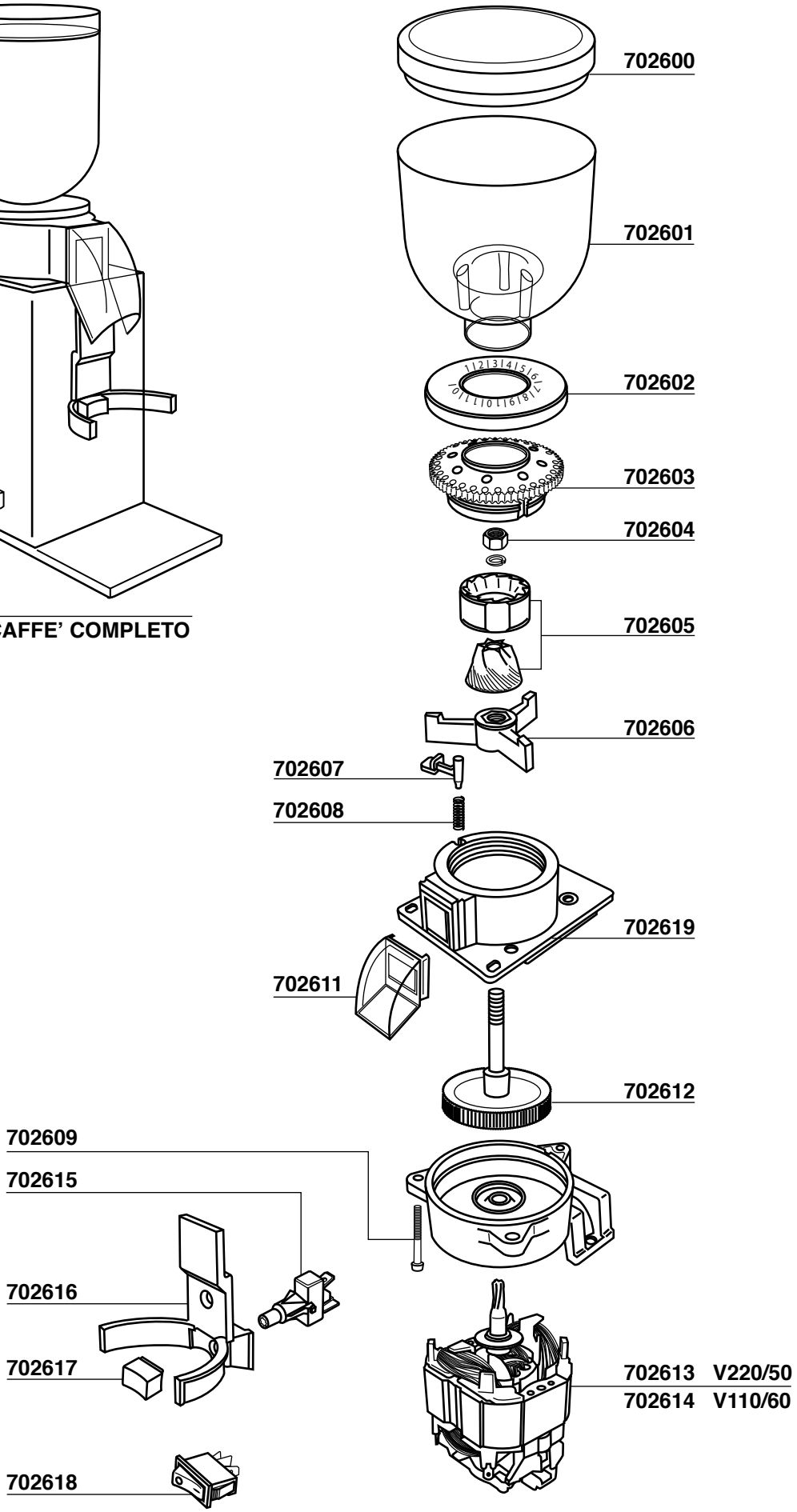

NUOVA RICAMBI ADATTATORI CAMPANE Tav. 53

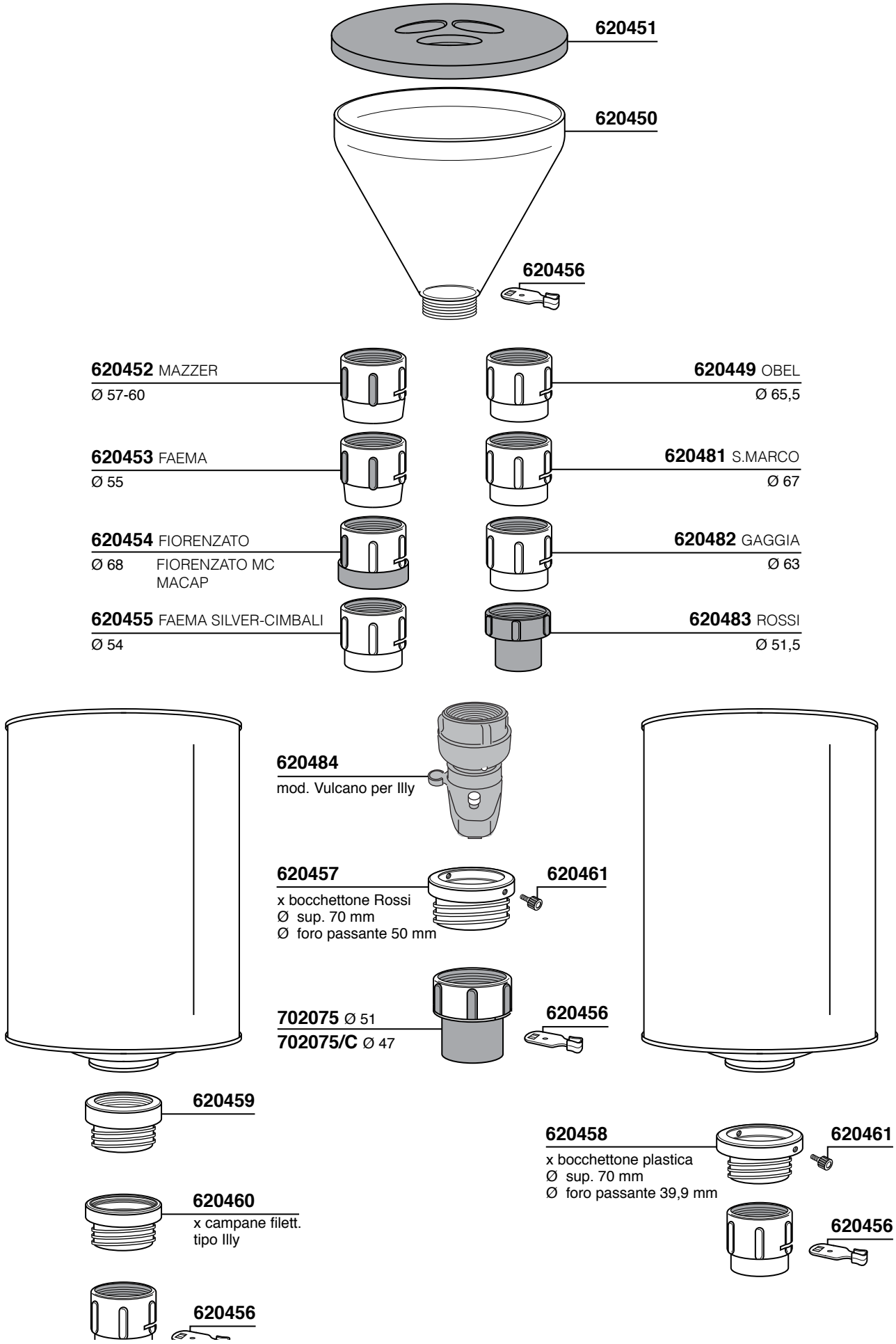

ADATTATORI PER CAMPANA ILLY Tav. 54

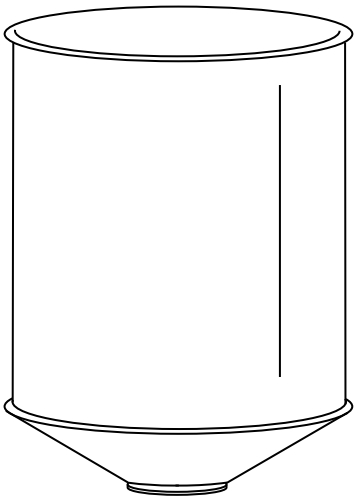

620456

620460
x campane filett.
tipo Illy

620452 MAZZER
Ø 57-60

620449 OBEL
Ø 65,5

620453 FAEMA
Ø 55

620481 S.MARCO
Ø 67

620454 FIORENZATO
Ø 68 FIORENZATO MC
MACAP

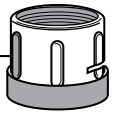

620482 GAGGIA
Ø 63

620455 FAEMA SILVER-CIMBALI
Ø 54

620483 ROSSI
Ø 51,5

CODICE *code*	MACINACAFFE' *coffee grinder*	ROTAZIONE *rotation*	Ø *out*	Ø *in*	SPESSORE *thickness*	FORI *holes*
702725	**ANFIM**	SX	50	30	7,5	3
700130	**ANFIM**	SX	54	32	8	3
700131	**ANFIM**	SX	64	36	9	3
700131/T	**ANFIM TITANIO**	SX	64	36	9	3
620351	**ANFIM - MACAF - OBEL GLOBO**	SX	75	43	9	3
620351/T	**ANFIM RIV. TITANIO**	SX	75	43	9	3
700136	**ANFIM 450 RPM**	SX	75	42	10	3
702605	**ARIETE-IMAT**	DX	38/30	7,2	17	-
700103	**AURORA**	SX	64	38	9	3
620340	**BRASILIA**	SX	50	31	8,5	3
620343	**BRASILIA**	SX	64	38	9	3
620342	**BRASILIA**	SX	83	45	10	3
700134	**CASADIO**	SX	64	35	10	2
700105	**CASADIO**	SX	84	45	10,5	3
620344	**CASADIO CONICHE**	DX	68	13c	25	4
620324	**CASADIO ENEA**	DX	63,5	38	9	3
620312	**CASADIO THEO**	DX	64	38	9	3
620313	**CASADIO THEO**	DX	84	45	9	3
620314	**CASADIO CONICHE THEO**	DX	68/49	11	25	4
700106	**CIMBALI**	DX	54	32	9	3
700102	**CIMBALI-DRM-6S (sesta serie)**	DX	64	37	9	3
700172	**CIMBALI-DRM PIANA (x coniche)**	DX	68	43	7,5	3
620366	**CUNIL MG19**	SX	59	30	9	3
620367	**CUNIL MG21**	SX	59	33/30	9	3/0
620352	**EROS CONICHE**	DX	68	13	25	-
620341	**EUREKA**	DX	50	30	7,5	3
620302	**EUREKA**	DX	65	38	9	3
620322	**EUREKA TRIFASE**	DX	65	38	9	3
620303	**EUREKA**	DX	60	38	9	3
620344	**EUREKA CONICHE**	DX	68	13c	25	4
620349	**EUREKA**	DX	74	38	9	3

CODICE *code*	MACINACAFFE' *coffee grinder*	ROTAZIONE *rotation*	Ø *out*	Ø *in*	SPESSORE *thickness*	FORI *holes*
729000	**EUREKA MYTHOS TITANIO**	DX	75	38	9	3
508962	**FAEMA FP - FUTURMAT**	SX	54	31	8	3
616730	**FAEMA MP - MPN**	DX	54	31	8	3
508880	**FAEMA FM**	SX	62	38	9	3
619956	**FAEMA SILVER - BNZ**	DX	64	38	9	3
631470	**FAEMA MC CONICHE-BNZ-CIMBALI CONIK**	DX	68	11	25	4
633539	**FAEMA MD 2000-3000-MAGNUM**	DX	75	43	9	3
700138	**FIORENZATO - FIORENZATO DOGE**	DX	63	38	9	3
620354	**FIORENZATO**	SX	63	38	9	3
620364	**FIORENZATO DOGE CONICHE**	DX	71	13c	25	3
700104	**FIORENZATO-FIORENZATO DOGE-CEADO MC**	DX	83	45	9,5	3
620319	**FIORENZATO M.C. F5**	DX	64	37	8,5	3
620320	**FIORENZATO M.C. F6**	DX	83	49	9,5	3
720049	**FIORENZATO F64E ON DEMAND**	DX	64	37	8,5	3
720057	**FIORENZATO F64EVO**	DX	64	37	8,5	3
620347	**GAGGIA BABY**	DX	50	30	7,5	3
700141	**GAGGIA - ARISTARCO**	DX	58	36	8	3
700108	**GAGGIA - ARISTARCO**	DX	64	37	8,5	3
620310	**GAGGIA - ARISTARCO**	DX	74	42	9,5	3
700133/4	**GAGGIA - ARISTARCO**	DX	84	46	9	3
700133/5	**GAGGIA MILANO**	DX	85	44	9	3
702824	**MC4 - MC5 1.400 giri**	DX	58	33	8,5	3
620300	**MC6 - MX 1.400 giri**	DX	65	38	8,5	3
620304	**MC6 - MX 900 giri**	DX	65	38	8,5	3
620301	**MC7 - M7**	DX	75	42	9	3
620308	**M4D - M5D**	DX	58	34	8,5	3
620306	**M7A900**	DX	75	42	9	3
620365	**MXK CONICHE-FIORENZATO F63K**	DX	63	13c	23	3
620344	**M7K CONICHE**	DX	68	13c	25	4
700110	**MACDOBAR**	DX	57	37	6	2
700108	**MACDOBAR**	DX	64	37	8,5	3

CODICE *code*	MACINACAFFE' *coffee grinder*	ROTAZIONE *rotation*	Ø *out*	Ø *in*	SPESSORE *thickness*	FORI *holes*
620305	**MAHLKÖNIG K30**	SX	65	38	8,5	2
620305/11	**MAHLKÖNIG K110**	SX	65	38	8,5	2
620323	**MAHLKÖNIG K30-EK43**	SX	98	54	9	3
620378	**MAZZER LUX MONOFASE**	DX	61	35	8,5	3
620358	**MAZZER MINI (dosatore) FIORENZATO M.C. F4 - COMPAK K3**	DX	58	33	8,5	3
620373	**MAZZER MINI (dosatore) ORIGINAL**	DX	58	33	8,5	3
620376	**MAZZER MINI ON DEMAND ORIGINAL**	DX	64	37	8,5	3
700108	**MAZZER JOLLY MONOFASE**	DX	64	37	8,5	3
700108/T	**MAZZER JOLLY ORIGINAL TRIFASE**	DX	64	37	8,5	3
700108/M	**MAZZER JOLLY ORIGINAL MONOFASE FOR DOSER AND ON DEMAND**	DX	64	37	8,5	3
700135	**MAZZER MAJOR**	DX	83	49	9	3
700135/T	**MAZZER MAJOR TRIFASE**	DX	83	49	9	3
700135/M	**MAZZER MAJOR ORIGINAL MONOF. FOR DOSER AND ON DEMAND**	DX	83	49	9	3
700135/TM	**MAZZER MAJOR ORIGINAL TRIF.-ROYAL MONOF.**	DX	83	49	9	3
700132	**MAZZER MAYOR ORIGINAL TRIF. ROYAL MONOF. TITANIO**	DX	83	49	9	3
620362	**MAZZER ROBUR CONICHE TRIF.**	DX	83	14c	25	3
620375	**MAZZER ROBUR-KOLD ORIGINAL TRIF**	DX	83	14c	25	3
620363	**MAZZER ROBUR CONICHE MONOF.**	DX	71	14C	25	3
620372	**MAZZER ROBUR-KOLD ORIGINAL C. M. FOR DOSER AND ON DEMAND**	DX	71	14c	25	3
620371	**MAZZER KONY CONICHE MONOFASE**	DX	63	12c	23	3
620369	**MAZZER KONY ORIGINAL C.M. FOR DOSER AND ON DEMAND**	DX	63	12c	23	3
620370	**MAZZER KONY CONICHE TRIFASE**	DX	67	14c	23	3
620341	**NUOVA SIMONELLI GRINTA**	DX	50	30	7,5	3
620348	**OBEL JUNIOR**	SX	50	31	8	3
620345	**OBEL DSQ - EB**	SX	64	38	9	3

CODICE *code*	MACINACAFFE' *coffee grinder*	ROTAZIONE *rotation*	Ø *out*	Ø *in*	SPESSORE *thickness*	FORI *holes*
700103	**OBEL TRIFASE**	SX	64	38	9	3
700139	**QUICK MILL**	SX	66	35	9	3
700138	**QUAMAR**	DX	63	38	9	9
700128	**QUAMAR ON DEMAND**	DX	63	38	9	3
620348	**RANCILIO ROCKY-JACKY MD40**	SX	50	31	8	3
700103	**RANCILIO MD50**	SX	64	38	9	3
700140	**RANCILIO MD80**	SX	75	43	10,5	3
620343	**ROSSI**	SX	64	38	9	3
620344	**ROSSI CONICHE**	DX	68	13c	25	4
620353	**SAECO**	SX	43	25	7	3
620359	**SAECO CONICHE**	DX	40/48	10	20	-
620355	**SAN MARCO**	DX	64	37	8,5	3
620310	**SAN MARCO**	DX	74	42	9,5	3
700133/4	**SAN MARCO**	DX	84	46	9	3
620321	**SAN MARCO SEMICONICA MK-LK**	DX	84	46	9	3
620360	**SAN MARCO CONICHE**	DX	68	13c	25	4b
620346	**SANTOS**	SX	64	38	9	3
620354	**WEGA - FIORENZATO**	SX	63	38	9	3
620356	**WEGA - COMPAK**	DX	64	38	9	3
620357	**WEGA - COMPAK**	DX	80	41	10	3
620307	**WEGA-COMPAK - OBEL CONICHE**	DX	68/49	13	25	4

MACINE FOOD FRIENDLY

CODICE *code*	MACINACAFFE' *coffee grinder*	ROTAZIONE *rotation*	Ø *out*	Ø *in*	SPESSORE *thickness*	FORI *holes*
633536	**CIMBALI-DRM-6S**	DX	64	37	9	3
633534	**FAEMA MC CONICHE-BNZ-CIMBALI CONIK**	DX	68	11	25	4
633538	**FAEMA MD 2000-3000**	DX	75	43	9	3
633531	**MACAP CONICHE MONOFASE**	DX	68	13c	25	4
633537	**MAZZER JOLLY MONOFASE**	DX	64	37	8,5	3
633530	**MAZZER KONY CONICHE MONOF.**	DX	63	12c	23	3
633540	**MAZZER MAJOR**	DX	83	49	9	3
633535	**MAZZER ROBUR C.M.**	DX	71	14c	25	3
633532	**RANCILIO**	SX	64	38	9	3
633541	**ROSSI/BRASILIA**	SX	64	38	9	3
633542	**OBEL DSQ-EB**	SX	64	38	9	3
633543	**WEGA-COMPAK**	DX	64	38	9	3
633544	**WEGA-COMPAK-OBEL CONICHE**	DX	68/49	13	25	4

MACINE INDUSTRIALI

620311	**CIAT**	DX	108	38	11	3
620311/13	**CIAT**	DX	108	38	13	3
620309	**CIAT mod MT4-VITTORIA mod MS9**	SX	123	45	12	3
620315	**DITTING mod KF/KFR 804**	SX	80	40	9	2
620316	**DITTING mod KF/KFA/KFR 903**	SX	90	45	9	2
620317	**DITTING mod KF/KFA/KFR 1203**	SX	120	60	9	4
620318	**DITTING mod KF/KFA/KFR 1403**	SX	140	70	9	4
620329	**PETRONCINI ORIGINAL mod S/2-10**	DX/SX	120	50	10	4

Pressino 'Style' legno/inox
Prodotto da Nuova Ricambi.

620446 ø 49mm
620447 ø 50mm
620448 ø 51mm
620867 ø 58mm
620868 ø 53mm

Pressino 'Style' legno/inox con base convessa soft.
Prodotto da Nuova Ricambi.

620872 ø 57.5mm
620873 ø 53mm

'Style' Wodden-stainless steel tamper
Made by Nuova Ricambi.

620446 ø 49mm
620447 ø 50mm
620448 ø 51mm
620867 ø 58mm
620868 ø 53mm

'Style' Wodden-stainless steel tamper with soft convex base
Made by Nuova Ricambi.

620872 ø 57.5mm
620873 ø 53mm

Pressino dinamometrico regolabile lucido
Prodotto da Nuova Ricambi.
Ideale per una costante pressione sul caffè macinato.
Pressione regolabile 11-14 kg.
Permette l'uso di una macinatura più grossa che riscalda meno il caffè e limita l'usura delle macine.

Disco Alluminio
620870 ø 58mm
620870/C ø 58,3mm
620871 ø 53mm

Disco Acciaio Inox
620874 ø 58mm
620875 ø 53mm

Adjustable polished stainless steel dynamometric tamper
Made by Nuova Ricambi.
Ideal for a constant pressure on ground coffee. Adjustable pressure 11-14 kg. It allows the use of coarser ground coffee, resulting in the coffee heating up less and the burrs lasting longer.

Aluminium Disc
620870 ø 58mm
620870/C ø 58,3mm
620871 ø 53mm

Stainless Steel Disc
620874 ø 58mm
620875 ø 53mm

Pressino 'Competizione' legno/inox
Prodotto da Nuova Ricambi.

620890 ø 53mm
620891 ø 57,5mm
620892 ø 58,3mm
620893 ø 58,5mm

'Competizione' Wodden-stainless steel tamper
Made by Nuova Ricambi.

620890 ø 53mm
620891 ø 57,5mm
620892 ø 58,3mm
620893 ø 58,5mm

Pressino alluminio
Prodotto da Nuova Ricambi.

620438 ø 58mm
620439 ø 53mm
620444 ø 51mm
620445 ø 49mm

Alluminium Tamper
Made by Nuova Ricambi.
zzzzzzaz
620438 ø 58mm
620439 ø 53mm
620444 ø 51mm
620445 ø 49mm

Pressino acciaio inox

620894 ⌀ 53mm

Coffee Tamper Stainless steel

620894 ⌀ 53mm

Pressino acciaio inox

620895 ⌀ 57mm

Stainless steel Tamper

620895 ⌀ 57mm

Pressino acciaio inox

620852 ⌀ 58mm

Stainless steel Tamper

620852 ⌀ 58mm

Pressino plastica

513744 58-53 mm

Plastic Tamper

513744 58-53 mm

B65 – Per macchine: Dalla Corte, La San Marco, Izzo.

B66 – Per macchine: Astoria Plus 4 You, La Spaziale, Wega Concept.

B68 – Per macchine: Cimbali, Carimali, Gaggia, Reneka.

B70 – Per macchine: Marzocco, Synesso, Slayer, Kees Van der Westen, Nuova Simonelli, Victoria Arduino, Rancilio, Promac, Magister, Astoria, Conti, Elektra, Pavoni, Fracino. E61 e gruppi compatibili come Faema, Vibiemme, Wega, Ascaso, Bezzera, Bfc, Bianchi, Brasilia, D.i.d. L'orchestrale, Ecm, Expobar, Fiorenzato, Grimac, Iberital, La Nuova Era, La Scala, Quality Espresso, Rocket, Royal First, San Remo, SV – Sab, Vfa.

B65 *– Suitable for use with machines: Dalla Corte, La San Marco, Izzo.*

B66 *– Suitable for use with machines: Astoria Plus 4 Yuo, La Spaziale, Wega Concept.*

B68 *– Suitable for use with machines: Cimbali, Carimali, Gaggia, Reneka.*

B70 *– Suitable for use with machines: Marzocco, Synesso, Slayer, Kees Van der Westen, Nuova Simonelli, Victoria Arduino, Rancilio, Promac, Magister, Astoria, Conti, Elektra, Pavoni, Fracino. E61 and compatible groups such as Faema, Vibiemme, Wega, Ascaso, Bezzera, Bfc, Bianchi, Brasilia, D.i.d. L'orchestrale, Ecm, Expobar, Fiorenzato, Grimac, Iberital, La Nuova Era, La Scala, Quality Espresso, Rocket, Royal First, San Remo, SV – Sab, Vfa.*

Filtro B68 1 T H24,5 E

527867

Filter Basket B68 1 T H24,5 E

527867

Filtro B68 2 T H24,5 M
senza canalino

527868

Filter Basket B68 2 T H24,5 M Ridgeless

527868

Filtro B68 2 T H26,5 E
senza canalino

528265

Filter Basket B68 2 T H26,5 E Ridgeless

528265

Filtro B70 1 T H24,5 N

527244

Filter Basket B70 1 T H24,5 N

527244

Filtro B70 2 T H24,5 M

527245

Filter Basket B70 2 T H24,5 M

527245

Filtro B70 2T C H24 E
senza canalino

527246

Filter Basket B70 2T C H24 E Ridgeless

527246

Filtro B70 1 T H26,5 E

527264

Filter Basket B70 1 T H26,5 E

527264

Filtro B70 2 T H26,5 M

527265

Filter Basket B70 2 T H26,5 M

527265

Filtro B70 2T C H26 E
senza canalino

527266

Filter Basket B70 2T C H26 ERidgeless

527266

Filtro B70 2 T H28,5 E
senza canalino

527285

Filter Basket B70 2 T H28,5 E Ridgeless

527285

Filtro B66 1T H25 M

527200

Filter Basket B66 1T H25 M

527200

Filtro B66 2T H26 M

527201

Filter Basket B66 2T H26 M

527201

Filtro Aereopress

527290

Filter Aereopress

527290

Filtro B66 2T H32 M
senza canalino

527202

Filter Basket B66 2T H32 M Ridgeless

527202

Filtro B65 2T H27,5 M

525275

Filter Basket B65 2T H27,5 M

525275

Filtro B65 2T H32 M
senza canalino

525320

Filter Basket B65 2T H32 M Ridgeless

525320

Filtro per Siphon

527291

Filter for Siphon

527291

Doccia RA 200 IM
Rancilio

525352

Shower Head RA 200 IM Rancilio

525352

Doccia CI 200 IM
Cimbali-Astoria

525200

Shower Head CI 200 IM Cimbali-Astoria

525200

Doccia GA 200 IM
Gaggia

525353

Shower Head GA 200 IM Gaggia

525353

Doccia San Marco
Dalla Corte-P4Y

525201

Shower Head San Marco Dalla Corte-P4Y

525201

Doccia SI 200 IM
Nuova Simonelli

525354

Shower Head SI 200 IM Nuova Simonelli

525354

Doccia Rete Fine
Rancilio 35WM

525002

Shower Head Fine Rancilio 35WM

525002

Doccia MA200 IM
Marzocco-Synesso-Slayer

522001

Shower Head MA200 IM Marzocco-Synesso-Slayer

522001

Doccia Rete Fine
S.Marco-Dalla Corte-PY

525003

Shower Head Fine S.Marco-Dalla Corte-PY

525003

Doccia Tipo E61
Competition

525001

Shower Head Tipo E61 Competition

525001

Doccia Rete Fine
Marzocco-Synesso 35WM

525004

Shower Head Fine Marzocco-Synesso 35WM

525004

DOCCE COMPETIZIONE
Competition Shower

Doccia Rete Fine
Cimbali-Astoria 35WM

525005

Shower Head Fine Cimbali-Astoria 35WM

525005

Doccia Rete Fine
Nuova Simonelli 35WM

525007

Shower Head Fine Nuova Simonelli 35WM

525007

Doccia Rete Fine
Tipo E61Competit 35WM

525006

Shower Head Fine Tipo E61Competit 35WM

525006

Doccia Doppia Spaziale
SP 200 IM SPD 200 IM

525008

Double Shower Spaziale SP 200 IM SPD 200 IM

525008

DOCCE COMPETIZIONE NANOTECH
Nanotech Competition Shower

Doccia MA200 NT
Marzocco/Synesso/Slayer

522001/NT

MA200 NT Marzocco/ Synesso/Slayer Shower

522001/NT

Doccia CI200 NT
Cimbali

522003/NT

CI200 NT Cimbali Shower

522003/NT

Doccia SI200 NT
Nuova Simonelli

522002/NT

SI200 NT Nuova Simonelli Shower

522002/NT

Doccia E61200 NT
Faema

522004/NT

E61200 NT Faema Shower

522004/NT

Supporto portafiltro
Supporto portafiltro in acciaio inox con portapressino.

620866 Modello completo

Filter holder support
Complete stainless steel filter holder and tamper support.

620866 *Complete model*

Supporto portafiltro 'Style'
Supporto portafiltro in acciaio inox.

620869 'Style'

'Style' Filter holder support
Stainless steel filter holder support.

620869 *'Style'*

Supporto portafiltro
Supporto portafiltro in acciaio inox.

620857

Filter holder support
Stainless steel filter holder support.

620857

Lattiera con beccuccio
Design elegante.

620230 12oz / 0.35L
620231 20oz / 0.6L
620232 33oz / 0.9L

Tapered Jug with spout.
Heavier stainless steel and elegant design.

620230 12oz / 0.35L
620231 20oz / 0.6L
620232 33oz / 0.9L

Anniversario
Made in Italy

620213 1 tazza/0.15L
620214 3 tazze/0.30L
620215 6 tazze/0.50L
620216 9 tazze/0.75L
620217 12 tazze/1L

Anniversario
Made in Italy

620213 1 cup/0.15L
620214 3 cups/0.30L
620215 6 cups/0.50L
620216 9 cups/0.75L
620217 12 cups/1L

Champion
Made in Italy

620203 2 tazze/0.25L
620240 3 tazze/0.35L
620202 4 tazze/0.50L
620235 6 tazze/0.75L
620236 8 tazze/1L

Champion
Made in Italy
Heavy stainless steel jug with accentuated spout and heavy body.

620203 2 cups/0.25L
620240 3 cups/0.35L
620202 4 cups/0.50L
620235 6 cups/0.75L
620236 8 cups/1L

Easy

620250 3 tazze/0.30L
620251 6 tazze/0.60L
620252 8 tazze/0.80L
620253 10 tazze/1.00L

Easy

620250 3 cups/0.30L
620251 6 cups/0.60L
620252 8 cups/0.80L
620253 10 cups/1.00L

Cremierino

620238 3oz / 0.10L

Small milk Jug

620238 3oz / 0.10L

Mini

620222 1cl Set 4 pz.
620223 3cl Set 2 pz.

Mini

620222 1cl Set 4 pz.
620223 3cl Set 2 pz.

Termometro per lattiere NR

620208

NR Milk Jug Thermometer

620208

Lattiera Black Teflonata
Champion
Made in Italy

620225 4 tazze
620229 6 tazze

Teflon Black Milk Pitcher
Champion
Made in Italy

620225 4 cups
620229 6 cups

Lattiera White Teflonata
Made in Italy

620226 4 tazze

Teflon White Milk Pitcher
Made in Italy

620226 4 cups

Lattiera Antiaderente
Easy

620255 3 tazze cl.30
620256 6 tazze cl.60
620257 8 tazze cl.80
620258 10 tazze cl.100

Coating Milk Pitcher
Easy

620255 3 cups cl.30
620256 6 cups cl.60
620257 8 cups cl.80
620258 10 cups cl.100

Vassoio per pulizia lattiere

701072
Dimensioni 400x220 mm

Milk jugs rinser tray

701072
Dimension 400x220 mm

Kit Accessorio per
vassoiopulizia lattiere

701073

Accessory kit for milk
jugs rinser tray

701073

Spruzzatore per pulizia
lattiere da banco

701070
Dimensioni 174x160x129h mm

Counter top frothing
pitcher rinser

701070
Dimension 174x160x129h mm

Spruzzatore per pulizia
lattiere

701071
Dimensioni 174x160x69h mm

Frothing pitcher rinser

701071
Dimension 174x160x69h mm

Disco spruzzatore

800001

Rinser Disk

800001

Assieme per spruzzatore

800002

Rinser Assembly

800002

Distanziale spuzzatore

800003

Spacer Assembly

800003

Dosatore in metallo con tappo in plastica (12Pz.)

701042

Metal Pourer with Plastic Cork (12 Pcs.)

701042

Spatola

701043 6" / 15cm

Foam Knife

701043 6" / 15cm

Spargicacao 280 gr

620237

Stainless steel cocoa shaker 10 oz

620237

Spargicacao Acciaio inox
Made in Italy
620234

Stainless steel cocoa shaker
Made in Italy

620234

Decoratore Cappuccino

620254

Cappuccino Decorato

620254

Decoratore Cacao

620248

Cacao Decorator

620248

Punteruolo per latte Art

620212
620212/R Rosso
620212/B Blu

Latte Art Pen

620212
620212/R Red
620212/B Blu

Timer digitale con magnete e clip

701059

Digital Timer with magnet and clip

701059

Bottiglietta decorazioni

701060

Decorations squeeze bottle

701060

Cucchiaio Agitatore Acciaio

701041 29cm/ 11"

Stirring Spoon

701041 29cm/ 11"

Cucchiaio assaggio

620218

Taste Spoon

620218

615790

Bilancina ACAIA Lunar

Scale ACAIA Lunar

615791

Bilancia ACAIA Pearl Bianca

White scale ACAIA Lunar

615792

Bilancia ACAIA Pearl Nera

Black scale ACAIA Pearl

615700
Pressino legno/acciaio
Drop Viola Flat 58mm

Flat drop Violet Wooden/ S.Steel tamper 58mm

615720
Pressino legno/acciaio
Drop Viola Convex 58mm

Convex Drop Violet Wood-en/ S.Steel tamper 58mm

615751
Pressino legno/acciaio
Espresso FLAT 58 mm

Rubber/wood tamper Espresso FLAT 58 mm

615752
Pressino legno/acciaio
Espresso Convex 58 mm

Wood/S.Steel tamper Espresso Convex 58 mm

615753
Pressino legnonoce/acciaio
Espresso Flat 58 mm

Nut wooden/S.Steel tamper Espresso Flat 58 mm

615754
Pressino legnonoce/acciaio
Espresso Convex 58 mm

Nut wooden/S.Steel tamper Espresso Convex 58 mm

615701
Pressino lucido XT 58mm

XT 58 mm Tamper mirror finish handle

615702
Pressino opaco XT 58mm

XT 58 mm Tamper cast finish handle

615730
Pressino alluminio/acciaio
Drop Convex 58mm

Convex drop Aluminium/ S.Steel tamper 58mm

615755
Pressino alluminio/acciaio
Espresso Flat 58 mm

Alluminium/S.Steel tamper Espresso Flat 58 mm

615756
Pressino alluminio/acciaio
Espresso Convex 58 mm

Alluminium/S.Steel tamper Espresso Convex 58 mm

615760
Portapressino
U.f.o. gomma

Rubber tamper seat U.f.o.

615763
Lattiera Cafelat 0,7 Lt.

Milk pitcher Cafelat 0,7 Lt.

615764
Lattiera Cafelat 0,4 Lt.

Milk pitcher Cafelat 0,4 Lt.

615759
Supporto a specchio

Mirror stamp stand

615778
Lattiera Cafelat 0,75 Lt.

Milk Pitcher Cafelat 0,75 Lt.

615765
Spazzolino guarnizione gruppo

Group gasket brush

615768
Tappetino

Tamper mat

615774
Ricambi Spazzolini (3)

Spare cleaning brush (3)

615772
Tappetino angolare

Corner tamper mat

615777
Anello ottone Gruppo Leva Gaggia

Brass ring level Group Gaggia

615769
Tappetino Splat Nero

Black splat tamper mat

615770
Tappetino Splat Rosso

Red splat tamper mat

615766
Battifondo Tubbi
Nero h.13 cm

Black knock box
Tubbi h.13 cm

615767
Battifondo Tubbi
Rosso h.13 cm

Red knock box
Tubbi h. 13cm

615773
Battifondo Large Tubbi
Nero h. 15 cm

Black knock box Large
Tubbi h. 15 cm

615775
Barra per battifondo
large tubbi

Bar for knock box
large tubbi

615776
Battifondo Inox
Caffè

Stainless steel Cafè
knock box

615771
Set Panno Microfibra
Barista (4Pz.)

Cleaning cloth
set Barista (4Pcs.)

Per: BFC - Brasilia B61- Conti - ECM - Faema - Futurmat - Isomac - La Pavoni - MYWAY - Quick-mill - Rocket-
San Remo - VBM - Wega

For: BFC - Brasilia B61- Conti - ECM-Faema - Futurmat - Isomac - La Pavoni - MY-WAY - Quickmill - Rocket - San Remo - VBM - Wega

516525
Guarnizione sottocoppa 8 mm rossa

Cup seal red 8 mm

516526
Guarnizione sottocoppa 8,5 mm blu

Cup seal blue 8,5 mm

Per: Rancilio
For: Rancilio

516524
Guarnizione sottocoppa

Cup sea

Per: Nuova Simonelli
For: Nuova Simonelli

516522
Guarnizione sottocoppa 8,3 mm rossa

Cup seal red 8,5 mm

516523
Guarnizione sottocoppa 9 mm blu

Cup seal blue 9 mm

Per: La Marzocco
For: La Marzocco

516527
Guarnizione sottocoppa 8,2 mm blu

Cup seal blue 8,2 mm

615796

Pressino Push Nero

Push Tamper Black

615797

Pressino Push Blu

Push Tamper Blue

615798

Pressino Push Verde

Push Tamper Green

615799

Pressino Push Rosa

Push Tamper Pink

615789

Pressino Push Rosso

Push Tamper Red

620878/B Pressino Blu 58mm *Blue Tamper*
620878/G Pressino Giallo 58mm *Yellow Tamper*
620878/L Pressino Lime 58mm *Lime Tamper*
620878/N Pressino Nero 58mm *Black Tamper*

620879 Pressino Nero 53mm *Black Tamper*

620880/G Spargicacao Giallo Fori Grossi
Yellow Coarse Mesh Cocoa Shaker
620880/L Spargicacao Lime Fori Grossi
Lime Coarse Mesh Cocoa Shaker
620880/N Spargicacao Nero Fori Grossi
Black Coarse Mesh Cocoa Shaker
620880/R Spargicacao Rosso Fori Grossi
Red Coarse Mesh Cocoa Shaker

620881/B Spargicacao Blu Fori Fini
Blue Fine Mesh Cocoa Shaker
620881/G Spargicacao Giallo Fori Fini
Yellow Fine Mesh Cocoa Shaker
620881/L Spargicacao Lime Fori Fini
Lime Fine Mesh Cocoa Shaker
620881/N Spargicacao Nero Fori Fini
Black Fine Mesh Cocoa Shaker
620881/R Spargicacao Rosso Fori Fini
Red Fine Mesh Cocoa Shaker
620881/S Spargicacao Silver Fori Fini
Silver Fine Mesh Cocoa Shaker

620882/N Spazzolino Lungo Nero
Black Long Group Brush

620883 Tappetino per Pressare
Tamper Mat

620885 Tappetino Professional per pressare
Professional Tamper Mat

620886 "The Big Barista" Battifondo
"The Big Barista" knock box

620889 Barra battifondo "The Big Barista"
Knock Box Bar "The Big Barista"

620876/L Battifondo Lime H/175mm
Lime Knock Tube H/175mm
620876/N Battifondo Nero H/175mm
Black Knock Tube H/175mm
620876/R Battifondo Rosso H/175mm
Red Knock Tube H/175mm
620876/S Battifondo Silver H/175mm
Silver *Knock Tube H/175mm*

620877/B Battifondo Blu H/110mm
Blue Knock Tube H/110mm
620877/N Battifondo Nero H/110mm
Black Knock Tube H/110mm
620877/R Battifondo Rosso H/110mm
Red Knock Tube H/110mm
620877/S Battifondo Silver H/110mm
Silver *Knock Tube H/110mm*

620888 Barra battifondo
Knock Box Bar

620897 Professional Kit Barista Nero
Professional Kit Barista Black
620897/G Professional Kit Barista Grigio
Professional Kit Barista Dark grey
620897/R Professional Kit Barista Rosso
Professional Kit Barista Red

620845 Latte ID Clip "SOY" (2pz.)
Milk ID Clip "SOY" (2pcs.)
620846 Latte ID Clip "ALMID" (2pz.)
Milk ID Clip "ALMID" (2pcs.)
620847 Latte ID Clip "L.FREE" (2pz.)
Milk ID Clip "L.FREE" (2pcs.)
620848 Latte ID Clip "LIGHT" (2pz.)
Milk ID Clip "LIGHT" (2pcs.)
620849 Latte ID Clip "FULL" (2pz.)
Milk ID Clip "FULL" (2pcs)

615899

Cono singolo super fine Inox EDO
Stainless steel single cone super fine EDO

615900

Cono singolo fine Inox EDO
Stainless steel single cone fine EDO

615901

Cono doppio Inox EDO

Double stainless steel cone EDO

620265

Tappetino angolare in gomma

Angular rubber tamper mat

620276

Bilancia Digitale con timer 13x19 cm

Digital scale with timer 13x19 cm

620249

Battifondo incassato senza fondo EDO
Dimensioni 150,5x137x108,5 mm

Knock box built in bottomless EDO
Dimensions 150,5x137x108,5 mm

620266

Battifondo EDO con Fondo
Dimensioni 150,5x137x110 mm

Knock box EDO with bottom
Dimensions 150,5x137x110 mm

620266/N

Battifondo EDO nero opaco con Fondo
Dimensioni 150,5x137x110 mm

Matt Black knock box EDO with bottom
Dimensions 150,5x137x110 mm

622010

Barra gommata battifondo EDO ø 35x130 mm

Knock box Bar EDO ø 35x130 m

620277

Supporto pressa Caffè nero EDO

Coffee tamper support black EDO

620896

Panno barista EDO 40x30 cm C/MOSCHETTONE

Barista towel EDO 40x30 cm WITH CLIP

620843

Panno barista EDO 40x30 cm MARRONE

Barista towel EDO pack 40x30 cm BROWN

620898

Panno barista EDO 40x30 cm AZZURRO

Barista towel EDO pack 40x30 cm LIGHT BLUE

620899

Panno barista EDO 40x30 cm GRIGIO

Barista towel EDO pack 40x30 cm GREY

620915

Grembiule EDO 93x67 cm

Apron EDO 93x67 cm

620264

Lattiera latte Pro 600 ml

Milk jug latte Pro 600 ml

620267
Lattiera 350 ml BABY PINK
Milk Pitcher 350 ml BABY PINK

620271
Lattiera 600 ml BABY PINK
Milk Pitcher 600 ml BABY PINK

620268
Lattiera 350 ml GLASS GREEN
Milk Pitcher 350 ml GLASS GREEN

620272
Lattiera 600 ml GLASS GREEN
Milk Pitcher 600 ml GLASS GREEN

620269
Lattiera 350 ml RED
Milk Pitcher 350 ml RED

620273
Lattiera 600 ml RED
Milk Pitcher 600 ml RED

620270
Lattiera 350 ml TIFFANY BLUE
Milk Pitcher 350 ml TIFFANY BLUE

620274
Lattiera 600 ml TIFFANY BLUE
Milk Pitcher 600 ml TIFFANY BLUE

620275
Punteruolo per latte Art

Latte Art tool

620293

Set Caffè EDO Linea UZU Blu

Coffee Set EDO UZU Line Blue

620294

Set Caffè EDO Linea UZU Rosa

Coffee Set EDO UZU Line Rose

620295

Set Caffè EDO Linea UZU Azzurra

Coffee Set EDO UZU Line Light Blue

620325

Set Caffè EDO Linea UZU Verde

Coffee Set EDO UZU Line Green

620287

Accessorio distrib. caffé "TWISTER" nero

Coffee distrib. accessory "TWISTER" black

620288

Accessorio distrib. caffé "TWISTER" rosso

Coffee distrib. accessory "TWISTER" red

620289

Accessorio distrib. caffé "TWISTER" grigio

Coffee distrib. accessory "TWISTER" grey

620290

Accessorio distrib. caffé "TWISTER" verde

Coffee distrib. accessory "TWISTER" green

620291

Accessorio distrib. caffé "TWISTER" rosa

Coffee distrib. accessory "TWISTER" pink

620278

Foam Locus 0,4 L

Foam Locus 0,4 L

620279

Foam Locus 0,6 L

Foam Locus 0,6 L

620280

Foam Locus 1,0 L

Foam Locus 1,0 L

620281

Foam Locus Essential set

Foam Locus Essential set

620282

Foam Locus Essential Temp. Set.

Foam Locus Essential Temp. Set.

620283

Foam Locus Stickers

Foam Locus Stickers

617938/A
Manopola acero portafiltro M10
Handle maple filterholder M10

700317/A
Manopola acero portafiltro M12
Filter holder handle maple wood M12

617938/N
Manopola noce canaletto portafilto M10
Handle walnut filterholder M10

700317/N
Manopola noce canaletto portafilto M12
Filter holder knob walnut M12

617938/U
Manopola ulivo portafiltro M10
Handle olive filterholder M10

700317/U
Manopola ulivo portafiltro M12
Filter holder handle olive wood M12

632316/A
Manopola portafiltro NR M10 acero
Maple filterholder handle NR M10

632317/A
Manopola portafiltro NR M12 acero
Maple filterholder handle NR M12

632316/N
Manopola portafiltro NR M10 noce
Walnut filterholder handle NR M10

632317/N
Manopola portafiltro NR M12 noce
Walnut filterholder handle NR M12

632316/U
Manopola portafiltro NR M10 ulivo
Olive filterholder handle NR M10

632317/U
Manopola portafiltro NR M12 ulivo
Olive filterholder handle NR M12

620284

Manopola Vapore Noce Canaletto

Nut Wood Steam Knob Canaletto

620285

Tappo Cromato per manopola vapore Noce

Chromed plug for nut wood steam Knob

620286

Manopola acqua Noce Canaleto

Nut wood water Knob Canaletto

621000

Coffee Pot & Dripper Set 400 ml

621004

Waterdrip Coffee Server 440 ml

621001

Coffee Pot & Dripper Set 600 ml

621005

Waterdrip Coffee Server (UHURU) 440 ml

621002

Coffee Pot & Dripper Set (Barafu) 600 ml

621006

Coffee Press 480 ml

621003

Coffee Carafe & Dripper Set 600 ml

701080
Spazzolino Multiuso

Coffeetool LP

701085
Scavolino Small

Steam Wand Cleaning Brush Small

701081
Ricambio Spazzolino (3 pezzi)

Replacement Bristle (3 pieces)

701082
Chiave Caffeina

Caffeine Wrench

701083
Spazzolino Macinino

Grindminder

701084
Scavolino Large

Steam Wand Cleaning Brush Large

615795
Sistema Pulizia Pro-Fondi ø58- ø53
Cleaning System Pro-Fondi ø58 - ø53

- Ottimizza la pulizia del filtro migliorando il risultato in tazza (da test eseguiti in laboratori di importanti torrefazioni)
- Evita di sporcare la pedana
- Evita il rumore della battuta migliorando il comfort acustico del vostro locale
- Riduce la sostituzione dei filtri e l'abrasione delle guarnizioni
- Elimina gli interventi di riparazioni e sostituzioni di cassetti battifondi
- Più veloce della classica battuta
- Evita traumi al tunnel carpale e avambraccio dovuti alla battuta
- Raccoglie e smaltisce i fondi in modo igienico
- Di facile e veloce pulizia non necessita di manutenzioni particolari
- Evita l'ingombro del vecchio cassetto verso l'operatore
- Raccoglie grandi quantità di fondi nello stesso sacchetto
- Evita la formazione di insetti causata dai fondi dispersi nel sotto pedana

- *Optimise cleaning of the filter thus improving results in the cup (from tests performed in the laboratories of leading coffee roasters)*
- *Avoids dirtying the base*
- *Avoids the noise from combing thus improving the acoustic comfort of your premises*
- *Avoids replacement of the filters and abrasion of the units*
- *Avoids repairs and replacements of coffee grounds drawers*
- *Quicker than traditional combing*
- *Avoids discomfort to the carpal tunnel*
- *Collects and disposes of the coffee grounds hygienically*
- *It does not require special cleaning or maintenance*
- *Avoids the old bulky drawer that hinders the operator*
- *Collects large quantities of grounds in the same bag*
- *Avoids the presence of insects caused by the grounds dispersed under the base*

615920
Manopola Pressino
Alluminio Nera Lucida

Tamper Handle Allu.
Black Shiny

615921
Manopola Pressino
Alluminio Rossa Opaca

Tamper Handle Allu. Red
Matte

615922
Manopola Pressino
Alluminio Blu Cobalto
Opaca

Tamper Handle Allu. Blue
Cobalt Matt

615923
Manopola Pressino
in Vernice Bianca

Tamper Handle Powder
Coated White

615924
Manopola Pressino
in Vernice Tiffany

Tamper Handle Powder
Tiffany

615925
Manopola Pressino
Legno Rosso Jarrah

Tamper Handle Wood
Red Jarrah

615926
Manopola Pressino Legno
Quercia Australiana

Tamper Handle Australian
Oak Timber

615927
Manopola Pressino
Legno a Scacchi

Tamper Handle Timber
Checkerboard Design

615928
Manopola Pressino
Legno Ulivo

Tamper Handle in Olive
Timber

615929
Base Pressino ø 58 Flat

Tamper Base ø 58 Flat

615930
Base Pressino ø 58,30 Flat per E61

Tamper Base ø 58 Flat for E61

615931
Base Pressino "Big Step"

Tamper Base "Big Step"

615932
Base Pressino ø 53 Flat

Tamper Base ø 53 Flat

615933
Kit 6 Basi per Pressino

6 Bases Kit for Tamper

615934
Manopola Portafiltro Legno Ulivo

Filterholder Handle Olive

615935
Manopola Portafiltro Legno Jarrah

Filterholder Handle Wood Jarrah

615936
Manopola Portafiltro Legno a Scacchi

Filterholder Handle Timber Checker

615937
Manopola Portafiltro Legno Quercia Australiana

Filterholder Handle Australian Oak

615938
Manopola Portafiltro Legno Zebrato

Filterholder Handle Timber Zebrato

615939
Accessorio distribuz. caffe "The Chisel"

Redistribution tool "The Chisel"

200317
Tazzina Caffè
Milano Bianca

Coffee Cup
Milano White

200319
Tazzina Caffè
Milano Rossa

Coffee Cup
Milano Red

200329
Tazzina Caffè
Genova Bianca

Coffee Cup
Genova White

200325
Tazzina Caffè
Genova Rossa

Coffee Cup
Genova Red

200306
Tazzina Caffè
Ischia bianca

Coffee Cup
Ischia White

200320
Piattino Caffè
MI/Ischia/GE/AO Rosso

Coffee Saucer
MI/Ischia/GE/AO Red

200335
Piattino Caffè
MI/Ischia/GE/AO Bianca

Coffee Saucer
MI/Ischia/GE/AO White

200302
Tazzina Caffè
Milano Nera

Coffee Cup
Milano Black

200303
Piattino Caffè
MI/Ischia/GE/AO Nero

Coffee Saucer
MI/Ischia/GE/AO Black

200336
Tazza Cappuccino
Milano Bianca

Cappuccino Cup
Milano White

200313
Tazzina Cappuccino
Milano Rossa

Cappuccino Saucer
Milano Red

200308
Tazza Cappuccino
Genova Bianca

Cappuccino Cup
Genova White

200312
Tazza Cappuccino
Genova Rossa

Cappuccino Cup
Genova Red

200318
Piattino Cappuccino
MI/Ischia/GE/AO Bianca

Cappuccino Saucer
MI/Ischia/GE/AO White

200310
Tazza Cappuccino
Aosta Rossa

Cappuccino Cup
Aosta Red

200315
Tazza Cappuccino
Genova Nera

Cappuccino Cup
Genova Black

200314
Piattino Cappuccino
MI/Ischia/GE/AO Rosso

Cappuccino Saucer
MI/Ischia/GE/AO Red

200300
Tazza Cappuccino
Milano Nera

Cappuccino Cup
Milano Black

200301
Piattino Cappuccino
MI/Ischia/GE/AO Nero

Cappuccino Saucer
MI/Ischia/GE/AO Black

200337
Tazza Colazione
Milano Bianca

Breakfast Cup
Milano White

200333
Tazza Colazione
Milano Rossa

Breakfast Cup
Milano Red

200338
Piattino Colazione
MI/Ischia/GE/AO Bianca

Breakfast Saucer
MI/Ischia/GE/AO White

200334
Piattino Colazione
MI/Ischia/GE/AO Rosso

Breakfast Saucer
MI/Ischia/GE/AO Red

700045
Zuccheriera Inox

Stainless Steel
Sugar Box

516264

Misurino inox 7gr

Stainless steel coffee spoon 7 gr

702009

Bilancia digitale
'Tangent 102'
Max 100g 0-100g /d=0.1g

Digital scale 'Tangent 102'
Max 100g 0-100g / d=0.1g

516264/P

Misurino plastica 7gr

Plastic coffee spoon 7 gr

620245

Termometro infrarossi
-50 °C+380 °C 0,8"

Infrared thermometer
-50 °C+380 °C 0,8"

701011

Bicchierino pirex con dosi

Pirex lined shot glass

620244

Termometro digitale
-50 °C+300 °

Digital thermometer
-50 °C+300 °

702008

Bilancia Digitale KOF-E 1000T
Max 1000g 0-1000g / d=0.1g

Digital Scale KOF-E 1000T
Max 1000g 0-1000g / d=0.1g

615793

Rifrattometro Digitale

CARATTERISTICHE
1. In grado di misurare e gestire anche le minime differenze di concentrazione: mostra fino al 2 ° decimale
2. La misurazione stabile e affidabile anche da caffè caldo appena fatto: rileva automaticamente la stabilità della temperatura
3. Design igienico: può essere lavato completamente sotto l'acqua corrente

SPECIFICHE TECNICHE
• Modello: PAL-caffè (BX / TDS)
• Scala: Temperatura Brix TDS
• Gamma di misura: Brix: da 0.00 a 25.00%; TDS: 0,00-22,00%; Temperatura: 10.0 a 100 ° C
• Risoluzione: Brix: 0,01%; TDS: 0,01%; Temperatura: 0.1 °C
• Precisione di misura: Brix: ± 0,10%; TDS: ± 0,15%; Temperatura: ± 1 °C
• gamma di compensazione di temperatura: da 10 a 100 °C
• Temperatura ambiente: da 10 a 40 °C
• Volume del campione: Almeno 0,3 ml
• Tempo di misura: Circa. 5 secondi - 120 secondi di misurazione continua
• Alimentazione: 2 batterie alcaline AAA
• Durata della batteria: misura fino a circa. 11.000 volte (se si utilizzano batterie alcaline)
• Classe di protezione internazionale: IP65 per polvere e protezione contro i getti d'acqua
• Dimensioni e peso: (Solo unità principale) 55 (W) x 31 (D) x 109 (H) mm, 100g

Digital Refractometer

CHARACTERISTICS
1. Able to measure and manage even the slightest differences in concentration: displays up to the 2nd decimal
2. Stable and reliable measurements even from freshly brewed, hot coffee: automatically detects temperature stability
3. Hygenic design: can be fully washed under running water

SPECIFICATIONS
• Model: PAL-COFFEE (BX/TDS)
• Scale: Brix TDS Temperature
• Measurement Range: Brix : 0.00 to 25.00%; TDS : 0.00 to 22.00%; Temperature : 10.0 to 100°C
• Resolution: Brix : 0.01%; TDS : 0.01%; Temperature : 0.1°C
• Measurement Accuracy: Brix : ±0.10%; TDS : ±0.15%; Temperature :±1°C
• Temperature compensation range: 10 to 100°C
• Ambient Temperature: 10 to 40°C
• Sample Volume: At least 0.3ml
• Measurement Time: Approx. 5 seconds - 120 seconds of continuous measurement
• Power Supply: Two (2) AAA alkaline batteries
• Battery Life: Approx. 11,000 times measurement (when alkaline batteries are used)
• International Protection Class: IP65 Dust-tight and Protected against water jets
• Dimensions & Weight: 55(W) x 31(D) x 109(H)mm, 100g (main unit only)

701038
701038/N nero / *black*

Spazzolino 'Smart'

'Smart' brush

701009

Spazzola acciaio

Stainless steel brush

701045

Spazzolino grande

Big brush

701013

Pennello pulizia macinacaffè

Grinder cleaning brush

701048

Pennello L=50mm

Brush L=50mm

701040

Scovolino pulizia beccuccio

Spout brush

521901 standard
700487 San Marco
703535 Spaziale

Filtro cieco per Clean Express

Blind filter basket for Clean Express

700613

Disco gomma Clean Express

Rubber disc for Clean Express

701007

Punteruolo 80x7 mm

Awl 80x7 mm

701008

Cacciavite nano a taglio

Miniature screwdriver

Portafiltro con manometro e entrata termometro. Disegnato per controllare pressione e temperatura nel gruppo e permette di settare la dosatura senza usare il caffé.

Filter holder with manometer and thermometer connection
Designed to check the pressure and temperature in your group head and setting of the doses without using coffe.

620913 Aurora-Brugnetti
Brasilia gruppo B61
Conti
Faema (vecchi modelli / *old models*)
Futurmat-Ariete
620913/A Astoria
Bezzera
Brasilia
620913/AP Astoria 53 mm +4U
620913/C Cimbali
620913/CA Carimali
620913/DC Dalla Corte
620913/G Gaggia
620913/NS Nuova Simonelli
620913/R Rancilio
620913/SM San Marco
620913/SP Spaziale
620913/V BFC
ECM
Elektra
Faema (nuovi modelli / *new models*)
Isomac
La Marzocco
La Scala
Rocket
San remo
SV
Vibiemme
Wega

Termometro digitale
-50 °C+300 °C
Adatto al nostro portafiltro con manometro.

Digital thermometer
-50 °C+300 °C
Suitable for connection to our filter holder with manometer.

620204

Portafiltro con manometro.

Filter holder with manometer.

700113 Aurora-Brugnetti
Conti-Faema (vecchi modelli /*old models*)
Futurmat-Ariete
700113/A Astoria-Bezzera
Brasilia
700113/AP Astoria 53 mm +4U
700113/C Cimbali
700113/CA Carimali
700113/G Gaggia
700113/NS Nuova Simonelli
700113/P Pavoni
700113/SM San Marco
700113/SP Spaziale
700113/V Faema (nuovi modelli / *new models*)
Elektra
La Marzocco-La Scala
Rancilio-San Remo
SV-Vibiemme-Wega

700148/Z

620437

Base in acciaio inox con barra battifondi
Dimensioni 250x375x85 mm

Heavy stainless steel base drawer with knock bar
Size 250x375x85 mm

622004

Barra gommata battifondi
Dimensioni ø30x240 mm

Knock box bar
Size ø30x240 mm

620436

Cassetto in acciaio inox con barra battifondi
Dimensioni cassetto 350x405x132 mm
Foratura 350x130 mm

Stainless steel drawer with knock bar
Drawer size 350x405x132 mm
Gap size 350x130 mm

620259

Cuscinetto completo per cassetto in acciaio inox

Complete bearing for stainless steel drawer

622005 ø35x300 mm
622006 ø35x325 mm
622007 ø35x350 mm

Barra gommata battifondi

Knock box bar

620246

Contenitore battifondi acciaio 4"
Dimensioni 153x140x105h mm

Stainless steel knock box 4"
Size 153x140x105h mm

620247

Contenitore battifondi acciaio 6"
Dimensioni 153x140x150h mm

Stainless steel knock box 6"
Size 153x140x150h mm

620210

Cassetto battifondi basculante fondo chiuso
Dimensioni 345 x 277 mm

Knock box closed bottom
Dimension 345 x 277 mm

620211

Cassetto battifondi basculante fondo aperto
Dimensioni 345 x 277 mm

Knock box open bottom
Dimension 345 x 277 mm

620241

Bastone battifondi
Dimensioni ø 40 x 320 mm

Knock box bar
Size ø 40 x 320 mm

300214/N Conti

Portafiltro senza fondo 21gr
Naked filter holder 21gr

526757

Filtro
Filter

460016/N Aurora
Elektra
Faema
Futurmat- Ariete
Marzocco
Vibiemme
Wega
573525/N Faema
(old)

Portafiltro senza fondo 21gr
Naked filter holder 21gr

526757

Filtro
Filter

573525/LMN Wega

Portafiltro senza fondo 21gr
Naked filter holder 21gr

526757

Filtro
Filter

700249/N Cimbali

Portafiltro senza fondo 21gr
Naked filter holder 21gr

526757

Filtro
Filter

700399/N San Marco

Portafiltro senza fondo 21gr
Naked filter holder 21gr

526405/A

Filtro
Filter

700565/N Gaggia

Portafiltro senza fondo 21gr
Naked filter holder 21gr

700256

Filtro
Filter

700721/N Astoria
Brasilia
Bezzera

Portafiltro senza fondo 21gr
Naked filter holder 21gr

526757

Filtro
Filter

700804/N Pavoni

Portafiltro senza fondo 21gr
Naked filter holder 21gr

526757

Filtro
Filter

700299/N Rancilio

Portafiltro senza fondo 21gr
Naked filter holder 21gr

526757

Filtro
Filter

703815/N Carimali

Portafiltro senza fondo 21gr
Naked filter holder 21gr

526202

Filtro
Filter

703200/N Spaziale
700721/AP Astoria+4U

Portafiltro senza fondo 14gr
Naked filter holder 14gr

526207

Filtro
Filter

705107 Dalla Corte

Portafiltro senza fondo 21gr
Naked filter holder 21gr

526405/A

Filtro
Filter

703414/N Nuova Simonelli

Portafiltro senza fondo 21gr
Naked filter holder 21gr

526757

Filtro
Filter

PORTAFILTRO CIALDE E PORTAFILTRO TEFLONATO

Filter Holder for Pods and Teflon Coated Filter Holder

620190	Aurora - Brugnetti
	Brasilia gruppo B61
	Conti - Faema (vecchi modelli)
	Futurmat - Ariete
620190/A	Astoria - Bezzera
	Brasilia - Gruppo BE
620190/AP	Astoria 53 mm
620190/C	Cimbali
620190/CA	Carimali
620190/DC	Dalla Corte
620190/G	Gaggia
620190/LM	La Marzocco
620190/NS	Nuova Simonelli
620190/P	Pavoni
620190/R	Reneka
620190/SM	San Marco
620190/SP	Spaziale
620190/V	Faema (nuovi modelli)
	Rancilio - La Scala
	San Remo - SV
	Vibiemme - Wega

620901	Aurora-Brugnetti
	Faema (vecchi modelli)
	Futurmat
620902	Astoria
	Bezzera
	Brasilia
620903	Cimbali
620904	Carimali
620905	Gaggia
620906	Nuova Simonelli
620907	Pavoni
620908	Spaziale
620909	San Marco
620910	Rancilio
	Rocket
	Elektra
620911	Faema (nuovi modelli)
	BFC
	La Scala
	San Remo
	Wega
	Vibiemme
620912	Conti

Portafiltro per capsule
Capsule filter holder

620922	Astoria- Brasilia - Bezzera
620924	Cimbali
620925	La Spaziale
620926	La Pavoni
620927	Faema - Casadio
620928	Gaggia - Saeco
620929	San Marco
620929/L	San Marco a leva
620930	Nuova Simonelli
620931	Dalla Corte
620932	Carimali
620935	Astoria 53mm

Portafiltro per capsule bidose
Capsule filter holder bidose

620933	BFC - Brasilia - Brugnetti - Futurmat - Marzocco - La Scala San Remo - SV - Vibiemme - Wega
620934	Astoria - Brasilia - Bezzera
620936	Cimbali

Portafiltro per capsule con valvola
Capsule filter holder with valve

620922/V	Astoria - Brasilia - Bezzera
620924/V	Cimbali
620925/V	La Spaziale
620927/V	Faema
620928/V	Gaggia - Saeco
620929/V	San Marco
620929/LV	San Marco a Leva
620930/V	Nuova Simonelli
620931/V	Dalla Corte
620932/V	Carimali

Portafiltro per capsule Segrafedo
Segafredo Capsule filter holder

620921/S	Brugnetti - Cime - La Marzocco - La Scale - Sanremo - SV Italia - Vibiemme - Wega
620922/S	Astoria-Brasilia-Bezzera
620923/S	Elektra-Rancilio-Rocket
620924/S	Cimbali
620925/S	La Spaziale
620926/S	La Pavoni
620927/S	Brasilia B61-Faema-Futurmat
620930/S	Nuova Simonelli
620935/S	Astoria 53mm P4U

Portafiltro per capsule new

Capsule filter holder new

Per: BFC - Brugnetti - La Scala - Rancilio - San Remo - SV ITALIA - Vibiemme - Wega

620947 Capsula singola
620948 Capsula singola con beccuccio singolo
620946 Capsula doppia con beccuccio singolo
620945 Capsula doppia con beccuccio doppio

Per: Faema

620949 Capsula singola

Per: Marzocco - Synesso - Slayer

620942 Capsula singola
620943 Capsula doppia

Per: La Spaziale

620954 Capsula singola

Per: Cimbali

620955 Capsula singola

Per: BFC - Brugnetti - La Scala - Rancilio - an Remo - SV ITALIA - Vibiemme Wega

620947/V Capsula singola con valvola
620948/V Capsula singola con valvola beccuccio singolo
620946/V Capsula doppia con valvola beccuccio singolo
620945/V Capsula doppia con valvola beccuccio doppio

Per: Faema

620949/V Capsula singola con valvola

Per: Marzocco - Synesso - Slayer

620942/V Capsula singola con valvola
620943/V Capsula doppia con valvola

Per: La Spaziale

620954/V Capsula singola con valvola

Per: Cimbali

620955/V Capsula singola con valvola

Il kit contiene tutti gli strumenti necessari al venditore di caffè.

The kit has all the tools a coffee salesman requires.

701075 Kit Professionale Coffee Test	Aurora Brugnetti Faema Rancilio
701075/A Kit Professionale Coffee Test	Astoria Bezzera Brasilia
701075/C Kit Professionale Coffee Test	Cimbali
701075/CA Kit Professionale Coffee Test	Carimali
701075/G Kit Professionale Coffee Test	Gaggia
701075/NS Kit Professionale Coffee Test	Nuova Simonelli
701075/P Kit Professionale Coffee Test	Pavoni
701075/SM Kit Professionale Coffee Test	San Marco
701075/SP Kit Professionale Coffee Test	Spaziale
701075/V Kit Professionale Coffee Test	BFC Brasilia CS Fiorenzato Faema Futurmat La Marzocco La Scala Rancilio Vibiemme Wega

I codici sono determinati dal portafiltro con manometro adatto al modello di macchina da caffè
Il kit contiene: un bicchierino graduato in pirex, un termometro, una bilancina digitale, un portafiltro con manometro, entrata termometro e dosatura, un pressino in plastica, un misurino in plastica, uno spazzolino 'Smart', un filtro cieco, un barattolo clean express in pastiglie e un kit prova durezza.

Codes are related to the suitable filter holder with manometer for your espresso machine.

The kit includes: a pirex shot glass, a thermometer, a digital scale, a filter holder with manometer, thermometer connection and dose, a plastic tamper, a plastic spoon, a 'Smart' brush, a blind filter, a tub of Clean Express tablets and a water hardness test kit.

Coffee Bean Roasting System

702507

• Mixing	Off-axis rotation system (radiant heat)
• Heating	Convection
• Cooling	Normal temperature forced blow (approx 10 min)
• Temperature range	190 - 250 °C
• Temperature control	0 - 250 °C by an electronic thermostat
• Heater capacity	1000W
• Power source	AC 100V-110V-120V-220V-230V-240V- 50/60 Hz
• Consumption current	1000W
• Chamber materials	Heat resistant glass tube (pyrex)
• Chamber capacity	300g (max 350g) - 8.8oz (max 10oz)
• Noise	65 dB
• Dimension	383 x 243 x 229 mm (15 x 9.6 x 9 inches)
• Net weight	5.5kg (12lb)
• Colour	Black

• Spare part

502000 Filter Assembly

Patented 3D rotation
Gene Café's unique mixing rotation system features off-axis roatation to ensure even distribution of the beans and better heat circulation during the roasting process.

Removable bisected roasting chamber
The divided roasting chamber efficiently distributes the beans as they roast. Ensuring even heat flow and efficient cooling. Gene Café roasters come with a chamber stand to safely and securly hold the chamber upright for convinient filling and cleaning.

High efficiency chaff removal
Perforations in the roasting chamber divider panel help to gently remove chaff, a thin membrane surrounding the bean, and whisk it away into a spacious collection chamber that is easy to detach and empty.

Fast response heat control
A simple dial provides precise control over the nickel chrome coil heater for accurate roasting temperature while an LED display shows both the set and actual temperatures.

Dynamic roasting and cooling
A second control knob makes it a snap to change the roasting cycle time on the fly. Manually switching from roasting to cooling is as easy as pressing a button. Digital displays show roasting time and cooling status.

Automatic cooling function
The Gene Café automatically switches from roasting to cooling, and temperature sensors control the cooling process. An audible tone lets you know when the cooling cycle has completed.

Cybernetic sensor safety system
In the event that the Gene café's roasting temperature exceeds a preset upper limit, the heater will automatically shut off.

Full range roasting
Gene Café can roast beans to any of the eight roast levels commonly referred to by coffee roasting professionals: Light, Cinnamon, Medium, High, City, Full City, French and Italian.

At home on the kitchen counter
Sleek Eurostyle design and a small footprint make the Gene Caffé an attractive addition to any kitchen or showroom.

Clear roasting chamber and safety cover
Being able to see the beans during roasting makes it easy to tell when you want to make time or temperature changes on the fly. The hinged safety cover helps to isolate the roasting chamber.

Coffee Queen Original

702515

Macchina per caffè a filtro con sistema di riempimento manuale con 2 piastre caldi e 2 caraffe incluse.

The brewer has manual water filling system con 2 hotplates and 2 serving decanters included.

Capacità	circa 12 tazze in 6 minuti circa 15 Lt/h
Alimentazione	230V - 2390W
Connessione Acqua	Acqua Fredda 1/2" R
Dimensioni	205 x 360 x 430 mm
Capacity	*Approx 12 cups in 6 minutes* *Approx 15 Lt/h*
Power Supply	*230V - 2390W*
Water Connection	*Cold Water 1/2" R*
Dimension	*205 x 360 x 430 mm*

702516 Confezione Filtri Carta - 1000 pezzi - Ø110 mm

Paper Filters Pack - 1000 pieces - Ø110 mm

702517 Caraffa in Vetro 1,8 Lt

Glass Decanter 1.8 Lt

702014 Macinadosatore MXK Automatico
Motore 230V - 50Hz - 350W - 350 rpm
Macine Coniche Ø 63 mm
Produttività 6 kg/h - **Capacità campana** 1,4 kg
Peso 15 kg - **Dimensioni** 230 x 370 x h600 mm
Dispositivo contadosi

702014 MXK Automatic Coffee Grinder
Motor *230V - 50Hz - 350W - 350 rpm*
Blades *Conical Ø 63 mm*
Productivity *6 kg/h* - ***Hopper Capacity*** *1,4 kg*
Weight *15 kg* - ***Dimensions*** *230 x 370 x h600 mm*
Dosing counter

702680 Macinadosatore MXA Automatico Micrometrico
Motore 230V/50Hz 340W 1400 rpm
Macine Piana ø 65 mm
Produttività 6 kg/h - **Capacità campana** 1,4 kg
Peso 13 kg - **Dimensioni** 230 x 370 x h600 mm
Regolazione micrometrica
Dispositivo contadosi

702680 MXA Automatic Coffee Grinder Stepless Adjustments System
Motor *230V/50Hz 340W 1400 rpm*
Blades *Flat ø 65 mm*
Productivity *6 kg/h* - ***Hopper Capacity*** *1,4 kg*
Weight *13 kg* - ***Dimensions*** *230 x 370 x h600 mm*
Stepless adjustment system
Dosing counter

702681 Macinacaffè MXD "On Demand" Micrometrico
Motore 230V/50Hz 340W 1400 rpm
Macine Piana ø 75 mm
Produttività 10 kg/h - **Capacità campana** 1,4 kg
Peso 11 kg - **Dimensioni** 230 x 370 x h600 mm
Regolazione micrometrica - Tre dosi programmabili
Dosatura manuale - Dispositivo contadosi

702681 MXD Coffee Grinder "On Demand" Stepless Adjustment System
Motor *230V/50Hz 340W 1400 rpm*
Blades *Flat ø 75 mm*
Productivity *10 kg/h* - ***Hopper Capacity*** *1,4 Kg*
Weight *11 kg* - ***Dimensions*** *230 x 370 x h600 mm*
Stepless adjustment system - Three doses programmable
Manual dosing - Dosing counter

702682 Macinadosatore M5A Automatico Micrometrico
Motore 230V/50Hz 250W 1400 rpm
Macine Piane Ø 58 mm
Produttività 3 kg/h - **Capacità campana** 0,6 kg
Peso 9 kg - **Dimensioni** 190 x 310 x h470 mm
Regolazione micrometrica
Dispositivo contadosi

702682 M5D Automatic Coffee Grinder Stepless Adjustments System
Motor *230V/50Hz 250W 1400 rpm*
Blades *Flat Ø 58 mm*
Productivity *3 kg/h* - ***Hopper Capacity*** *0,6 kg*
Weight *9 kg* - ***Dimensions*** *190 x 310 x h470 mm*
Stepless adjustment system
Dosing counter

702683 Macinacaffè M5D "On Demand" Micrometrico
Motore 230V/50Hz 250W 1400 rpm
Macine Piana ø 58 mm
Produttività 7 kg/h - **Capacità campana** 0,6 kg
Peso 8,5 kg - **Dimensioni** 190 x 310 x h470 mm
Regolazione micrometrica - Tre dosi programmabili
Dosatura manuale - Dispositivo contadosi

702683 M5D Coffee Grinder "On Demand" Stepless Adjustments System
Motor *230V/50Hz 250W 1400 rpm*
Blades *Flat ø 58 mm*
Productivity *7 kg/h* - ***Hopper Capacity*** *0,6 kg*
Weight *8,5 kg* - ***Dimensions*** *190 x 310 x h470 mm*
Stepless adjustment system - Three doses programmable
Manual dosing - Dosing counter

702684 Macinadosatore M7A Automatico Micrometrico
Motore 230V/50Hz 800W 1400 rpm
Macine Piana ø 75 mm
Produttività 11 kg/h - **Capacità campana** 1,4 kg
Peso 15,5 kg - **Dimensioni** 250 x 360 x h635 mm
Regolazione micrometrica
Dispositivo contadosi

702684 M7A Automatic Coffee Grinder Stepless Adjustment System
Motor *230V/50Hz 800W 1400 rpm*
Blades *Flat ø 75 mm*
Productivity *11 kg/h* - ***Hopper Capacity*** *1,4 Kg*
Weight *15,5 kg* - ***Dimensions*** *250 x 360 x h635 mm*
Stepless adjustment system
Dosing counter

702685 Macinacaffè M7D "On Demand" Micrometrico
Motore 230V/50Hz 800W 350 rpm
Macine Coniche Ø 68 mm
Produttività 16 kg/h - **Capacità campana** 1,4 kg
Peso 16 kg - **Dimensioni** 250 x 360 x h635 mm
Regolazione micrometrica - Tre dosi programmabili
Dosatura manuale - Dispositivo contadosi

702685 M7D Coffee Grinder "On Demand" Stepless Adjustment System
Motor *230V/50Hz 800W 350 rpm*
Blades *Conical Ø 68 mm*
Productivity *16 kg/h* - ***Hopper Capacity*** *1,4 kg*
Weight *16 kg* - ***Dimensions*** *250 x 360 x h635 mm*
Stepless adjustment system - Three doses programmable
Manual dosing - Dosing counter

702686 Macinadosatore M2 Manuale
Motore 230V/50Hz 150W 1400 rpm
Macine Piana ø 50 mm
Produttività 1 kg/h - **Capacità campana** 250 g
Peso 5,2 kg - **Dimensioni** 152 x 250 x h382 mm
Forcella regolabile in altezza

702686 M2 Manual Coffee Grinder
Motor *230V/50Hz 150W 1400 rpm*
Blades *Flat ø 50 mm*
Productivity *1 kg/h* - ***Hopper Capacity*** *250 g*
Weight *5,2 kg* - ***Dimensions*** *152 x 250 x h382 mm*
Height adjustable fork

702687 Macinacaffè M2D Programmabile
Motore 230V/50Hz 150W 1400 rpm
Macine Piana ø 50 mm
Produttività 3,5 kg/h - **Capacità campana** 250 g
Peso 4,8 kg - **Dimensioni** 152 x 250 x h382 mm
Una dose programmabile
Forcella regolabile in altezza

702687 M2D Programmable Coffee Grinder
Motor *230V/50Hz 150W 1400 rpm*
Blades *Flat ø 50 mm*
Productivity *3,5 kg/h* - ***Hopper Capacity*** *250 g*
Weight *4,8 kg* - ***Dimensions*** *152 x 250 x h382 mm*
One dose programmable
Height adjustable fork

702871 Pressino dinamometrico professional

702871 Dynamometric tamper professional

702834 Pressino dinamometrico professional CPS twist

702834 Dynamometric tamper professional CPS twist

702005 Macinadosatore HC600 Automatico Grigio
702006 Macinadosatore HC600 Automatico Nero
702013 Macinadosatore HC600 Automatico Rosso
702548 Macinadosatore HC600 Automatico Bianco
Motore 230V -50Hz -550W -1600 rpm
Macine Piana ø 64 mm
Produttività 7-9 kg/h - **Capacità campana** 1,2 kg
Peso 14 kg - **Dimensioni** 210x330x600 mm
Consigliato per un consumo giornaliero di caffè di 3 kg.

702005 HC600 Grey Automatic Coffee Grinder
702006 HC600 Black Automatic Coffee Grinder
702013 HC600 Red Automatic Coffee Grinder
702548 HC600 White Automatic Coffee Grinder
***Motor** 230V - 50Hz -550W - 1600 rpm*
***Blades** Flat ø 64 mm*
***Productivity** 7-9 kg/h - **Hopper Capacity** 1,2 kg*
***Weight** 14 kg - **Dimensions** 210x330x600 mm*
Recommended for 3 kg daily coffee consume.

702540 Macinadosatore **HC700** Automatico Silver
702553 Macinadosatore **HC700** Automatico Nero
Motore 230 -50Hz - V 350W - 1600 rpm
Macine Piana ø 64 mm
Produttività 4/18 kg/h - **Capacità campana** 1,2 kg
Peso 15 kg - **Dimensioni** 210x330x600 mm
Consigliato per un consumo giornaliero di caffè di 3-5 kg.

702540 HC700 Automatic Coffee Coffee Grinder Silver
702553 HC700 Automatic Coffee Coffee Grinder Black
Motor *230 -50Hz - V 350W - 1600 rpm*
Blades *Flat ø 64 mm*
Productivity *4/18 kg/h* - ***Hopper Capacity*** *1,2 kg*
Weight *15 kg* - ***Dimensions*** *210x330x600 mm*
Recommended for 3-5 kg daily coffee consume.

702555 Macinadosatore **H5** Nero
Motore 230V- 50-60Hz- 350W
Macine Piana ø 64 mm
Produttività 4/6 kg/h - **Capacità campana** 0,25 kg
Peso 5 kg - **Dimensioni** 135x275x310 mm
Carrozzeria in plastica.
Consigliato per speciality coffee, decaffeinato e casa

702555 Coffee Grinder H5 Black
Motor *230V- 50-60Hz- 350W*
Blades *Flat ø 64 mm*
Productivity *4/6 kg/h* - ***Hopper Capacity*** *0,25 kg*
Weight *5 kg* - ***Dimensions*** *135x275x310 mm*
Recommended for specialty coffee,
decaffeinated and domestic use

702502 Macinadosatore Automatico 'Super Jolly'
Motore 220V- 50Hz- 350W- 1400 rpm
Macine Piana ø 64 mm
Produttività 9 kg/h - **Capacità campana** 1,2 kg
Peso 14 kg - **Dimensioni** 240x420x600 mm
Consigliato per un consumo giornaliero di caffè di 2 kg.

702502 Automatic Coffee Grinder 'Super Jolly'
Motor *220V- 50Hz- 350W- 1400 rpm*
Blades *Flat ø 64 mm*
Productivity *9 kg/h* - ***Hopper Capacity*** *1,2 kg*
Weight *14 kg* - ***Dimensions*** *240x420x600 mm*
Recommended for 2 kg daily coffee consume.

702501 Macinadosatore
Automatico Silenzioso 75M Maxi
Motore 220V-50Hz-370W-900 rpm
Macine Piana ø 75 mm
Produttività 11 kg/h - **Capacità campana** 1 kg
Peso 15 kg - **Dimensioni** 550x210x370 mm
Consigliato per un consumo giornaliero di caffè di 5 kg.

702501 75M Maxi Silent
Automatic Coffee Grinder
Motor *220V-50Hz-370W-900 rpm*
Blades *Flat ø 75 mm*
Productivity *11 kg/h* - ***Hopper Capacity*** *1 kg*
Weight *15 kg* - ***Dimensions*** *550x210x370 mm*
Recommended for 5 kg daily coffee consume.

702510 Macinadosatore Automatico Silenzioso 64M Mito
Motore 220V-50Hz-250W-1400 rpm
Macine Piana ø 64 mm
Produttività 9 kg/h - **Capacità campana** 1 kg
Peso 14 kg - **Dimensioni** 550x210x370 mm
Consigliato per un consumo giornaliero di caffè di 5 kg.

702510 64M Mito Maxi Silent Automatic Coffee Grinder
Motor *220V-50Hz-250W-1400 rpm*
Blades *Flat ø 64 mm*
Productivity *9 kg/h* - ***Hopper Capacity*** *1 kg*
Weight *14 kg* - ***Dimensions*** *550x210x370 mm*
Recommended for 5 kg daily coffee consume.

702572 Macinino Mito "On Demand" M/64 V230/2
Motore 230V-50/60Hz 350W 1400 rpm
Macine Piana ø 64 mm
Produttività 9 kg/h - **Capacità campana** 1,5 kg
Peso 13 kg - **Dimensioni** 550x210x370 mm

702572 Grinder Mito "On Demand" M/64 V230/2
Motor *230V- 50/60Hz- 350W- 1400 rpm*
Blades *Flat ø 64 mm*
Productivity *9 kg/h* - ***Hopper Capacity*** *1,5 kg*
Weight *13 kg* - ***Dimensions*** *550x210x370 mm*

702573 Macinino Mito "On Demand" M/75 V230/2
Motore 230V-50/60Hz 480W 1400 rpm
Macine Piana ø 75 mm
Produttività 11 kg/h **- Capacità campana** 1,5 kg
Peso 13 kg **- Dimensioni** 550x210x370 mm

702573 Grinder Mito "On Demand" M/75 V230/2
Motor *230V- 50/60Hz- 480W- 1400 rpm*
Blades *Flat ø 75 mm*
Productivity *11 kg/h* ***- Hopper Capacity*** *1,5 kg*
Weight *13 kg* ***- Dimensions*** *550x210x370 mm*

702500 Macinadosatore Automatico EB1400A
Motore 220V - 50Hz - 250W - 1400 rpm
Macine Piana ø 64 mm
Produttività 9 kg/h **- Capacità campana** 1 kg
Peso 13 kg **- Dimensioni** 180x340x550 mm
Consigliato per un consumo giornaliero di caffè di 2 kg.

702500 EB1400A Automatic Coffee Grinder with doser
Motor *220V - 50Hz - 250W - 1400 rpm*
Blades *Flat ø 64 mm*
Productivity *9 kg/h* ***- Hopper Capacity*** *1 kg*
Weight *13 kg* ***- Dimensions*** *180x340x550 mm*
Recommended for 2 kg daily coffee consume.

702495 Macinadosatore JUNIOR "On Demand"
Motore 230V - 50-60Hz - 190W - 1400 rpm
Macine Piana Ø 50mm
Produttività 3Kg/h **- Capacità campana** 0,50 kg
Peso 6,5 kg **- Dimensioni** 150x360x260 m
Carrozzeria in metallo.
Consigliato per piccoli ristoranti o per decaffeinato.

702495 Grinder JUNIOR "On Demand"
Motor *50-60Hz - 190W - 1400 rpm*
Blades *Flat ø 50 mm*
Productivity *3 kg/h* ***- Hopper Capacity*** *0.50 kg*
Weight *6,5 kg* ***- Dimensions*** *150x360x260 mm*
Recommended for small restaurants or decaffeinated coffee use.

702018 Macinadosatore 'Junior' Manuale
Motore 220V-50Hz-100W-1400 rpm
Macine Piana ø 50 mm
Produttività 3 kg/h **- Capacità campana** 0,25 kg
Peso 6 kg **- Dimensioni** 180x290x410 mm
Carrozzeria in plastica.
Consigliato per uso domestico.

702018 'Junior' Manual Coffee Grinder
Motor *220V - 50Hz - 100W -1400 rpm*
Blades *Flat ø 50 mm*
Productivity *3 kg/h* ***- Hopper Capacity*** *0,25 kg*
Weight *6 kg* ***- Dimensions*** *180x290x410 mm*
Plastic body.
Recommended for domestic use.

702508 'Deluxe' Macinacaffè
Motore 220/240V - 50Hz - 150W - 1400rpm
Macine Coniche ø 38 mm
Capacità campana 0,2 kg
Peso 2,9 kg **- Dimensioni** 110x230x340 mm
Regolazione macine micrometrica.
Carrozzeria in acciaio inox.

702508 'Deluxe' Coffee Grinder
Motor *220/240V - 50Hz - 150W - 1400rpm*
Blades *Conical ø 38 mm*
Hopper Capacity *0.2 kg*
Weight *2.9 kg* ***- Dimensions*** *110x230x340 mm*
Stainless steel body.
With micrometric adjustable grinding.

702503 Macinacaffè Casa
Motore 220/240V - 50Hz - 150W 1400rpm
Macine Coniche ø 38 mm **- Capacità campana** 0,2 kg
Peso 2 kg **- Dimensioni** 95x180x300 mm
Carrozzeria in acciaio inox.

702503 Home Coffee Grinder
Motor *220/240V-50Hz-50W-1400 rpm*
Blades *Conical ø 38 mm* ***- Hopper Capacity*** *0.2 kg*
Weight *2 kg* ***- Dimensions*** *95x180x300 mm*
Stainless steel body.

200003

Espresso made in Italy 1901-1962
Dalla Collezione Enrico Maltoni prende forma la prima pubblicazione che ripercorre la storia della macchina da caffè espresso, dalla sua invezione ai modelli degli anni Sessanta, attraverso un secolo di evoluzione tecnica, formale e funzionale.

Espresso made in Italy 1901-1962
Enrico Maltoni's Collection gives shape to the first pubblication that traces the histrory of espresso coffee machine; from his invention to the 60's designs, through a century of technical and functional evolution.

200026

Faema Espresso 1945-2010
400 pagine con oltre 500 immagini.
Il primo libro al mondo che racconta la vera storia della Faema, dalle vicende personali a quelle strettamente aziendali, dalla sua fondazione ai giorni nostri.
Denso di fatti raccontati dopo avere raccolto le testimonianze di familiari e conoscenti del fondatore Carlo Ernesto Valente.
Brevetti, schede tecniche e depliant originali a corredo di immagini, inedite, delle bellissime e antiche macchine per caffè espresso Faema.

Faema Espresso 1945-2010
The first book that tells Faema's real story from its establishment till today, going through personal events to business ones.
The book is filled with stories about its foundator Carlo Ernesto Valente, told by his family and people that new him.
Patents, technical diagrams, original flyers together with unpublished photographs Faema's stunning vintage espresso coffee machines will visually guide you through the book.

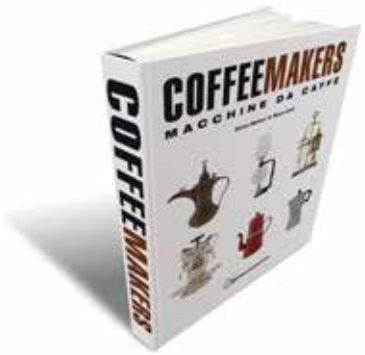

200079

Coffeemakers
Enciclopedia della caffettiera, opera unica nel suo genere per la mole di documentazione mostrata: 2700 immagini, 2080 descrizioni tecniche e numerosi testi divisi nei vari periodi storici.Tutte le tipologie di caffettiere realizzate fino ai nostri giorni, fotografate direttamente nelle case dei collezionisti di tutto il mondo

Coffeemakers
A unique encyclopaedia of coffee makers packed with information: 2700 images, 2080 technical descriptions and countless texts split into various historical periods.This book features all the different kinds of coffee makers produced to date, photographed in the homes of collectors from all over the world.

NUOVA RICAMBI srl

Via dei Mille 20
20061 Carugate (MI)

T +39 02 9253205
F +39 02 9254286

www.nuovaricambi.it • info@nuovaricambi.it

9 900000 146306