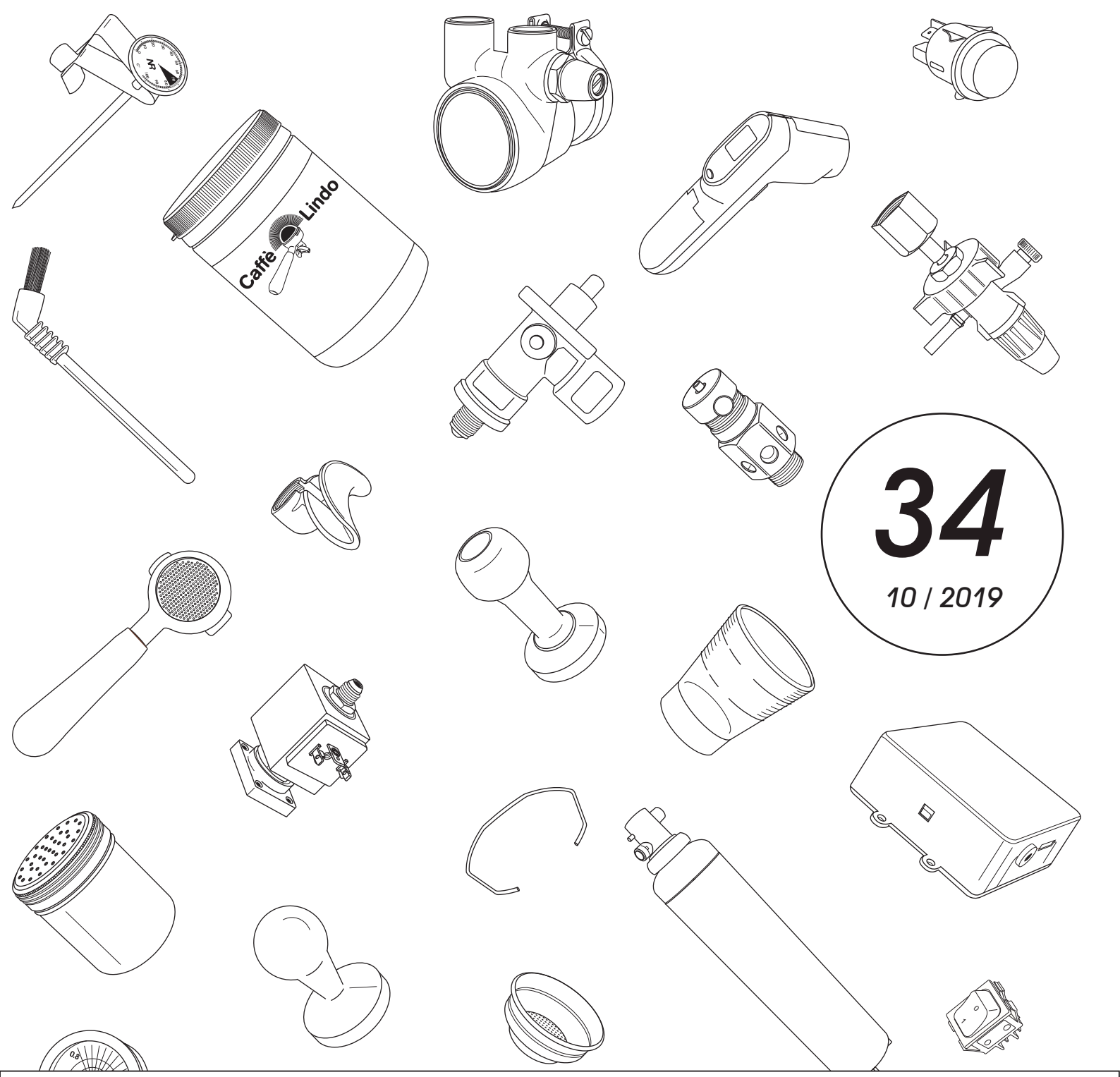

34

10 / 2019

NUOVA RICAMBI

CATALOGO RICAMBI

SPARE PARTS CATALOGUE • CATALOGUE PIÈCES DE RECHANGE
ERSATZTEILKATALOG • CATÁLOGO DE RECAMBIOS

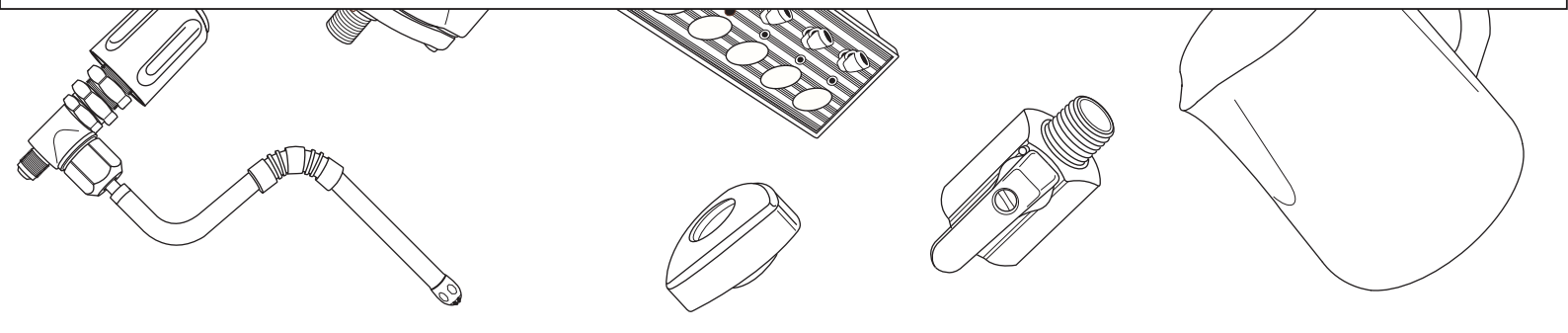

Avvertenze
I disegni presenti in questo catalogo, sono stati realizzati dalla Nuova Ricambi srl, qualsiasi eventuale somiglianza è riconducibile alla similarità degli articoli in commercio.
Ne è vietata la riproduzione, anche parziale, senza autorizzazione scritta dalla Nuova Ricambi srl.
Ogni violazione sarà perseguita secondo i termini di legge.

Remarques
Les dessins présentés dans ce catalogue, ont été réalisés par Nuova Ricambi srl. D'éventuelles réssemblances peuvent dériver de la similarité des produits commercialisés.
La reproduction, même partielle, sans écrite autorisation de la Société Nuova Ricambi srl est interdite.
Toute violation sera poursuivie selon la Législation en vigueur.

Remarks
The drawings in this catalogue are realized by Nuova Ricambi srl, any similarity to other products is purely casual.
The reproduction or even partial reproduction of the same, is strictly forbidden without the written authorisation of Nuova Ricambi srl.
Any violation of these conditions will be subject to legal action.

Hinweise
Die Zeichnungen, die in diesem Katalog enthalten sind, wurden von der Firma Nuova Ricambi srl realisiert. Ähnlichkeiten mit anderen Produkten sind auf die Gleichartigkeit der vermarkteten Artikel zurückzuführen.
Jede Reproduktion und Verbreitung, ganz oder teilweise, ist ohne die Genehmigung von Nuova Ricambi Srl nicht erlaubt.
Jede Zuwiederhandlung wird gesetzlich verfolgt.

MACCHINE CAFFE' • COFFEE MACHINES

Astoria /CMA ..... 3 - 12
Aurora- Brugnetti ..... 13 - 15
Bezzera ..... 16 - 22
BFC - ROYAL ..... 23 - 32
Brasilia ..... 33 - 45
Carimali ..... 46 - 51
Casadio ..... 52 - 58
Cimbali ..... 59 - 70
Conti ..... 71 - 77
Dalla Corte ..... 78 - 82
ECM ..... 83 - 90
Elektra ..... 91 - 95
Expobar ..... 96 - 102
Faema ..... 103 - 135
Fiamma RST ..... 136 - 143
Futurmat - Ariete ..... 144 - 149
Gaggia ..... 150 - 157
La Marzocco ..... 158 - 162
La San Marco ..... 163 - 170
La Spaziale ..... 171 - 178
Nuova Simonelli ..... 179 - 189
Pavoni ..... 190 - 201
Promac ..... 202 - 206
Rancilio ..... 207 - 218
Sanremo ..... 219 - 226
Vibiemme ..... 227 - 238
Victoria Arduino ..... 239 - 241
Wega ..... 242 - 249

LAVASTOVIGLIE • DISHWASHERS

Comenda - Faema ..... 250 - 257

FABBRICATORI DI GHIACCIO • ICE MAKERS

Brema 258
Frimont - Faema 259
Simag - Faema 260

VARI • VARIOUS

Depuratori e filtri acqua *Softeners and water filters* ..... 261 - 268
Elettropompe - Pompe *Motor pumps - Pumps* ..... 269 - 272
Tubi *Pipes* ..... 273 - 274
Raccordi *Fittings* ..... 275 - 278
Cappuccinatori *Milk Frothers* 279
Portafiltri *Filter holders* ..... 280 - 282
Prodotti chimici *Chemical products* ..... 283 - 286
Componenti macchine caffè *Coffee machine's components* ..... 287 - 301

MACINADOSATORI • COFFEE GRINDERS

Anfim ..... 301 - 309
Bnz 310
Compak 311
Eureka ..... 312 - 320
Faema ..... 321 - 322
Fiorenzato ..... 323 - 3244
H 5 325
HC 600 326
HC 700 327
Macap ..... 328 - 334
Mazzer ..... 335 - 342
Nuova Simonelli ..... 343 - 344
Obel ..... 345 - 349
Quamar ..... 350 - 353
Rancilio ..... 354 - 355
Rossi ..... 356 - 357
Lux-Delux 358
Vari Macinini - *Various Grinders* ..... 359 - 360
Elenco Macine - *Grindstones List* ..... 361 - 365

ACCESSORI • ACCESSORIES

Pressini *Tampers* 1
Filtri Competizione *Competition Filter* ..... 2 - 3
Docce Competizione *Competition Shower* ..... 4 - 6
Supporti Portafiltri *Filter Holder Support* 7
Lattiere - Accessori *Milk Jugs - Accessories* ..... 8 - 11
ACAIA 12
Cafelat ..... 13 - 16
Clockwork 17
Crema Pro ..... 18 - 19
EDO ..... 20 - 37
HARIO ..... 38 - 40
HIROIA 41
Ipa ..... 42 - 44
IWAKI 45
Pallo 46
Profondi 47
Pulman ..... 48 - 49
Strumenti di Misura *Measuring Accessories* ..... 50 - 51
Accessori di Pulizia *Cleaning Accessories* 52
Portafiltro con Manometro *Filter Holder with Manometer* 53
Cassetti Battifondi *Knock Box Drawers* ..... 54 - 55
Portafiltri senza Fondo *Naked Filter Holders* ..... 56 - 57
Portafiltro Cialde e Portafiltro Teflonato *Filter Holder for Pods and Teflon Coated Filter Holder* 58
Portafiltri per capsule *Capsule Filter Holder* ..... 59 - 60
New Kit Professional Coffee Test 61
Coffee Bean Roasting System 62
Coffee Queen Original 63
Macinadosatori *Coffee Grinders* ..... 64 - 69
Libri Collezione Enrico Maltoni *Enrico Maltoni Collection's Books* 70

ASTORIA / CMA

CALYPSO - CORE600 - DIVINA - GLORIA - GRETA - SABRINA
SIBILLA - TANYA - RAPALLO - GRUPPO 58 mm

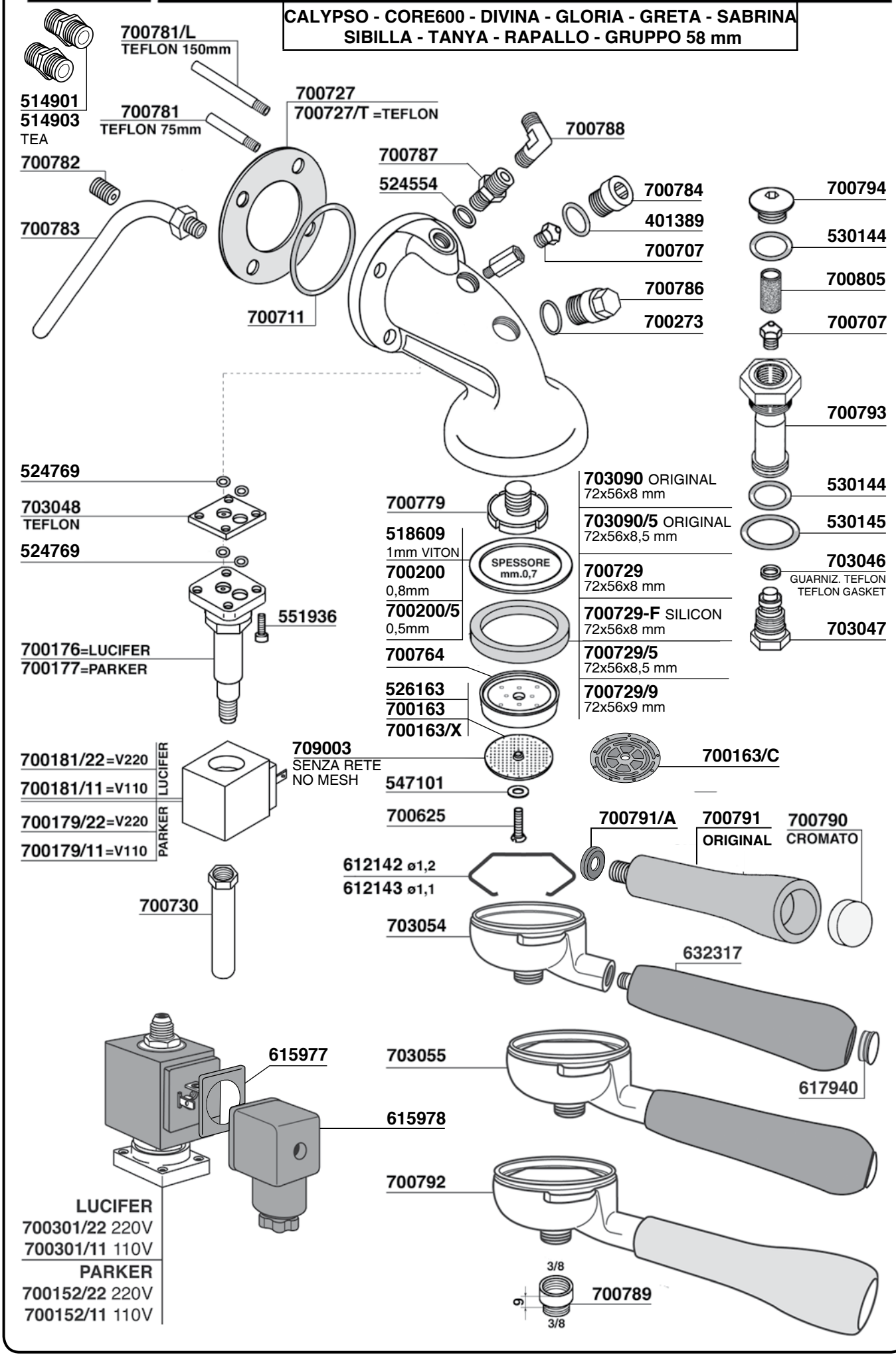

ASTORIA / CMA

GRUPPO 53 mm

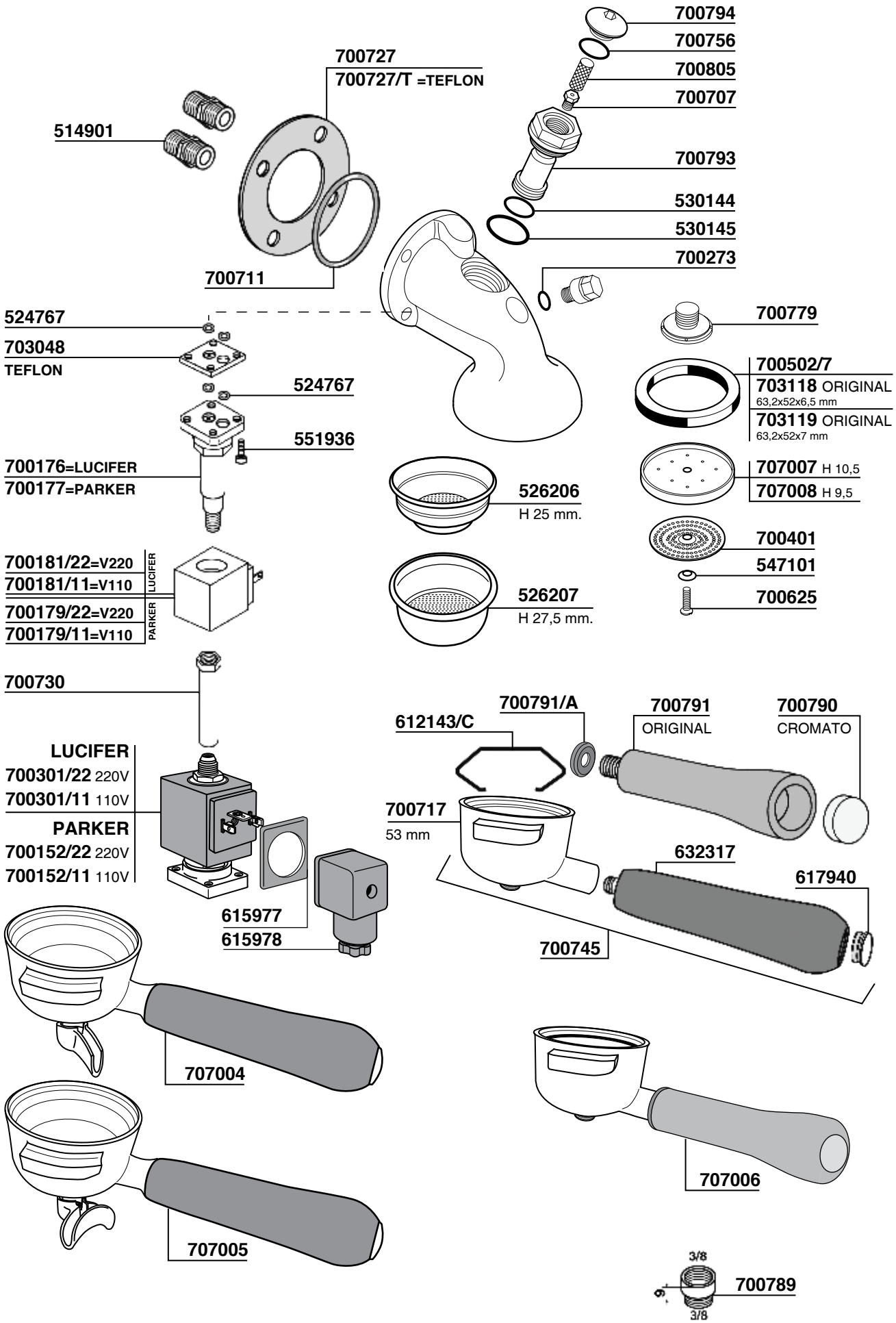

ASTORIA / CMA

ARGENTA - BRAVA - DORA - LISA - PRATIC

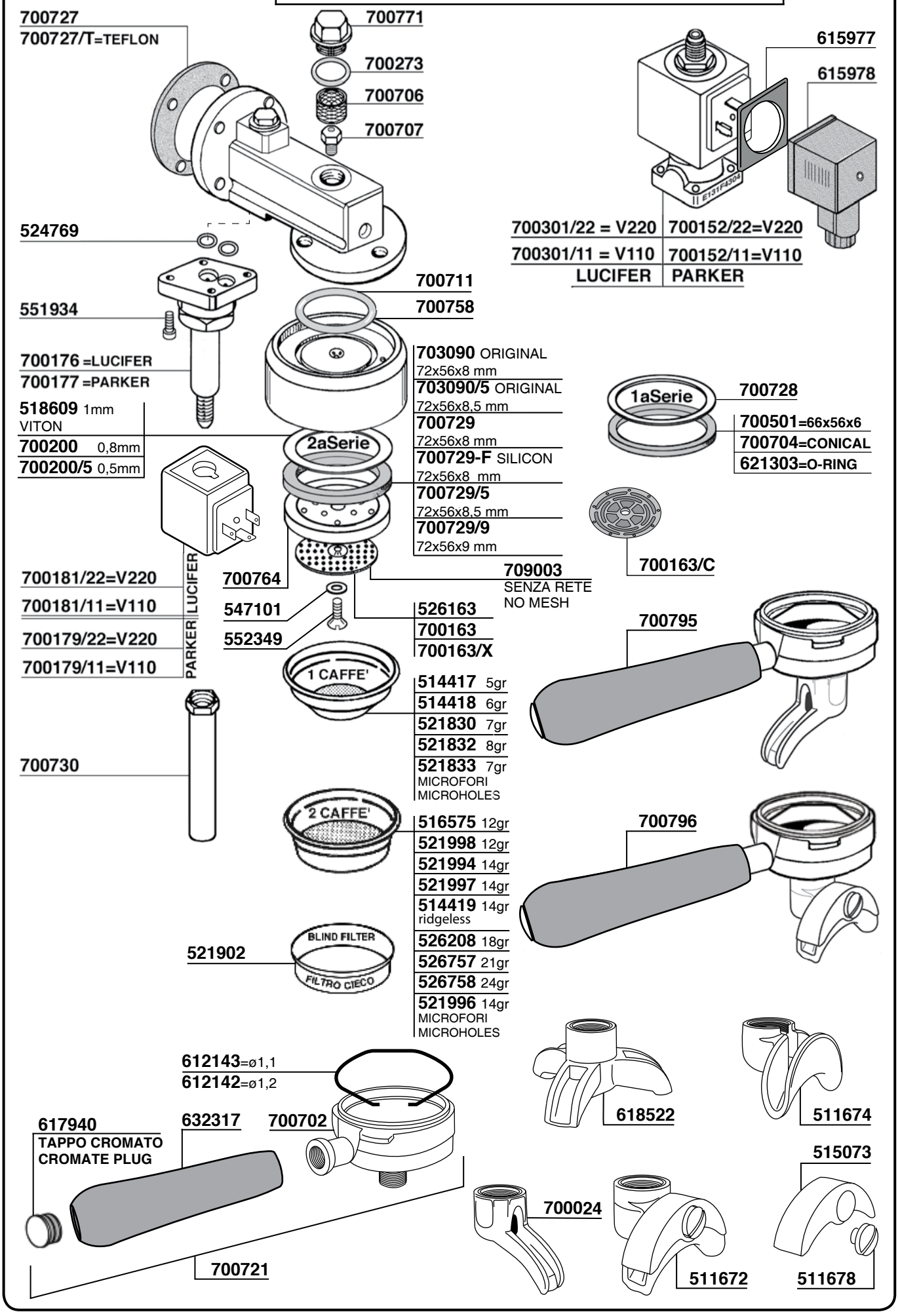

ASTORIA / CMA

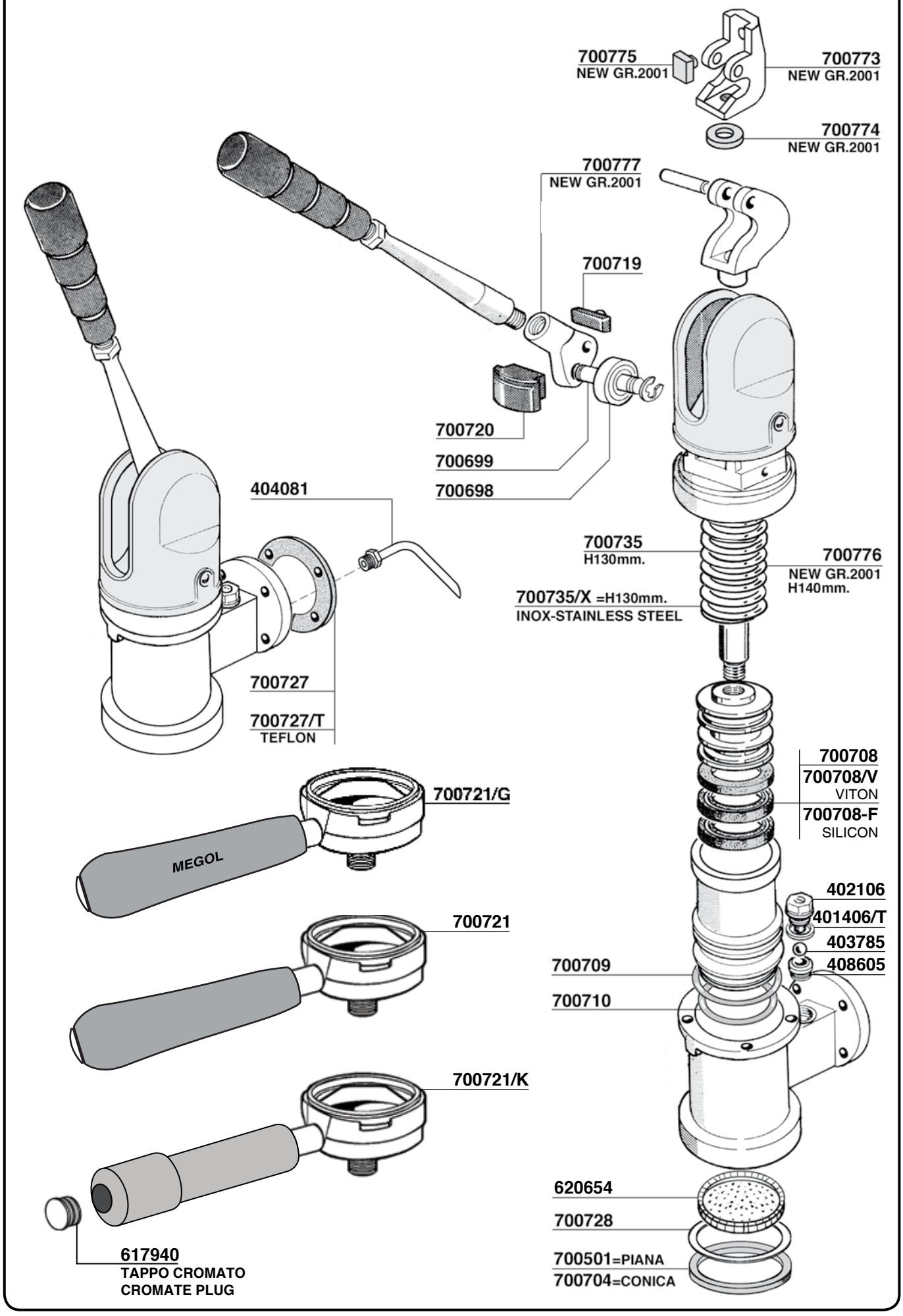
700775
NEW GR.2001
700773
NEW GR.2001
700774
NEW GR.2001
700777
NEW GR.2001
700719
700720
700699
700698
404081
700735
H130mm.
700776
NEW GR.2001
H140mm.
700735/X =H130mm.
INOX-STAINLESS STEEL
700727
700727/T
TEFLON
700708
700708/V
VITON
700708-F
SILICON
700721/G
MEGOL
402106
401406/T
403785
408605
700721
700709
700710
700721/K
620654
700728
700501=PIANA
700704=CONICA
617940
TAPPO CROMATO
CROMATE PLUG

ASTORIA / CMA

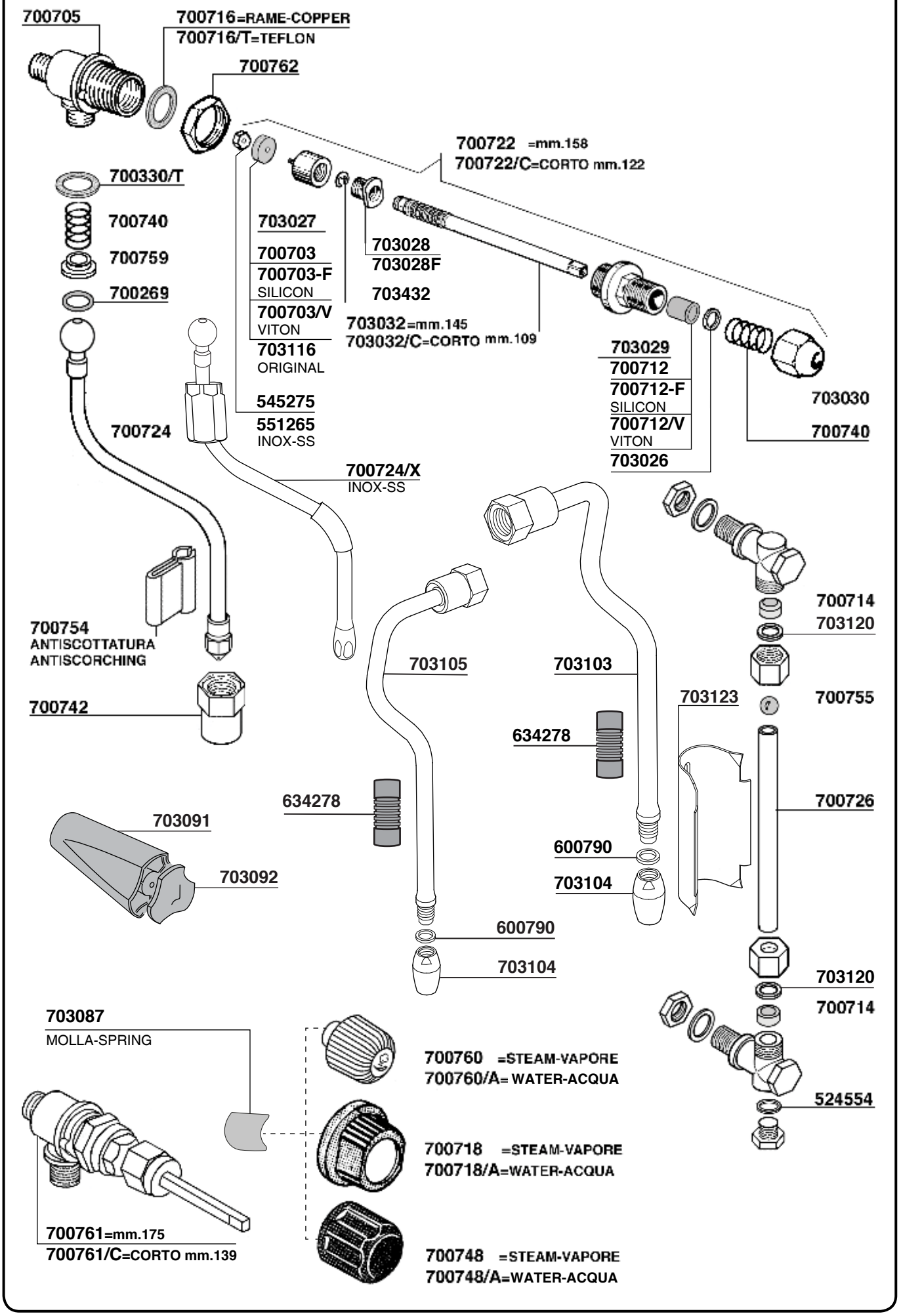
700705
700716=RAME-COPPER
700716/T=TEFLON
700762
700722 =mm.158
700722/C=CORTO mm.122
700330/T
700740
700759
700269
703027
700703
700703-F
SILICON
700703/V
VITON
703116
ORIGINAL
703028
703028F
703432
703032=mm.145
703032/C=CORTO mm.109
703029
700712
700712-F
SILICON
700712/V
VITON
703026
703030
700740
545275
551265
INOX-SS
700724
700724/X
INOX-SS
700754
ANTISCOTTATURA
ANTISCORCHING
700742
703105
703103
634278
634278
703091
703092
600790
703104
600790
703104
700714
703120
703123
700755
700726
703120
700714
524554
703087
MOLLA-SPRING
700760 =STEAM-VAPORE
700760/A= WATER-ACQUA
700718 =STEAM-VAPORE
700718/A=WATER-ACQUA
700748 =STEAM-VAPORE
700748/A=WATER-ACQUA
700761=mm.175
700761/C=CORTO mm.139

ASTORIA / CMA

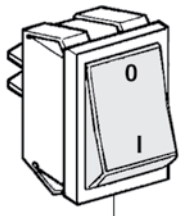

700429

703025
25A 0-1-2

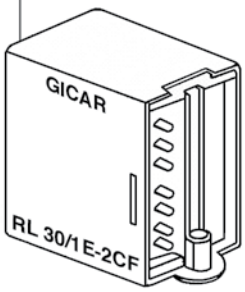

700737 =V220
700737/11=V110

613656

700769
32A 0-1

615978/T

617903/G

530148

551937

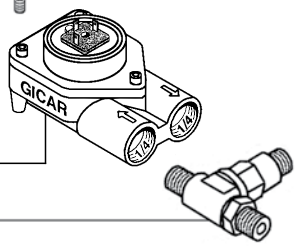

620405

703007

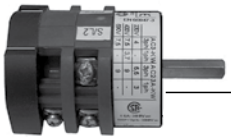

700749
20A 0-1

700574=V220
700574/11=V110

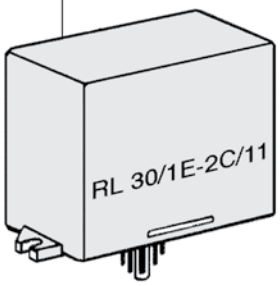

620405/C

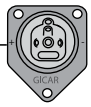

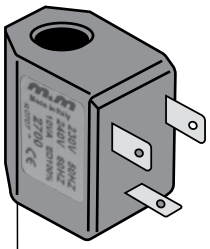

700648/11 =V110/60
700648/22 =V230/50/60
700648/24 =V240/50/60

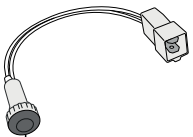

703122

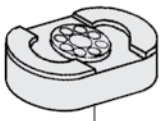

401920

703082

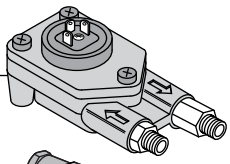

615978/T

615979

617903

530148

551937

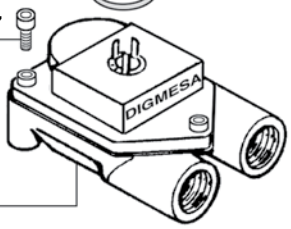

700621

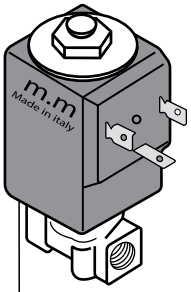

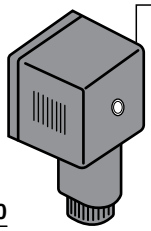

615978/P

700253/22 =V220
700253/11 =V110

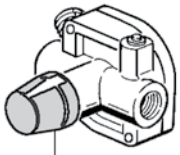

700464

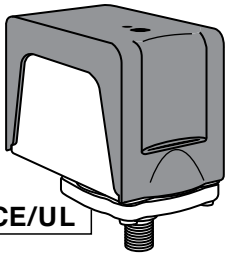

616597 CE/UL

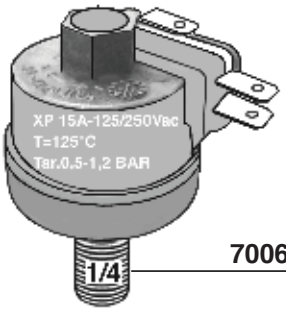

700662

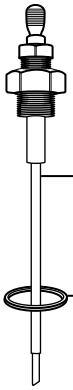

612601 120mm

524554

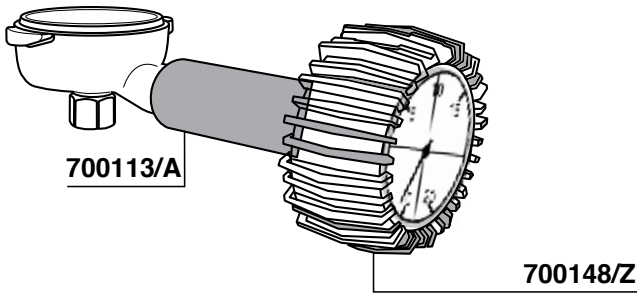

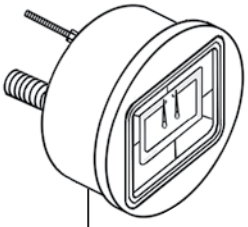

700701 = 2 SCALE Ø63
700768 = 1 SCALA Ø63

MOTORE RAFFREDDATO AD ACQUA - MOTOR WATERCOOL

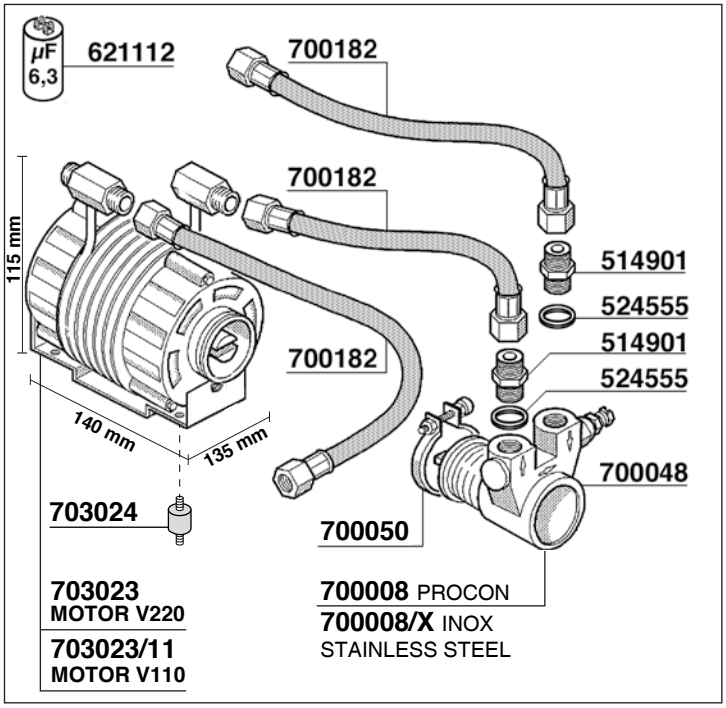

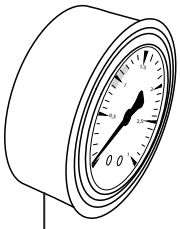

703102 Ø62

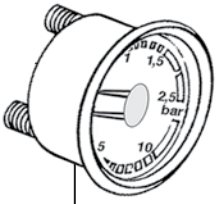

700411 Ø60

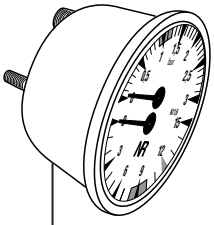

703083 Ø63

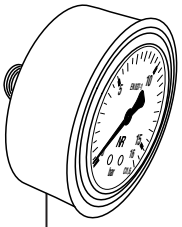

703084 Ø63

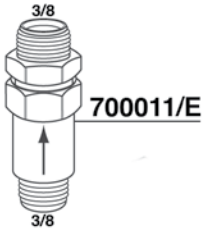

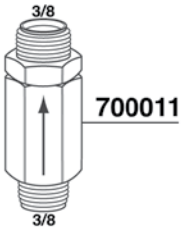

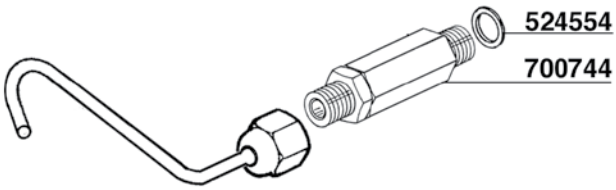

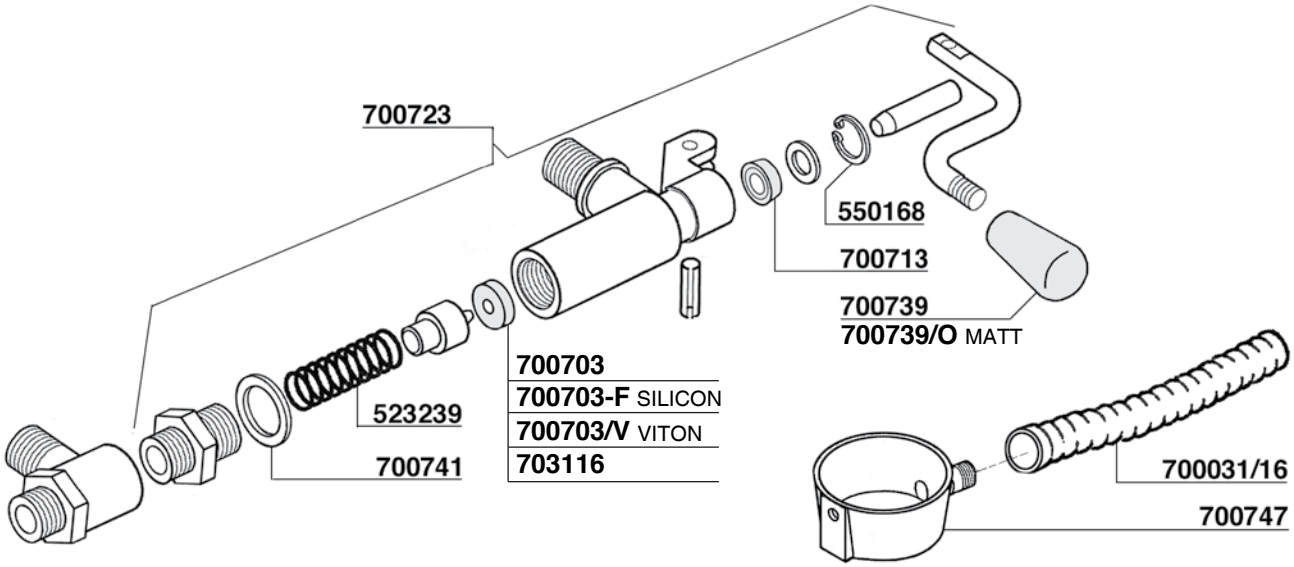

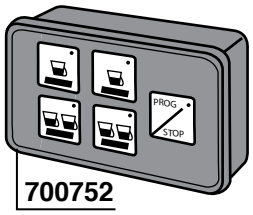

700752
PULSANTIERA
TOUCHPAD

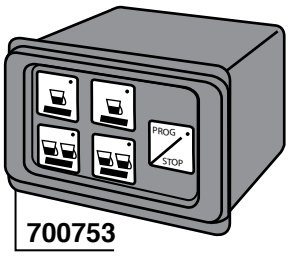

700753
PULSANTIERA - CENTRALINA
TOUCHPAD - ELECTRONIC BOX

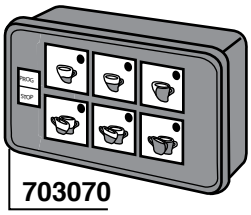

703070
PULSANTIERA - TIMER
TOUCHPAD - TIMER

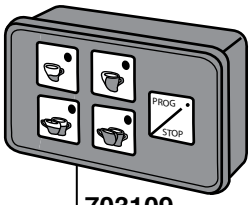

703109
PULSANTIERA
TOUCHPAD

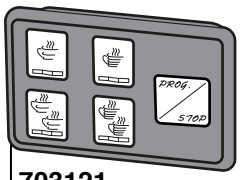

703121
PULSANTIERA
TOUCHPAD

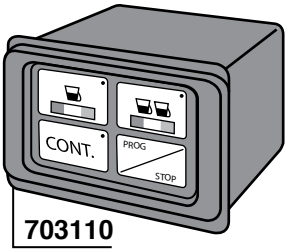

703110
PULSANTIERA - TIMER
TOUCHPAD - TIMER

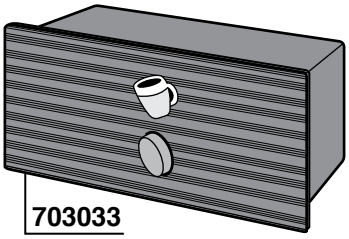

703033
PULSANTIERA MANUALE
MANUAL TOUCHPAD

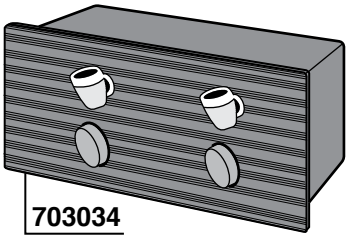

703034
PULSANTIERA MANUALE
MANUAL TOUCHPAD

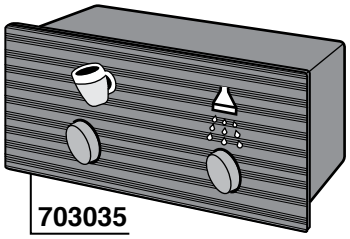

703035
PULSANTIERA MANUALE
MANUAL TOUCHPAD

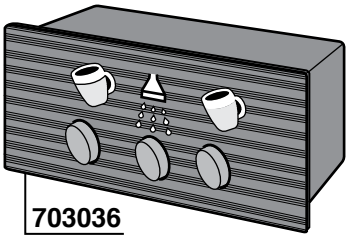

703036
PULSANTIERA MANUALE
MANUAL TOUCHPAD

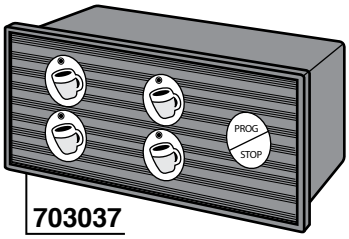

703037
PULSANTIERA
TOUCHPAD

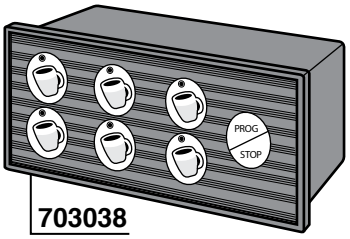

703038
PULSANTIERA
TOUCHPAD

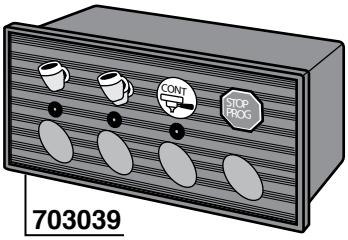

703039
PULSANTIERA - TIMER - LIVELLO
TOUCHPAD - TIMER - LEVEL

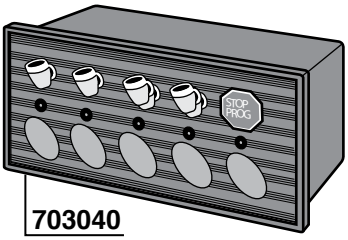

703040
PULSANTIERA - THE' - LIVELLO
TOUCHPAD - TEA - LEVEL

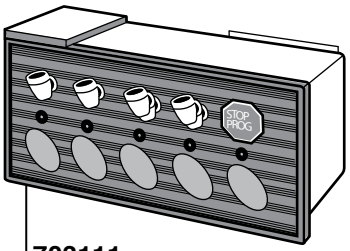

703111
PULSANTIERA
TOUCHPAD

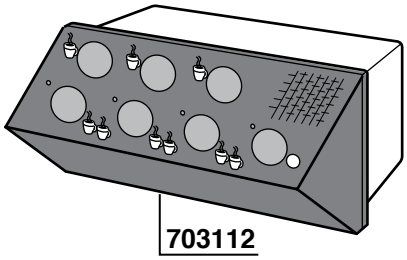

703112
PULSANTIERA
TOUCHPAD

ASTORIA / CMA

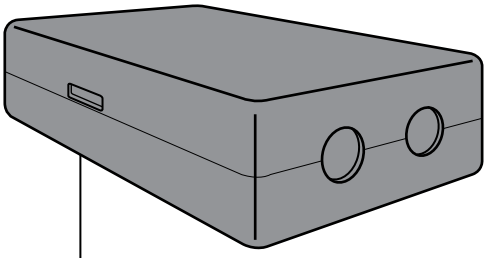

703041 230V
703042 120V
CENTRALINA DIVINA 1/2/3 GRUPPI
DIVINA ELECTRONIC BOX 1/2/3 GROUPS

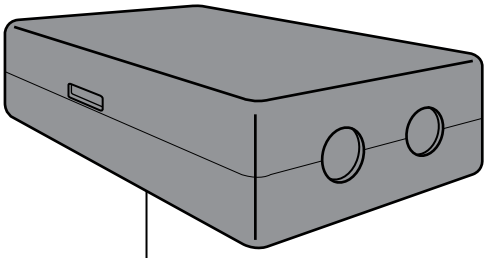

703100 1-3GR 230V PLUS1
703101 1-4GR PLUS2 GICAR CODE 9.5.21.40 G00
703106 1-3GR 230V PLUS3
703006 1/2/3 GR 230V LISA OLD / ARGENTA

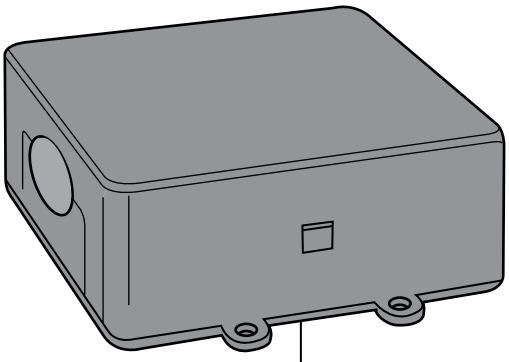

703099 GICAR CODE 9.5.24.21 G

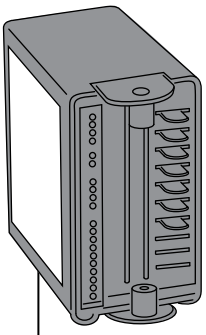

703107 GICAR CODE 9.5.37.08 G01
703108 GICAR CODE 9.5.37.07 G01

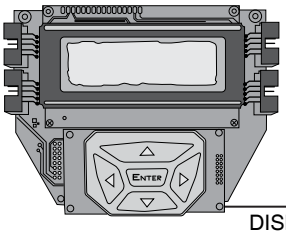

700799
DISPLAY P4Y-09

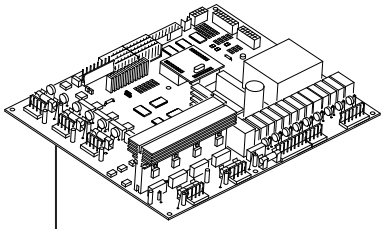

707000 1-4 GR 230V P4U

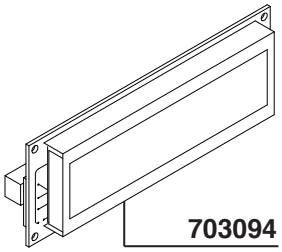

703094

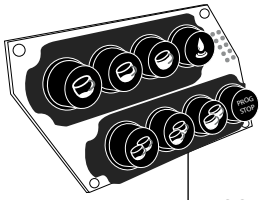

700797
P4U SX/LF

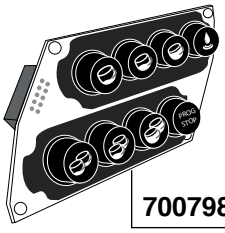

700798
P4U DX/RH

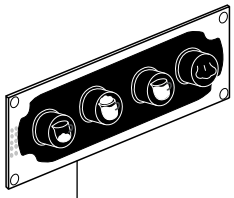

700746
AUTOSTEAMER

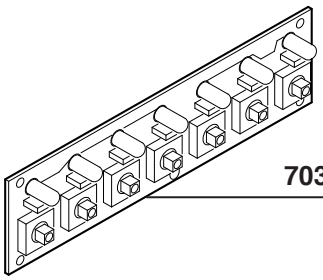

703113

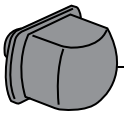

703059
CROMATO
CHROME PLATED

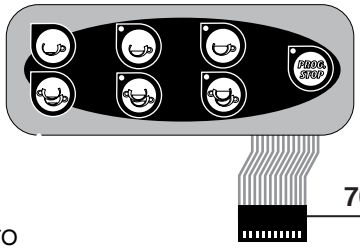

703114

703093
BLACK

703097

703096

703031
BIPOLAR SWITCH

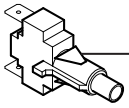

703095

703098

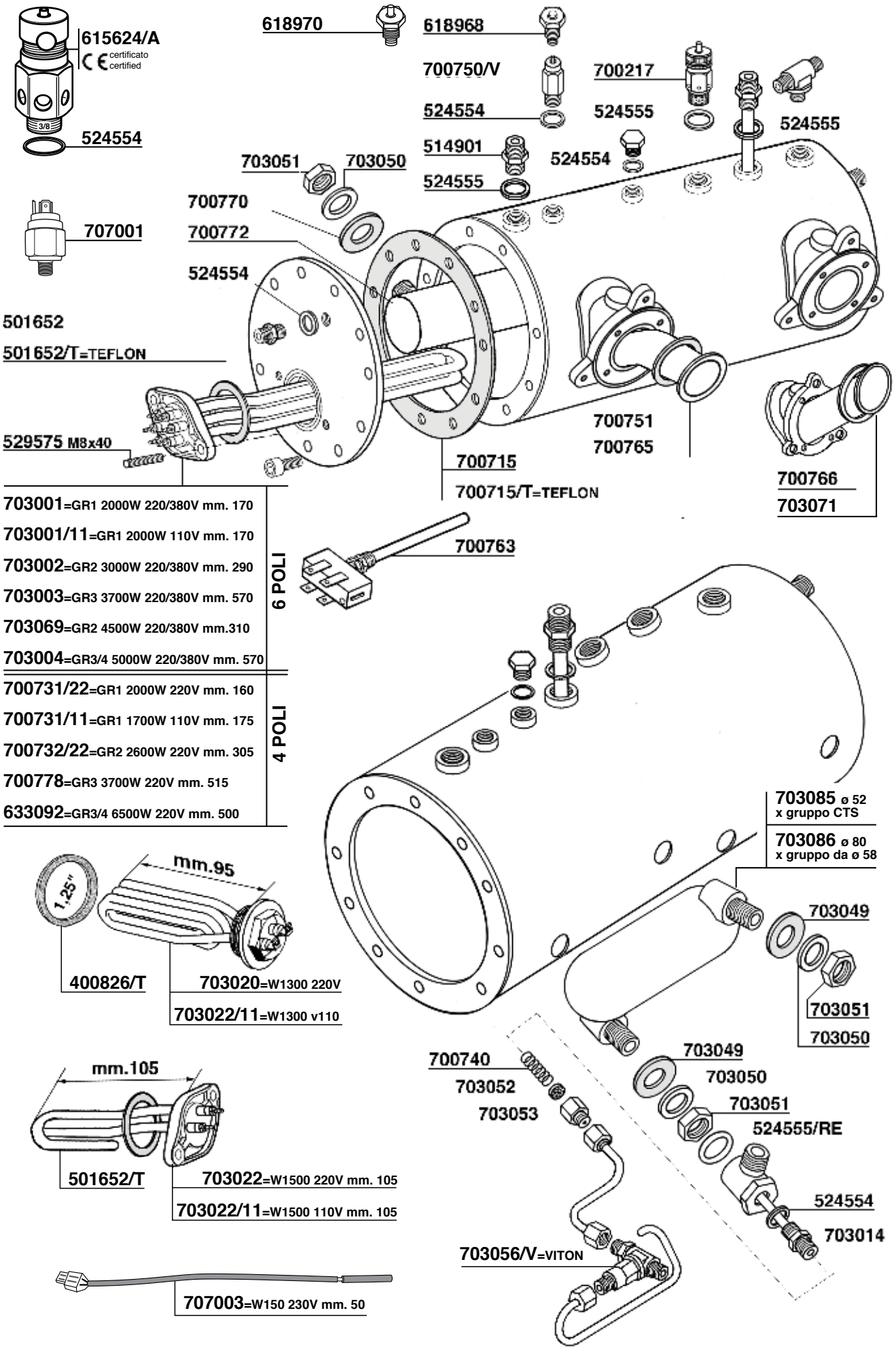

703001=GR1 2000W 220/380V mm. 170	6 POLI
703001/11=GR1 2000W 110V mm. 170	6 POLI
703002=GR2 3000W 220/380V mm. 290	6 POLI
703003=GR3 3700W 220/380V mm. 570	6 POLI
703069=GR2 4500W 220/380V mm.310	6 POLI
703004=GR3/4 5000W 220/380V mm. 570	6 POLI
700731/22=GR1 2000W 220V mm. 160	4 POLI
700731/11=GR1 1700W 110V mm. 175	4 POLI
700732/22=GR2 2600W 220V mm. 305	4 POLI
700778=GR3 3700W 220V mm. 515	4 POLI
633092=GR3/4 6500W 220V mm. 500	4 POLI

NUOVA RICAMBI AURORA-BRUGNETTI Tav. 01

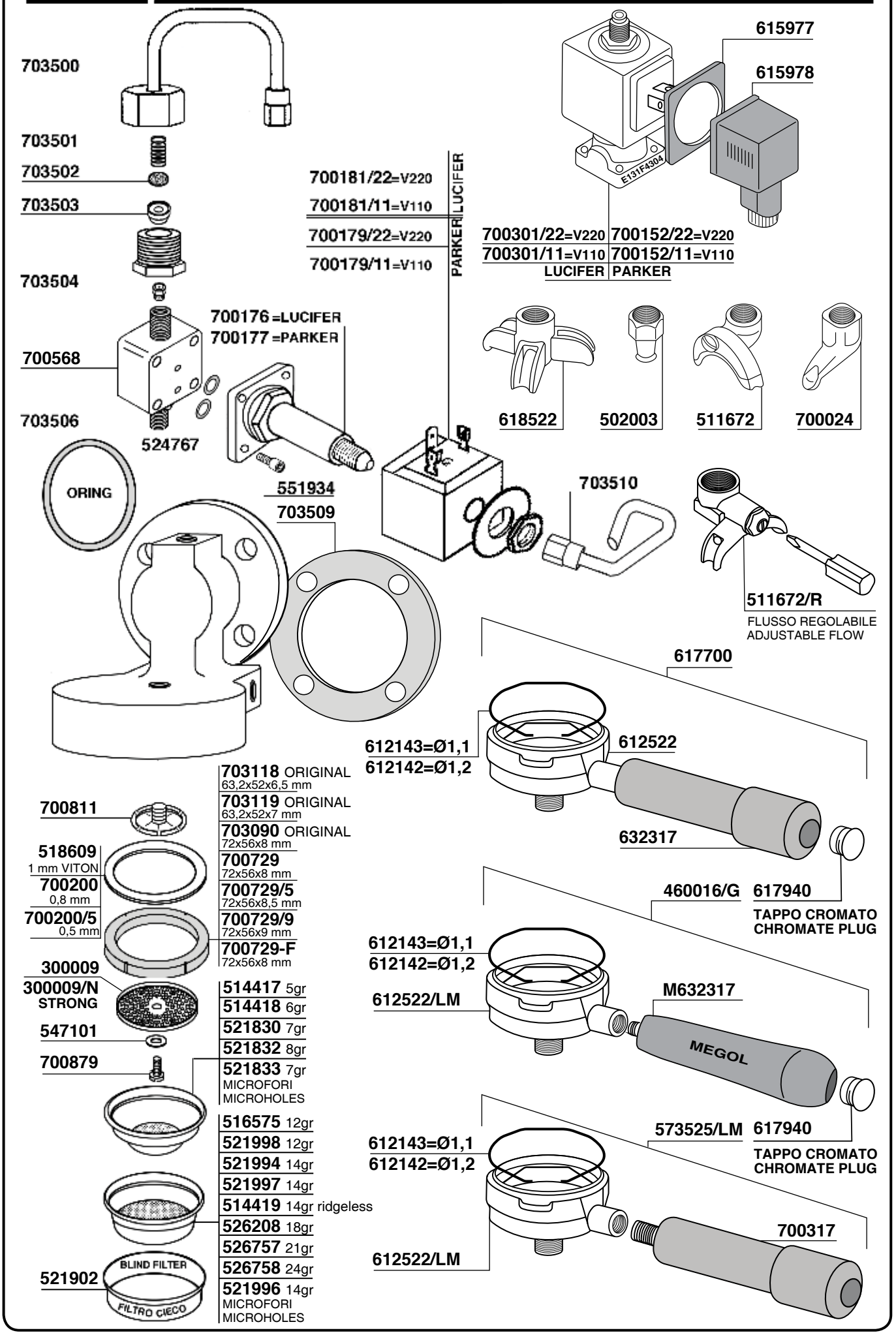

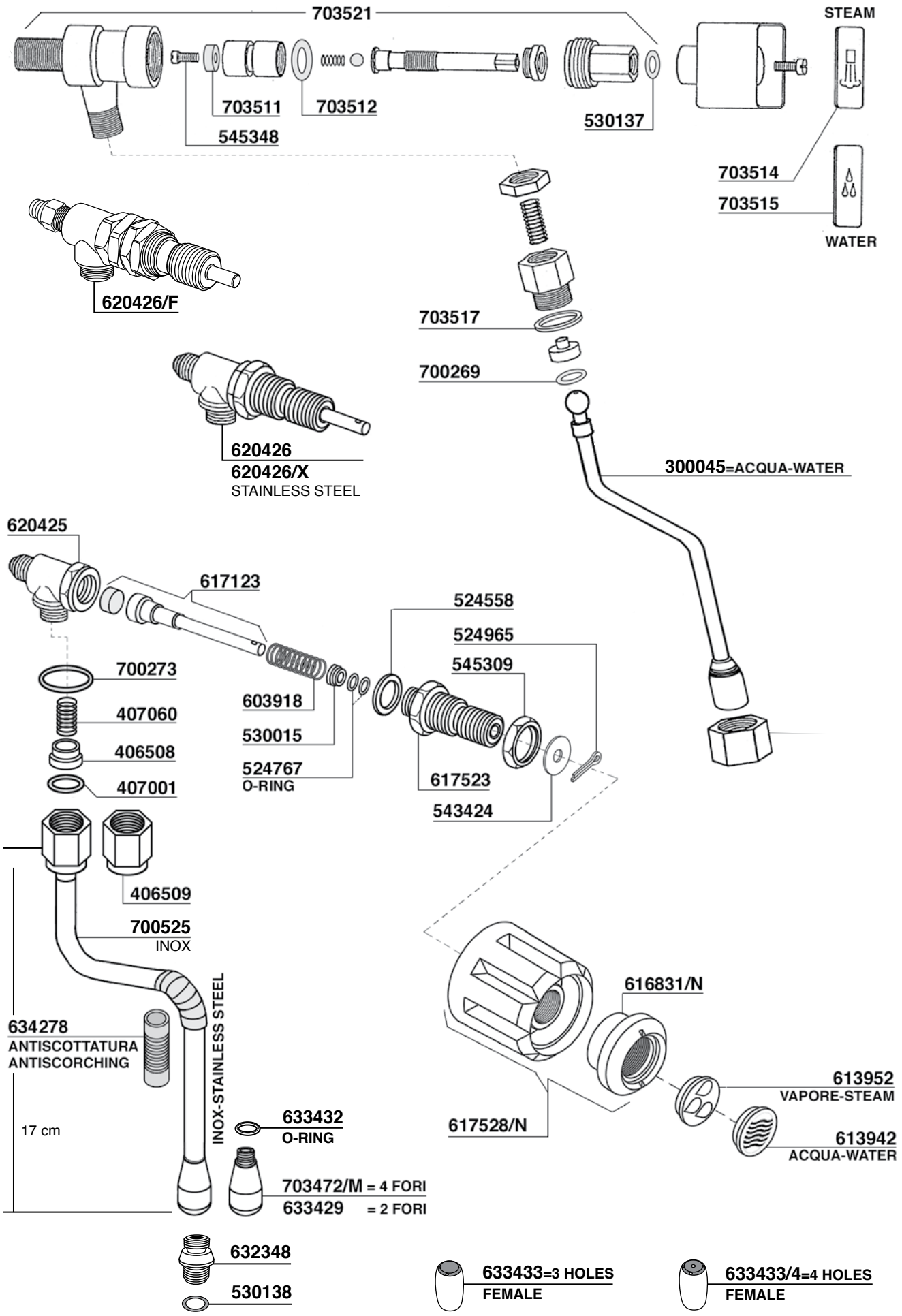
703521
STEAM
703511
703512
530137
545348
703514
703515
WATER
620426/F
703517
700269
620426
620426/X
STAINLESS STEEL
300045=ACQUA-WATER
620425
617123
524558
524965
545309
700273
603918
407060
530015
406508
524767
O-RING
617523
407001
543424
406509
700525
INOX
616831/N
634278
ANTISCOTTATURA
ANTISCORCHING
INOX-STAINLESS STEEL
613952
VAPORE-STEAM
633432
O-RING
617528/N
613942
ACQUA-WATER
17 cm
703472/M = 4 FORI
633429 = 2 FORI
632348
530138
633433=3 HOLES
FEMALE
633433/4=4 HOLES
FEMALE

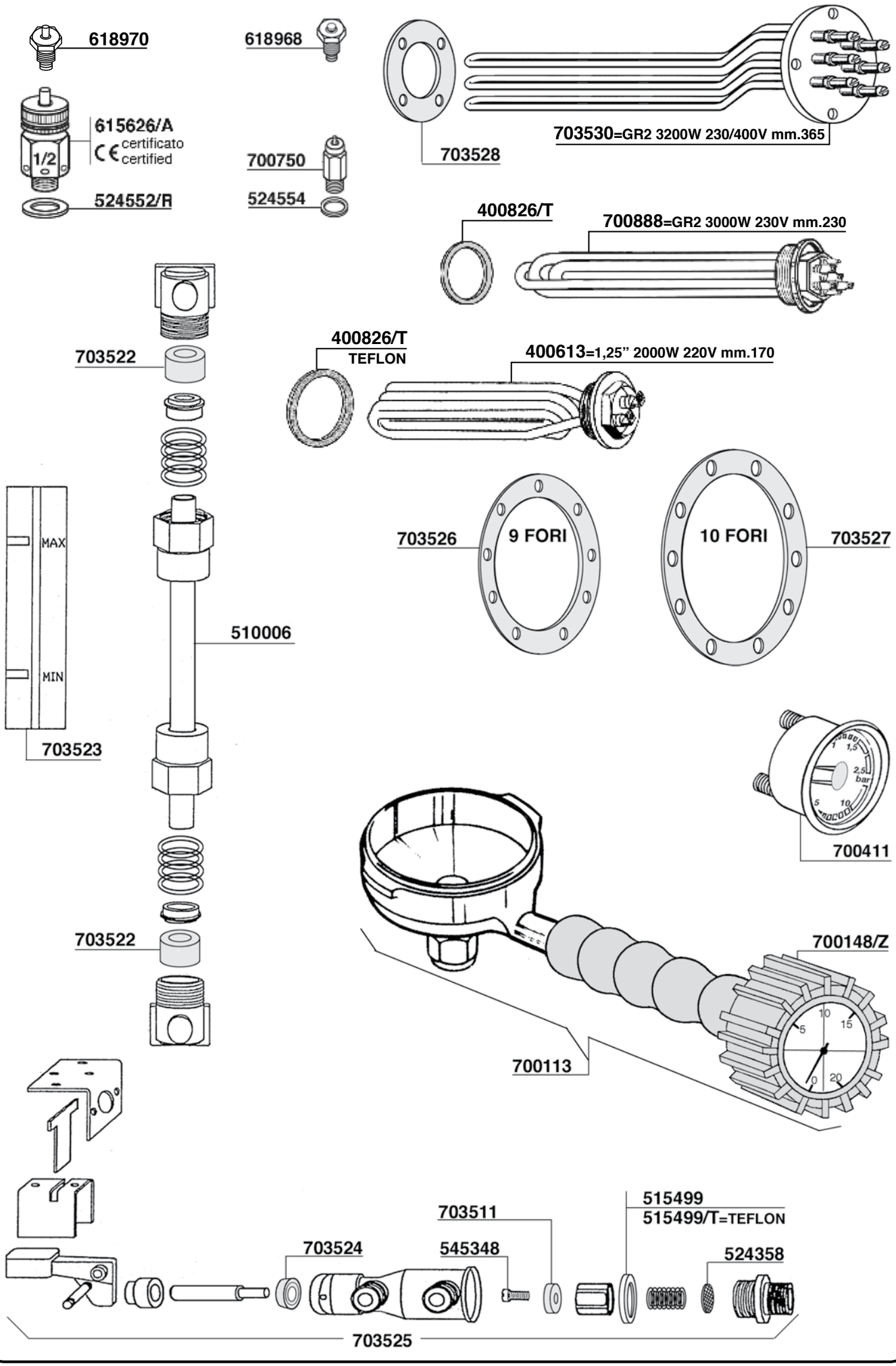
618970
618968
615626/A
certificato
certified
1/2
700750
524552/R
524554
703528
703530=GR2 3200W 230/400V mm.365
400826/T
700888=GR2 3000W 230V mm.230
703522
400826/T
TEFLON
400613=1,25" 2000W 220V mm.170
MAX
MIN
703526
9 FORI
10 FORI
703527
510006
703523
700411
703522
700148/Z
700113
703511
515499
515499/T=TEFLON
703524
545348
524358
703525

NUOVA RICAMBI BEZZERA Tav. 01

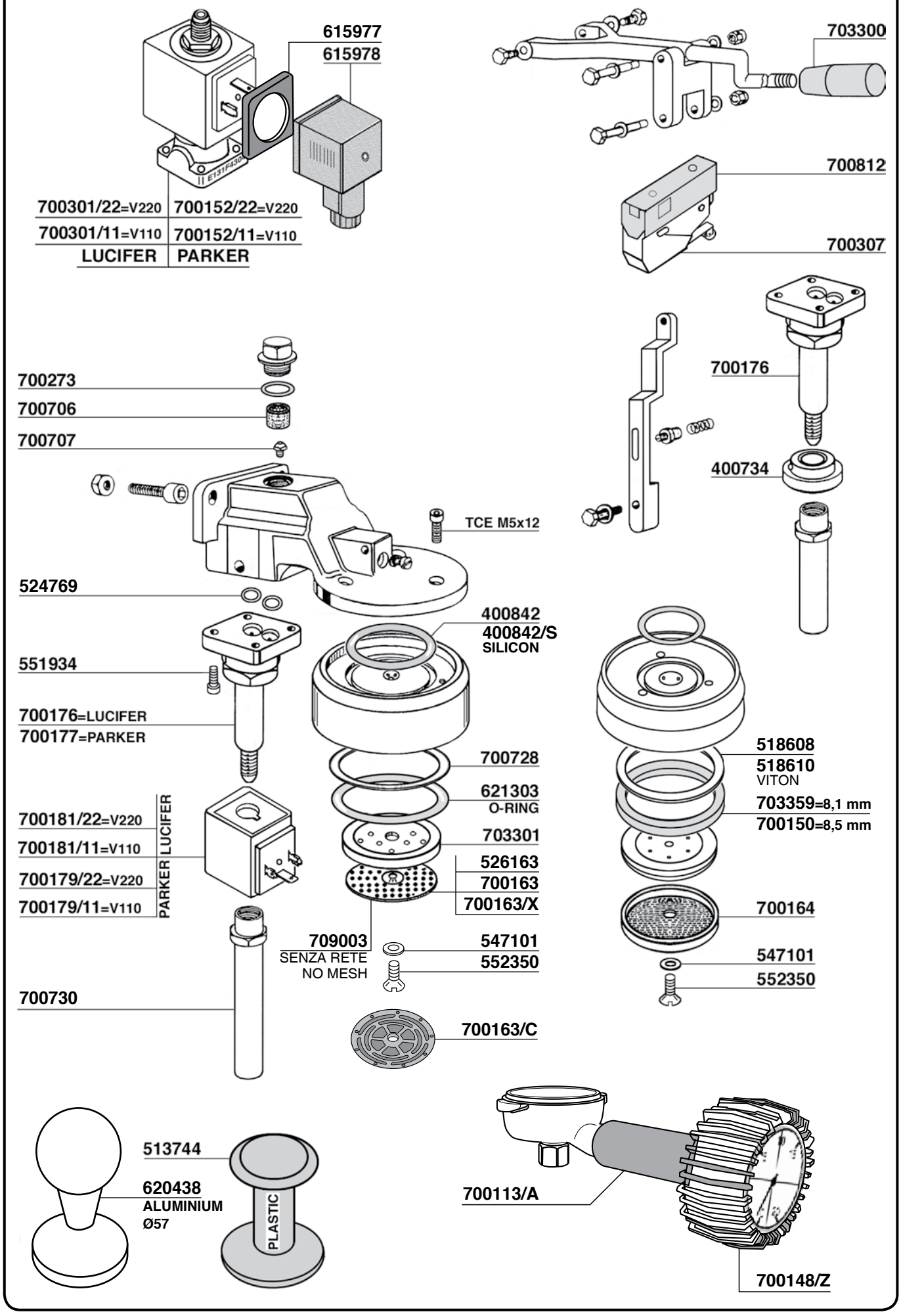

BEZZERA

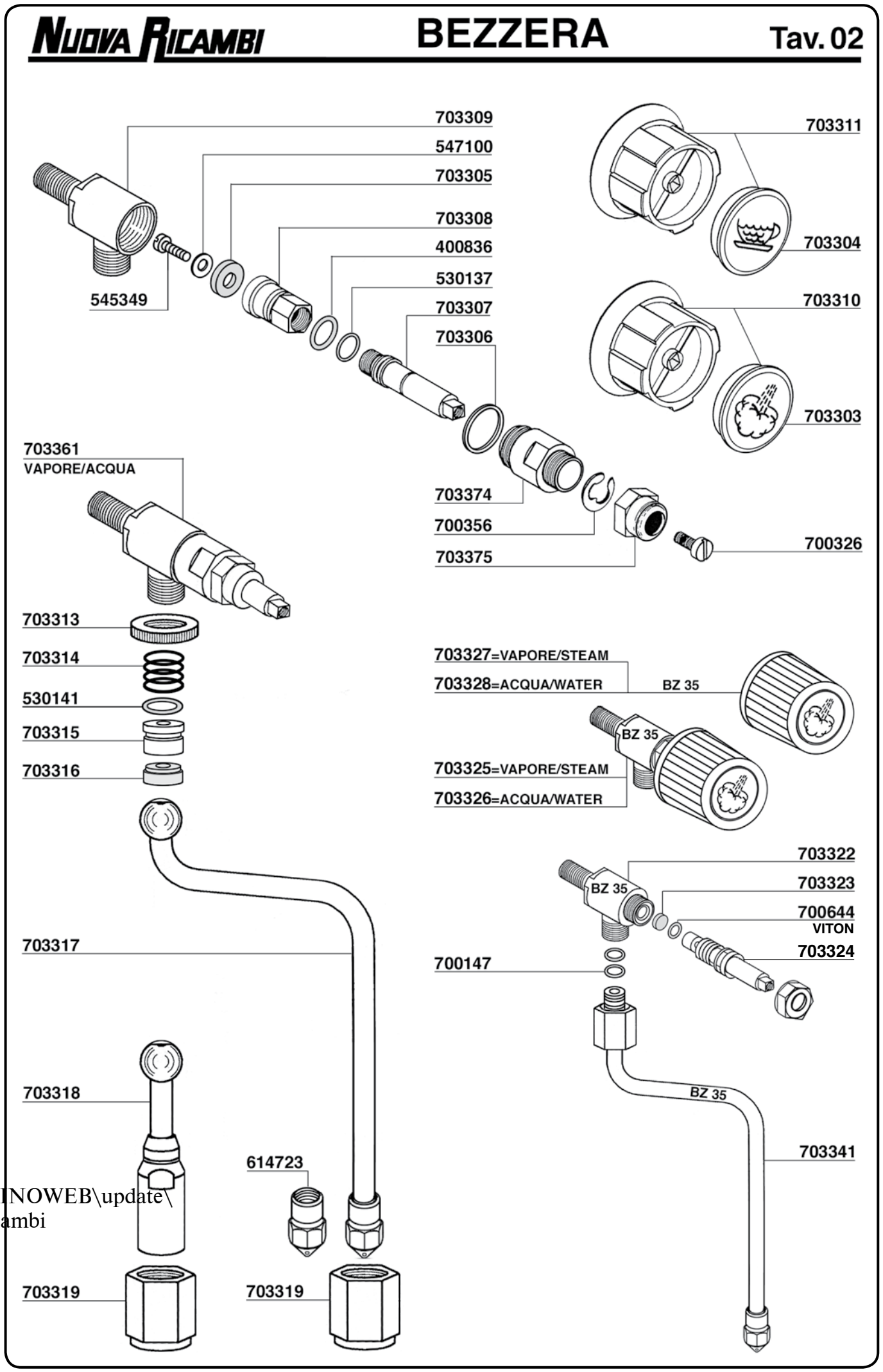

:\LISTINOWEB\update\
uovaricambi

NUOVA RICAMBI

BEZZERA

Tav. 03

ELLISSE

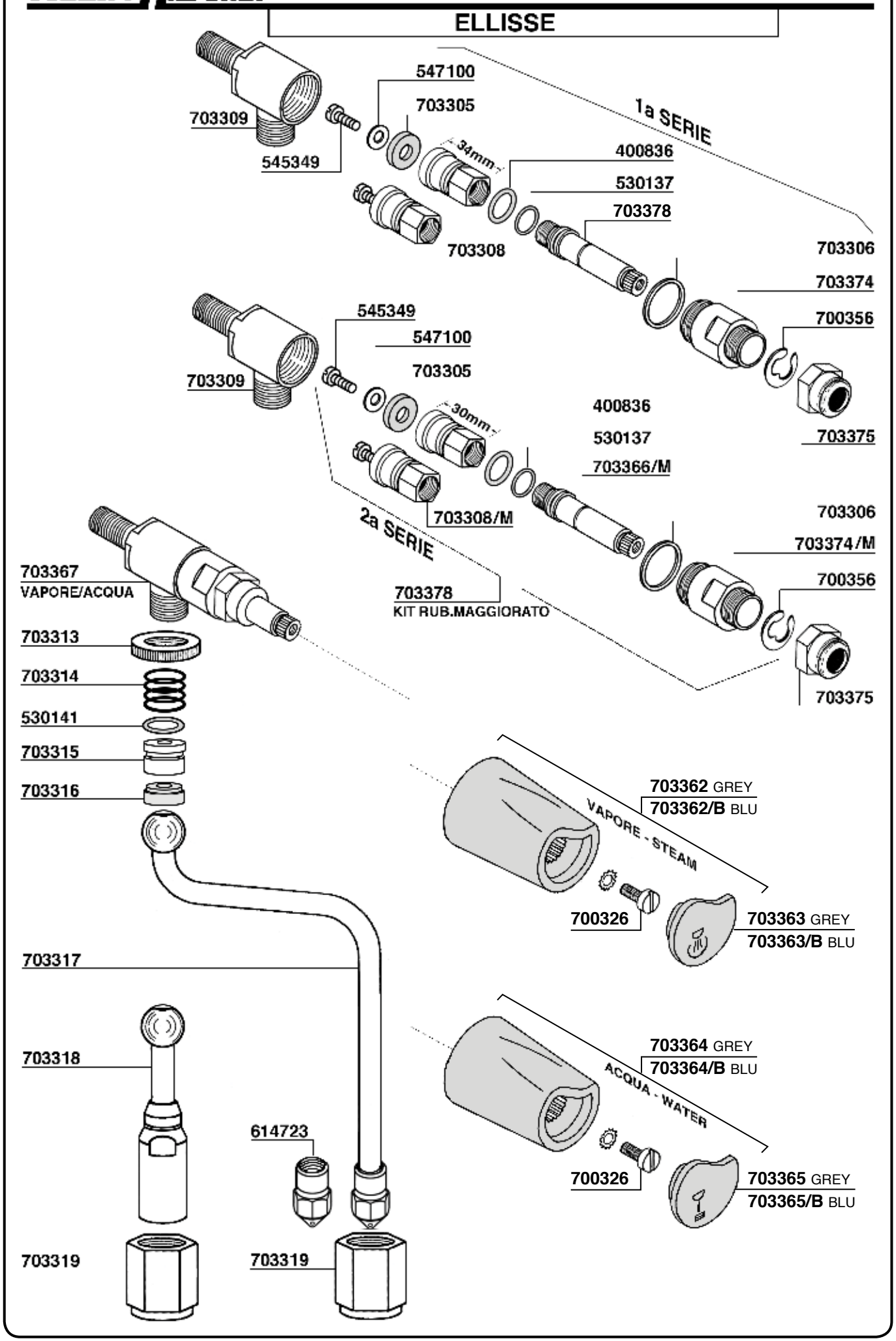

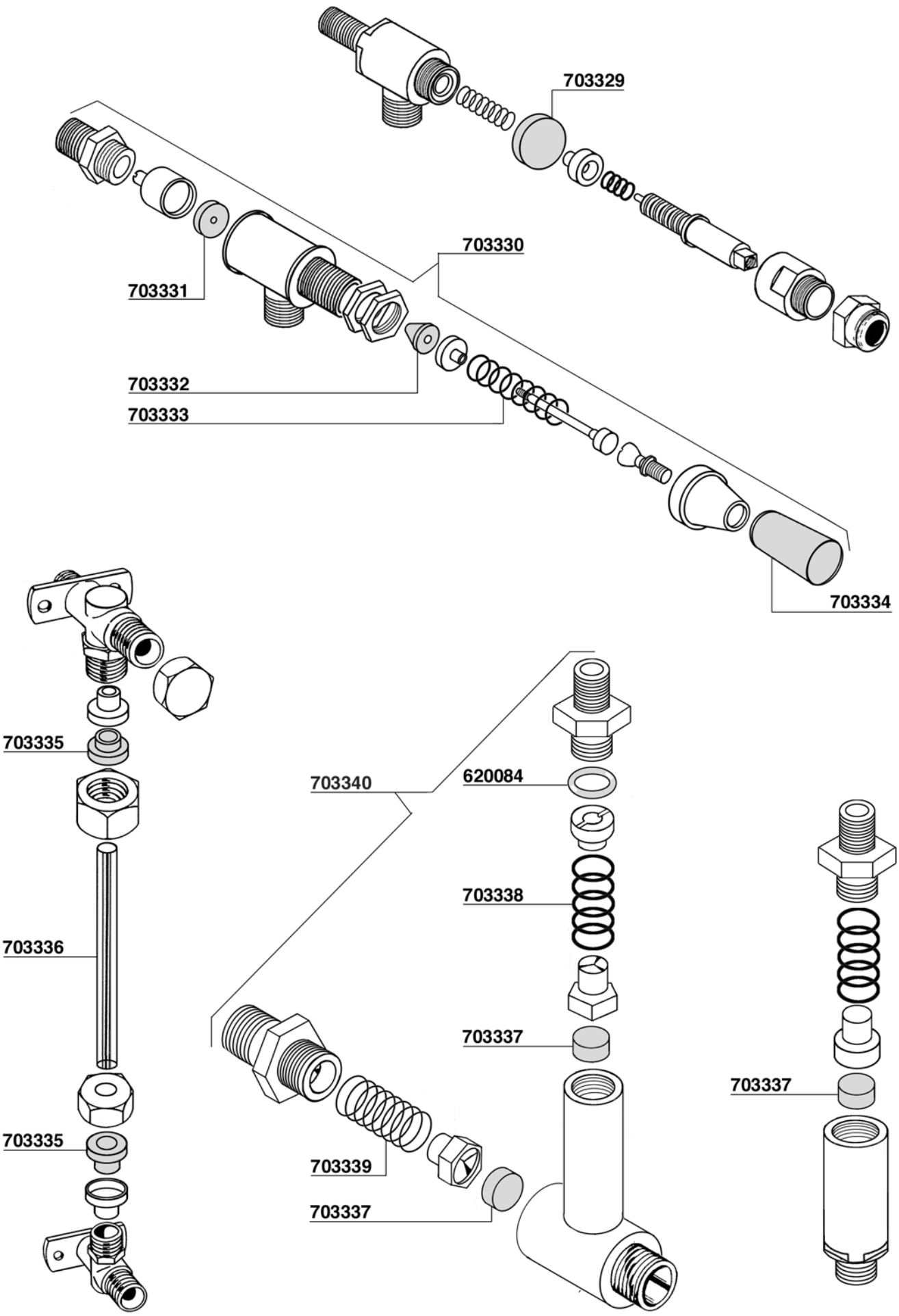
703329
703330
703331
703332
703333
703334
703335
703336
703335
703340
620084
703338
703337
703339
703337
703337

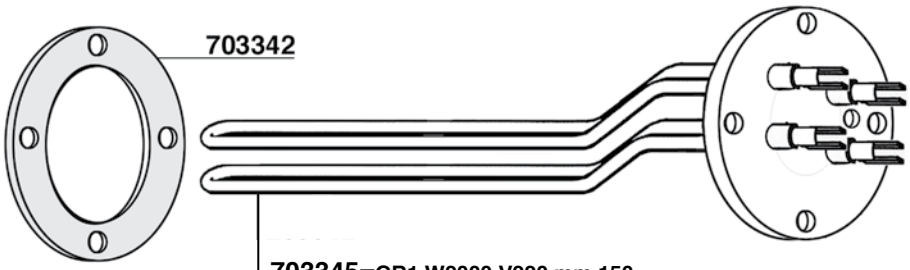

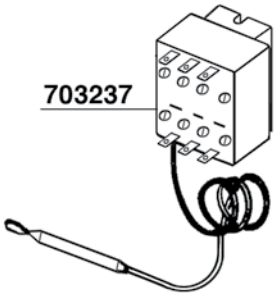

703345=GR1 W2000 V220 mm.150
703345/11=GR1 W1400 V110 INCOLOY mm.150
703346=GR2 W3500 V220 mm.340
703376=GR3 W5000 V220 mm.540

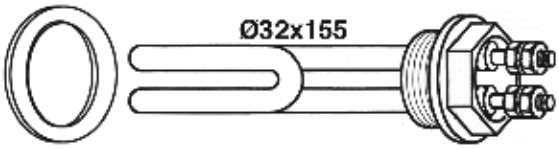

703348 =V220 W1350
703348/11 =V110 W1350

400826/T
TEFLON

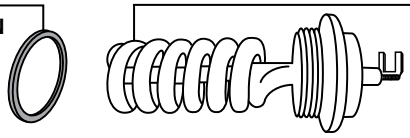

560083 = W1800 V220 mm.105

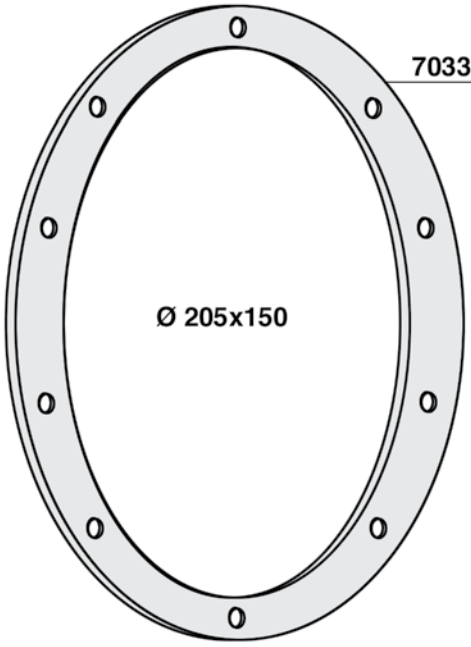

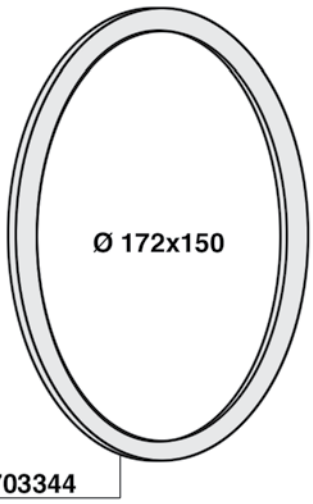

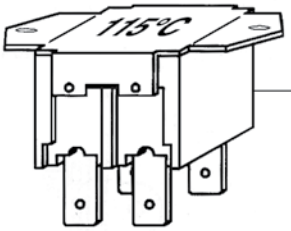

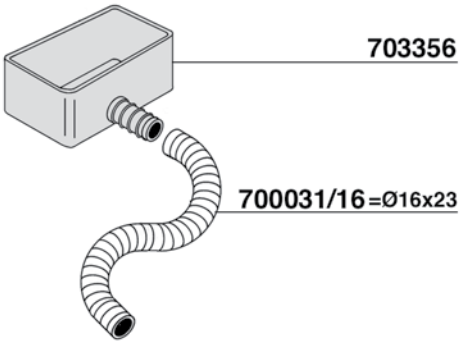

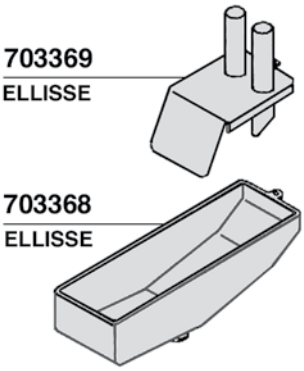

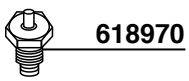

618970

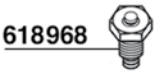

618968

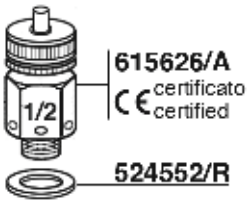

615626/A
CE certificato certified

524552/R

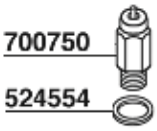

700750

524554

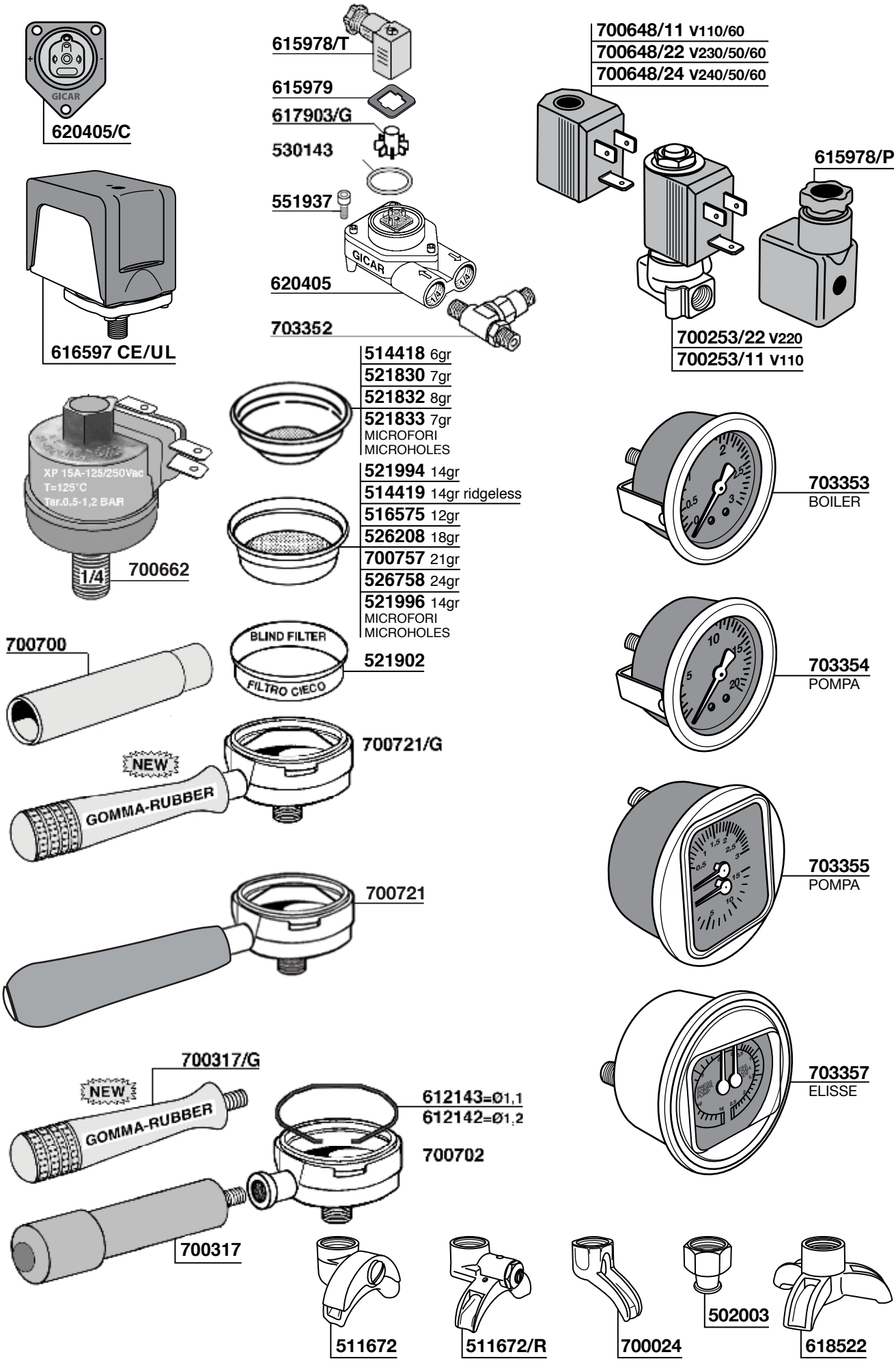
620405/C
616597 CE/UL
615978/T
615979
617903/G
530143
551937
620405
703352
700648/11 V110/60
700648/22 V230/50/60
700648/24 V240/50/60
615978/P
700253/22 V220
700253/11 V110
514418 6gr
521830 7gr
521832 8gr
521833 7gr
MICROFORI
MICROHOLES
521994 14gr
514419 14gr ridgeless
516575 12gr
526208 18gr
700757 21gr
526758 24gr
521996 14gr
MICROFORI
MICROHOLES
XP 15A-125/250Vac
T=125°C
Tar.0.5-1,2 BAR
1/4
700662
703353
BOILER
703354
POMPA
703355
POMPA
703357
ELISSE
700700
BLIND FILTER
FILTRO CIECO
521902
NEW
GOMMA-RUBBER
700721/G
700721
700317/G
612143=Ø1,1
612142=Ø1,2
700702
700317
511672
511672/R
700024
502003
618522

703371
Mod. DE

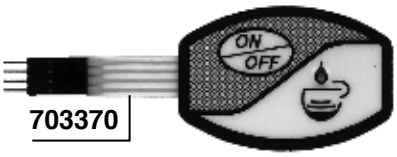

703370

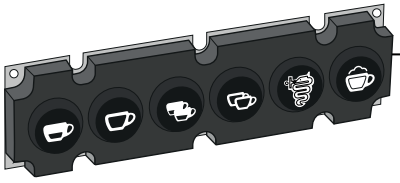

703386

703372

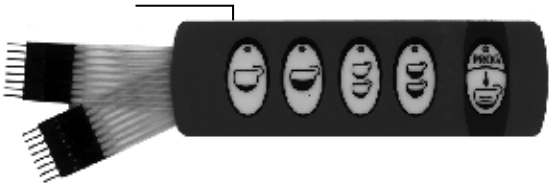

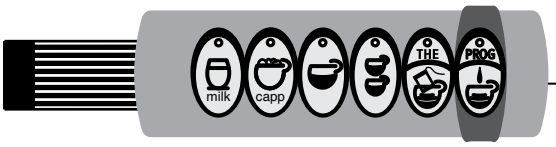

703381

703380

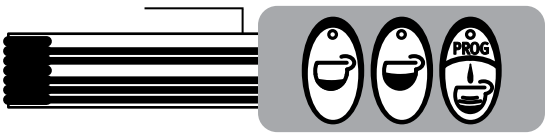

703373
Mod. TE

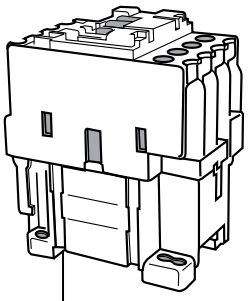

700930 220V
700931 110V

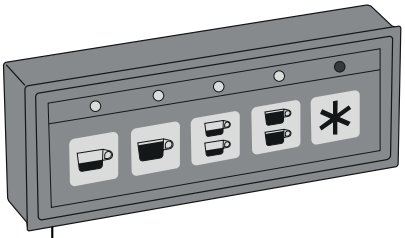

620737
GICAR CODE 9.9.12.00 G

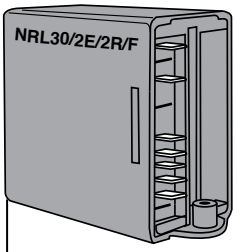

703382 230V
GICAR CODE 9.1.41.22 G 02

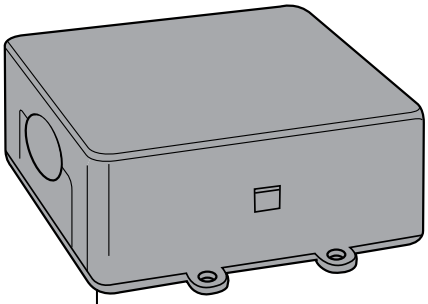

703377 ELLISSE GR1-2-3 220V
GICAR CODE 9.5.22.02 G 00

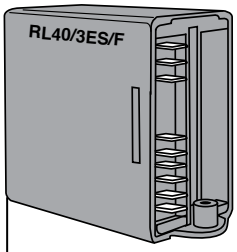

703312 220V
GICAR CODE 9.1.15.52 G
703312/11 110V
GICAR CODE 9.1.15.53 G

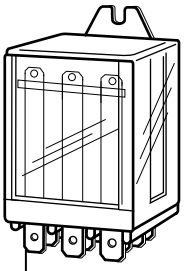

700652/22 220V

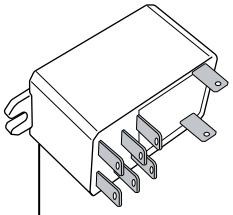

703385 240V

CAPPUCCINO
THERMOMETER
0 - 100 C°

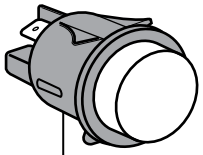

618010 RED
618010/V GREEN

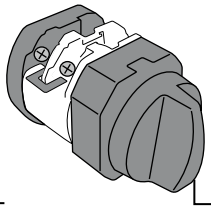

703350

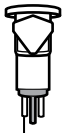

617729/22 220V

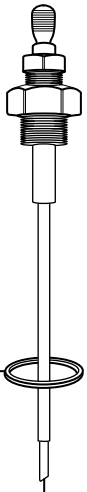

524554

612601 120mm
612601/L 140mm

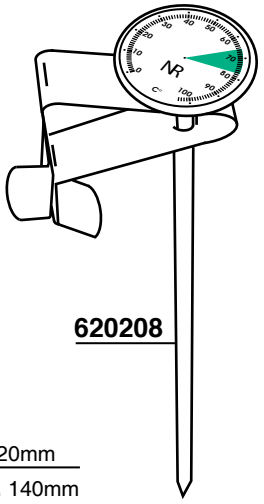

620208

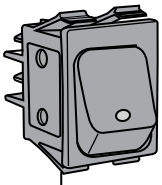

579671 BLACK

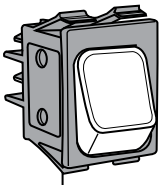

621080

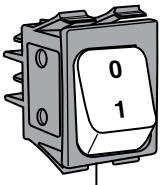

700382 ORANGE

BFC - ROYAL

Tav. 01

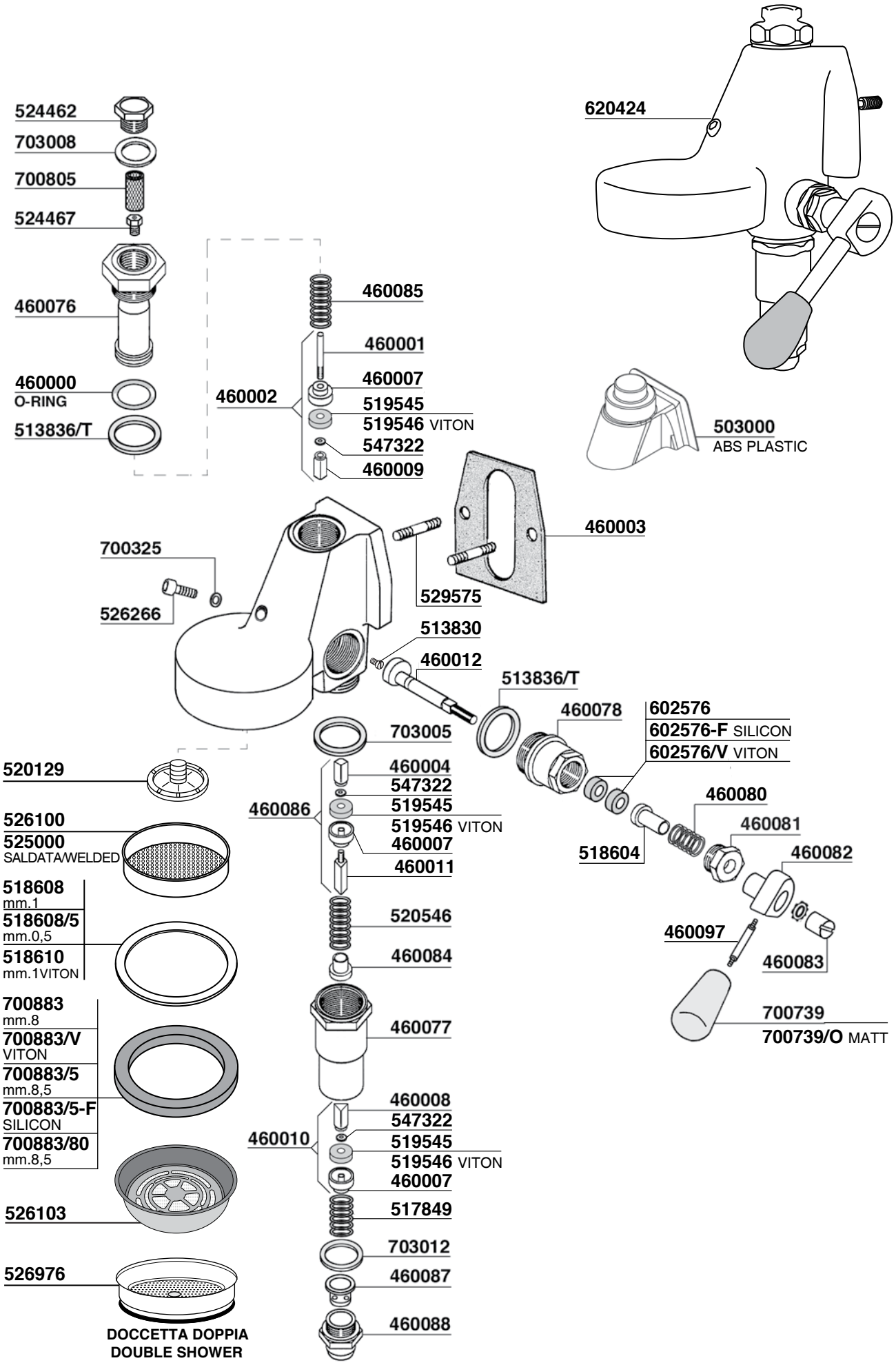

BFC - ROYAL

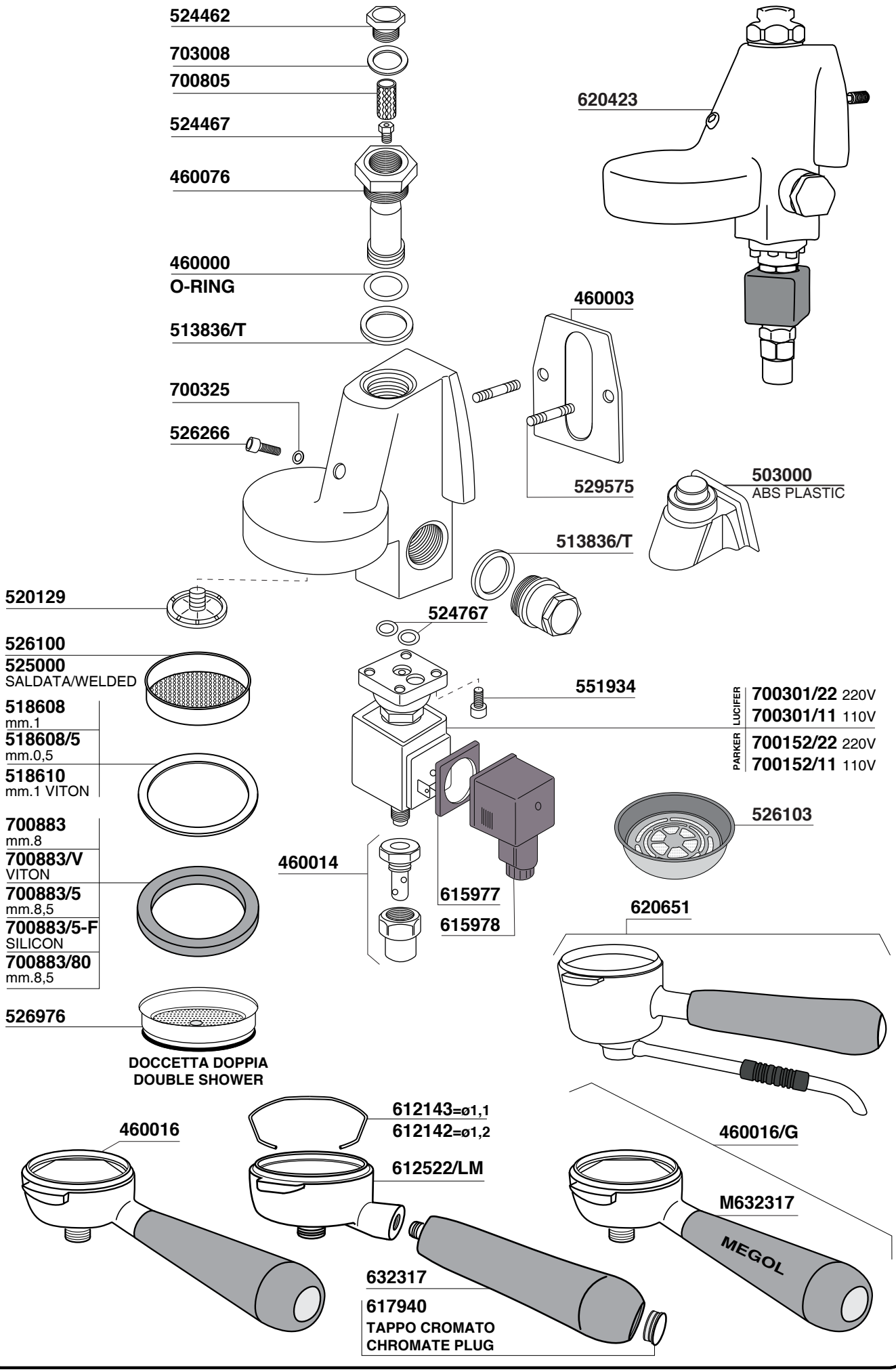
524462
703008
700805
524467
460076
460000
O-RING
513836/T
700325
526266
620423
460003
529575
503000
ABS PLASTIC
513836/T
520129
524767
526100
525000
SALDATA/WELDED
518608
mm.1
518608/5
mm.0,5
518610
mm.1 VITON
551934
LUCIFER
700301/22 220V
700301/11 110V
PARKER
700152/22 220V
700152/11 110V
526103
700883
mm.8
700883/V
VITON
700883/5
mm.8,5
700883/5-F
SILICON
700883/80
mm.8,5
460014
615977
615978
620651
526976
DOCCETTA DOPPIA
DOUBLE SHOWER
612143=ø1,1
612142=ø1,2
460016
612522/LM
460016/G
M632317
MEGOL
632317
617940
TAPPO CROMATO
CHROMATE PLUG

BFC-ROYAL

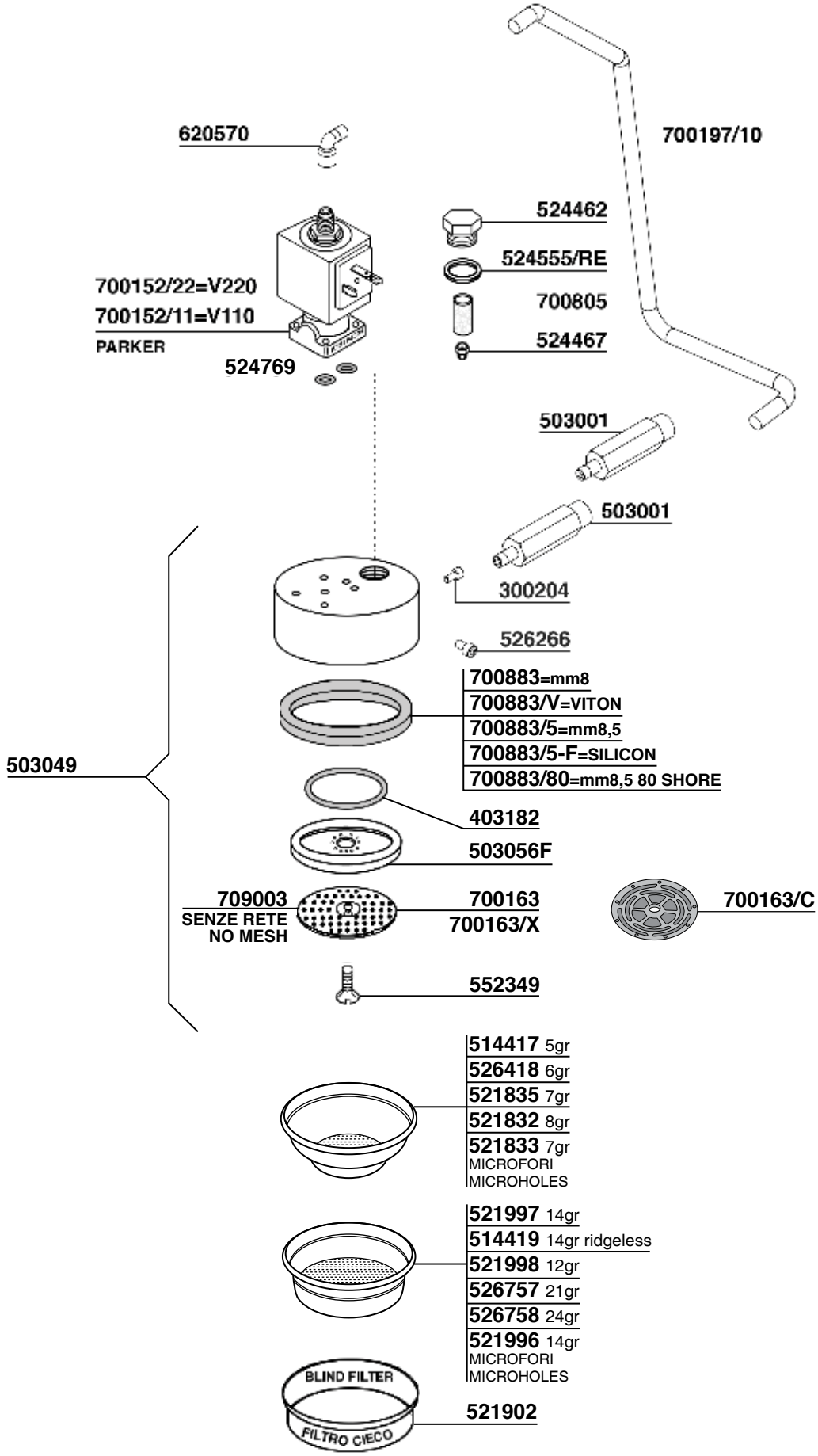
620570
700197/10
524462
524555/RE
700805
524467
700152/22=V220
700152/11=V110
PARKER
524769
503001
503001
300204
526266
700883=mm8
700883/V=VITON
700883/5=mm8,5
700883/5-F=SILICON
700883/80=mm8,5 80 SHORE
503049
403182
503056F
709003
SENZE RETE
NO MESH
700163
700163/X
700163/C
552349
514417 5gr
526418 6gr
521835 7gr
521832 8gr
521833 7gr
MICROFORI
MICROHOLES
521997 14gr
514419 14gr ridgeless
521998 12gr
526757 21gr
526758 24gr
521996 14gr
MICROFORI
MICROHOLES
BLIND FILTER
FILTRO CIECO
521902

BFC - ROYAL

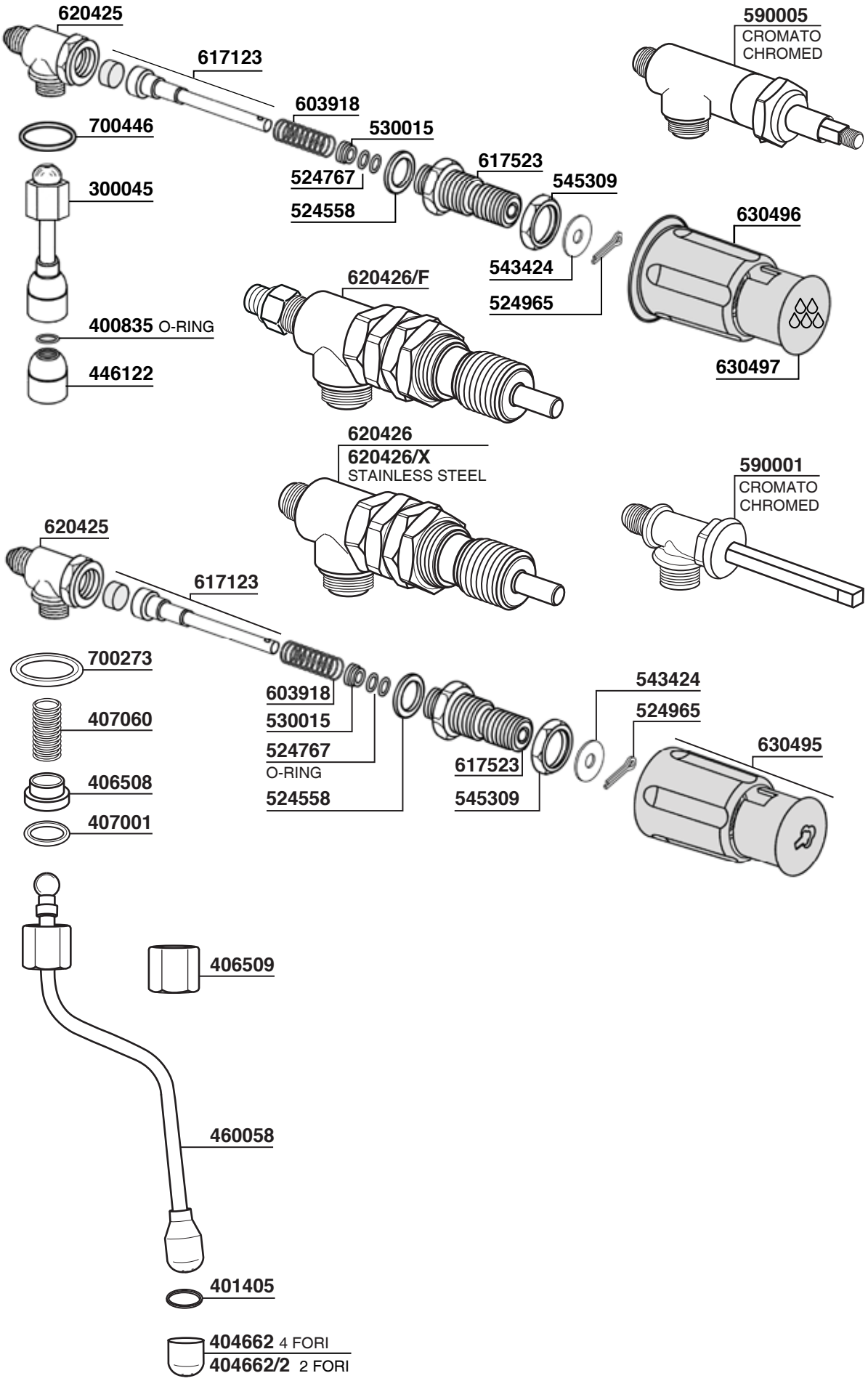
620425
617123
603918
530015
700446
524767
524558
617523
545309
590005
CROMATO
CHROMED
300045
630496
543424
524965
620426/F
400835 O-RING
446122
630497
620426
620426/X
STAINLESS STEEL
590001
CROMATO
CHROMED
620425
617123
700273
603918
530015
524767
O-RING
524558
543424
524965
407060
617523
545309
630495
406508
407001
406509
460058
401405
404662 4 FORI
404662/2 2 FORI

BFC - ROYAL

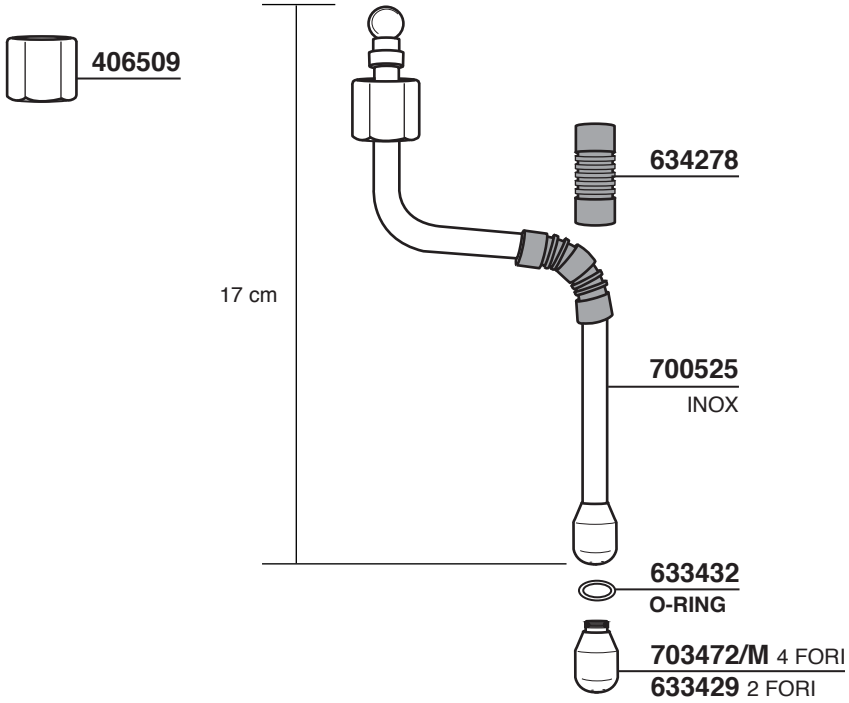
406509
634278
17 cm
700525
INOX
633432
O-RING
703472/M 4 FORI
633429 2 FORI

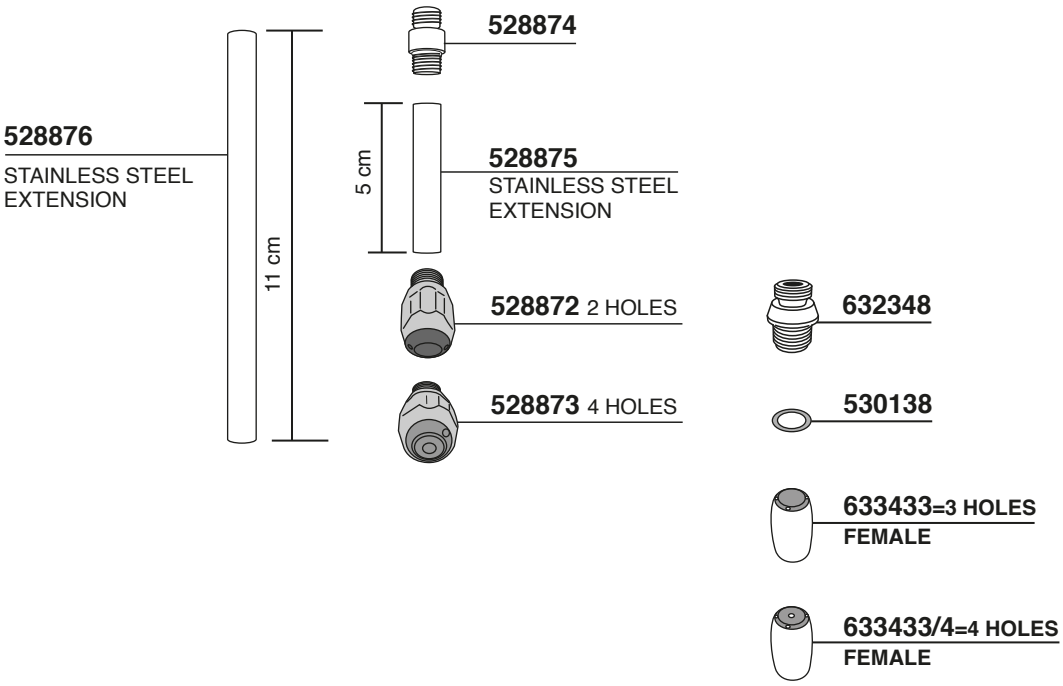
528874
528876
STAINLESS STEEL
EXTENSION
5 cm
528875
STAINLESS STEEL
EXTENSION
11 cm
528872 2 HOLES
632348
528873 4 HOLES
530138
633433=3 HOLES
FEMALE
633433/4=4 HOLES
FEMALE

BFC - ROYAL

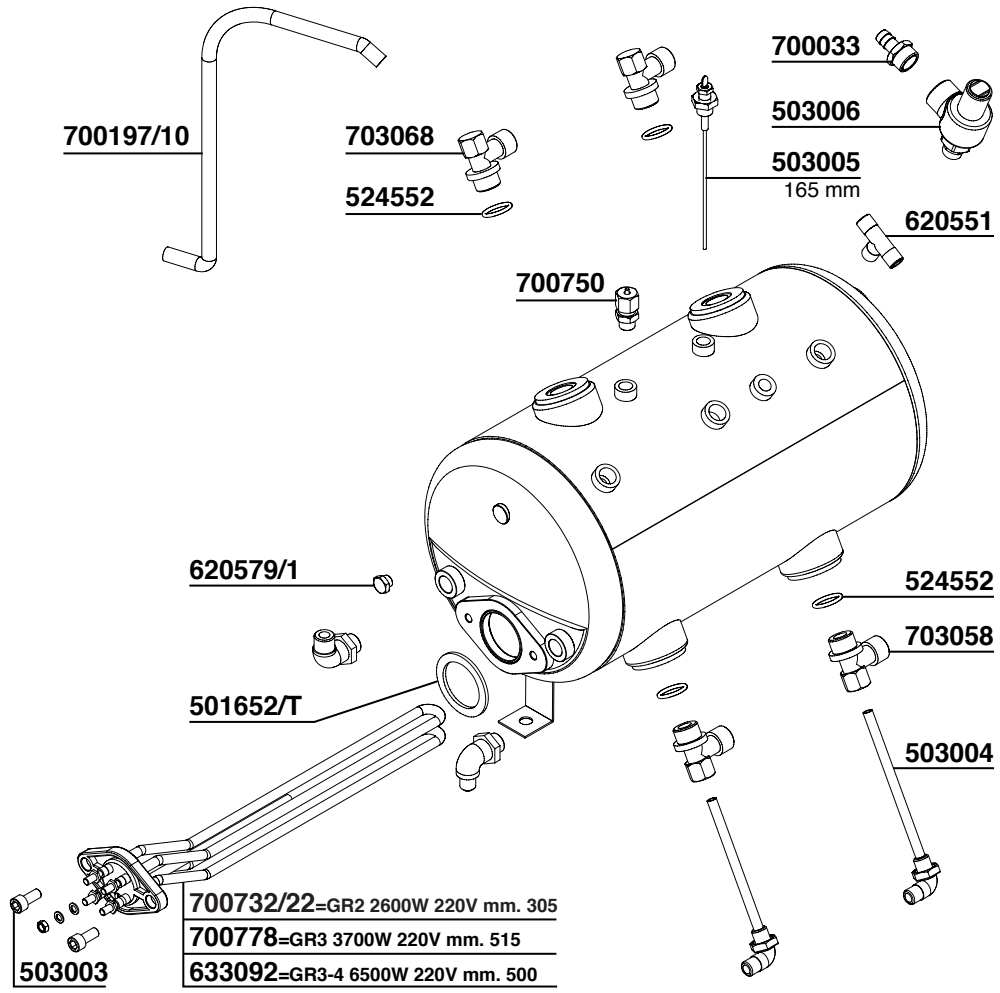
700033
503006
700197/10
703068
503005
165 mm
524552
620551
700750
620579/1
524552
703058
501652/T
503004
700732/22=GR2 2600W 220V mm. 305
700778=GR3 3700W 220V mm. 515
503003
633092=GR3-4 6500W 220V mm. 500

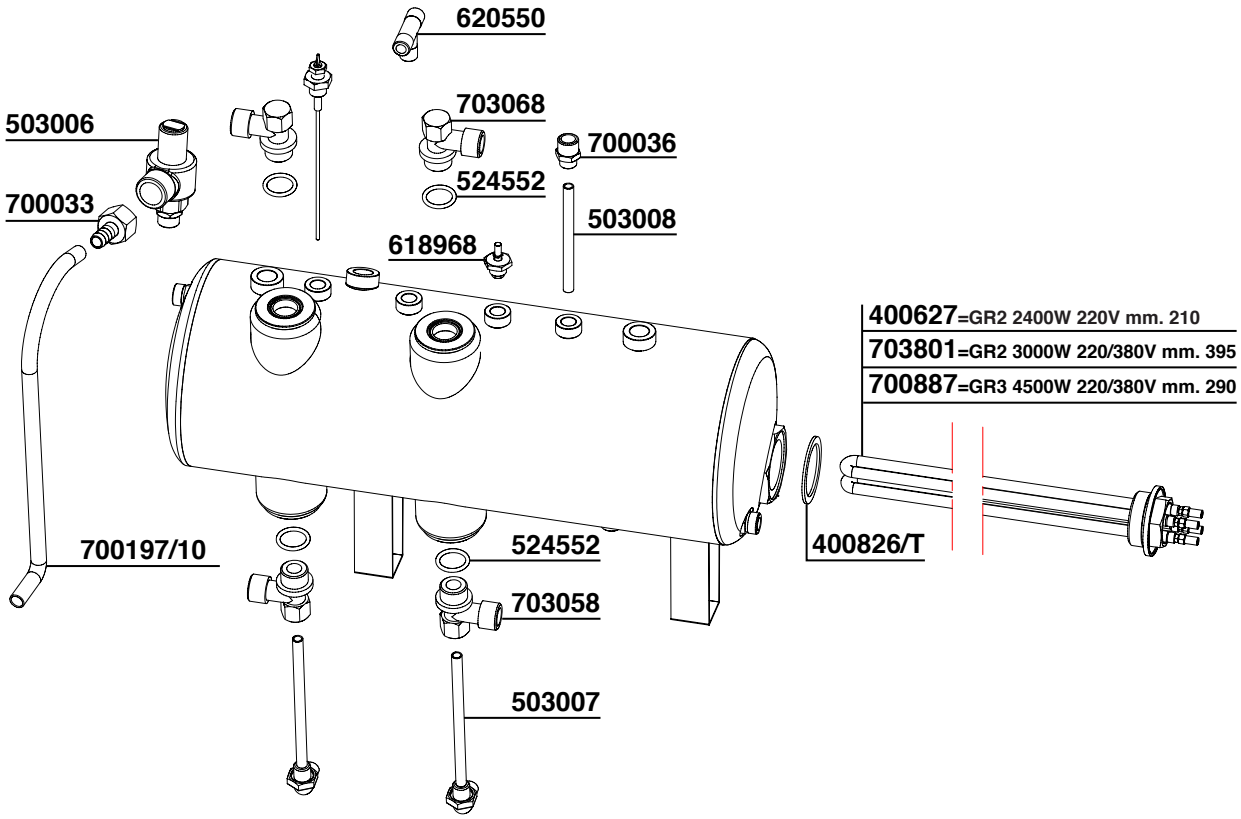
620550
503006
703068
700036
700033
524552
503008
618968
400627=GR2 2400W 220V mm. 210
703801=GR2 3000W 220/380V mm. 395
700887=GR3 4500W 220/380V mm. 290
700197/10
524552
400826/T
703058
503007

BFC - ROYAL

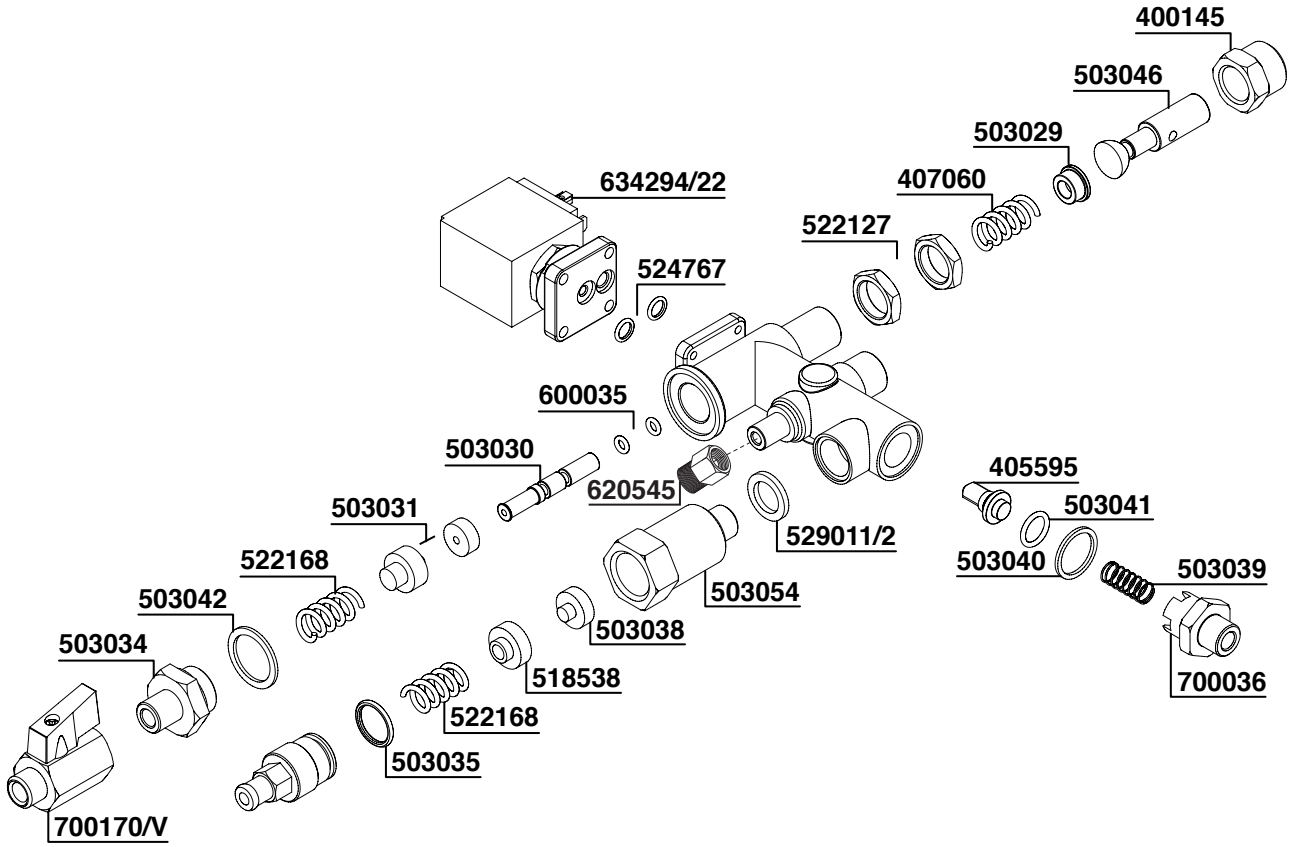
400145
503046
503029
407060
522127
634294/22
524767
600035
503030
620545
405595
503041
503031
529011/2
503040
503039
522168
503054
503042
503038
503034
518538
700036
522168
503035
700170/V

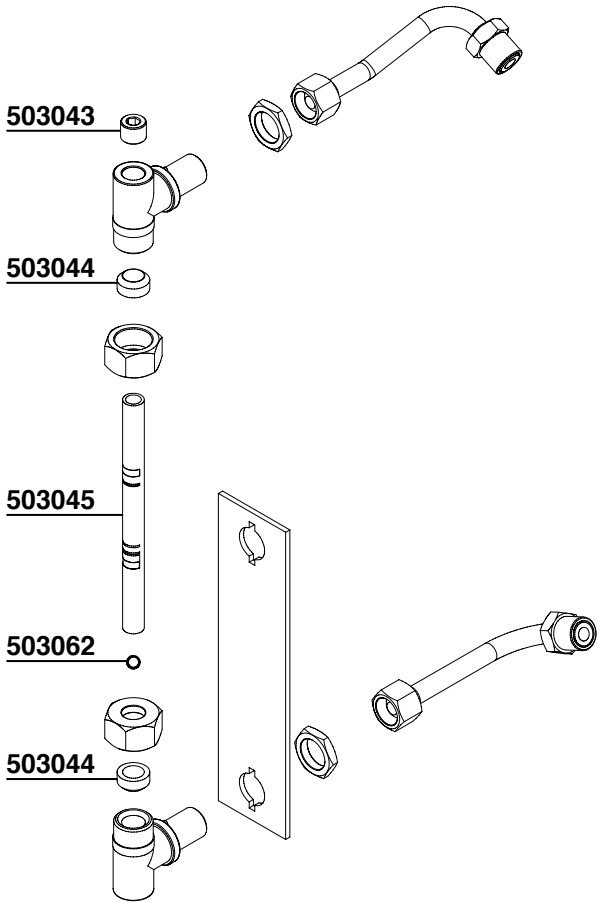
503043
503044
503045
503062
503044

BFC - ROYAL

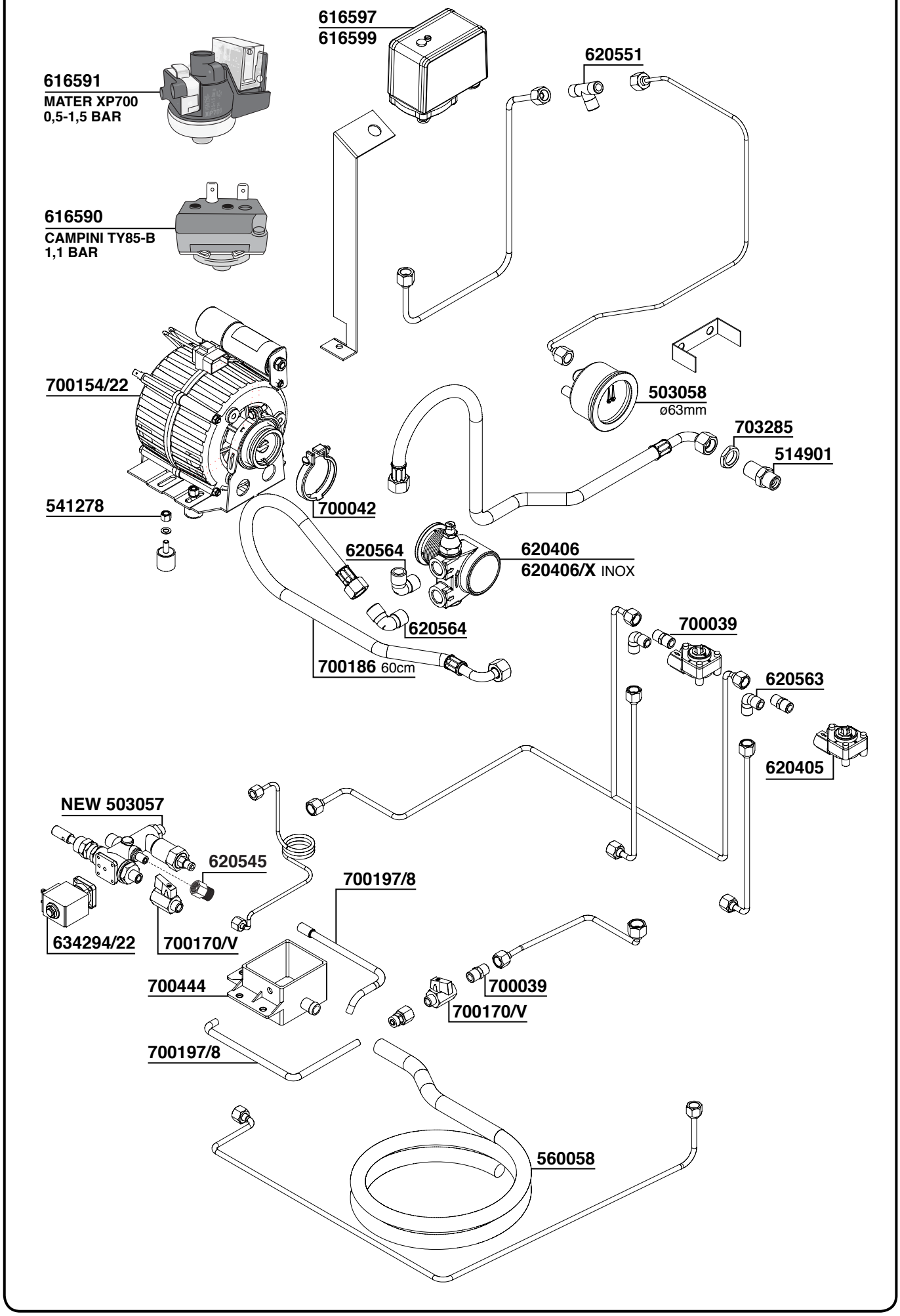
616597
616599
620551
616591
MATER XP700
0,5-1,5 BAR
616590
CAMPINI TY85-B
1,1 BAR
700154/22
503058
ø63mm
703285
514901
541278
700042
620564
620406
620406/X INOX
620564
700039
700186 60cm
620563
620405
NEW 503057
620545
700197/8
634294/22
700170/V
700444
700039
700170/V
700197/8
560058

BFC - ROYAL

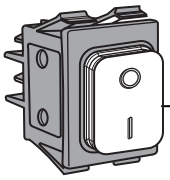

503048

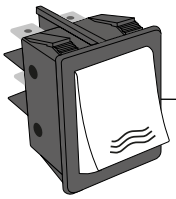

618013

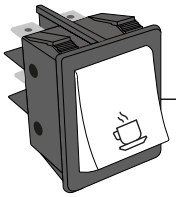

618011

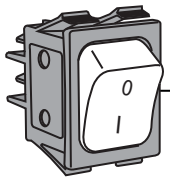

700429

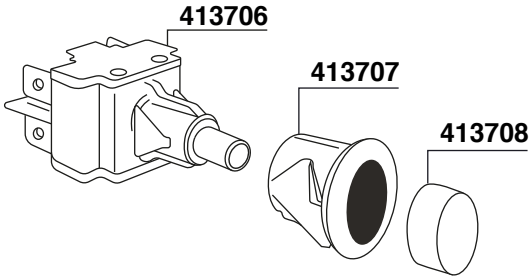

413706

413707

413708

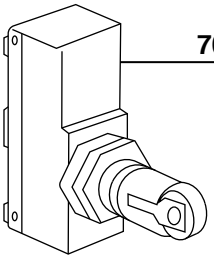

703000

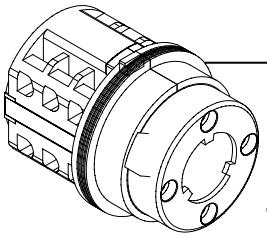

503014 20AMP
503047 32AMP

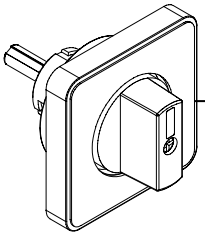

503015
CLASSICA
DELUX
DIADEMA
DOGARESSA
GRANDOGE
IMOLA
MARANELLO
MONZA
VALLELUNGA

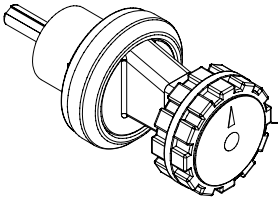

503016
LIRA

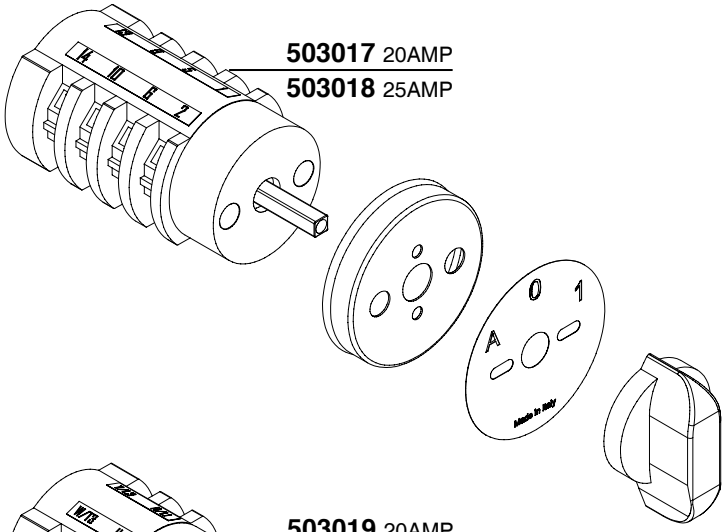

503017 20AMP
503018 25AMP

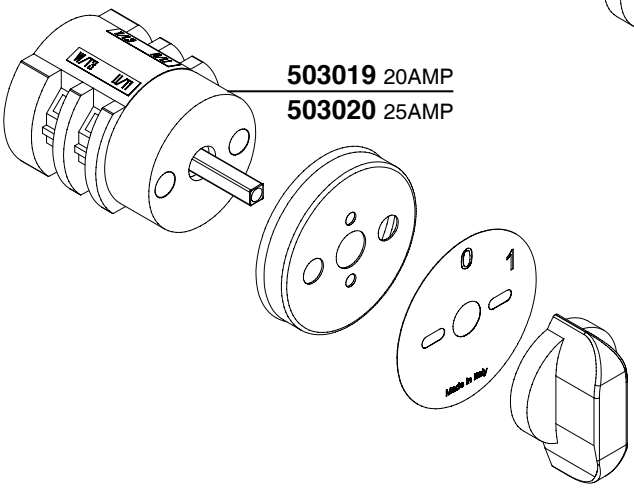

503019 20AMP
503020 25AMP

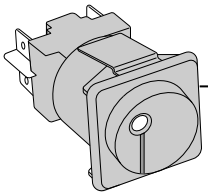

630381
IMPERO, MONZA-IMOLA-
MARANELLO, MONZA-K
ANTEA, GRANDOGE
DOGARESSA, CLASSICA

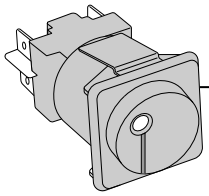

503051
SYNCHRO, DE LUX
VALLELUNGA, LIRA, LIRA-S
OPERA, CLASSICA EVA

BFC - ROYAL

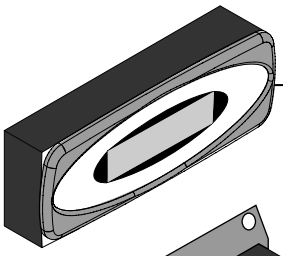

503021
GICAR CODE 9.5.31.12G
DE LUX OLD

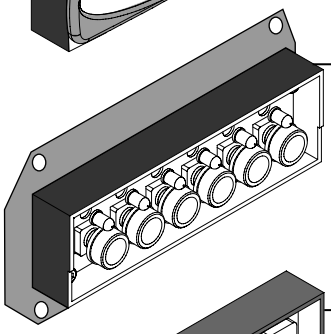

503022
MONZA
IMOLA
MARANELLO
DE LUX

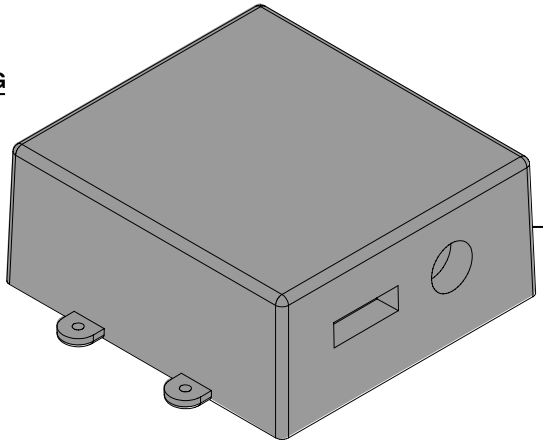

503010
ANTEA
CLASSICA
DIADEMA
DOGARESSA
GRANDOGE
TETIDE

503011
DE LUX
IMOLA
LIRA
MARANELLO
MONZA
SYNCRO
VALLELUNGA

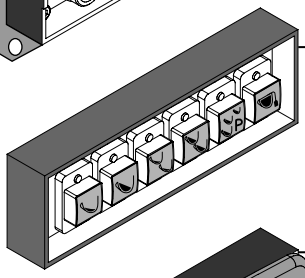

503023
GICAR CODE 9.9.07.20G
VALLELUNGA

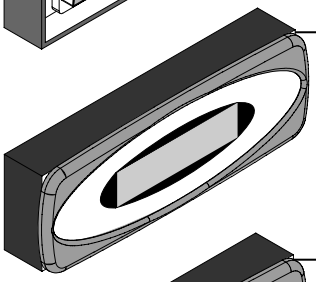

503024
GICAR CODE 9.5.13.78G
LIRA

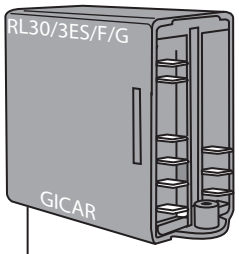

503050
GICAR CODE 9.1.29.05G00

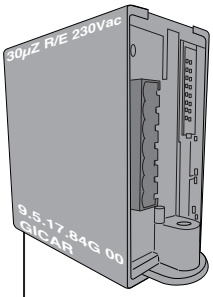

503053
GICAR CODE 9.5.17.84G00

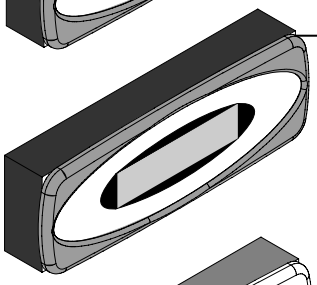

503059
GICAR CODE 9.5.31.56G
DE LUX
MONZA
MONZA K

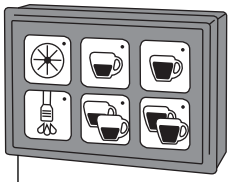

620705
GICAR CODE 9.9.09.28

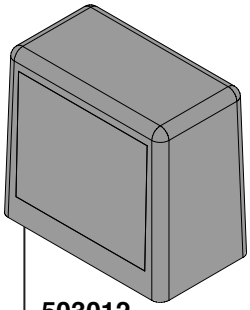

503012
GICAR CODE 9.9.04.20G
DIADEMA / DOGARESSA
IMOLA / MONZA / SYNCRO
TETIDE / VALLELUNGA

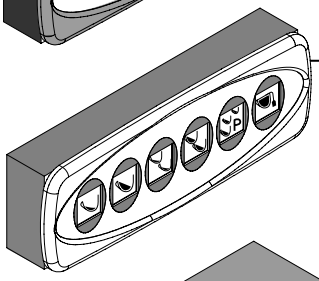

503025
GICAR CODE 9.9.07.75G
LIRA

620748
GICAR CODE 8.9.48.76

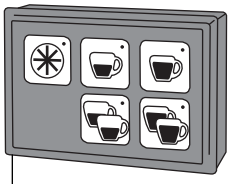

503026
GRANDOGE

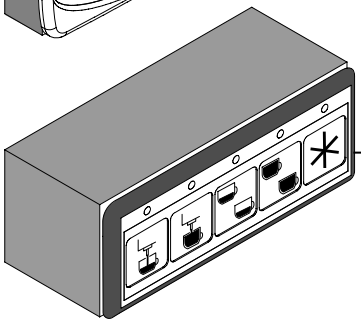

503013
DIADEMA

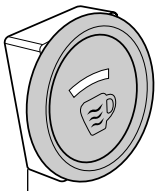

503027

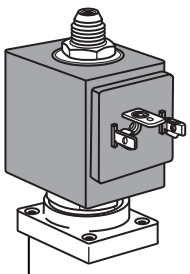

700152/22

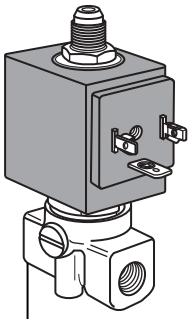

300065

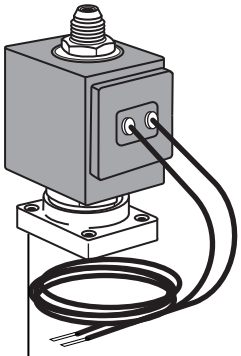

576288/22

BRASILIA

GRUPPO BE

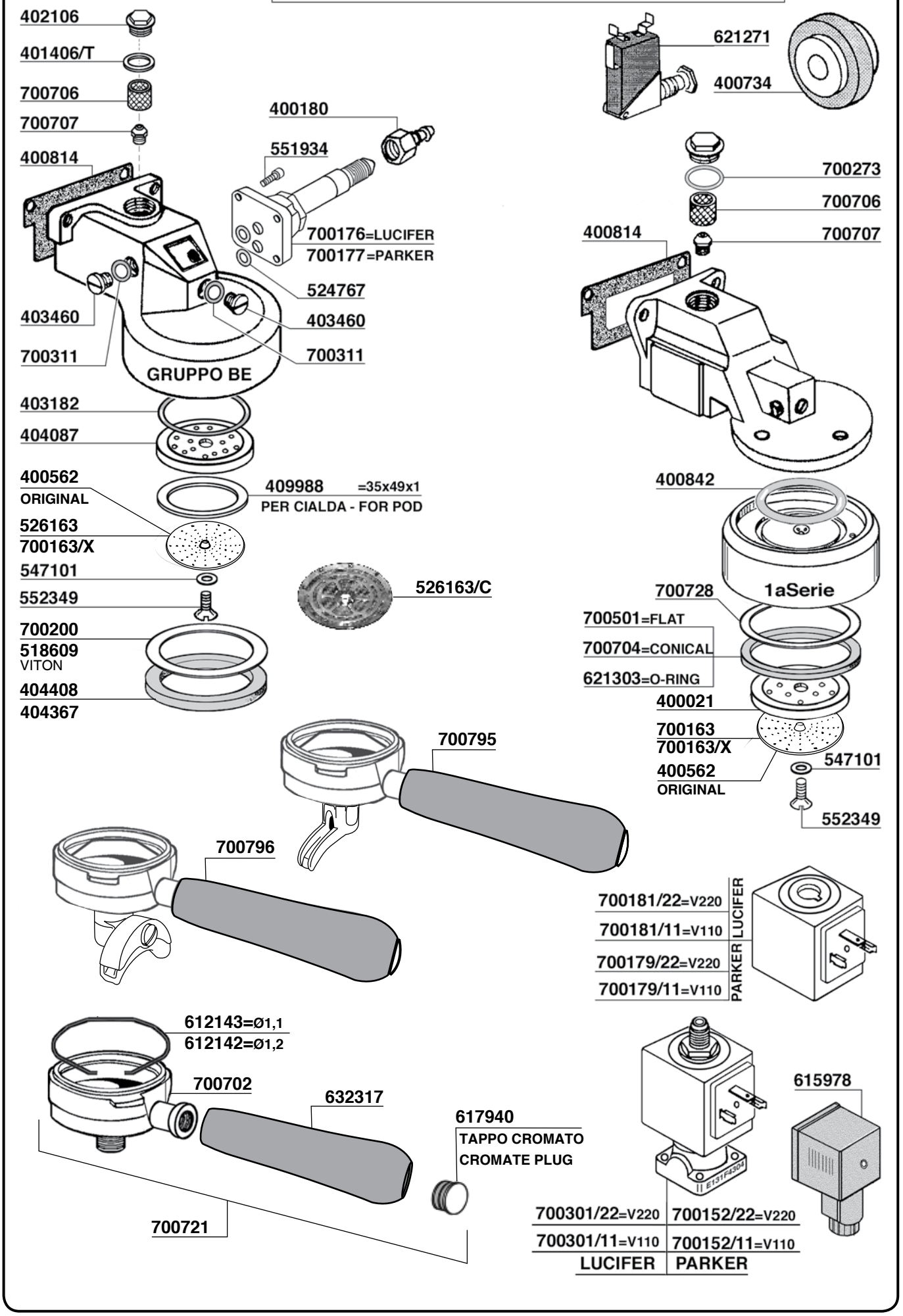

BRASILIA

GRUPPO B61

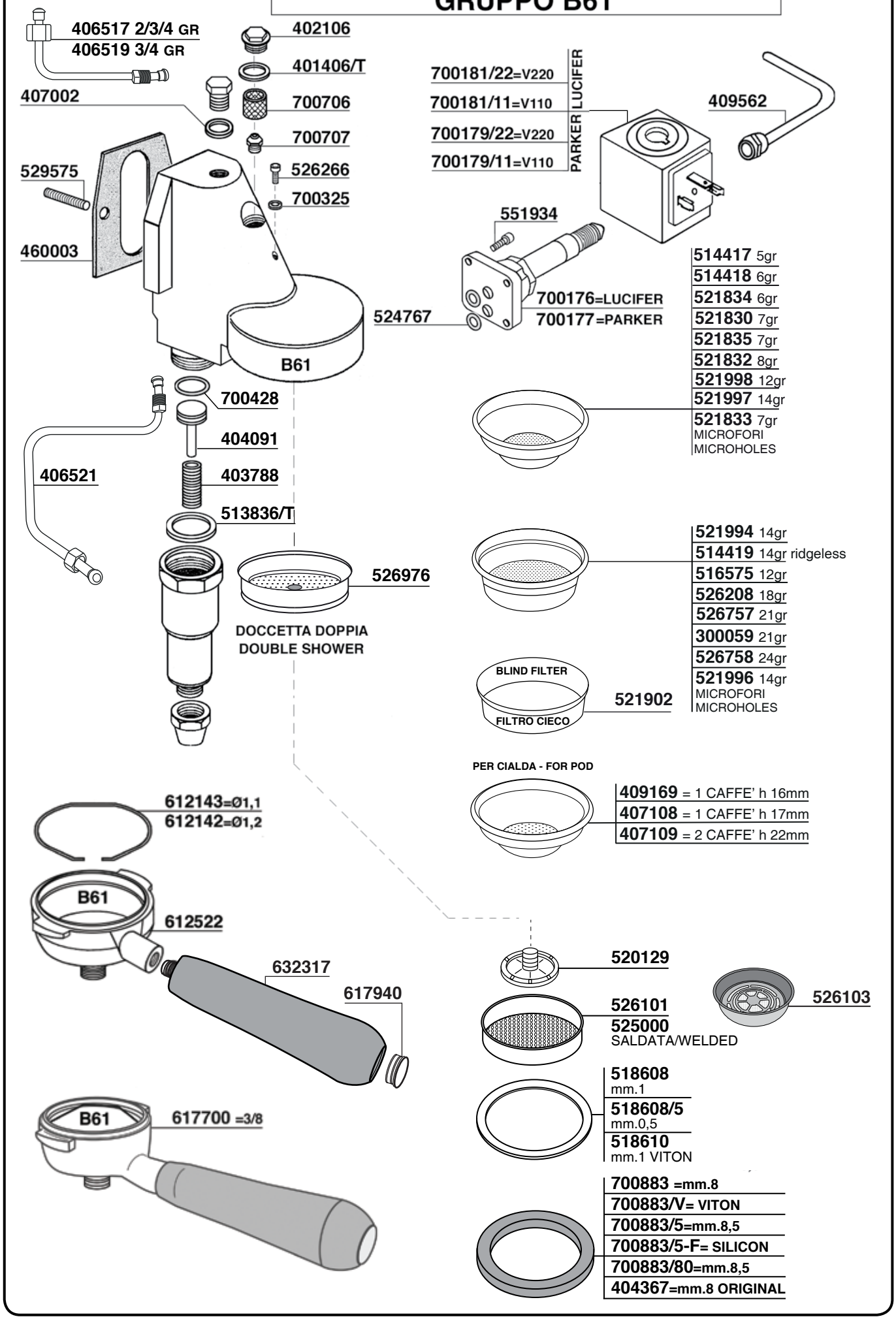

BRASILIA

GRUPPO LEVA

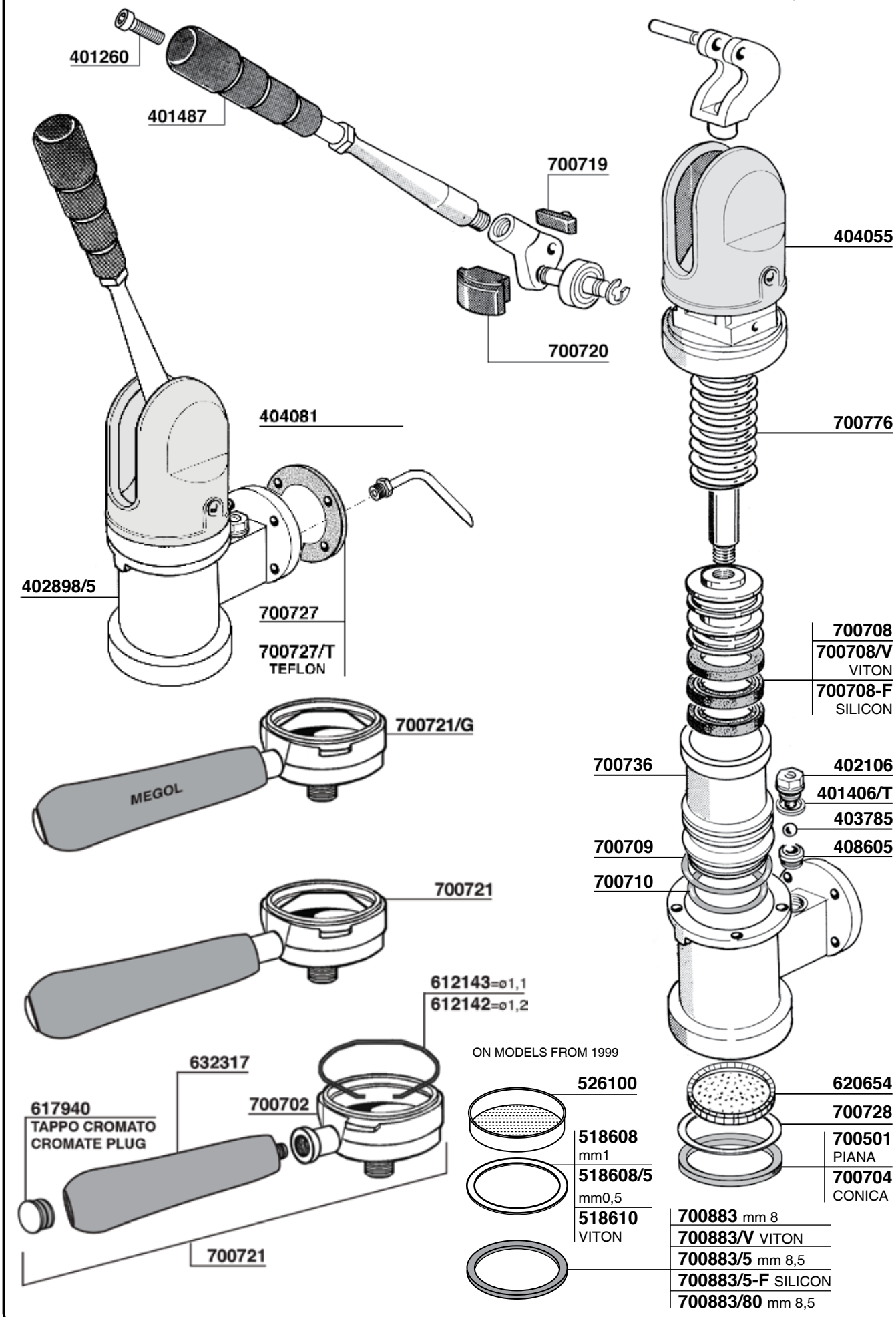

BRASILIA

RUBINETTI BAR-AMERICA

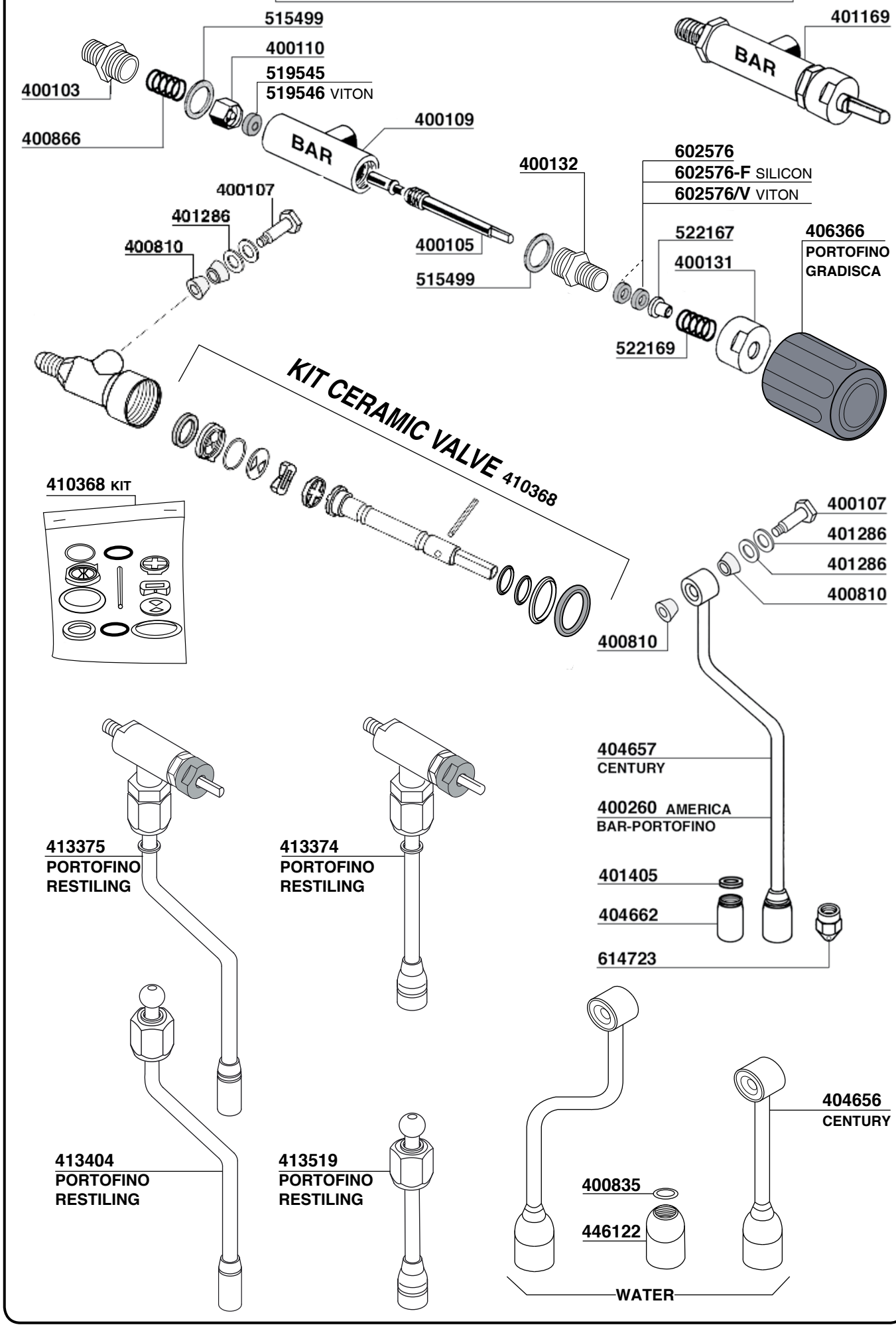

BRASILIA

RUBINETTI

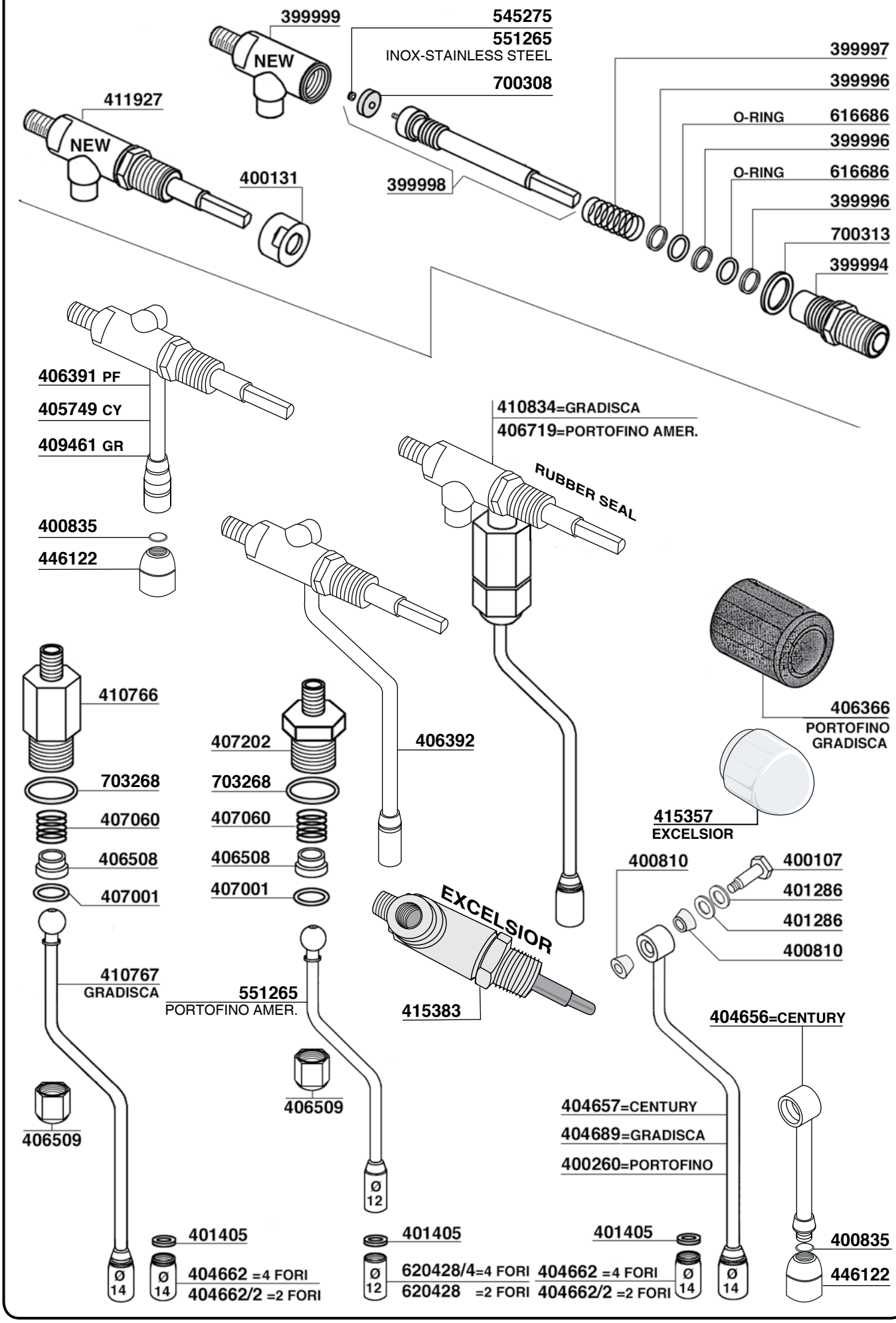

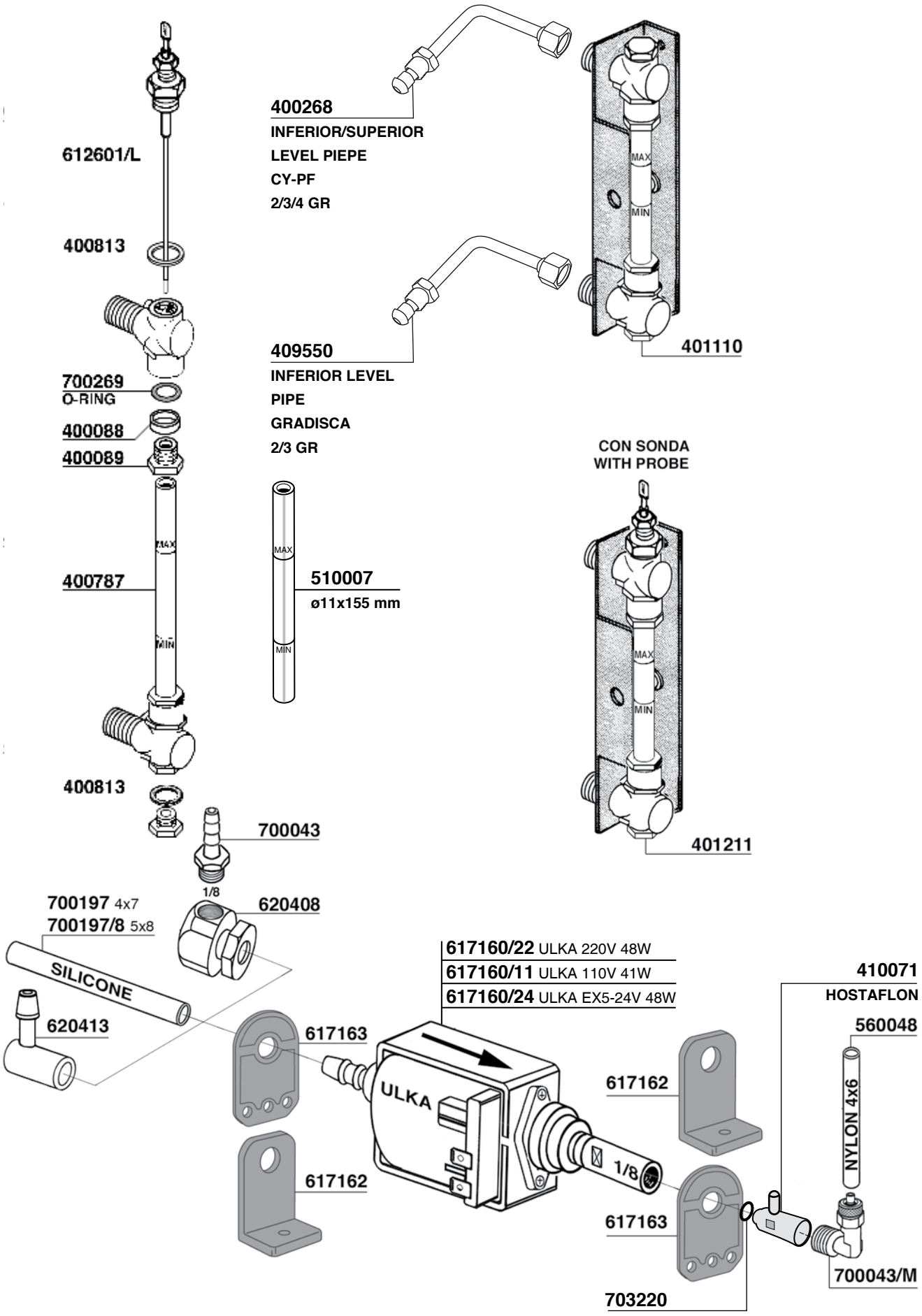
612601/L
400813
700269
O-RING
400088
400089
400787
MAX
MIN
400813
700043
1/8
620408
700197 4x7
700197/8 5x8
SILICONE
620413
400268
INFERIOR/SUPERIOR
LEVEL PIEPE
CY-PF
2/3/4 GR
409550
INFERIOR LEVEL
PIPE
GRADISCA
2/3 GR
510007
ø11x155 mm
401110
CON SONDA
WITH PROBE
401211
617160/22 ULKA 220V 48W
617160/11 ULKA 110V 41W
617160/24 ULKA EX5-24V 48W
617163
617162
ULKA
1/8
410071
HOSTAFLON
560048
NYLON 4x6
700043/M
703220

BRASILIA

CLUB - LADY

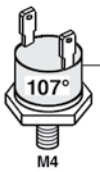

619293

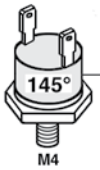

617991/G

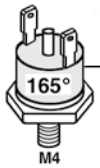

618964
MANUAL RESETTING

STEAM MICROPUMP

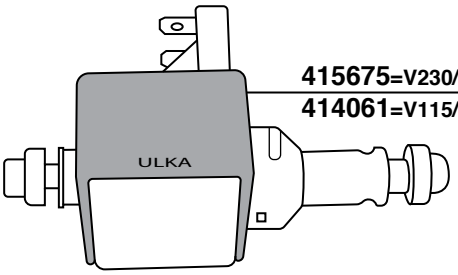

415675=V230/50
414061=V115/60

WATERLINE INDICATOR

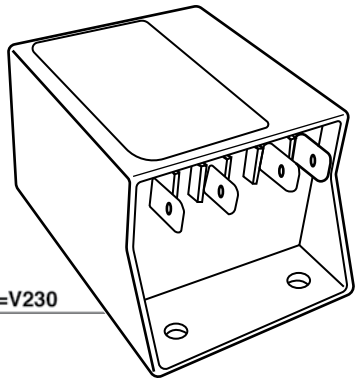

401878 =V230

400825

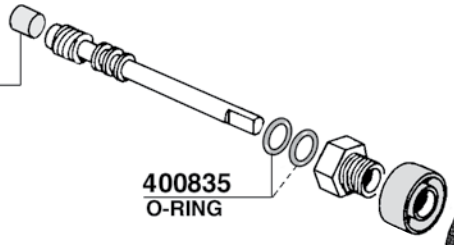

400835
O-RING

406366

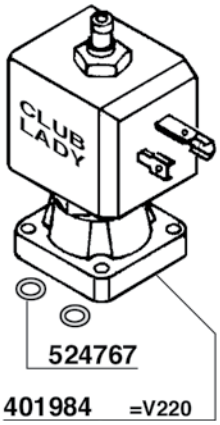

524767

401984 =V220

411443

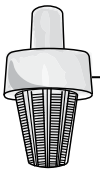

408818

CLUB - LADY

400836
O-RING

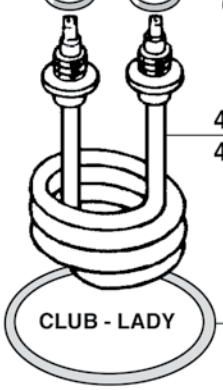

400625 =W1200 V230
400626 =W1200 V115

530131
O-RING BOILER

401547
PIPE PUMP-
BOILER CLUB-LADY

400651

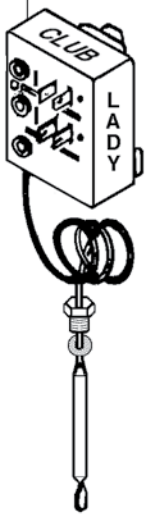

409207

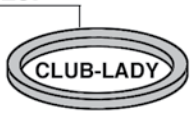

FILTER HOLDER GASKET

CLUB

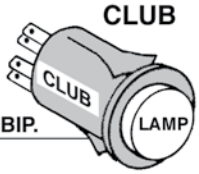

618010 V230 BIP.
SWITCH

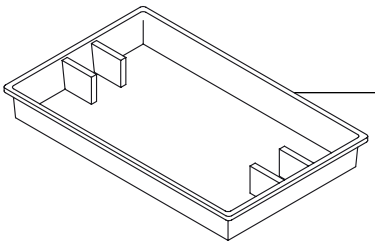

400776
DISCHARGE TANK
CLUB-LADY

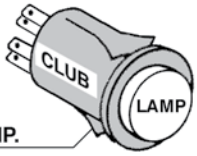

400660 V230 BIP.
PUSH BUTTON

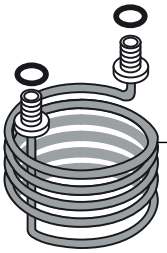

410432
HEATING ELEMENT
1000W 230V M10X1
CLUB-LADY

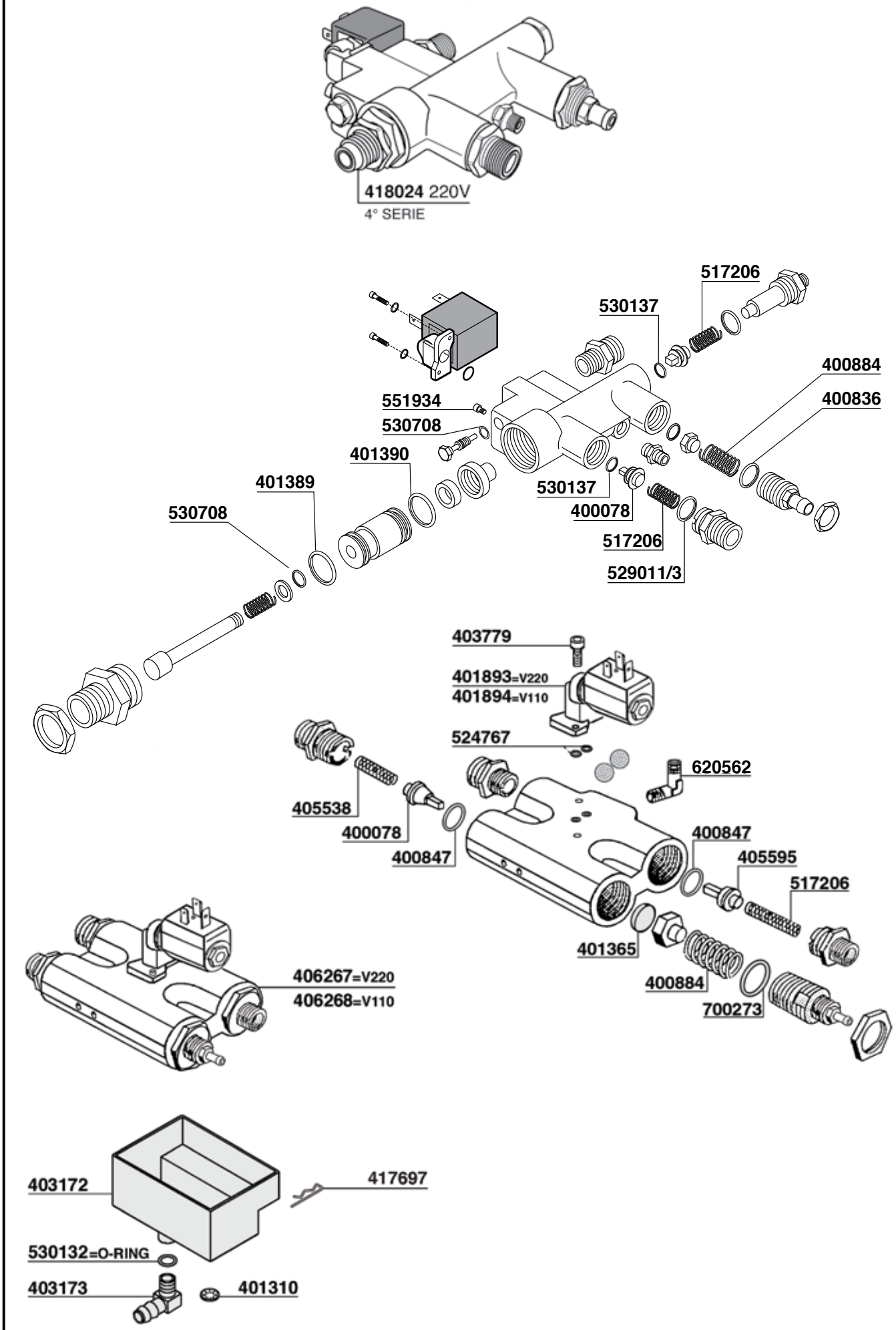
418024 220V
4° SERIE
517206
530137
400884
400836
551934
530708
401390
401389
530708
530137
400078
517206
529011/3
403779
401893=V220
401894=V110
524767
620562
405538
400078
400847
400847
405595
517206
401365
400884
700273
406267=V220
406268=V110
403172
417697
530132=O-RING
403173
401310

BRASILIA

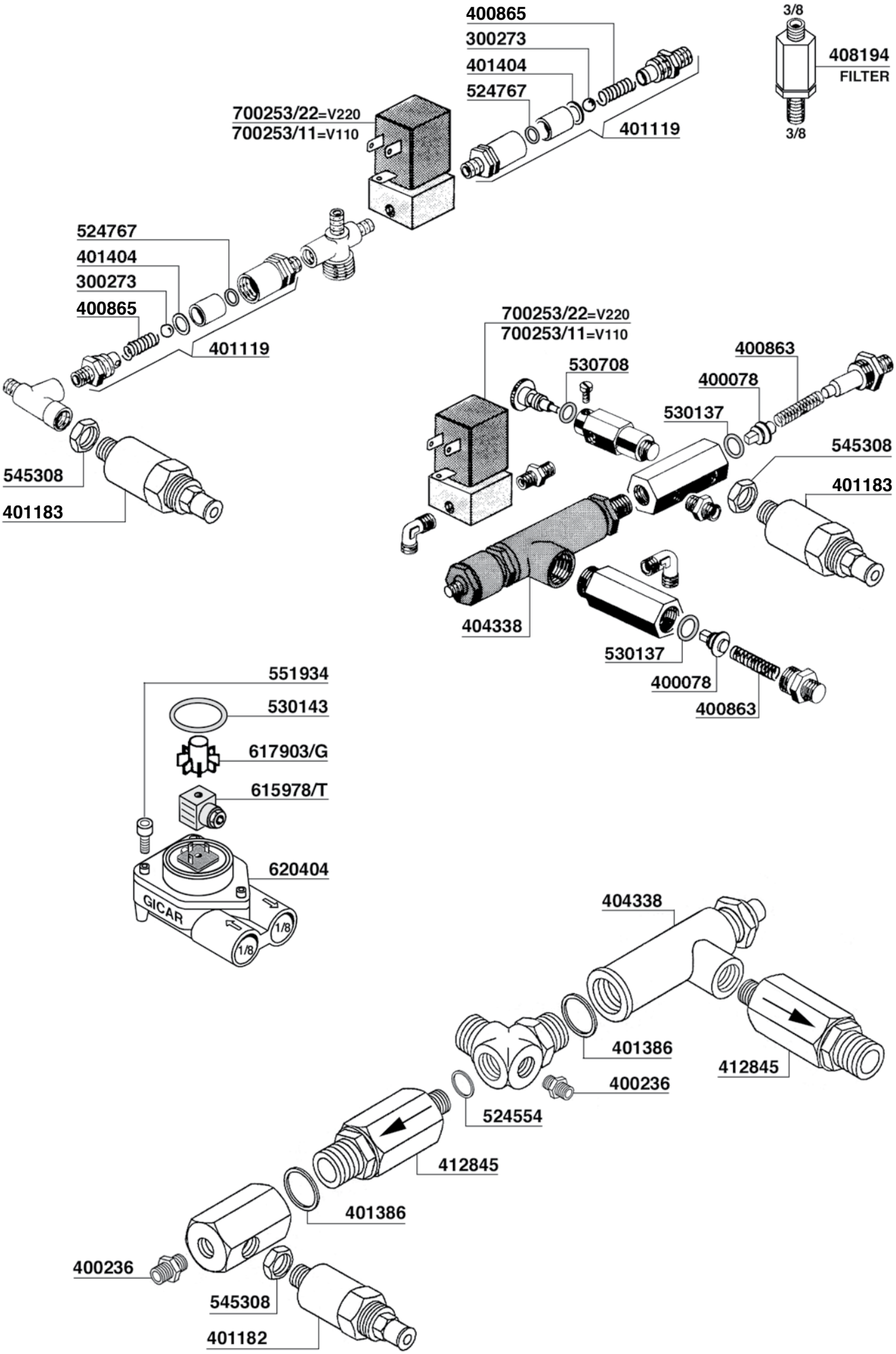
400865
300273
401404
524767
700253/22=V220
700253/11=V110
401119
3/8
408194
FILTER
3/8
524767
401404
300273
400865
401119
545308
401183
700253/22=V220
700253/11=V110
530708
400863
400078
530137
545308
401183
404338
530137
400078
400863
551934
530143
617903/G
615978/T
620404
GICAR
1/8
1/8
404338
401386
412845
400236
524554
412845
401386
400236
545308
401182

BRASILIA

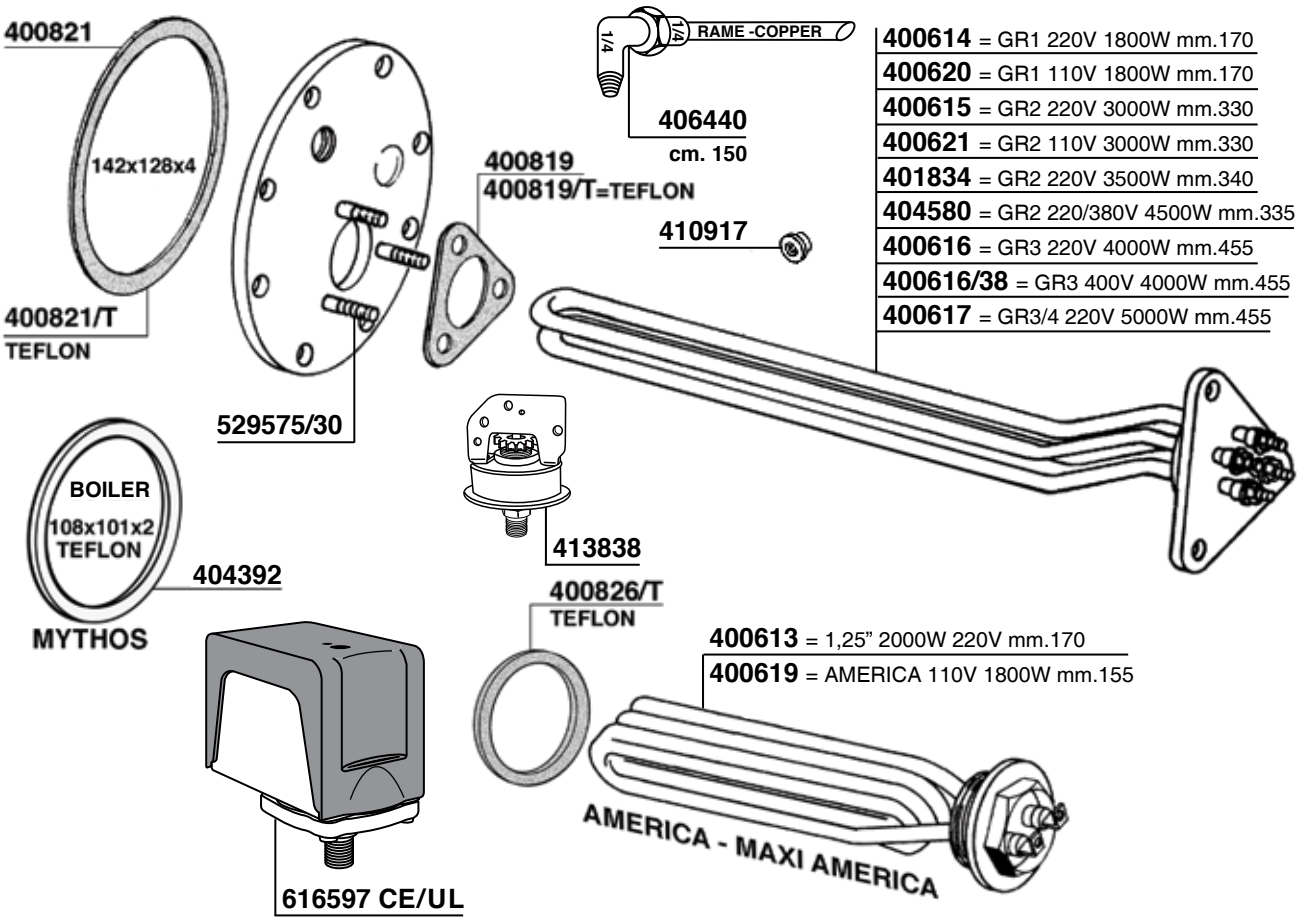
400821
142x128x4
400821/T
TEFLON
529575/30
400819
400819/T=TEFLON
1/4
RAME -COPPER
406440
cm. 150
410917
400614 = GR1 220V 1800W mm.170
400620 = GR1 110V 1800W mm.170
400615 = GR2 220V 3000W mm.330
400621 = GR2 110V 3000W mm.330
401834 = GR2 220V 3500W mm.340
404580 = GR2 220/380V 4500W mm.335
400616 = GR3 220V 4000W mm.455
400616/38 = GR3 400V 4000W mm.455
400617 = GR3/4 220V 5000W mm.455
BOILER
108x101x2
TEFLON
404392
MYTHOS
413838
400826/T
TEFLON
400613 = 1,25" 2000W 220V mm.170
400619 = AMERICA 110V 1800W mm.155
AMERICA - MAXI AMERICA
616597 CE/UL

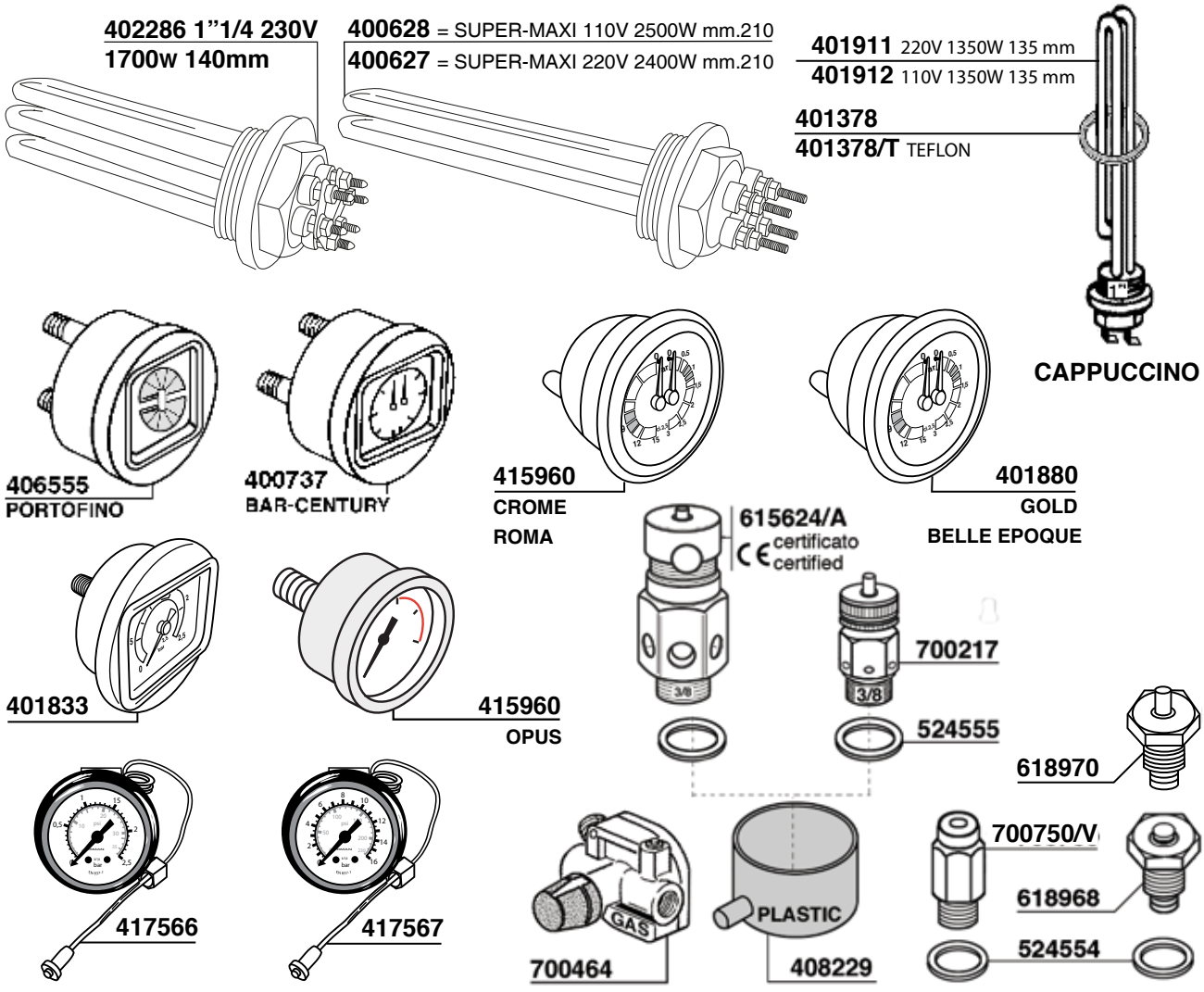
402286 1"1/4 230V
1700w 140mm
400628 = SUPER-MAXI 110V 2500W mm.210
400627 = SUPER-MAXI 220V 2400W mm.210
401911 220V 1350W 135 mm
401912 110V 1350W 135 mm
401378
401378/T TEFLON
1"
CAPPUCCINO
406555
PORTOFINO
400737
BAR-CENTURY
415960
CROME
ROMA
401880
GOLD
BELLE EPOQUE
615624/A
certificato
certified
3/8
700217
524555
401833
415960
OPUS
618970
417566
417567
GAS
700464
PLASTIC
408229
700750/V
618968
524554

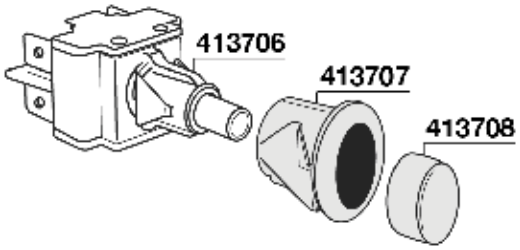
413706
413707
413708

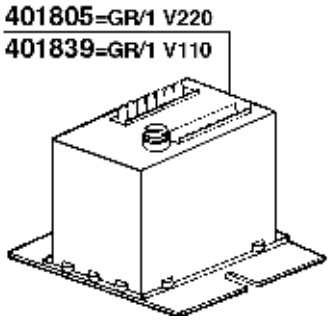
401805=GR/1 V220
401839=GR/1 V110

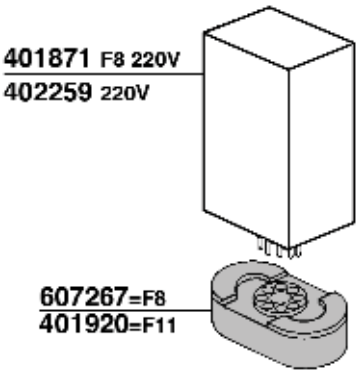
401871 F8 220V
402259 220V
607267=F8
401920=F11

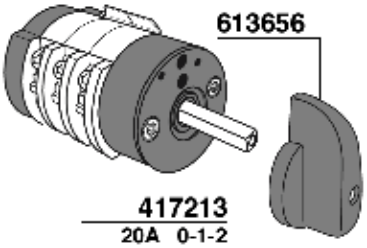
613656
417213
20A 0-1-2

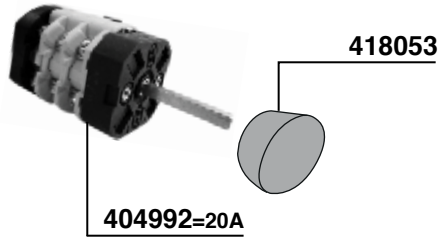
418053
404992=20A

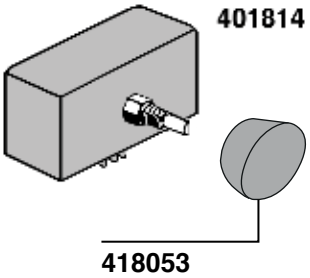
401814
418053

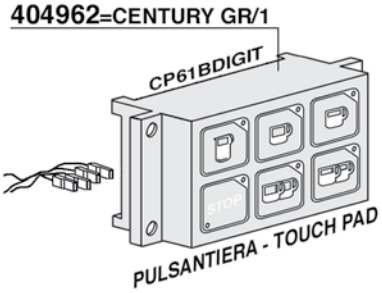
404962=CENTURY GR/1
CP61BDIGIT
STOP
PULSANTIERA - TOUCH PAD

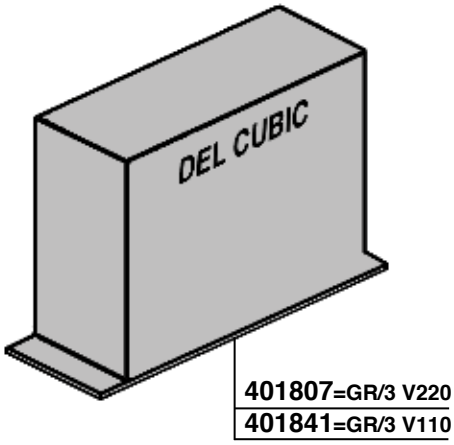
DEL CUBIC
401807=GR/3 V220
401841=GR/3 V110

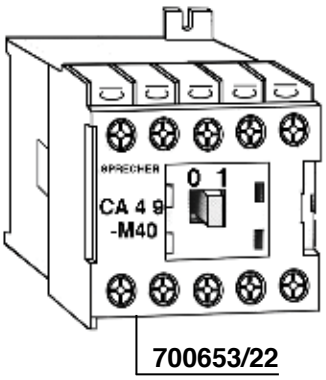
SPRECHER
0 1
CA 4 9
-M40
700653/22

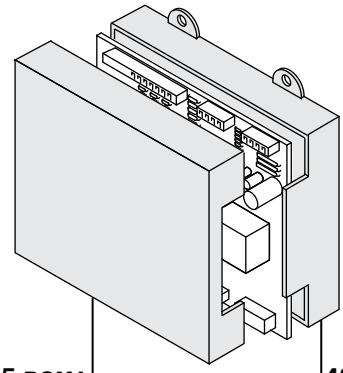
416035 ROMA
9.5.22.58 G00
GICAR CODE
423376 AGILE
9.5.25.69 G00
GICAR CODE

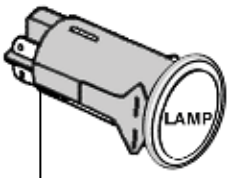
LAMP
401975=INTERRUTTORE
SWITCH BIP.

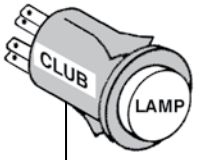
CLUB
LAMP
400660 V230 BIP.
PULSANTE
PUSH BOTTON

BRASILIA

405475=CAPPUCC.CY XP61 V220

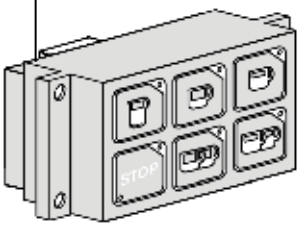

PULSANTIERA+CENTRALINA
TOUCH PAD+ELECTRONIC BOX

406556=XP65 GR/1 V220

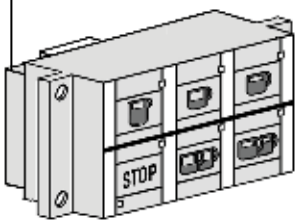

PULSANTIERA+CENTRALINA
TOUCH PAD+ELECTRONIC BOX

408494=PORTOFINO V220
CENTURY V220 96'
408711=PORTOFINO V110
CENTURY V110 96'

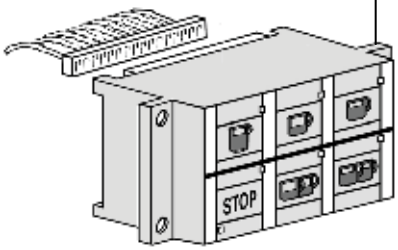

PULSANTIERA+CENTRALINA
TOUCH PAD+ELECTRONIC BOX

413426=105 - 205
CENTURY 02'
PORTOFINO

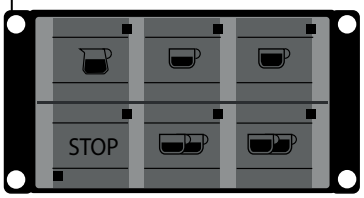

PULSANTIERA - TOUCH PAD

413123

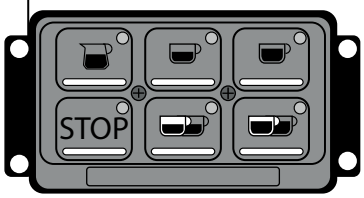

RESTYLING MODEL

417578 ROMA
GICAR CODE 9.9.07.26G

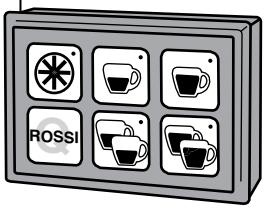

418748=OPUS 14 PIN
420250=SUBLIMA 16 PIN

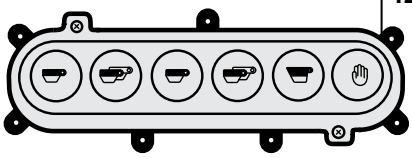

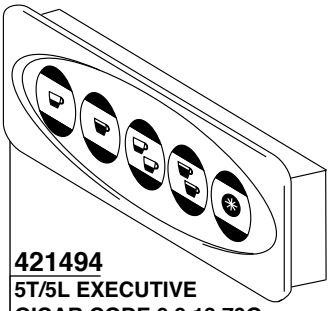

421494
5T/5L EXECUTIVE
GICAR CODE 9.9.13.70G

422706
FRESCOBALDI-MAJOR 5T/5L
GICAR CODE 9.9.14.83G

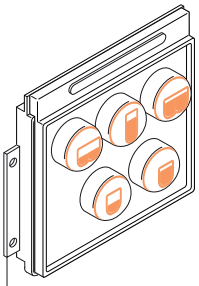

414484
EXCELSIOR

419424
BLU AGILE H20
GICAR CODE 9.9.13.21G

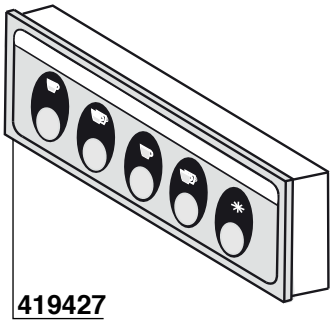

419427
BLU AGILE / CADETTA 5T/5L
GICAR CODE 9.9.13.22G

413420=GR2 V220	01.14.0077
413421=GR3 V220	01.14.0079
413422=GR4 V220	01.14.0076
413423=GR2 V240	01.14.0085
413425=GR3 V240	01.14.0083

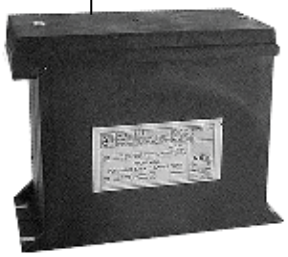

RESTYLING MODEL

409950=GR/2V220
409952=GR/3V220
409953=GR/4V220

A=POMPA AUTOL.
B=DOSATURA H2O
C=GRUPPO 1
D=GRUPPO 2
E=GRUPPO 3
F=GRUPPO 4

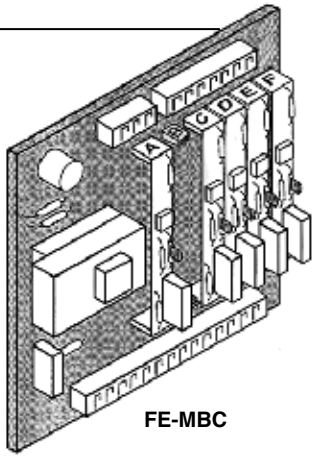

FE-MBC

410141 FLAT CABLE GR/2 DIGIT BAR

410142 FLAT CABLE GR/3 DIGIT BAR

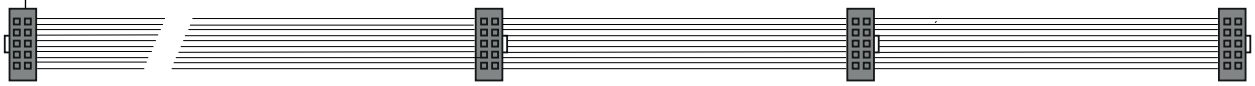

418306 230V
CENTRALINA PER
DISPLAY HW
01.14.0179

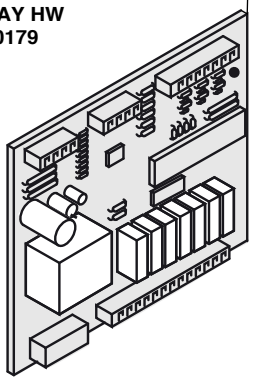

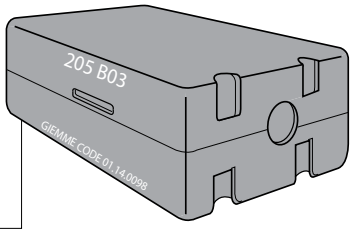

414133
CENTR.PER DISPLAY
230V PROFESSIONAL
01.14.0098

417836 230V
CENTRALINA 3
GR OPUS
01.14.0162

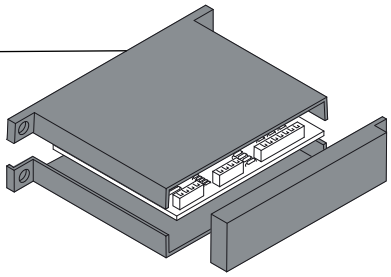

415954 230V
CENTRALINA 2/3
GR EXELCIOR
01.14.0138

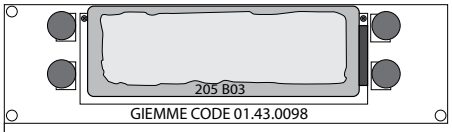

414134
DISPLAY C/TASTI
PROGRAMMAZ. PROFESSIONAL
01.43.0098

424069
SUBLIMA 230V

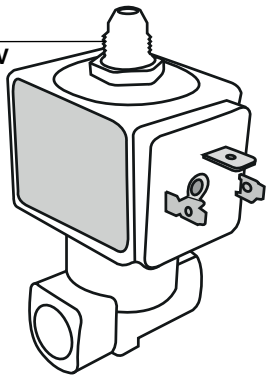

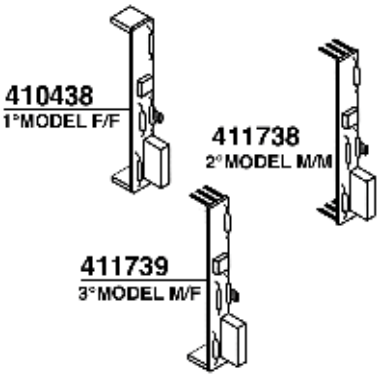

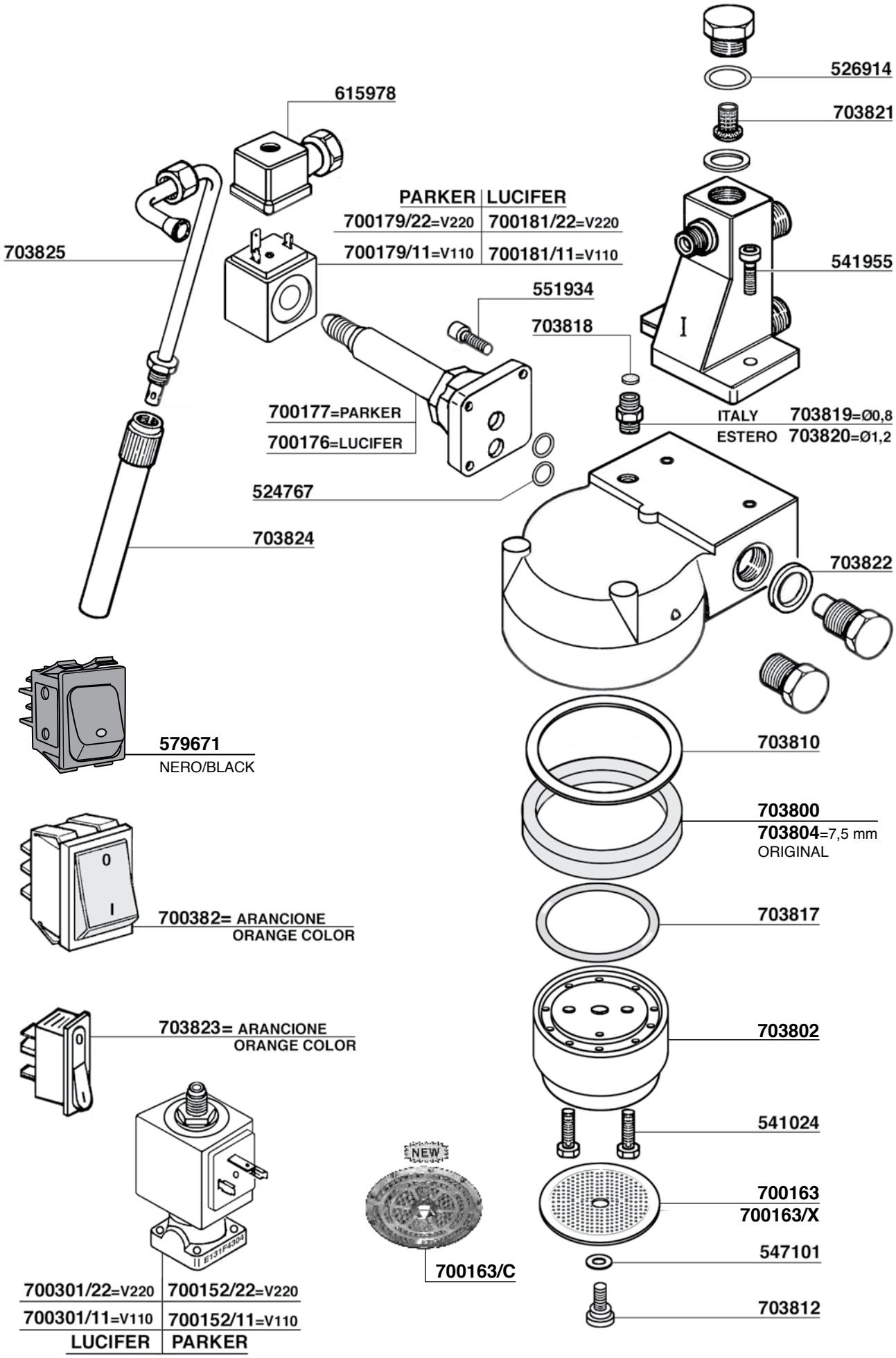
526914
703821
615978
PARKER | LUCIFER
700179/22=V220 | 700181/22=V220
700179/11=V110 | 700181/11=V110
703825
541955
551934
703818
700177=PARKER
700176=LUCIFER
ITALY 703819=Ø0,8
ESTERO 703820=Ø1,2
524767
703824
703822
579671
NERO/BLACK
703810
703800
703804=7,5 mm
ORIGINAL
700382= ARANCIONE
ORANGE COLOR
703817
703823= ARANCIONE
ORANGE COLOR
703802
541024
NEW
700163
700163/X
547101
700163/C
703812
700301/22=V220 | 700152/22=V220
700301/11=V110 | 700152/11=V110
LUCIFER | PARKER

CARIMALI

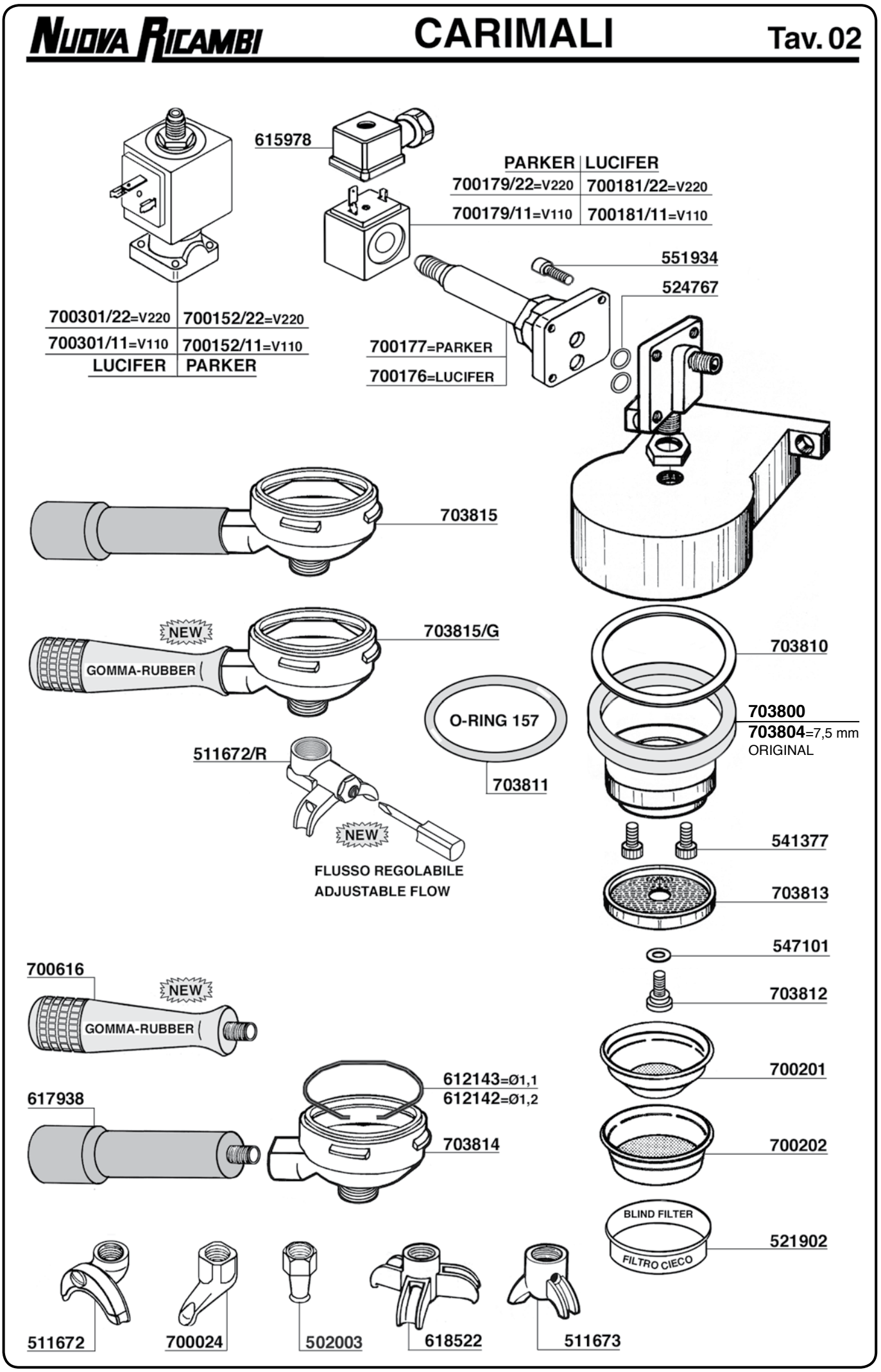
615978
PARKER | LUCIFER
700179/22=V220 | 700181/22=V220
700179/11=V110 | 700181/11=V110
551934
524767
700301/22=V220 | 700152/22=V220
700301/11=V110 | 700152/11=V110
LUCIFER | PARKER
700177=PARKER
700176=LUCIFER
703815
NEW
GOMMA-RUBBER
703815/G
703810
O-RING 157
703800
703804=7,5 mm
ORIGINAL
511672/R
703811
NEW
FLUSSO REGOLABILE
ADJUSTABLE FLOW
541377
703813
547101
700616
NEW
GOMMA-RUBBER
703812
700201
612143=Ø1,1
612142=Ø1,2
617938
703814
700202
BLIND FILTER
FILTRO CIECO
521902
511672
700024
502003
618522
511673

CARIMALI

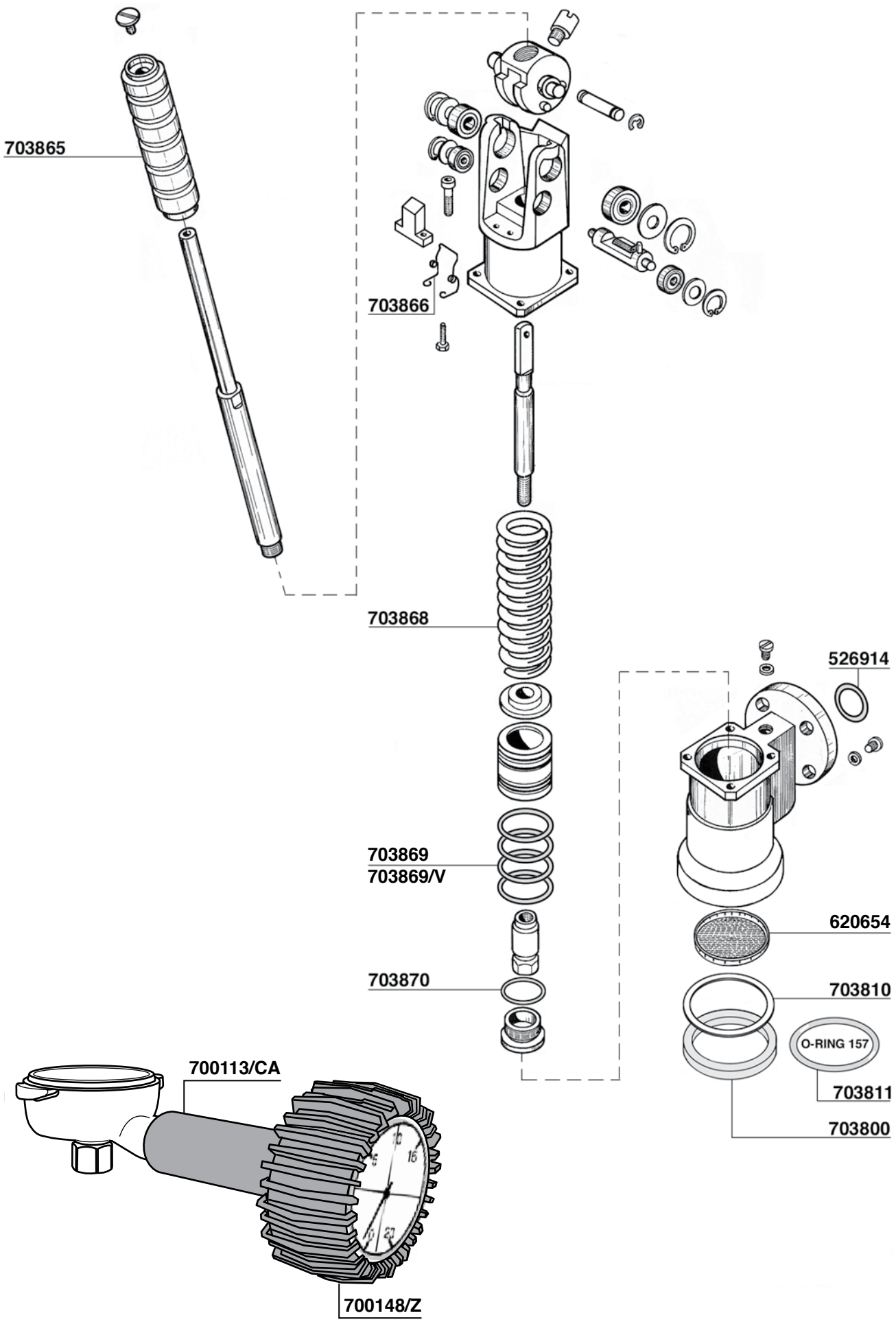
703865
703866
703868
526914
703869
703869/V
620654
703870
703810
O-RING 157
703811
703800
700113/CA
700148/Z

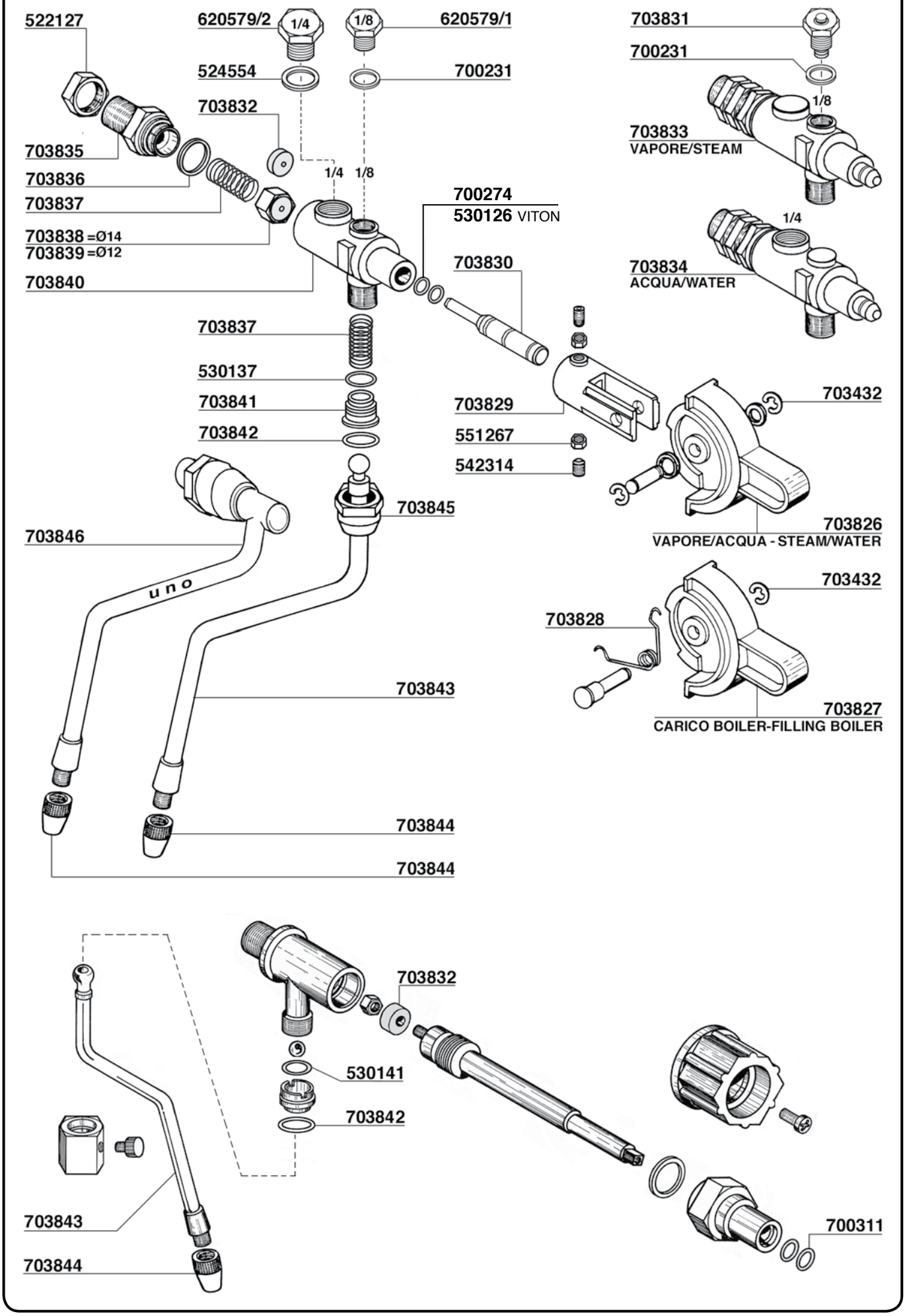
522127
620579/2
1/4
1/8
620579/1
703831
700231
524554
700231
703832
1/8
703833
VAPORE/STEAM
703835
703836
703837
1/4 1/8
700274
530126 VITON
703838 =Ø14
703839 =Ø12
703840
1/4
703834
ACQUA/WATER
703830
703837
530137
703841
703842
703829
551267
542314
703432
703845
703826
VAPORE/ACQUA - STEAM/WATER
703846
uno
703432
703828
703843
703827
CARICO BOILER-FILLING BOILER
703844
703844
703832
530141
703842
703843
703844
700311

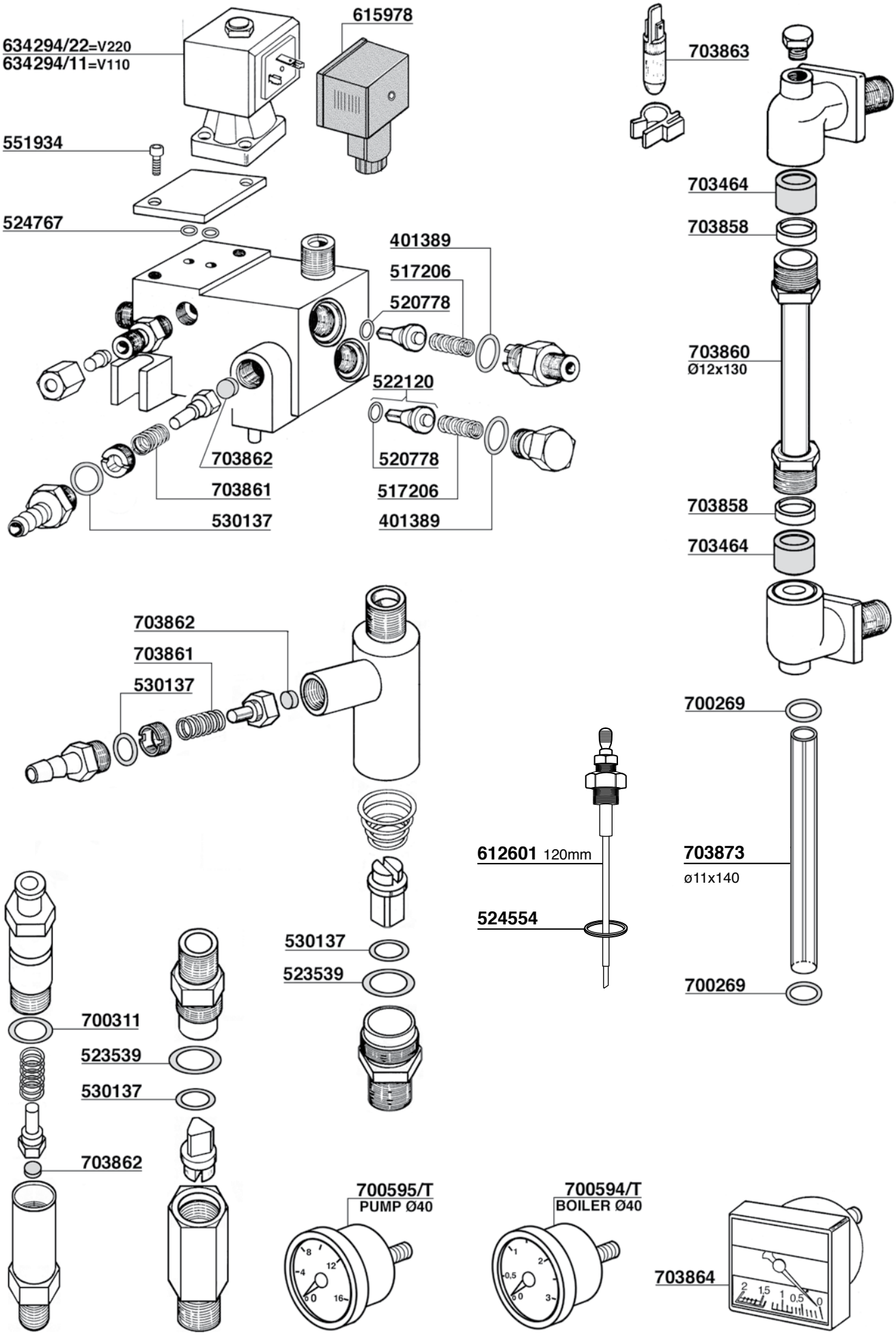
634294/22=V220
634294/11=V110
615978
551934
524767
401389
517206
520778
522120
703862
703861
530137
520778
517206
401389
703863
703464
703858
703860
Ø12x130
703858
703464
703862
703861
530137
700269
612601 120mm
524554
703873
ø11x140
700269
530137
523539
700311
523539
530137
703862
700595/T
PUMP Ø40
700594/T
BOILER Ø40
703864

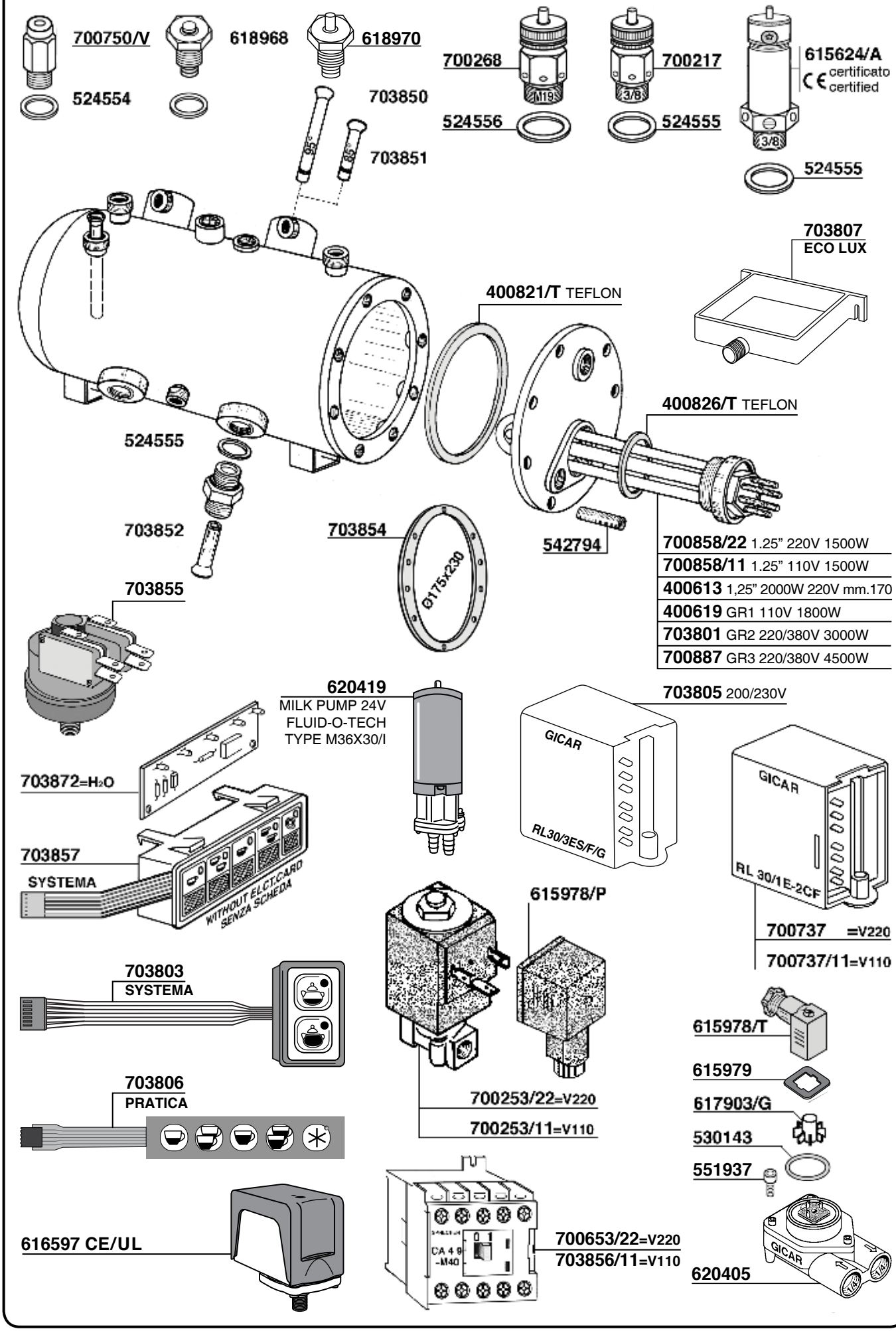
700750/V
618968
618970
524554
703850
703851
700268
700217
615624/A
certificato
certified
524556
524555
524555
703807
ECO LUX
400821/T TEFLON
400826/T TEFLON
524555
703852
703854
Ø175x230
542794
700858/22 1.25" 220V 1500W
700858/11 1.25" 110V 1500W
400613 1,25" 2000W 220V mm.170
400619 GR1 110V 1800W
703801 GR2 220/380V 3000W
700887 GR3 220/380V 4500W
703855
620419
MILK PUMP 24V
FLUID-O-TECH
TYPE M36X30/I
703805 200/230V
GICAR
RL30/3ES/F/G
GICAR
RL 30/1E-2CF
703872=H2O
703857
SYSTEMA
WITHOUT ELCT.CARD
SENZA SCHEDA
615978/P
700737 =V220
700737/11=V110
703803
SYSTEMA
615978/T
615979
703806
PRATICA
700253/22=V220
700253/11=V110
617903/G
530143
551937
616597 CE/UL
700653/22=V220
703856/11=V110
620405
GICAR

NUOVA RICAMBI PARTI COMPATIBILI CASADIO Tav. 01

DIECI A/S - UNDICI A/S - DODICI A/S QUINDICI A/S

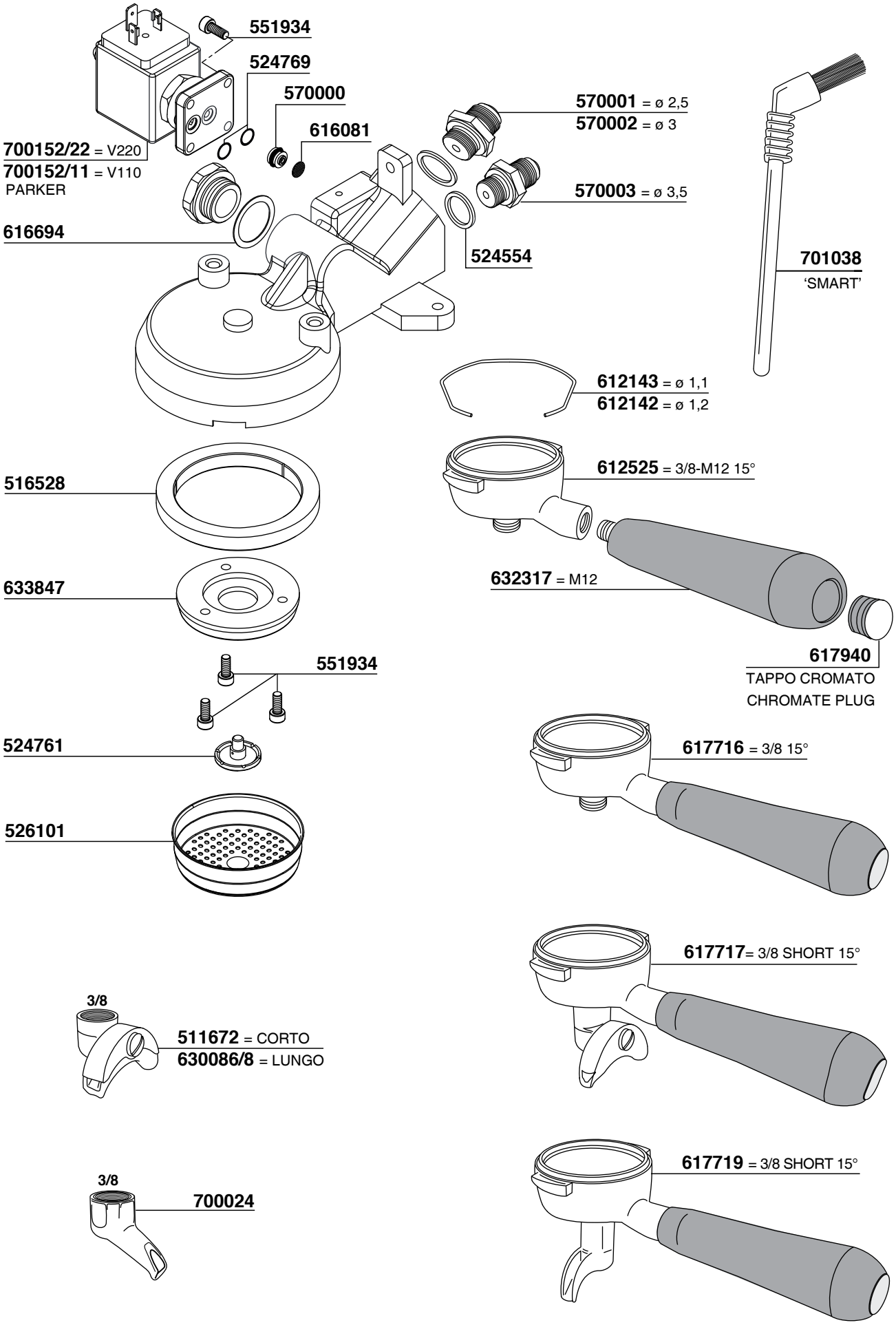

VENTI

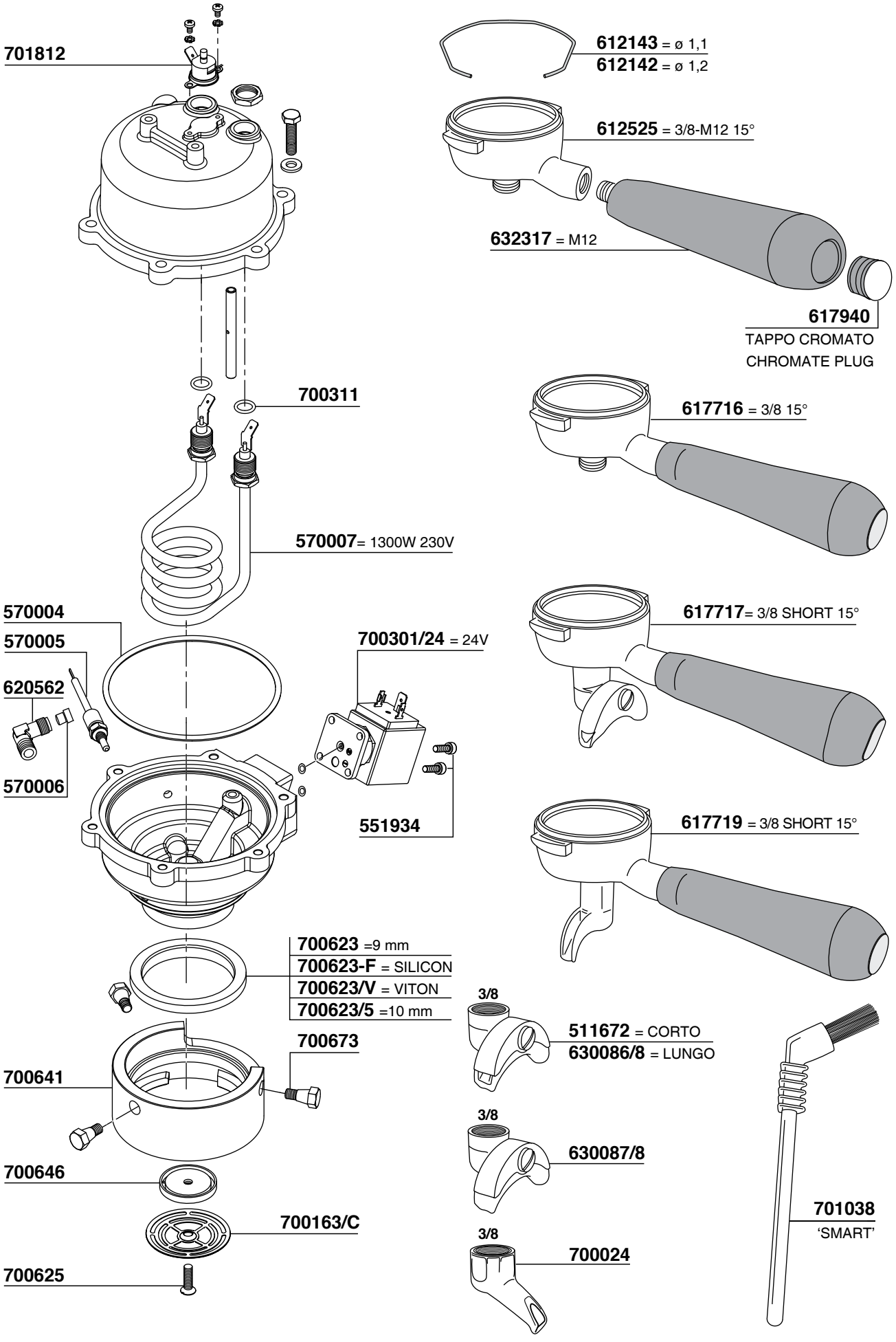
701812
612143 = ø 1,1
612142 = ø 1,2
612525 = 3/8-M12 15°
632317 = M12
617940
TAPPO CROMATO
CHROMATE PLUG
700311
617716 = 3/8 15°
570007= 1300W 230V
570004
570005
620562
570006
700301/24 = 24V
551934
617717= 3/8 SHORT 15°
617719 = 3/8 SHORT 15°
700623 =9 mm
700623-F = SILICON
700623/V = VITON
700623/5 =10 mm
700673
700641
700646
700163/C
700625
3/8
511672 = CORTO
630086/8 = LUNGO
3/8
630087/8
3/8
700024
701038
'SMART'

DIECI A/S - UNDICI A/S - DODICI A/S QUINDICI A/S - VENTI

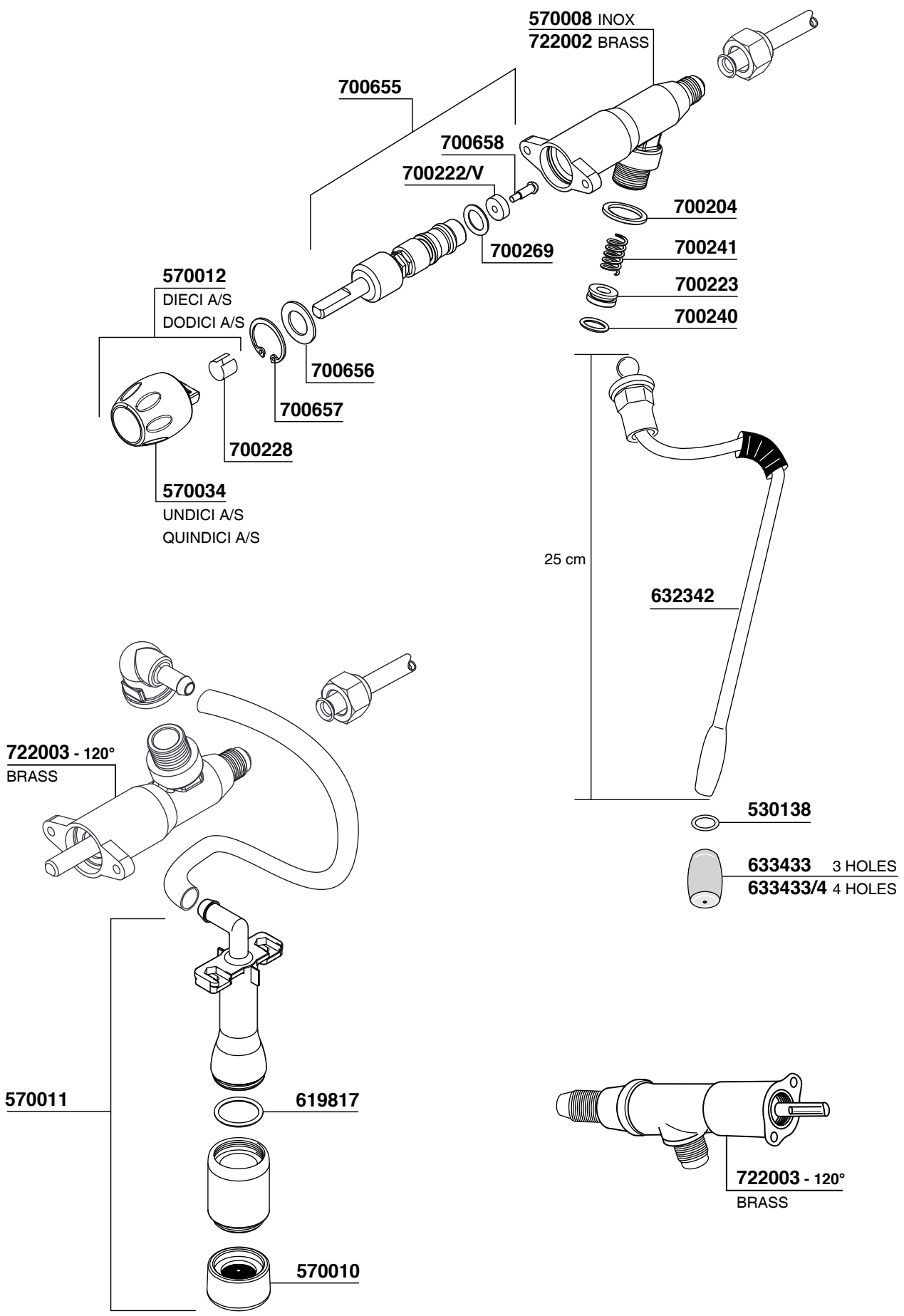

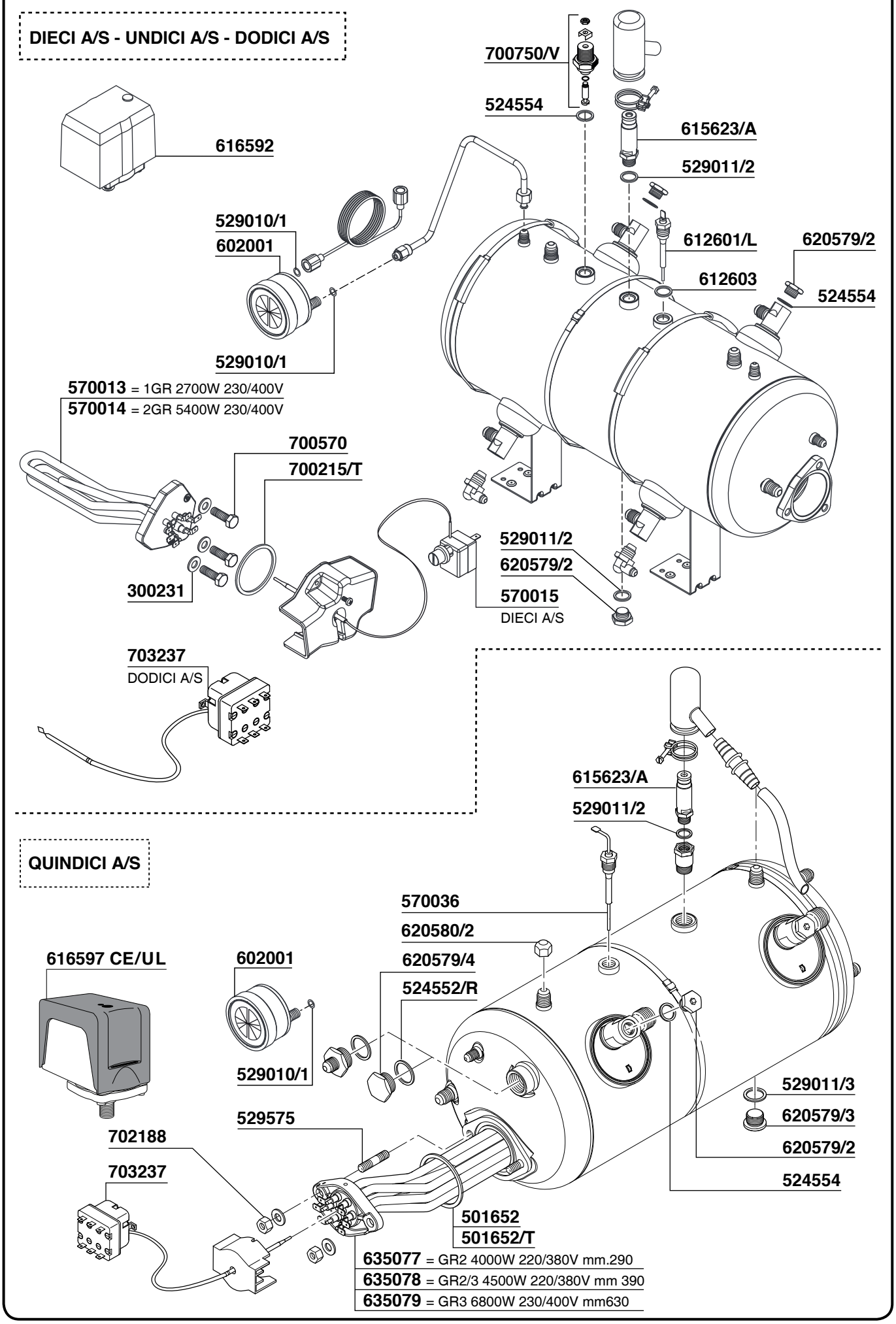
DIECI A/S - UNDICI A/S - DODICI A/S
700750/V
524554
616592
615623/A
529011/2
529010/1
602001
612601/L
620579/2
612603
524554
529010/1
570013 = 1GR 2700W 230/400V
570014 = 2GR 5400W 230/400V
700570
700215/T
529011/2
620579/2
300231
570015
DIECI A/S
703237
DODICI A/S
615623/A
529011/2
QUINDICI A/S
570036
620580/2
616597 CE/UL
602001
620579/4
524552/R
529010/1
529011/3
620579/3
529575
702188
620579/2
703237
524554
501652
501652/T
635077 = GR2 4000W 220/380V mm.290
635078 = GR2/3 4500W 220/380V mm 390
635079 = GR3 6800W 230/400V mm630

VENTI

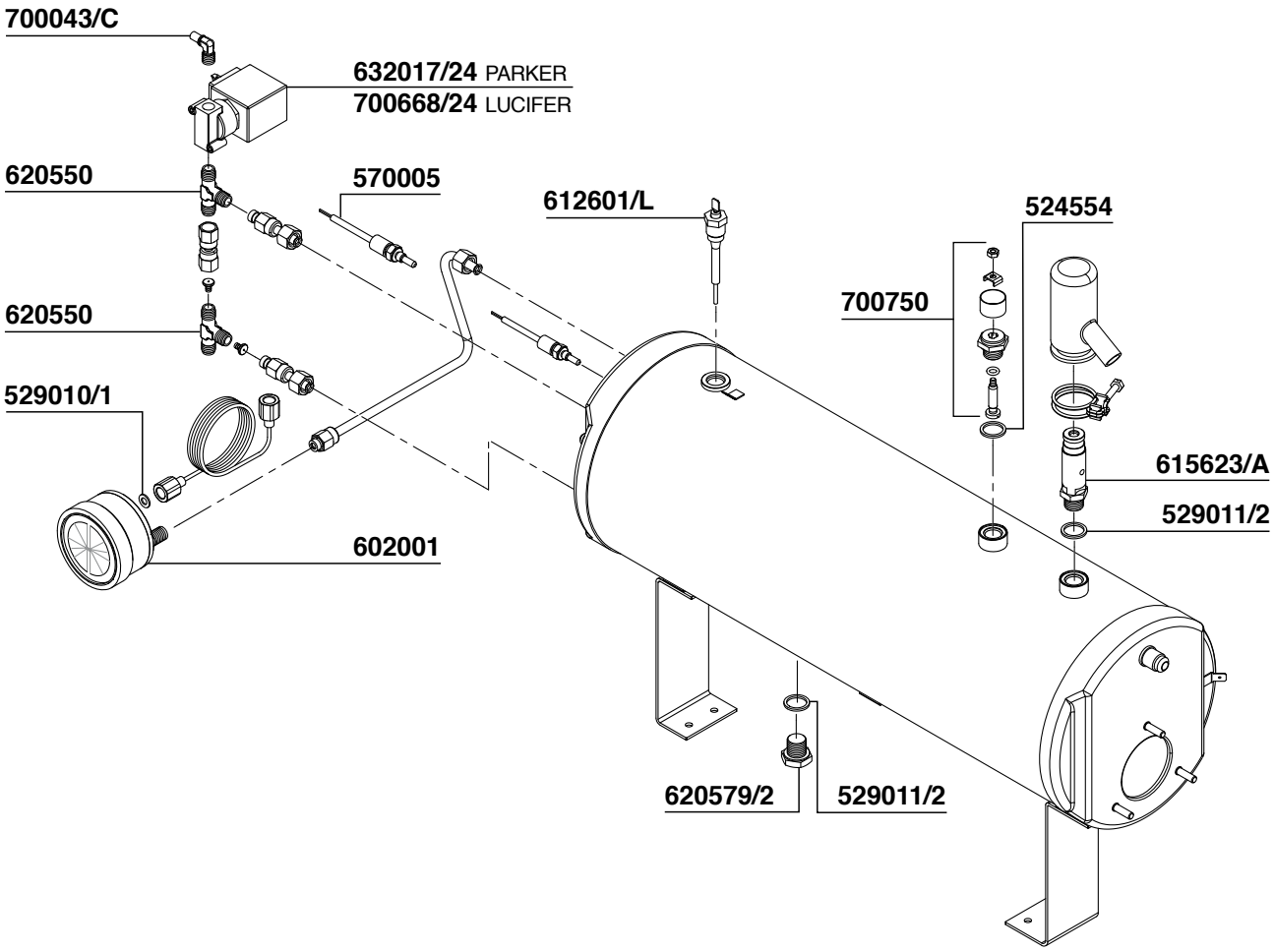
700043/C
632017/24 PARKER
700668/24 LUCIFER
620550
570005
612601/L
524554
700750
620550
529010/1
615623/A
529011/2
602001
620579/2
529011/2

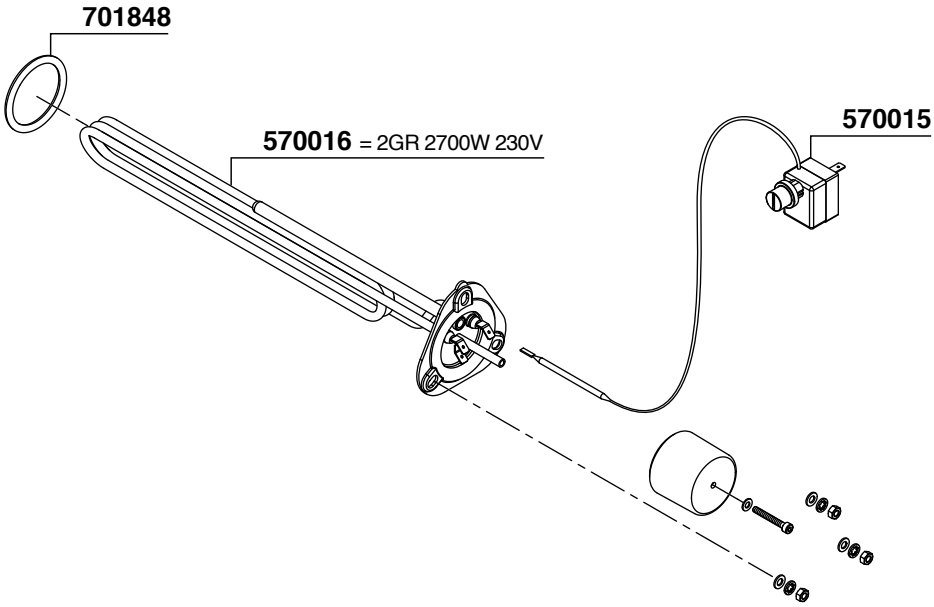
701848
570016 = 2GR 2700W 230V
570015

DIECI A/S - UNDICI A/S - DODICI A/S QUINDICI A/S - VENTI

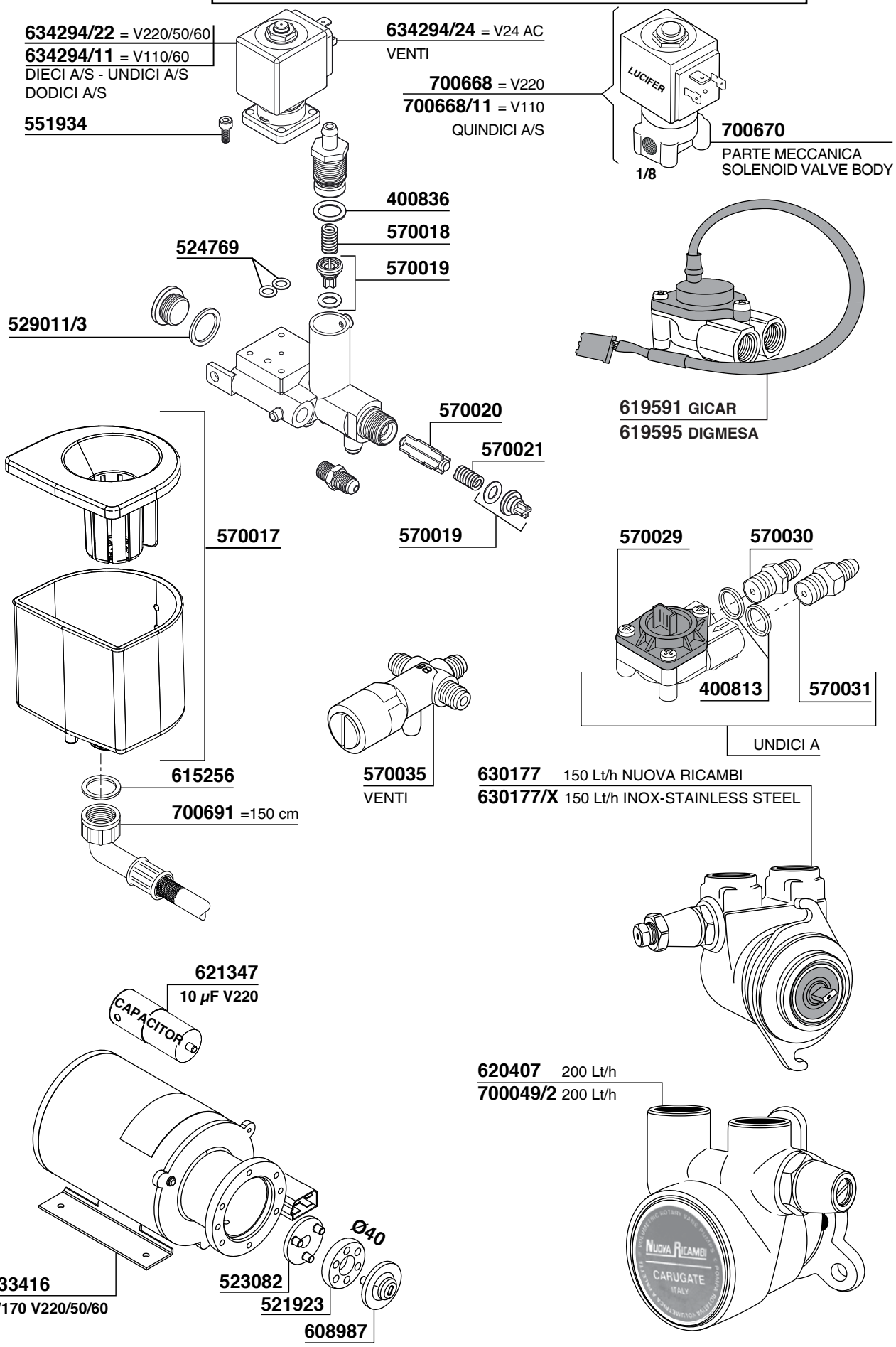

DIECI A/S - UNDICI A/S - DODICI A/S QUINDICI A/S - VENTI

570022

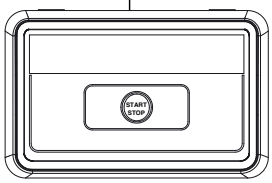

DIECI S

570023

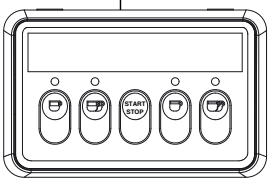

DIECI A

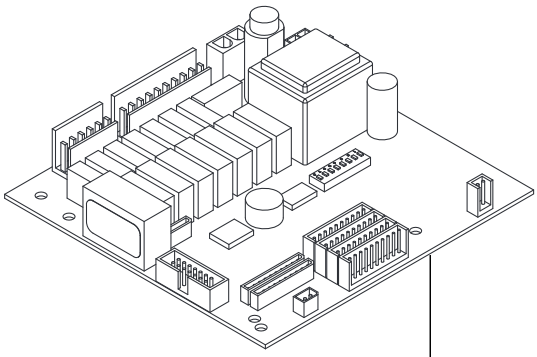

570024 DIECI A/S - UNDICI A/S
DODICI A/S - QUINDICI A/S

570025

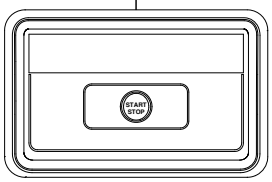

DODICI S

570026

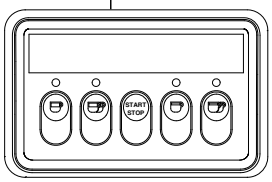

DODICI A

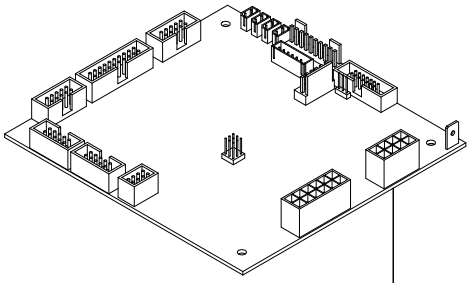

570028 VENTI

570027

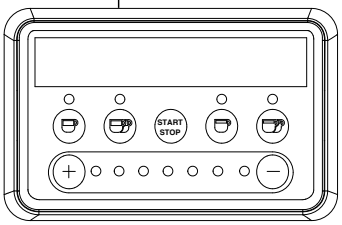

VENTI

619006
QUINDICI S

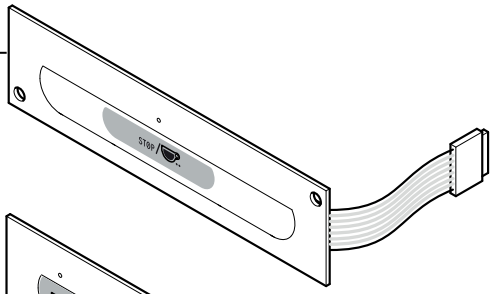

570032
UNDICI A

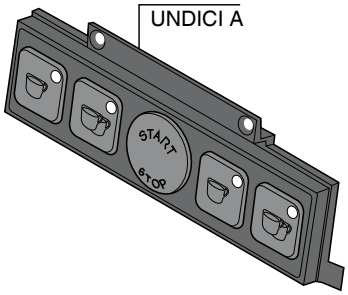

570033
UNDICI S

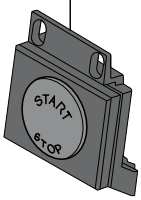

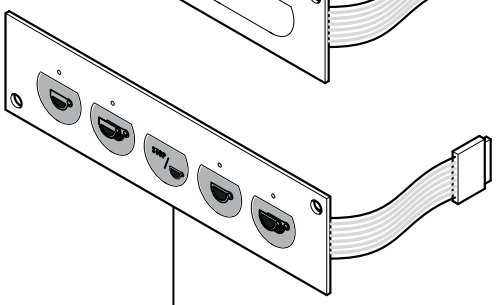

570037
QUINDICI A

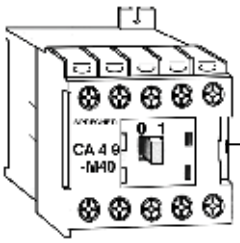

700653/22=V220
DIECI A/S - UNDICI A/S - VENTI

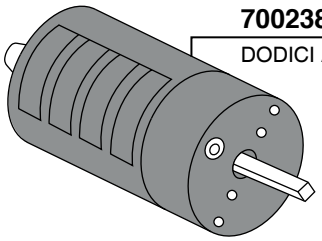

700238
DODICI A/S - QUINDICI A/S

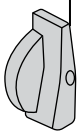

613656

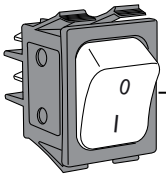

700429/V
DIECI A/S - UNDICI A/S - VENTI

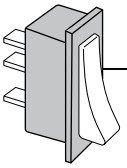

703823
DODICI A/S - QUINDICI A/S

NUOVA RICAMBI PARTI COMPATIBILI CIMBALI Tav. 01

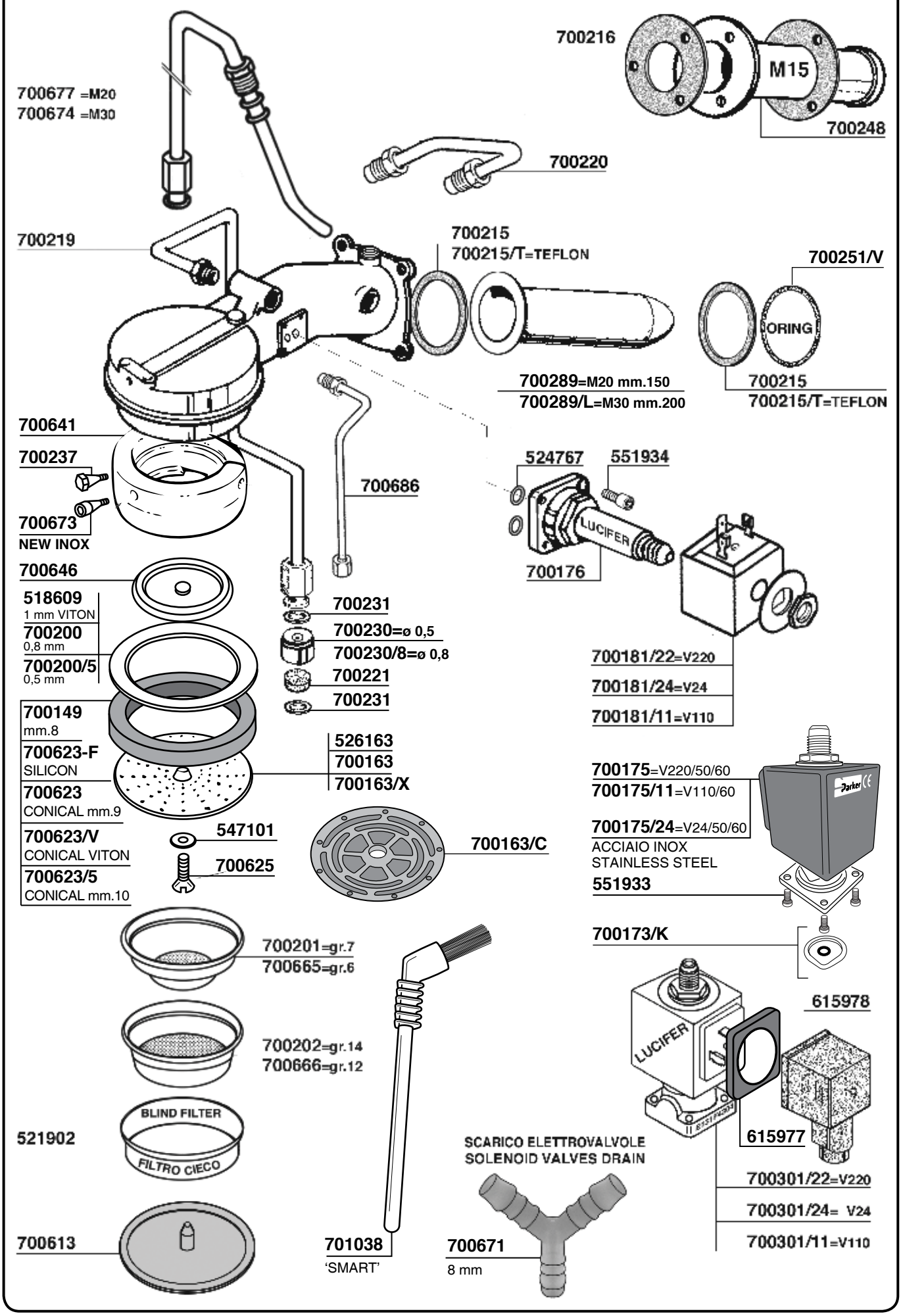

NUOVA RICAMBI PARTI COMPATIBILI CIMBALI Tav. 02

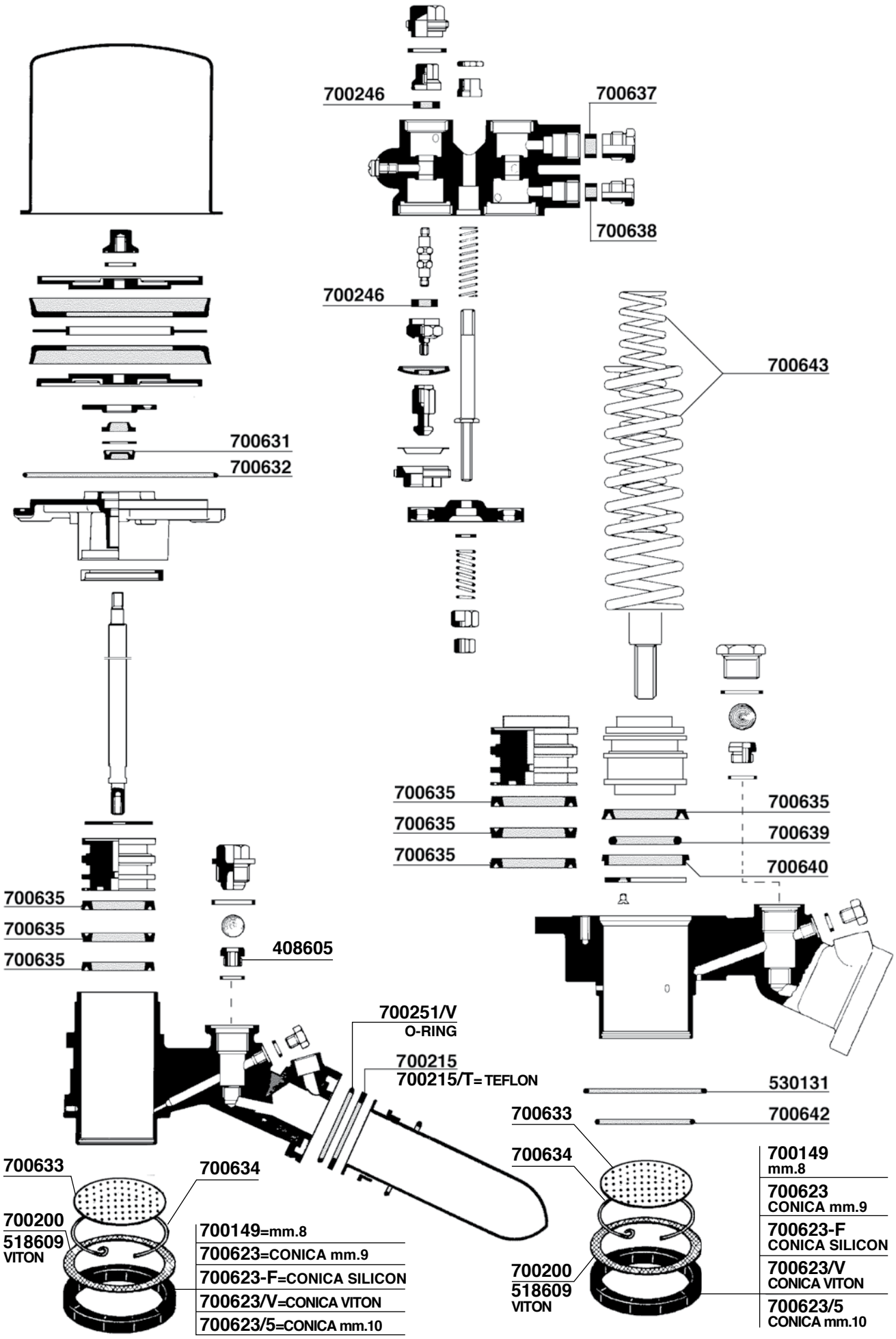

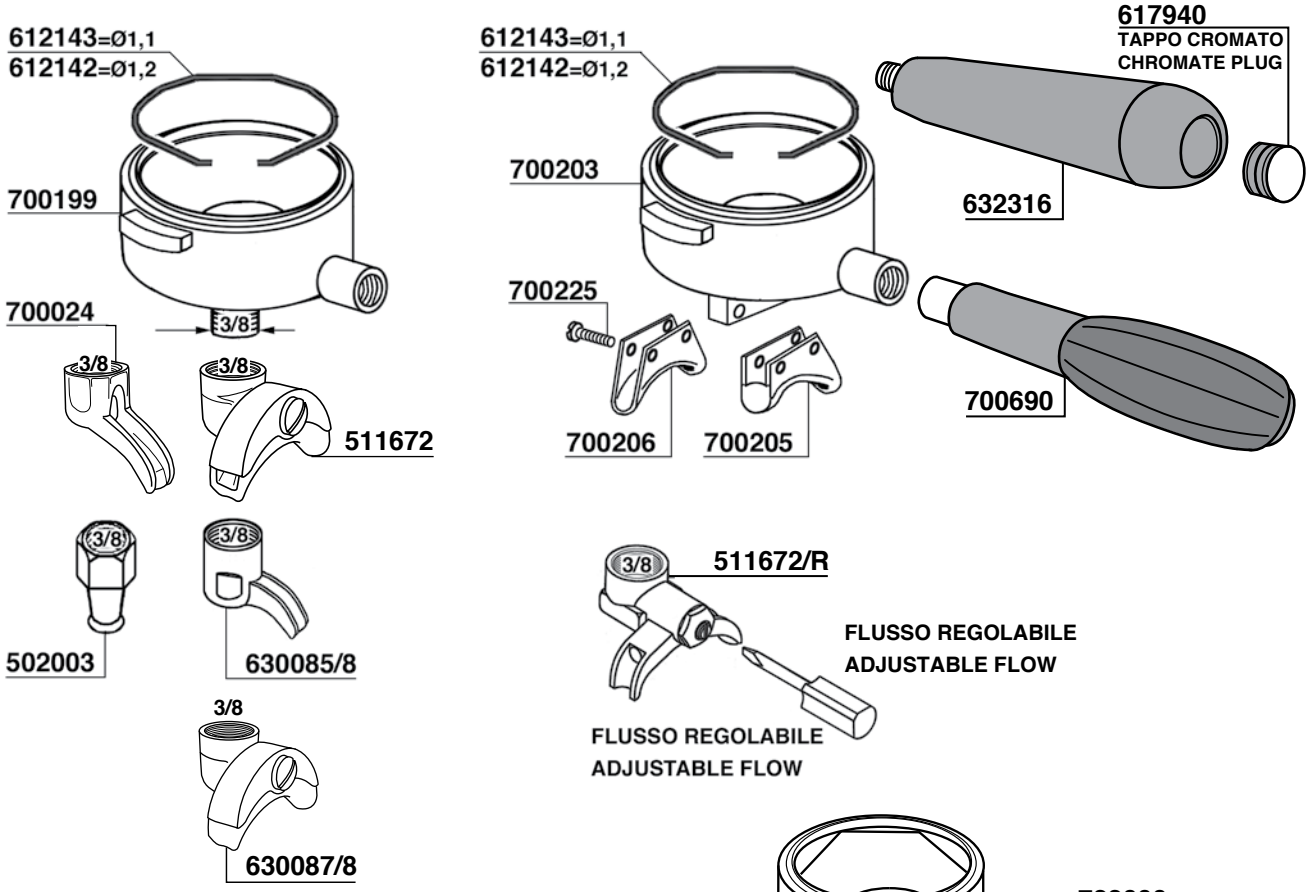
612143=Ø1,1
612142=Ø1,2
700199
700024
3/8
511672
502003
630085/8
630087/8
700203
700225
700206
700205
617940
TAPPO CROMATO
CHROMATE PLUG
632316
700690
511672/R
FLUSSO REGOLABILE
ADJUSTABLE FLOW

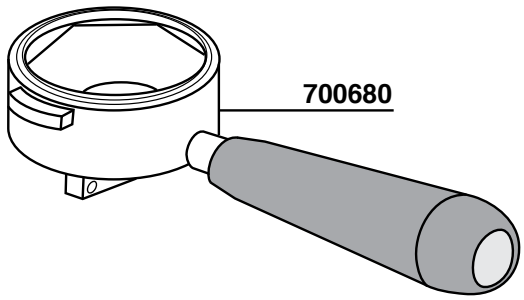
700680

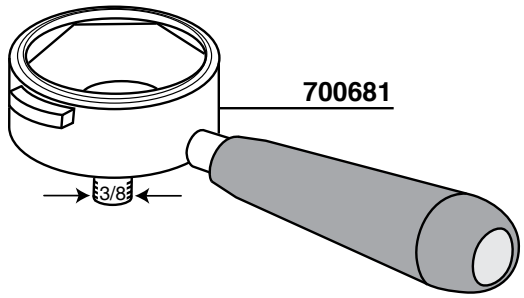
700681
3/8

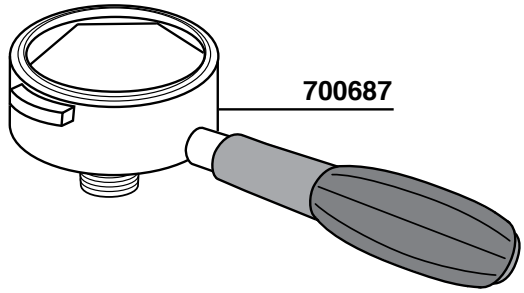
700687

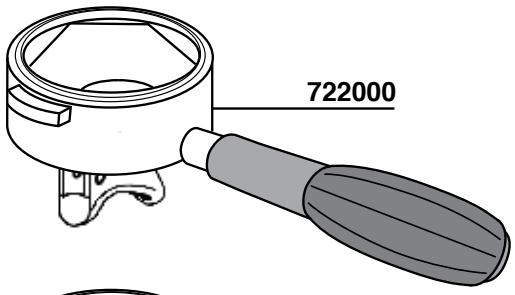
722000

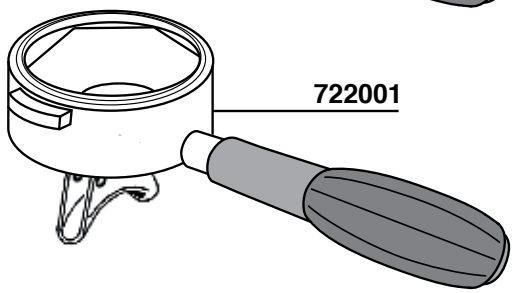
722001

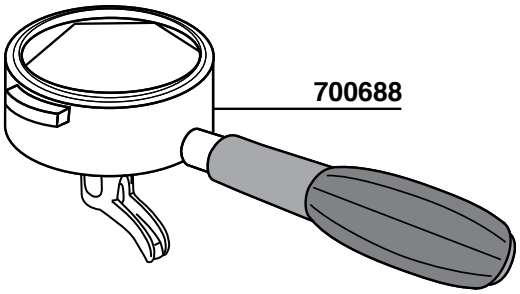
700688

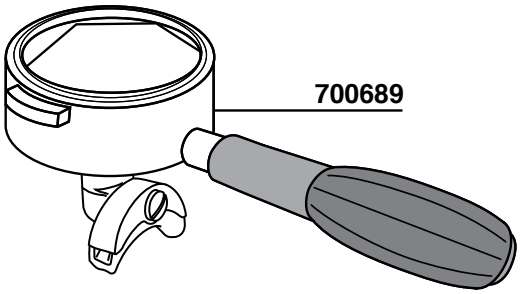
700689

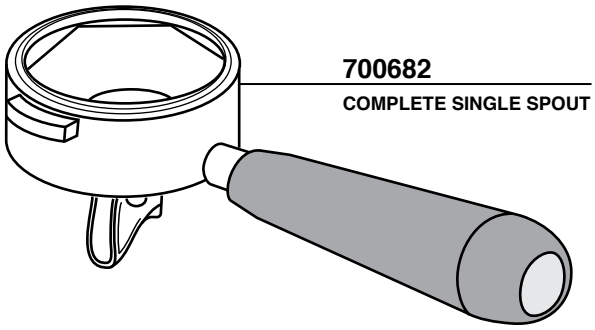
700682
COMPLETE SINGLE SPOUT

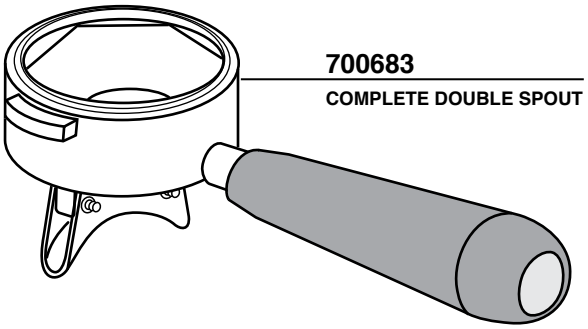
700683
COMPLETE DOUBLE SPOUT

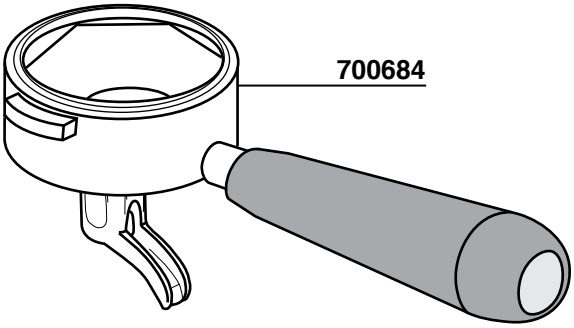
700684

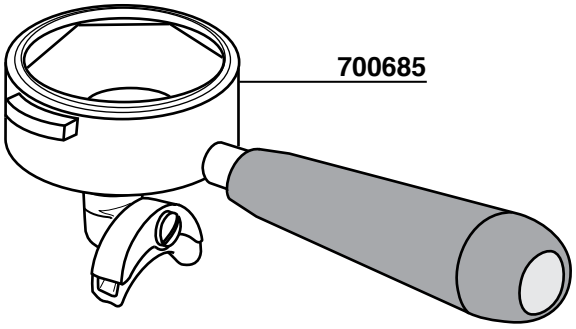
700685

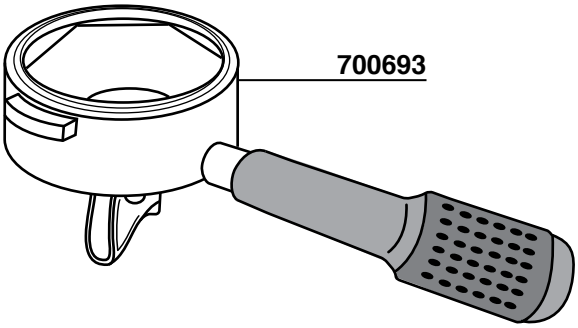
700693

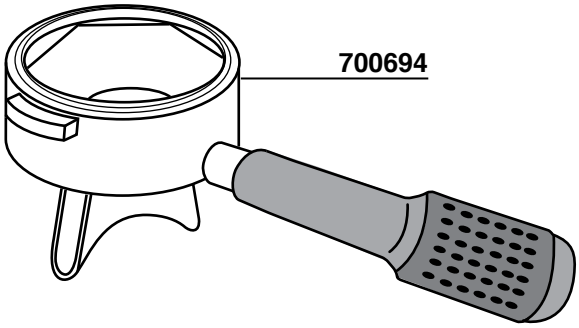
700694

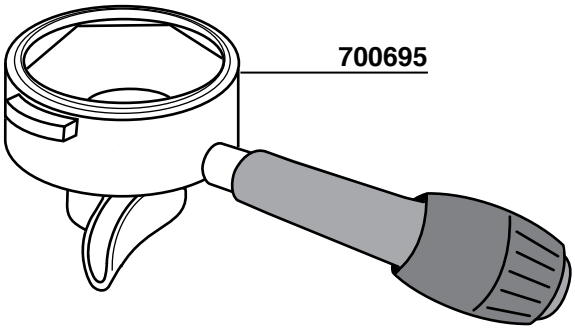
700695

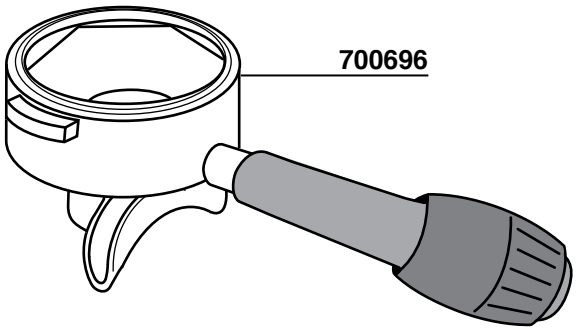
700696

NUOVA RICAMBI PARTI COMPATIBILI CIMBALI Tav.05

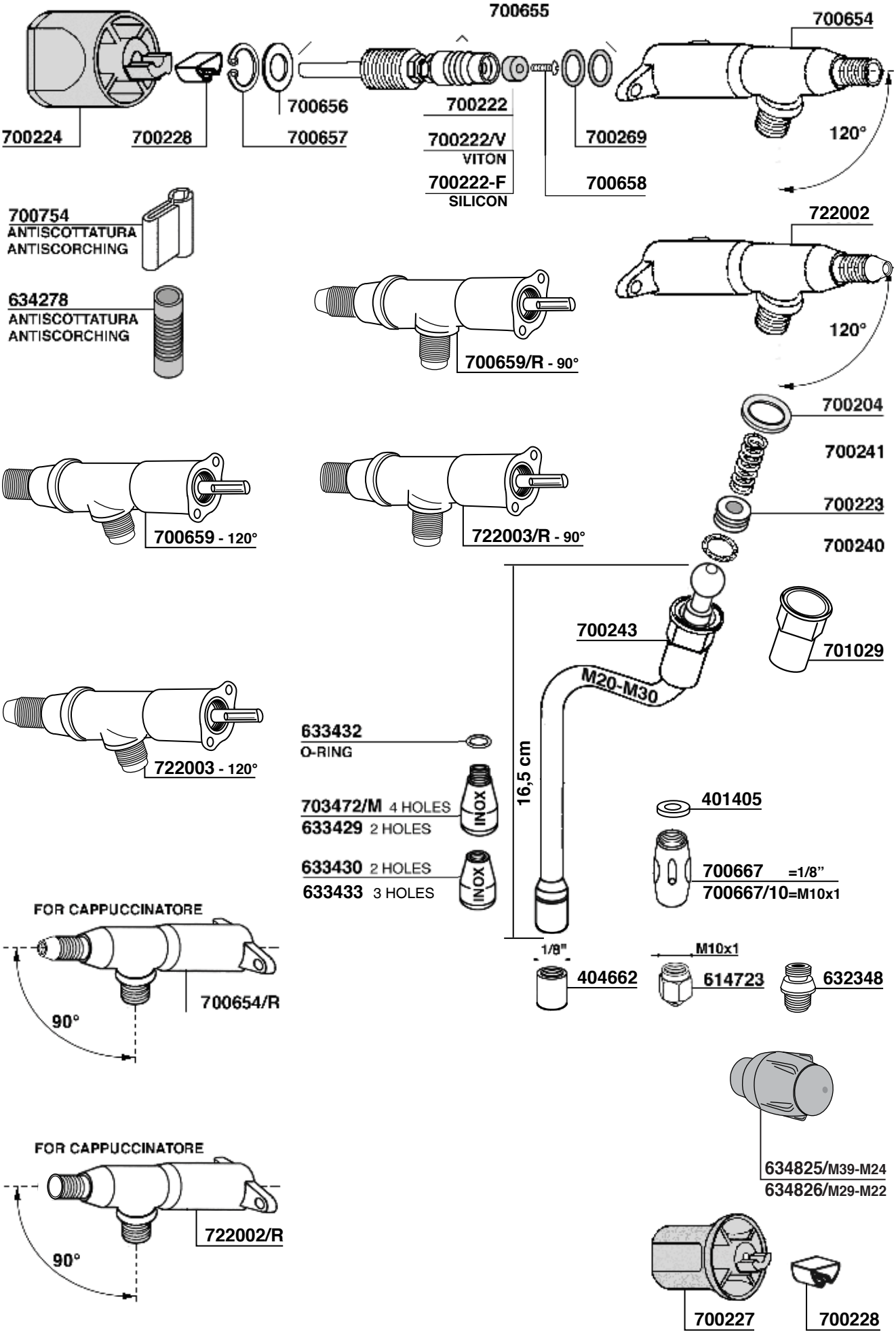

NUOVA RICAMBI PARTI COMPATIBILI CIMBALI Tav. 06

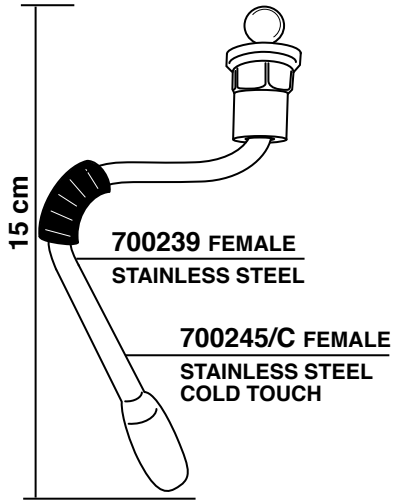

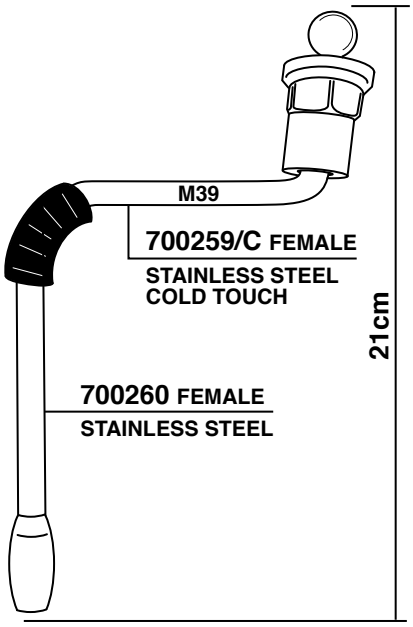

633434=3 HOLES
MALE

633434/4=4 HOLES
MALE

528874

632348

530138

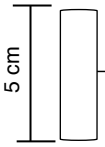

528875
STAINLESS STEEL
EXTENSION

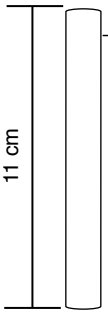

528876
STAINLESS STEEL
EXTENSION

528872 2 HOLES

528873 4 HOLES

633433=3 HOLES
FEMALE

633433/4=4 HOLES
FEMALE

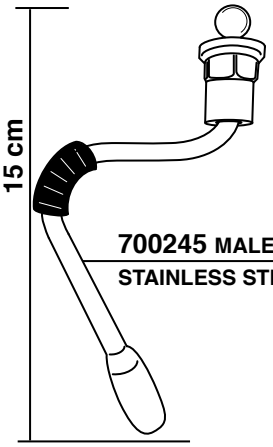

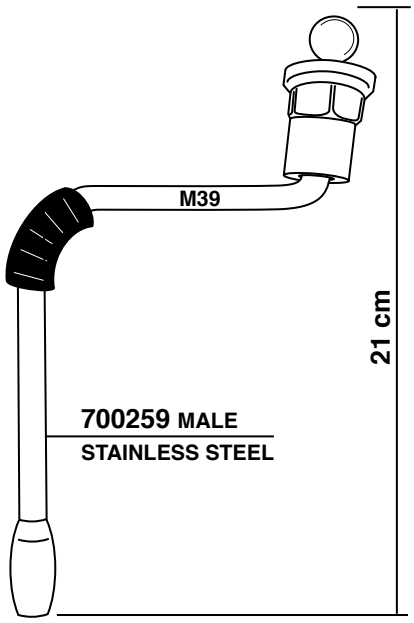

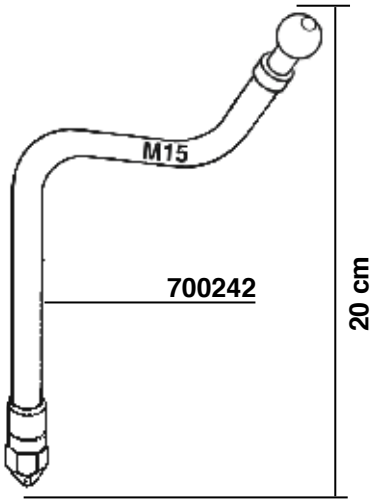

633433=3 HOLES
FEMALE

633433/4=4 HOLES
FEMALE

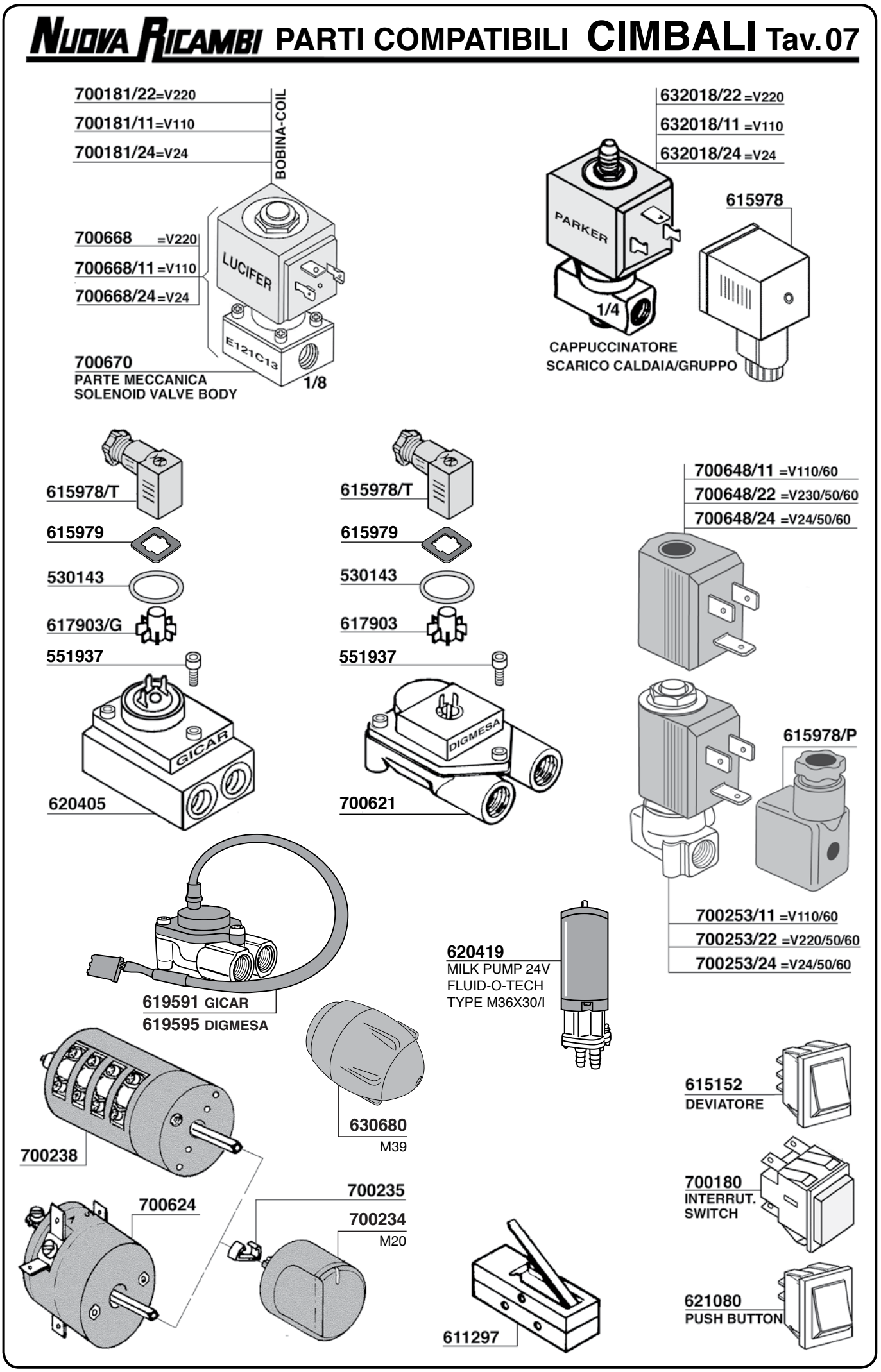
700181/22=V220
700181/11=V110
700181/24=V24
BOBINA-COIL
700668 =V220
700668/11 =V110
700668/24=V24
LUCIFER
E121C13
1/8
700670
PARTE MECCANICA
SOLENOID VALVE BODY
632018/22 =V220
632018/11 =V110
632018/24 =V24
PARKER
1/4
615978
CAPPUCCINATORE
SCARICO CALDAIA/GRUPPO
615978/T
615979
530143
617903/G
551937
GICAR
620405
615978/T
615979
530143
617903
551937
DIGMESA
700621
700648/11 =V110/60
700648/22 =V230/50/60
700648/24 =V24/50/60
615978/P
700253/11 =V110/60
700253/22 =V220/50/60
700253/24 =V24/50/60
619591 GICAR
619595 DIGMESA
620419
MILK PUMP 24V
FLUID-O-TECH
TYPE M36X30/I
630680
M39
700238
700624
700235
700234
M20
611297
615152
DEVIATORE
700180
INTERRUT.
SWITCH
621080
PUSH BUTTON

PUMP M32

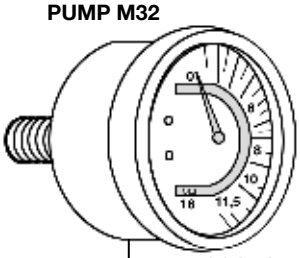

700678

BOILER M32

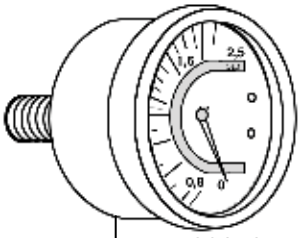

700679

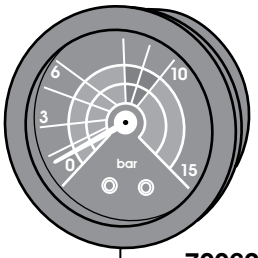

700620
PUMP

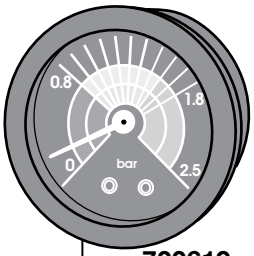

700619
BOILER

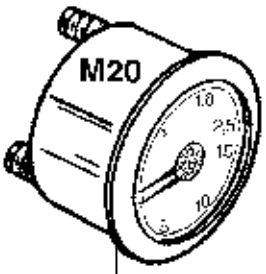

700874
DOPPIA SCALA
TWO SCALES

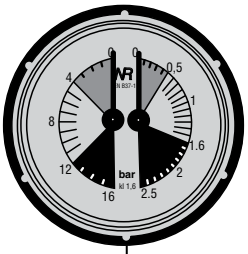

602001
DOPPIA SCALA
TWO SCALES

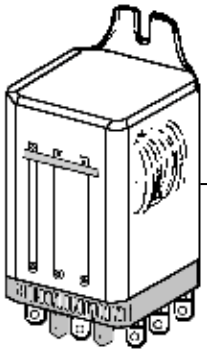

700652/22=V220
700652/24=V24
700652/12=V12 DC BISTRO

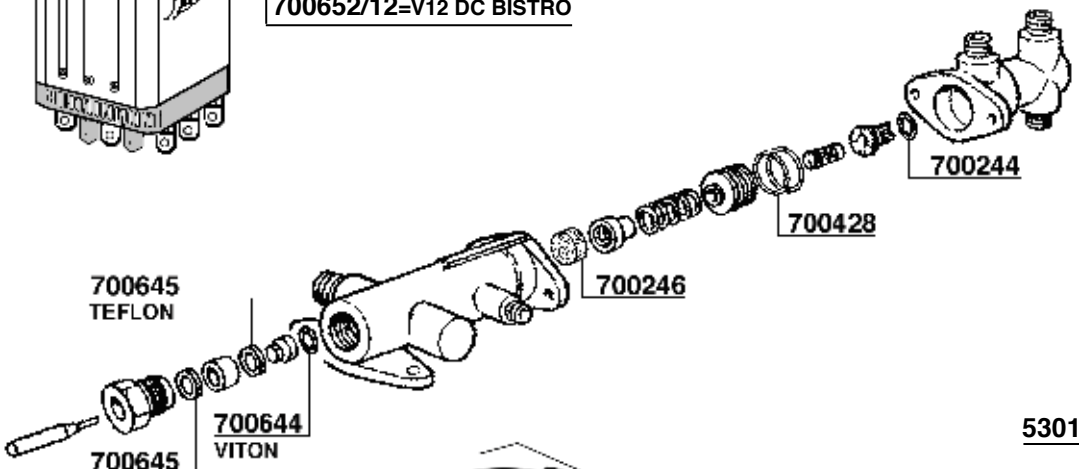

700244

700428

700246

700645
TEFLON

700644
VITON

700645
TEFLON

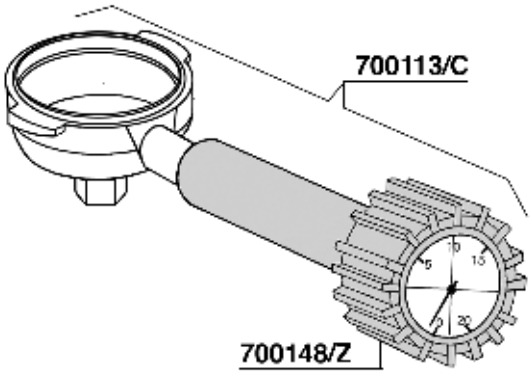

700113/C

700148/Z

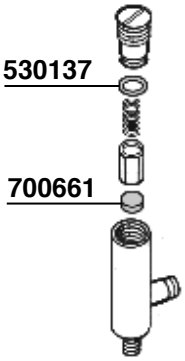

530137

700661

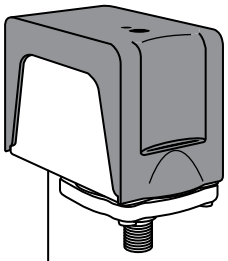

616597 CE/UL

700210=GR/1 W1700 V220/380
700212=GR/3 W5790 V220/380
700209=GR/2 W3750 V220/380
700213=ALINA W2850 V220/380

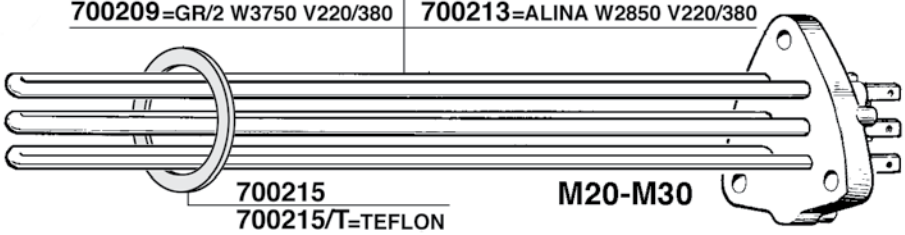

700215
700215/T=TEFLON
M20-M30

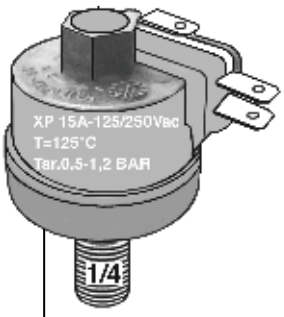

700662

700214

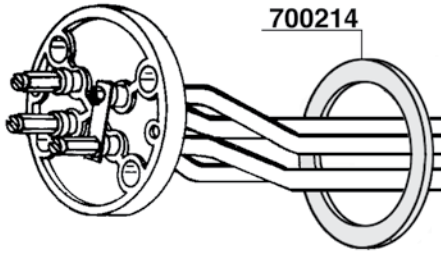

700207/22=GR/1 W2700 V220
700208/22=GR/2 W4000 V220
M15

700215
700215/T=TEFLON

700647/22=W1300 V220
700647/11 =W1300 V110

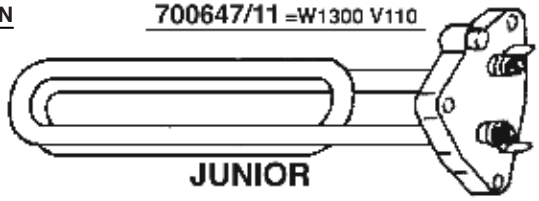

JUNIOR

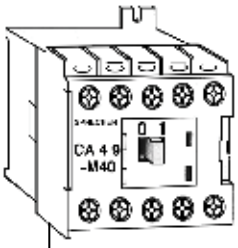

700653/22=V220/50 M30 CLASSIC
700653/12=V12 DC M30-DOSATRON
700653/24=V24 DC

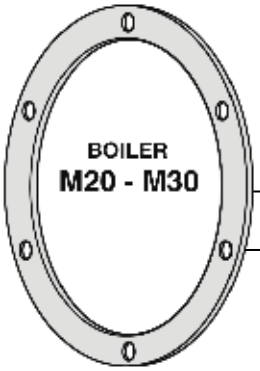

BOILER
M20 - M30

700252
700229
700229/T
TEFLON

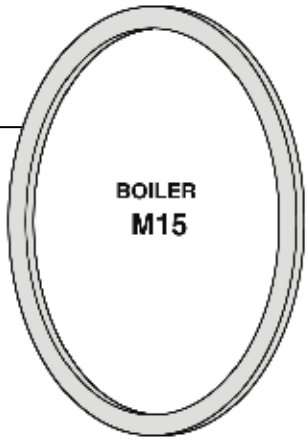

BOILER
M15

700663=V220

703237

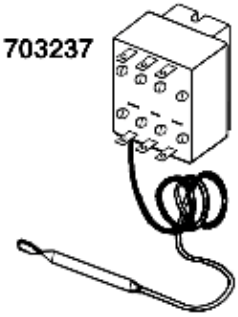

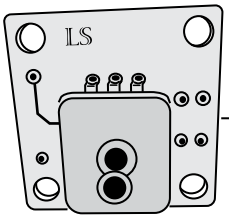

602000
TRASDUTTORE PRESSIONE
PRESSURE SENSOR

MAGNETE 700672

GALLEGGIANTE 700669

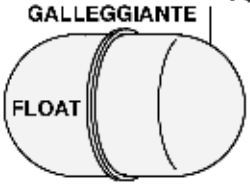

700651

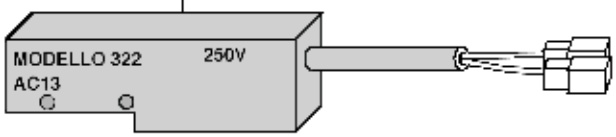

620466

700097

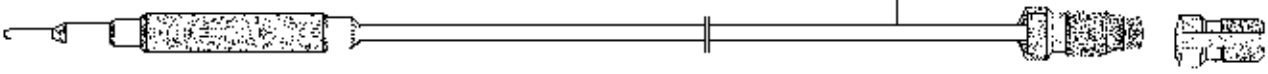

NUOVA RICAMBI PARTI COMPATIBILI CIMBALI Tav. 10

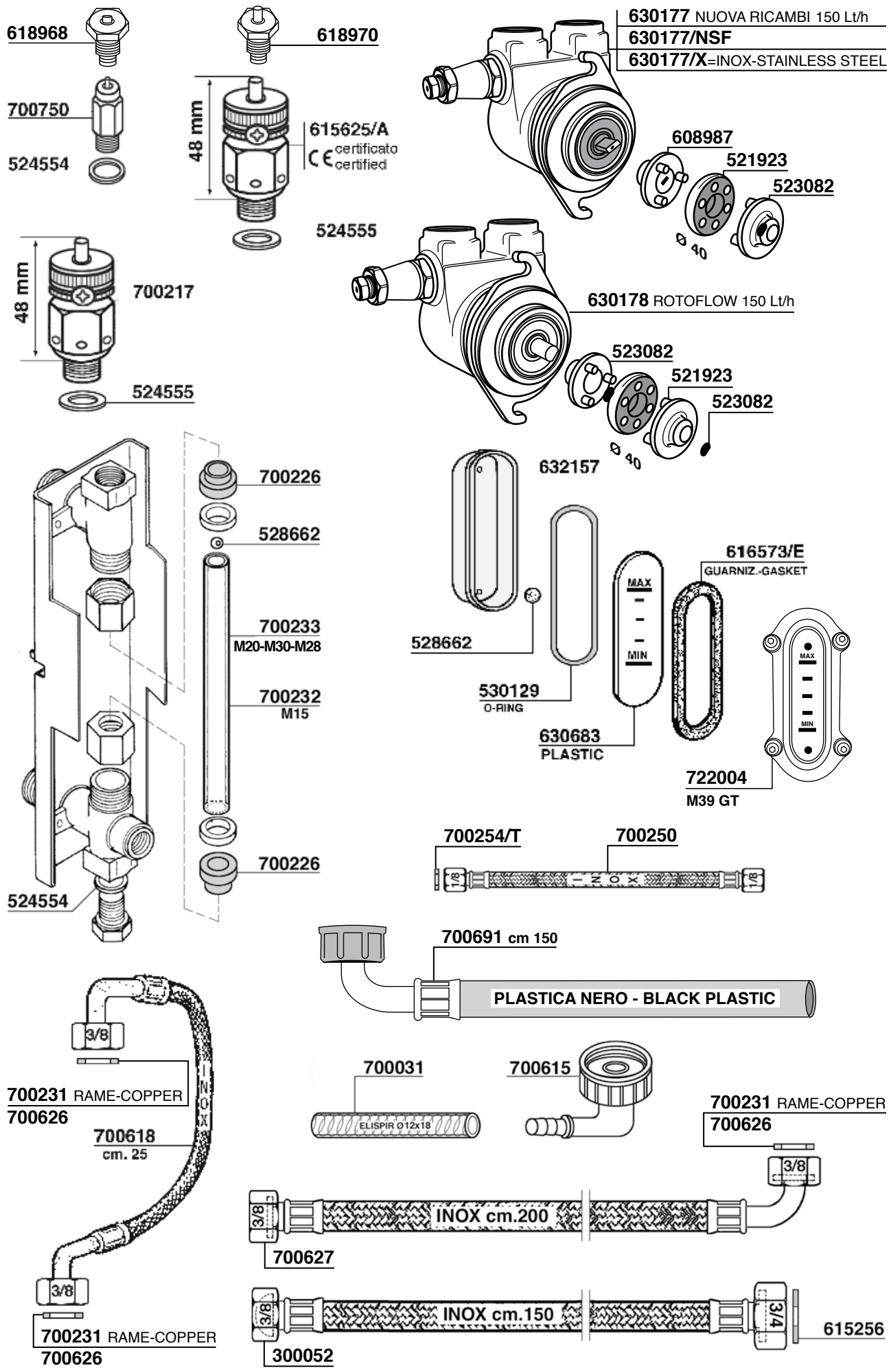

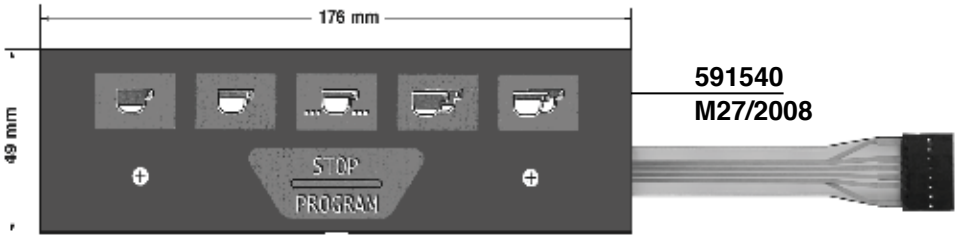

591540
M27/2008

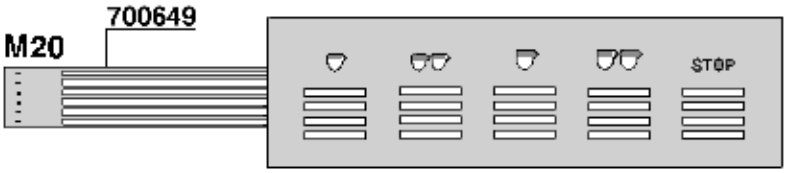

700649
M20

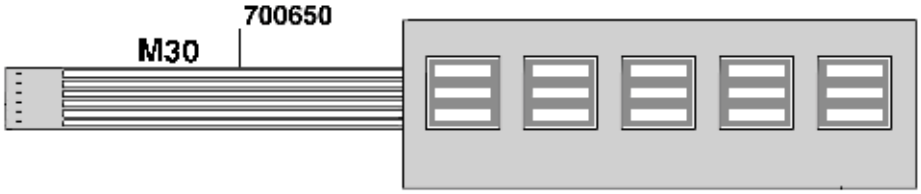

700650
M30

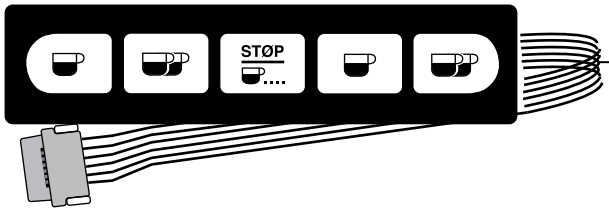

591541
M21 JUNIOR - M22

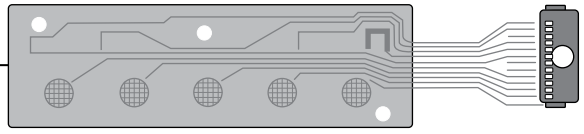

591542
M32

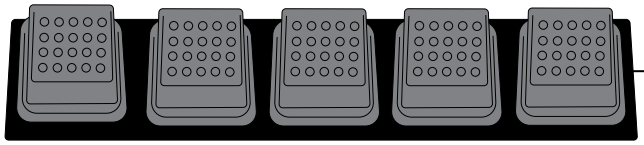

591543
M32 DOSATRON

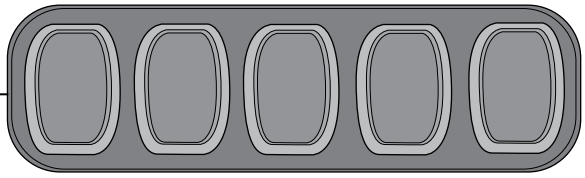

591544
M39

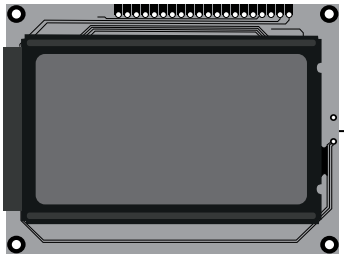

700608
M39 - M39GT

591545
M39 GT CLASS

591546
M39 DOSATRON R - M39 GT

591547
M39 CLASSIC

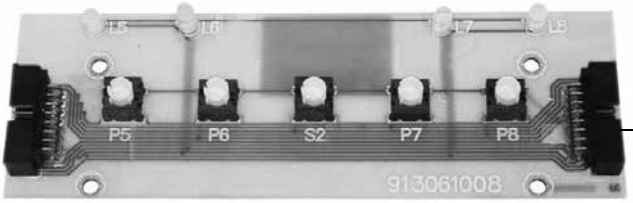

591548
M39 DOSATRON

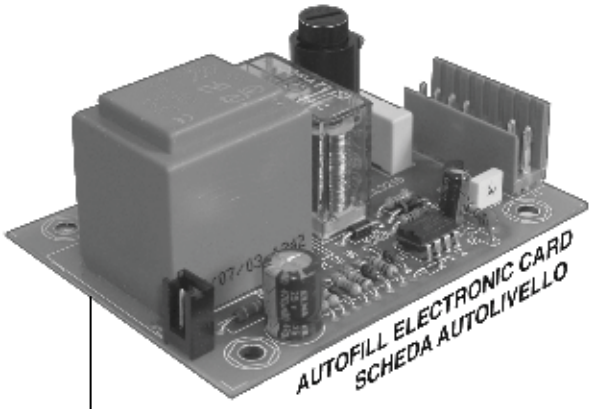

591000
V220 M27

SCHEDA ELETTRONICA UNIFICATA
UNIFIED ELECTRONIC CARD

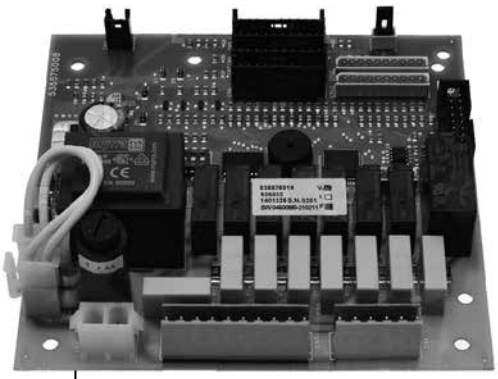

591549
M22-M24-M27/2007-M29-M39

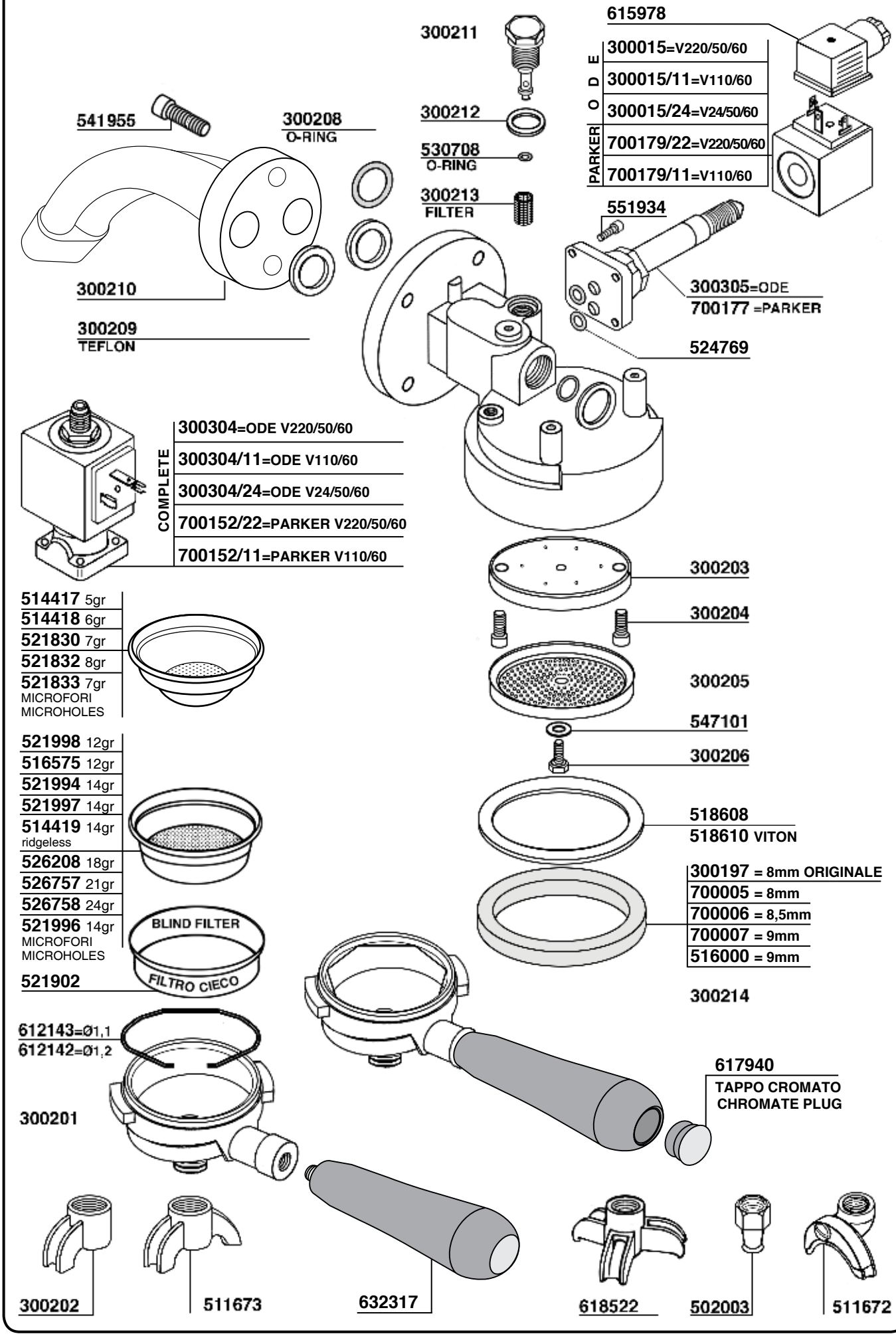
615978
300211
300015=V220/50/60
300015/11=V110/60
300015/24=V24/50/60
700179/22=V220/50/60
700179/11=V110/60
ODE
PARKER
541955
300208
O-RING
300212
530708
O-RING
300213
FILTER
551934
300305=ODE
700177 =PARKER
300210
300209
TEFLON
524769
300304=ODE V220/50/60
300304/11=ODE V110/60
300304/24=ODE V24/50/60
700152/22=PARKER V220/50/60
700152/11=PARKER V110/60
COMPLETE
300203
300204
514417 5gr
514418 6gr
521830 7gr
521832 8gr
521833 7gr
MICROFORI
MICROHOLES
300205
547101
300206
521998 12gr
516575 12gr
521994 14gr
521997 14gr
514419 14gr
ridgeless
526208 18gr
526757 21gr
526758 24gr
521996 14gr
MICROFORI
MICROHOLES
518608
518610 VITON
300197 = 8mm ORIGINALE
700005 = 8mm
700006 = 8,5mm
700007 = 9mm
516000 = 9mm
BLIND FILTER
FILTRO CIECO
521902
300214
612143=Ø1,1
612142=Ø1,2
300201
617940
TAPPO CROMATO
CHROMATE PLUG
300202
511673
632317
618522
502003
511672

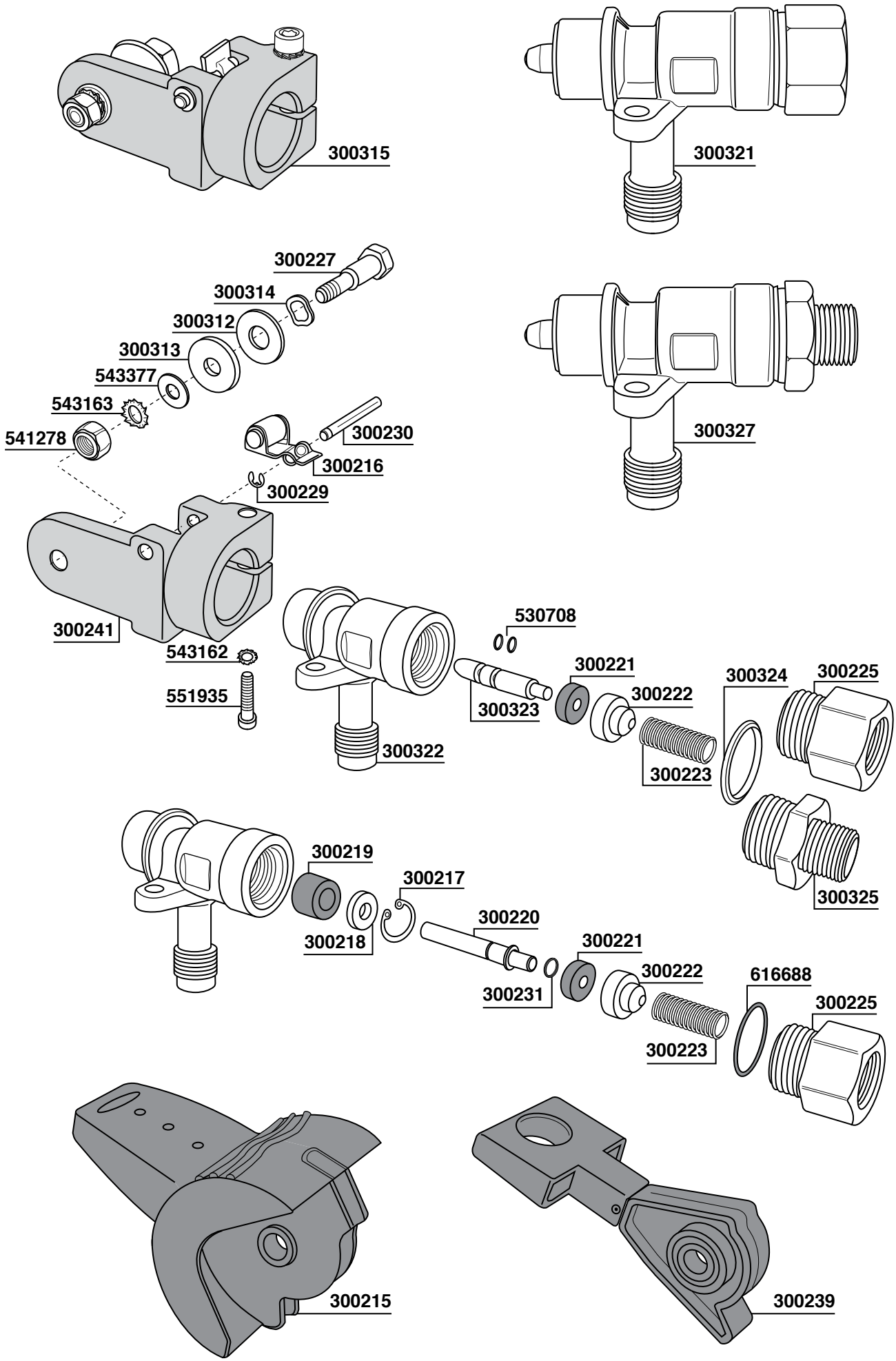
300315
300321
300227
300314
300312
300313
543377
543163
541278
300230
300216
300229
300327
300241
543162
551935
530708
300221
300324
300225
300323
300222
300322
300223
300325
300219
300217
300220
300218
300221
300222
616688
300231
300225
300223
300215
300239

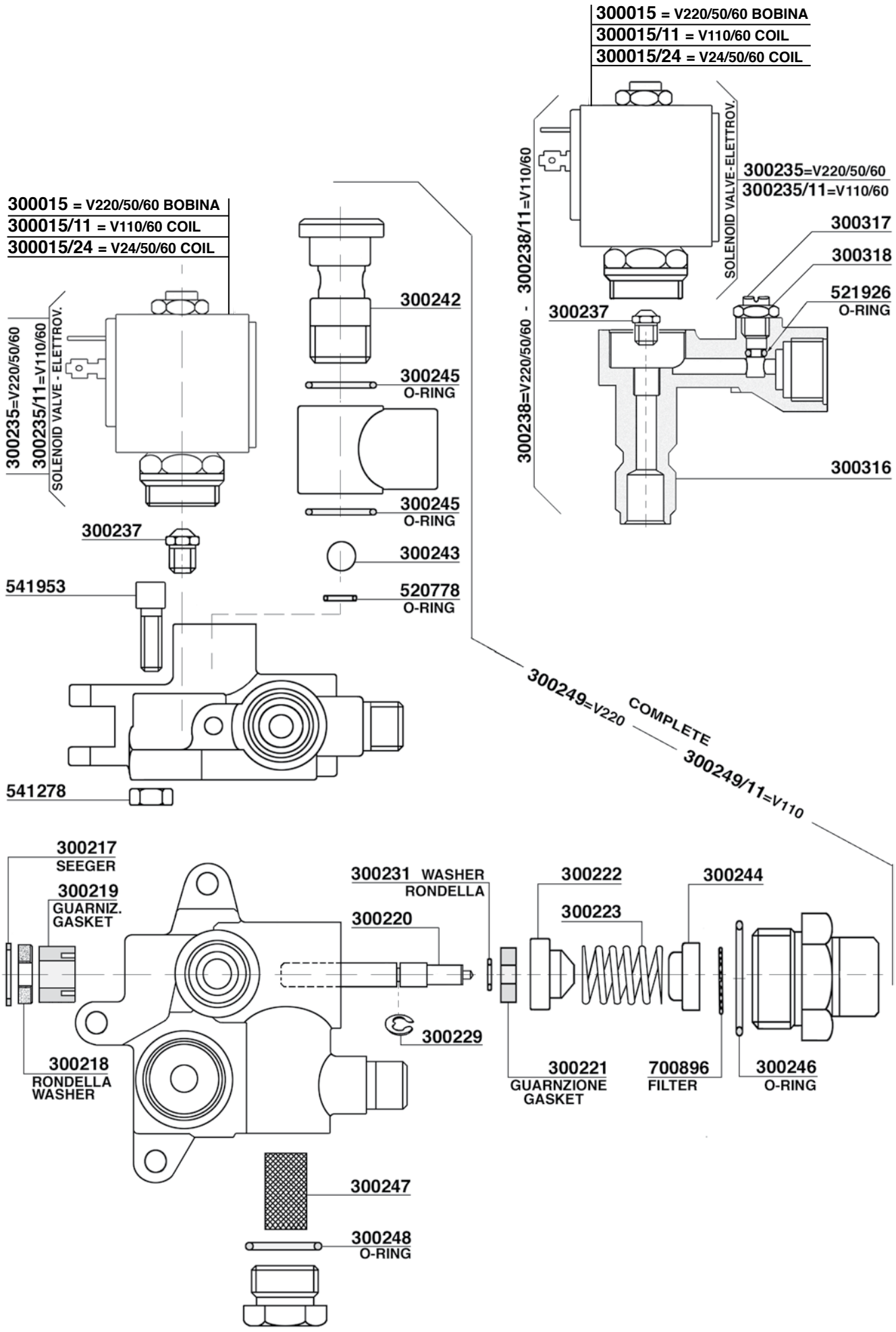
300015 = V220/50/60 BOBINA
300015/11 = V110/60 COIL
300015/24 = V24/50/60 COIL
300235=V220/50/60
300235/11=V110/60
SOLENOID VALVE - ELETTROV.
300238/11=V110/60
300238=V220/50/60 -
SOLENOID VALVE-ELETTROV.
300317
300318
521926
O-RING
300237
300316
300242
300245
O-RING
300245
O-RING
300243
520778
O-RING
541953
541278
300249=V220
COMPLETE
300249/11=V110
300217
SEEGER
300219
GUARNIZ.
GASKET
300231 WASHER
RONDELLA
300220
300222
300223
300244
300229
300218
RONDELLA
WASHER
300221
GUARNZIONE
GASKET
700896
FILTER
300246
O-RING
300247
300248
O-RING

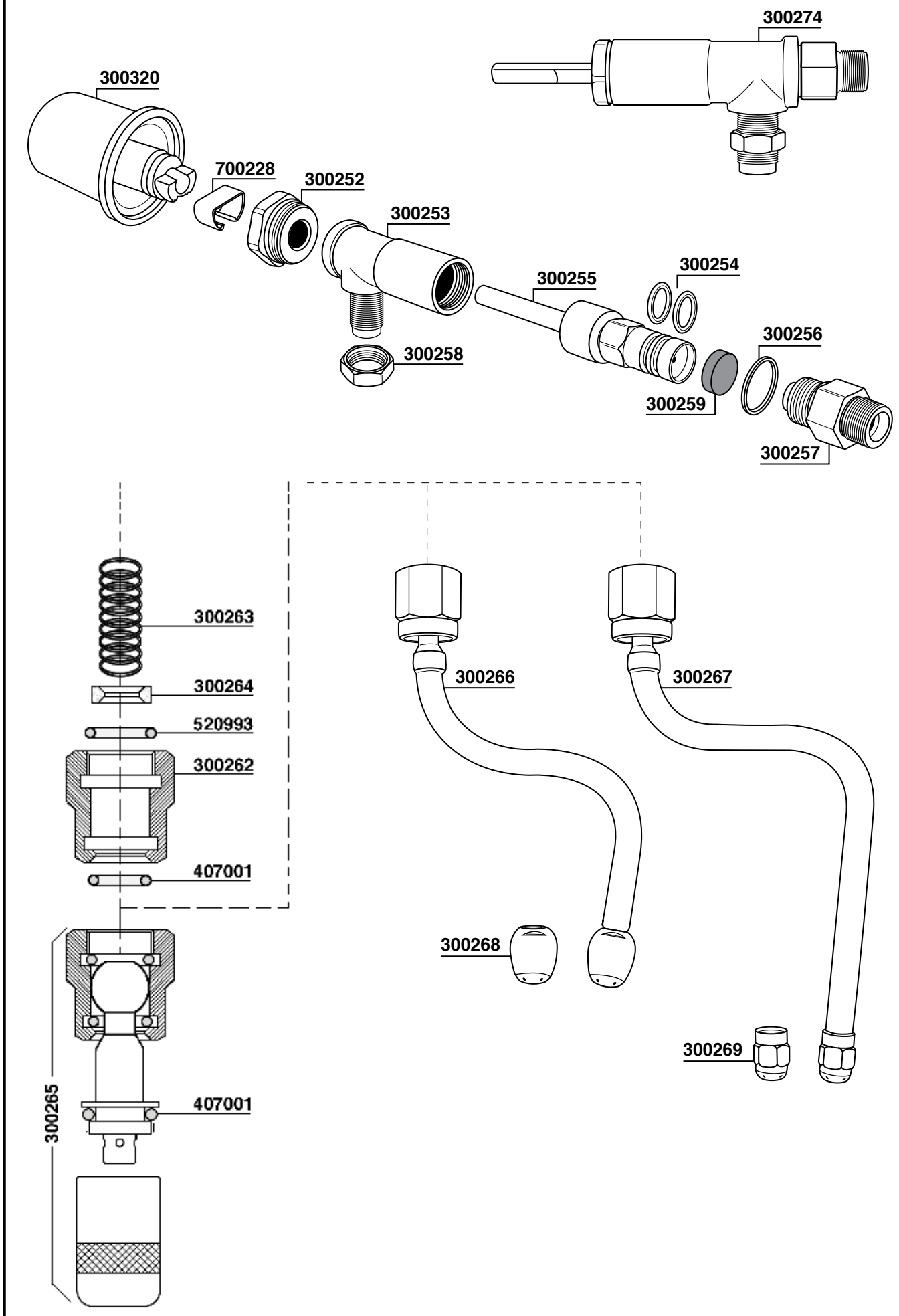
300274
300320
700228
300252
300253
300255
300254
300256
300258
300259
300257
300263
300264
520993
300262
407001
300266
300267
300268
300269
300265
407001

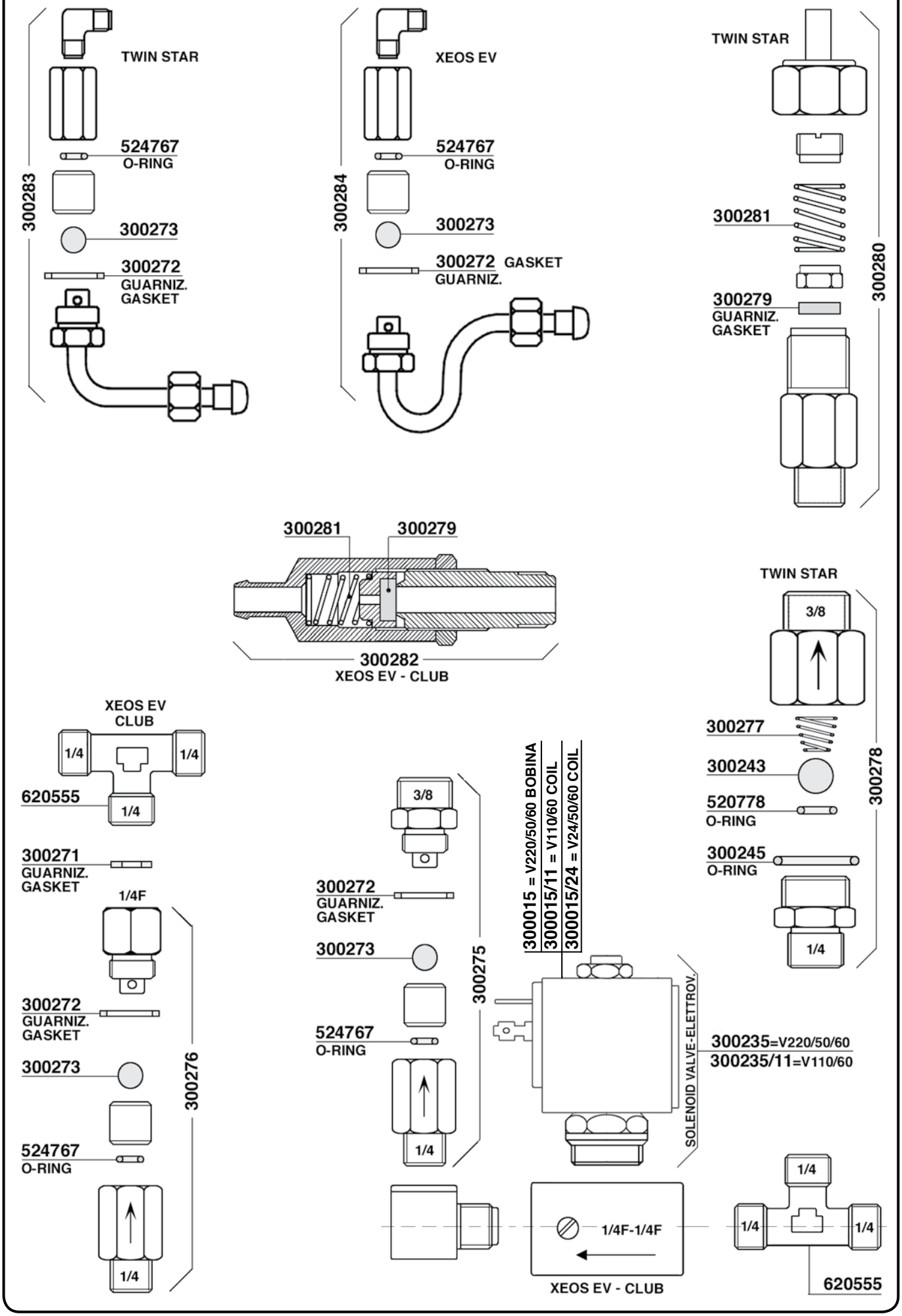
TWIN STAR
524767
O-RING
300283
300273
300272
GUARNIZ.
GASKET
XEOS EV
524767
O-RING
300284
300273
300272 GASKET
GUARNIZ.
TWIN STAR
300281
300280
300279
GUARNIZ.
GASKET
300281
300279
300282
XEOS EV - CLUB
TWIN STAR
3/8
300277
300243
520778
O-RING
300245
O-RING
1/4
300278
XEOS EV
CLUB
1/4
1/4
620555
1/4
300271
GUARNIZ.
GASKET
1/4F
300272
GUARNIZ.
GASKET
300273
524767
O-RING
1/4
300276
3/8
300272
GUARNIZ.
GASKET
300273
524767
O-RING
1/4
300275
300015 = V220/50/60 BOBINA
300015/11 = V110/60 COIL
300015/24 = V24/50/60 COIL
SOLENOID VALVE-ELETTROV.
300235=V220/50/60
300235/11=V110/60
1/4F-1/4F
XEOS EV - CLUB
1/4
1/4
1/4
620555

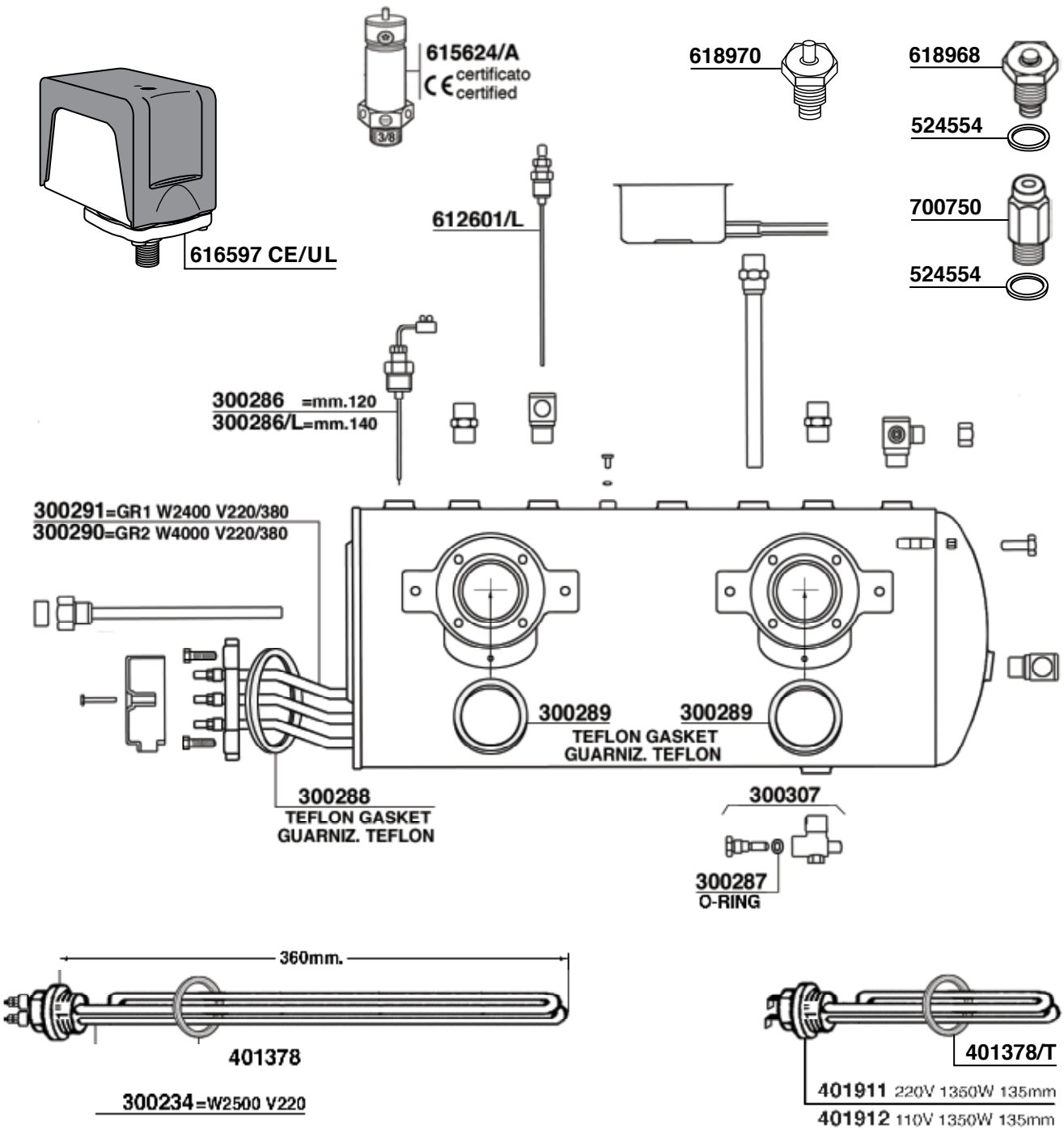
615624/A
certificato
certified
3/8
618970
618968
524554
616597 CE/UL
612601/L
700750
524554
300286 =mm.120
300286/L=mm.140
300291=GR1 W2400 V220/380
300290=GR2 W4000 V220/380
300289
300289
TEFLON GASKET
GUARNIZ. TEFLON
300288
TEFLON GASKET
GUARNIZ. TEFLON
300307
300287
O-RING
360mm.
401378
300234=W2500 V220
401378/T
401911 220V 1350W 135mm
401912 110V 1350W 135mm

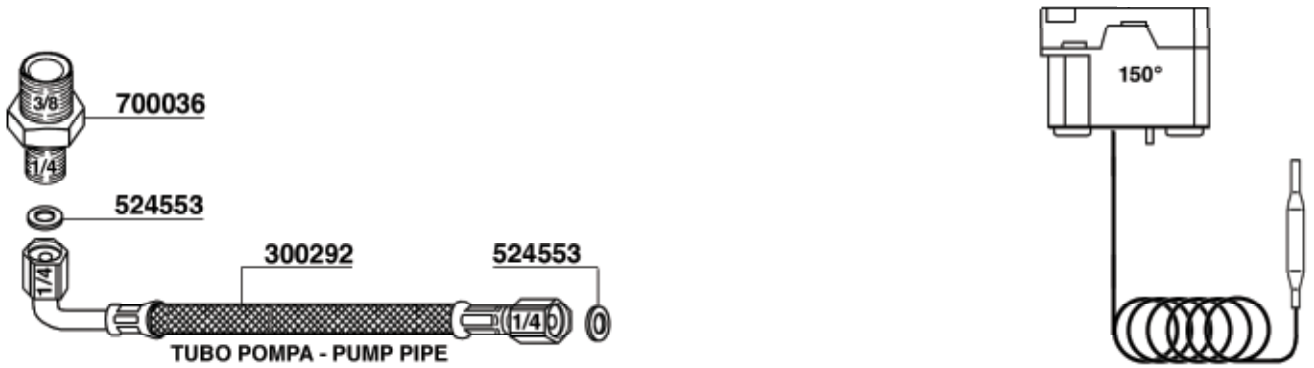
3/8
700036
1/4
524553
300292
524553
1/4
1/4
TUBO POMPA - PUMP PIPE
150°

CONTI

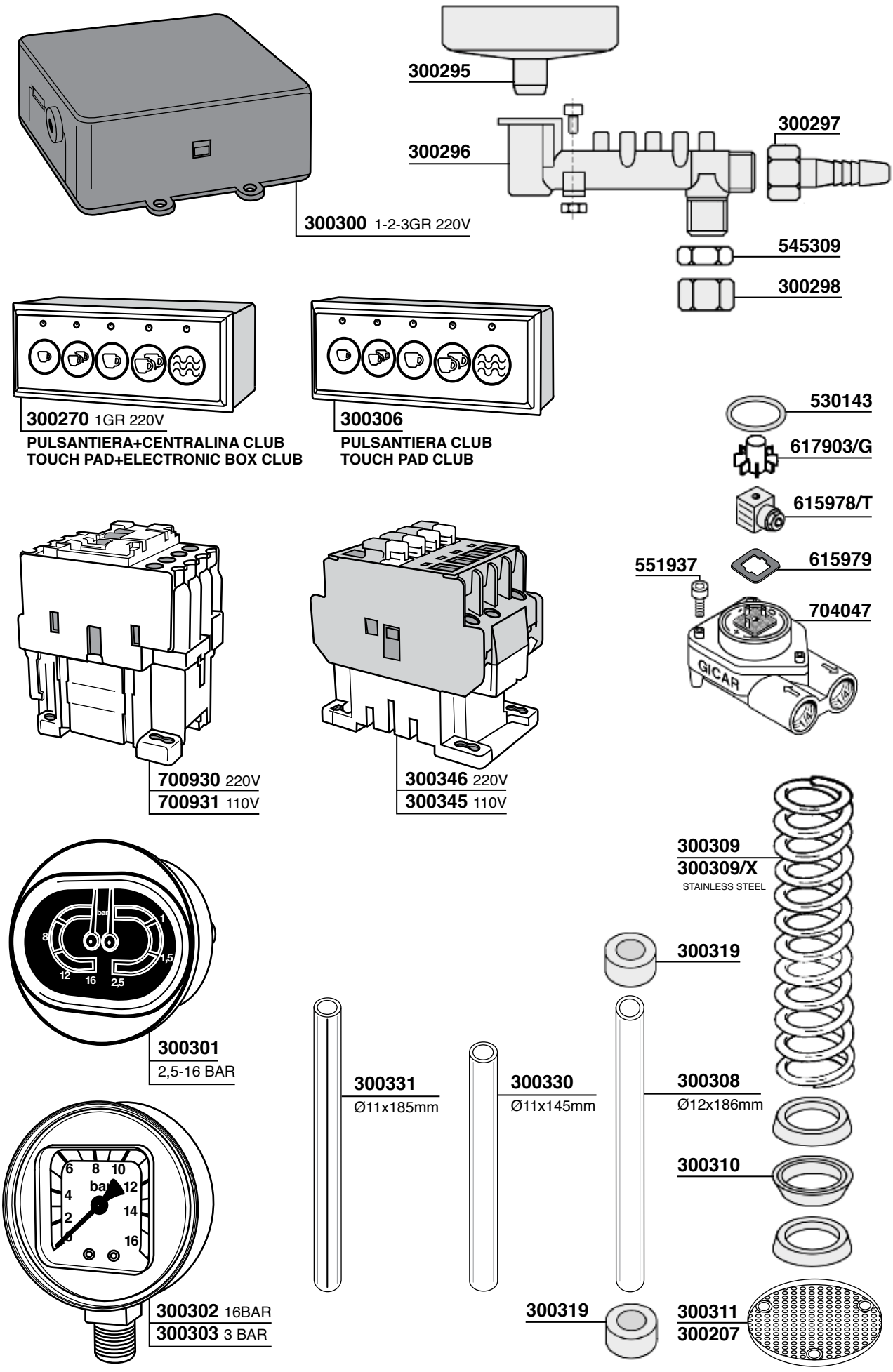
300295
300296
300297
300300 1-2-3GR 220V
545309
300298
300270 1GR 220V
PULSANTIERA+CENTRALINA CLUB
TOUCH PAD+ELECTRONIC BOX CLUB
300306
PULSANTIERA CLUB
TOUCH PAD CLUB
530143
617903/G
615978/T
615979
551937
704047
GICAR
700930 220V
700931 110V
300346 220V
300345 110V
300309
300309/X
STAINLESS STEEL
300319
300301
2,5-16 BAR
300331
Ø11x185mm
300330
Ø11x145mm
300308
Ø12x186mm
300310
300302 16BAR
300303 3 BAR
300319
300311
300207

DALLA CORTE

Tav.01

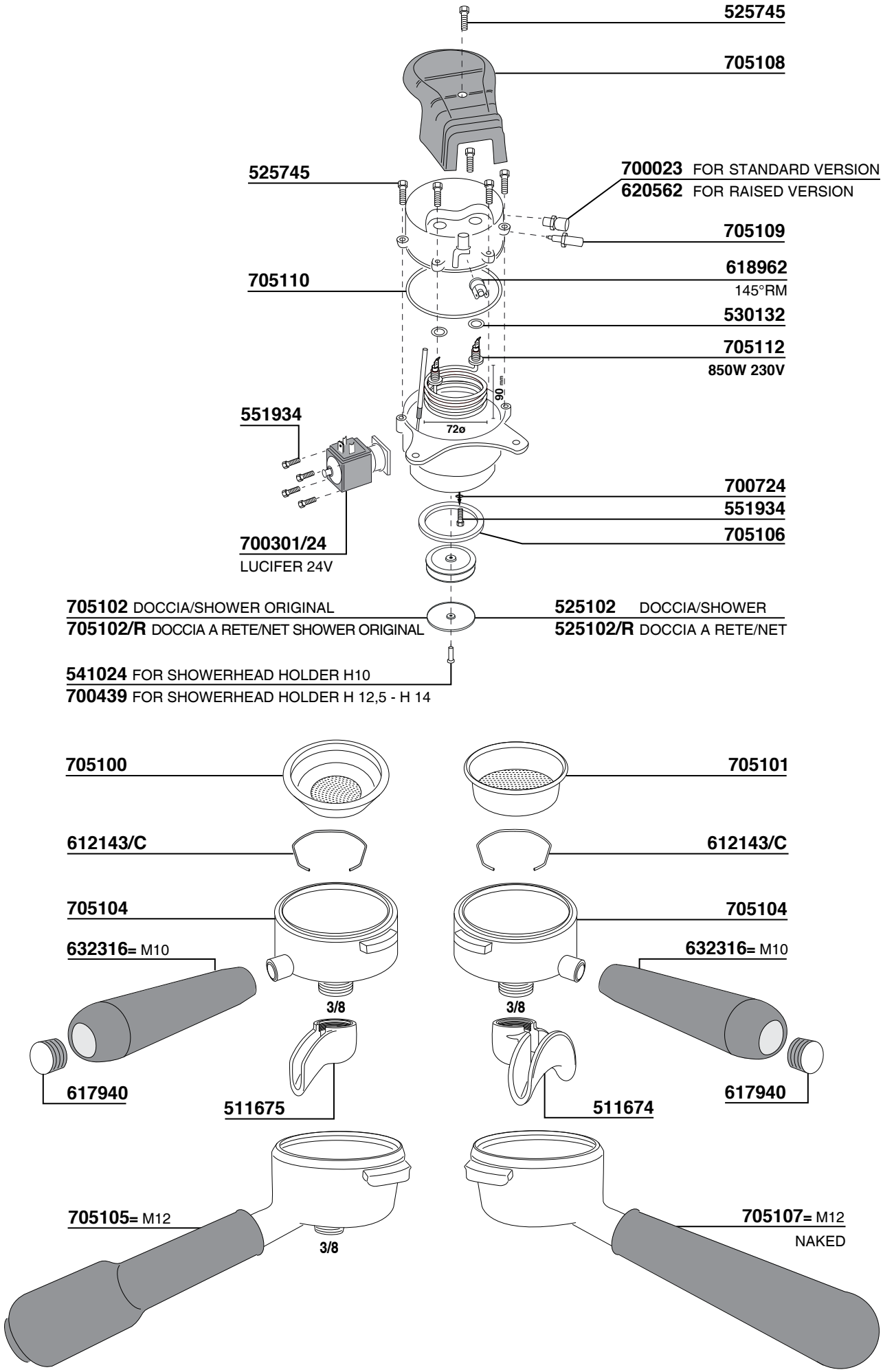

DALLA CORTE

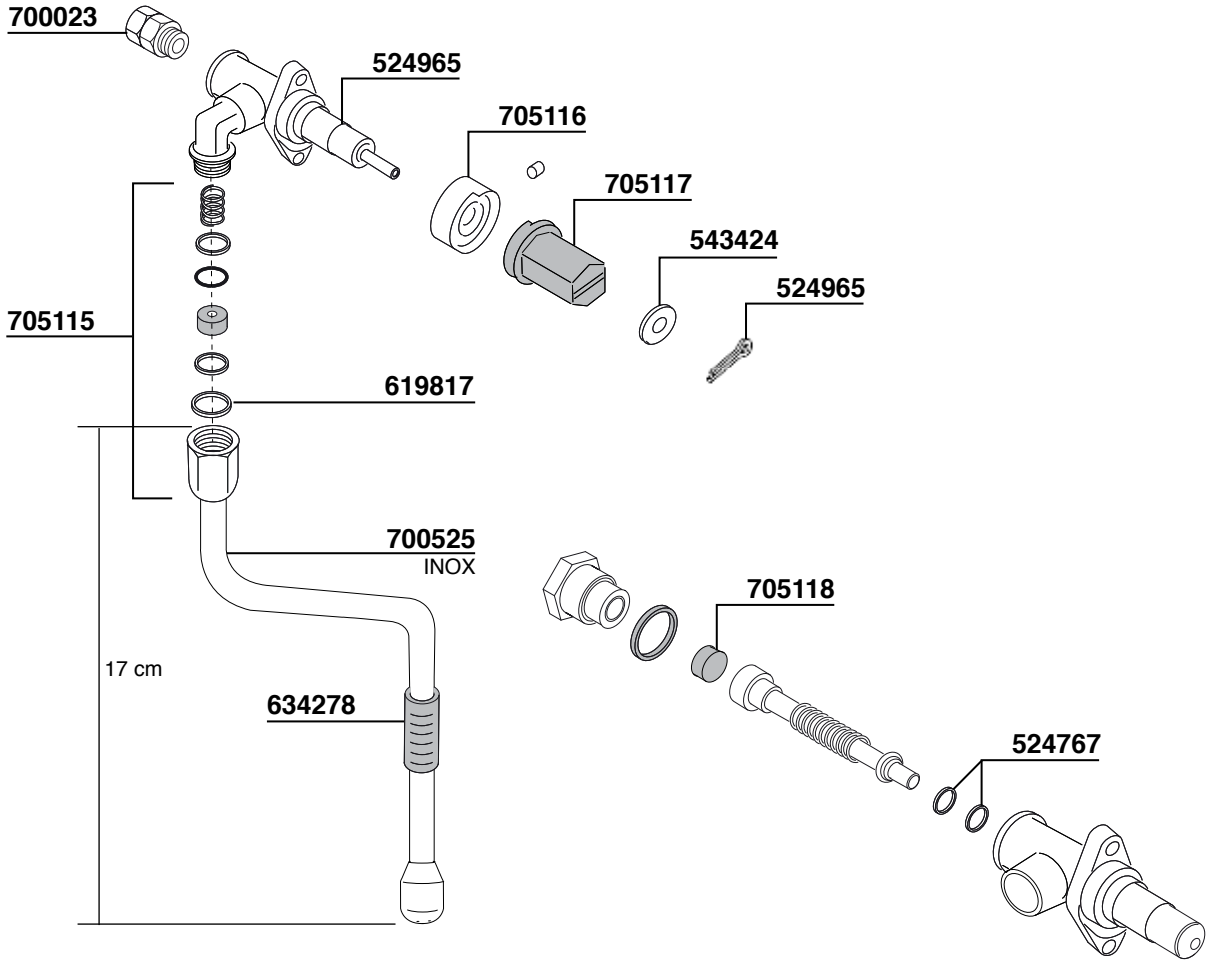
700023
524965
705116
705117
543424
524965
705115
619817
700525
INOX
17 cm
634278
705118
524767

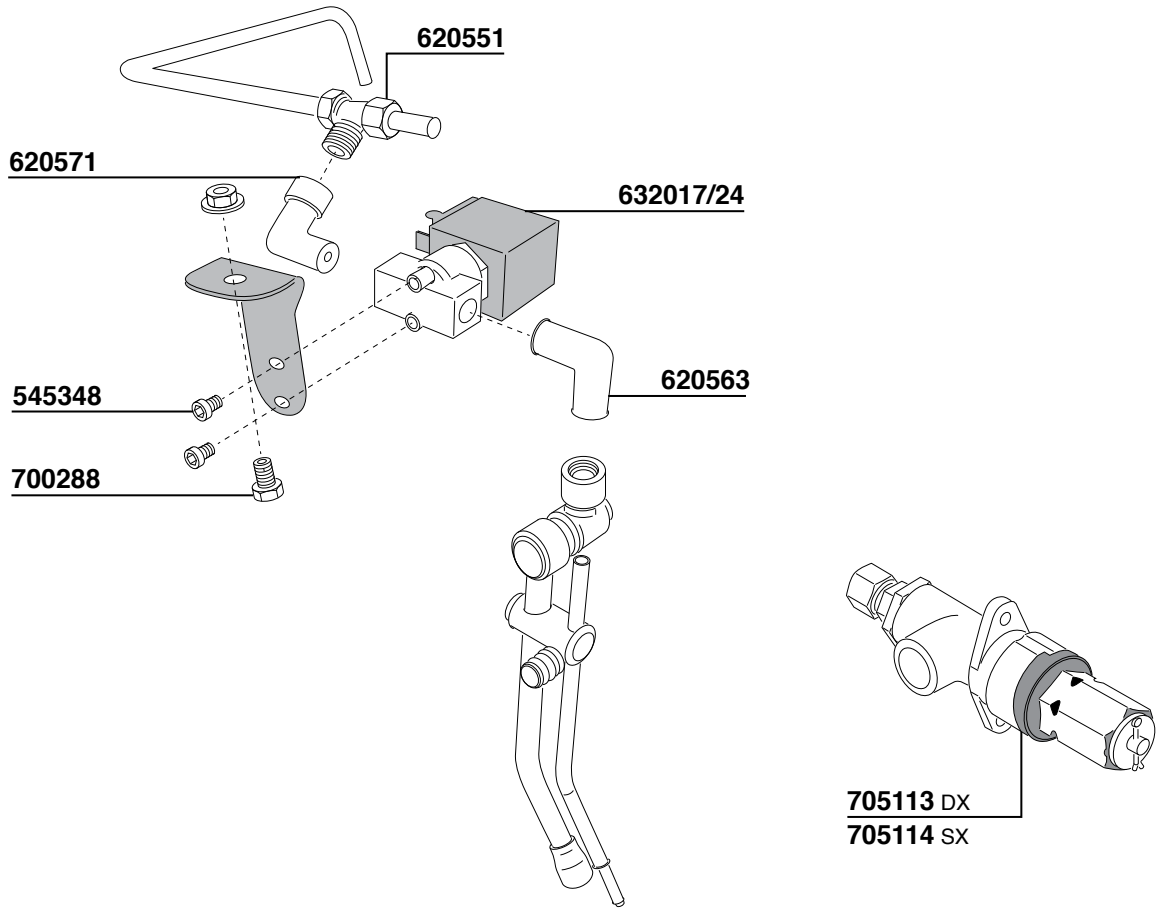
620551
620571
632017/24
620563
545348
700288
705113 DX
705114 SX

DALLA CORTE

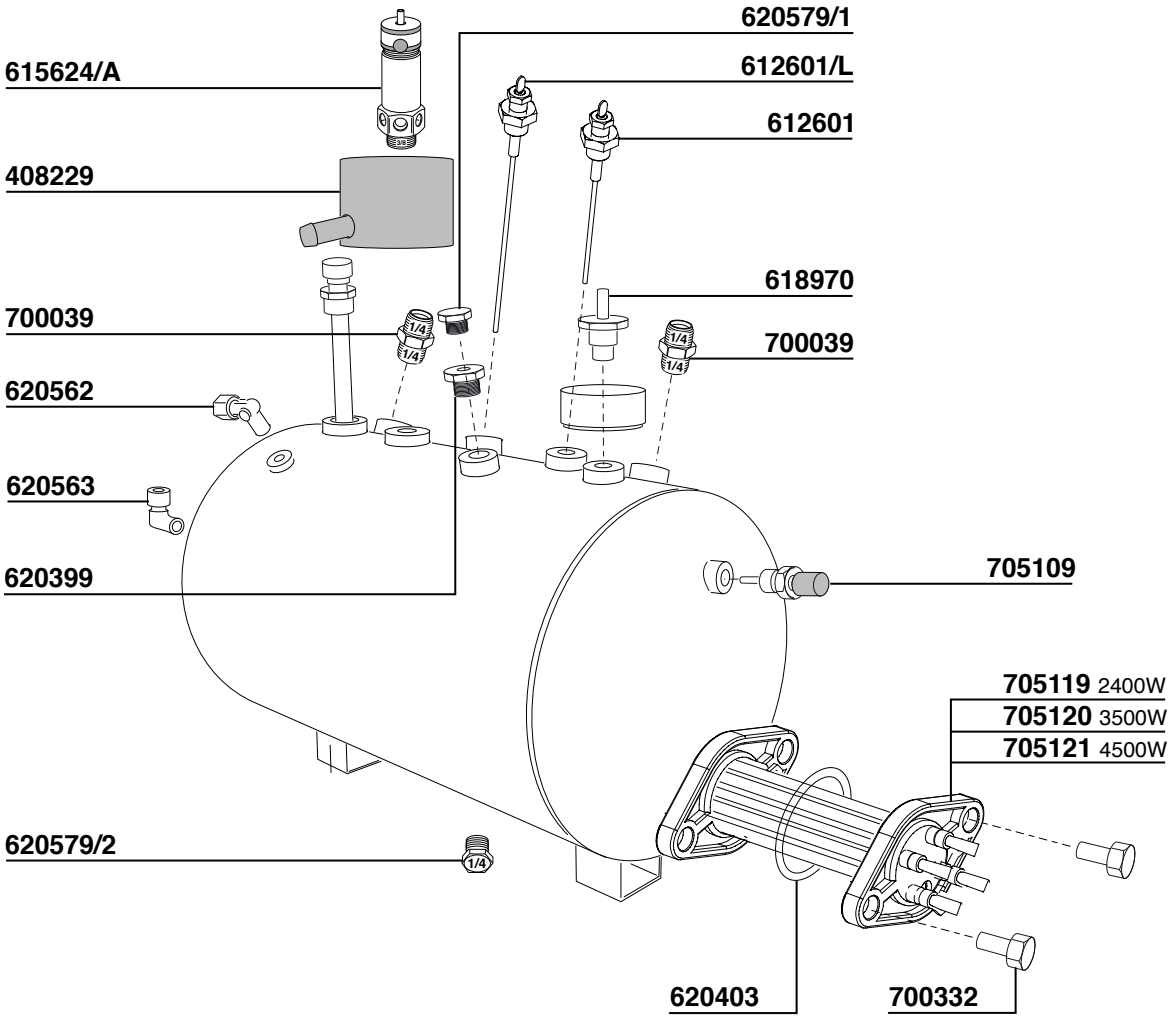
620579/1
615624/A
612601/L
612601
408229
618970
700039
700039
620562
620563
620399
705109
705119 2400W
705120 3500W
705121 4500W
620579/2
620403
700332

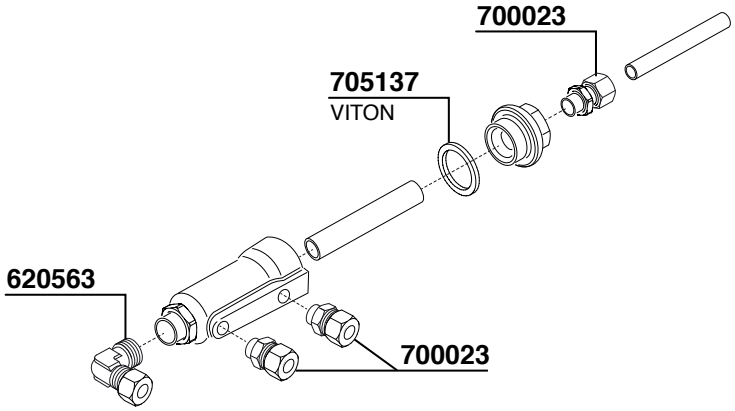
700023
705137
VITON
620563
700023

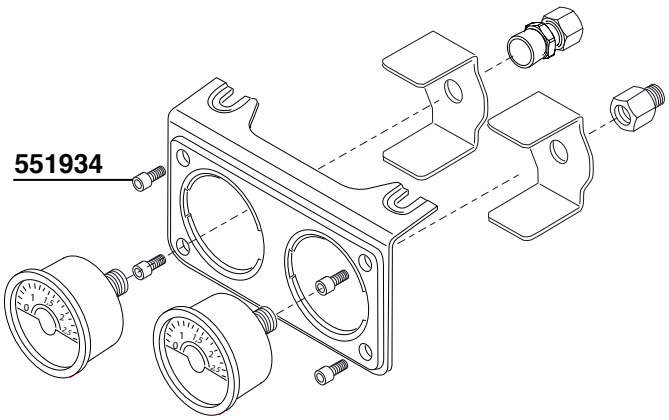
551934

DALLA CORTE

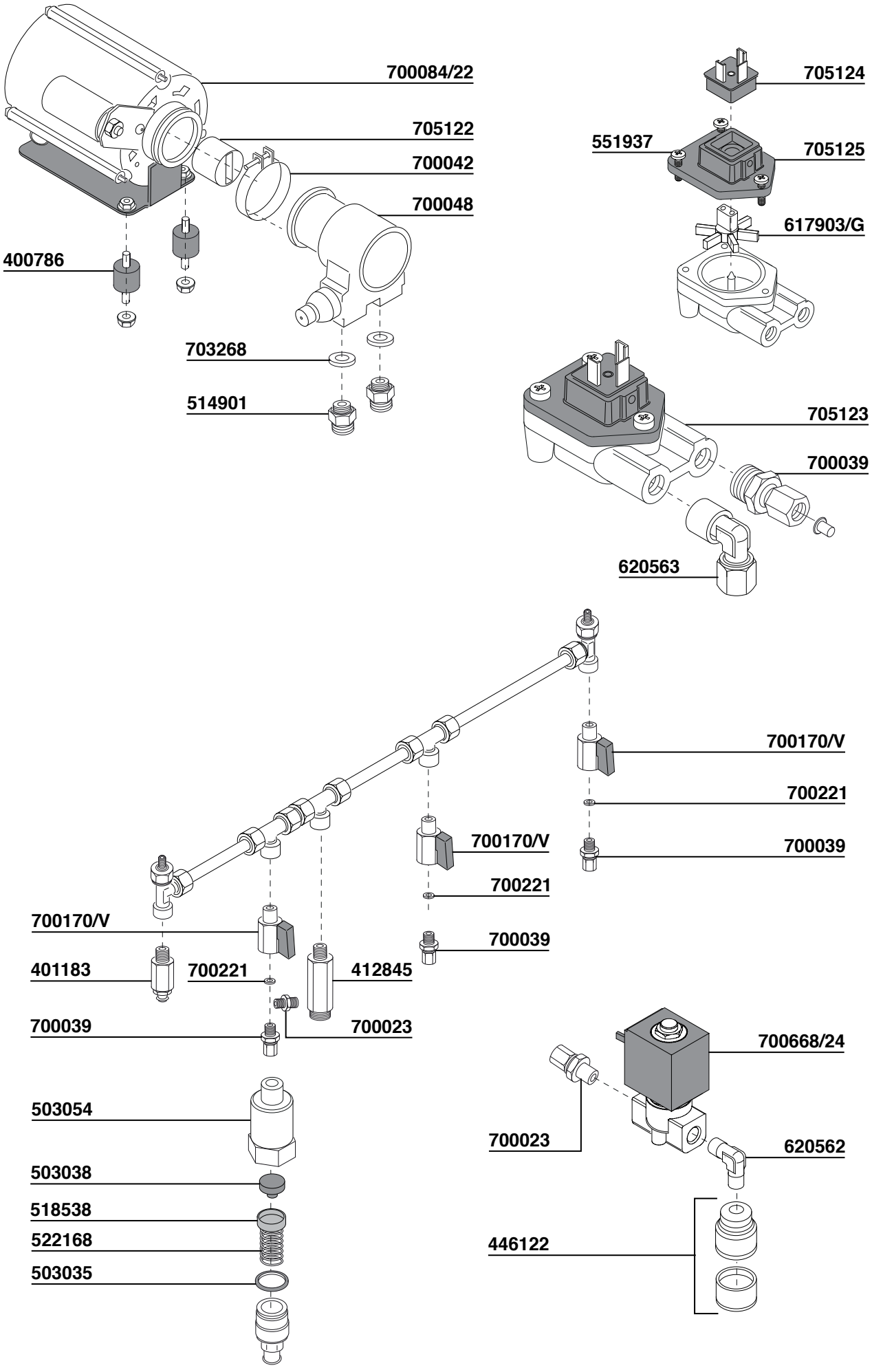
700084/22
705122
700042
700048
400786
703268
514901
705124
551937
705125
617903/G
705123
700039
620563
700170/V
700221
700039
700170/V
700221
700039
700170/V
401183
700221
412845
700039
700023
503054
503038
518538
522168
503035
700668/24
700023
620562
446122

DALLA CORTE

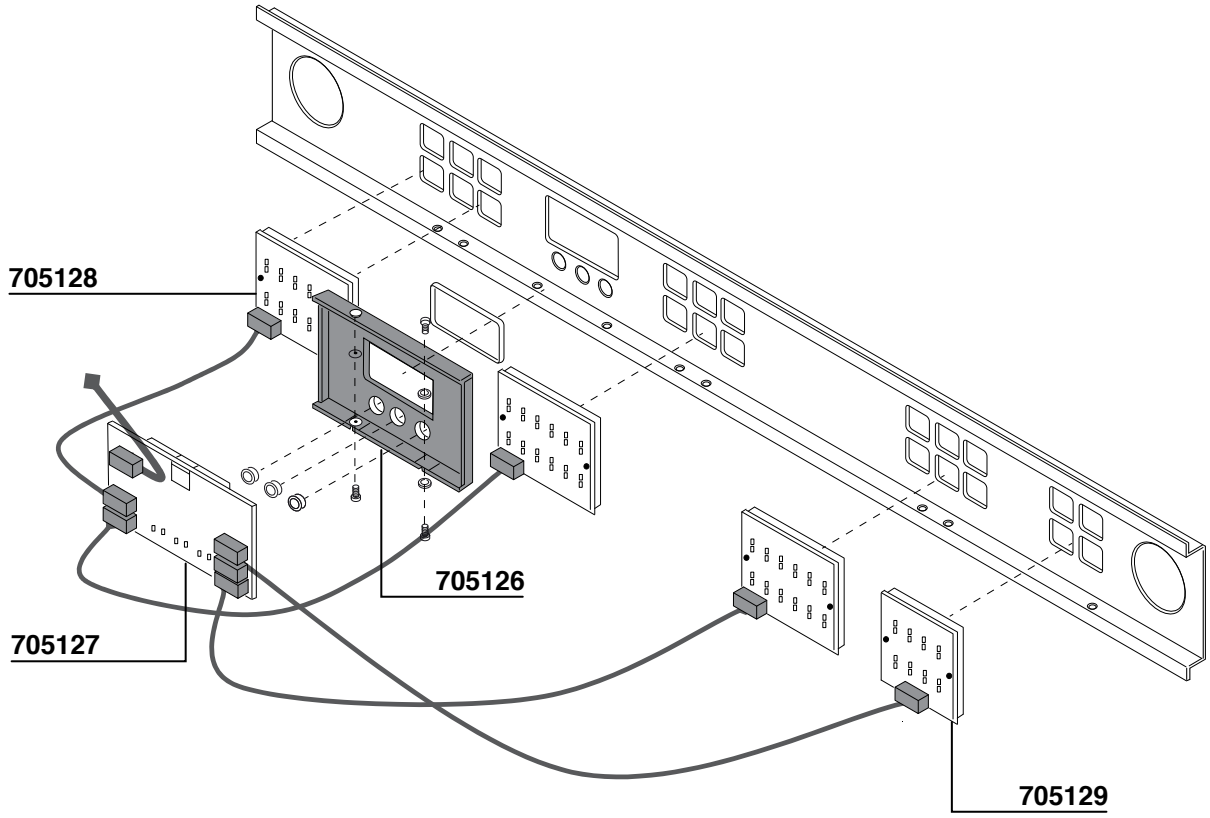
705128
705126
705127
705129

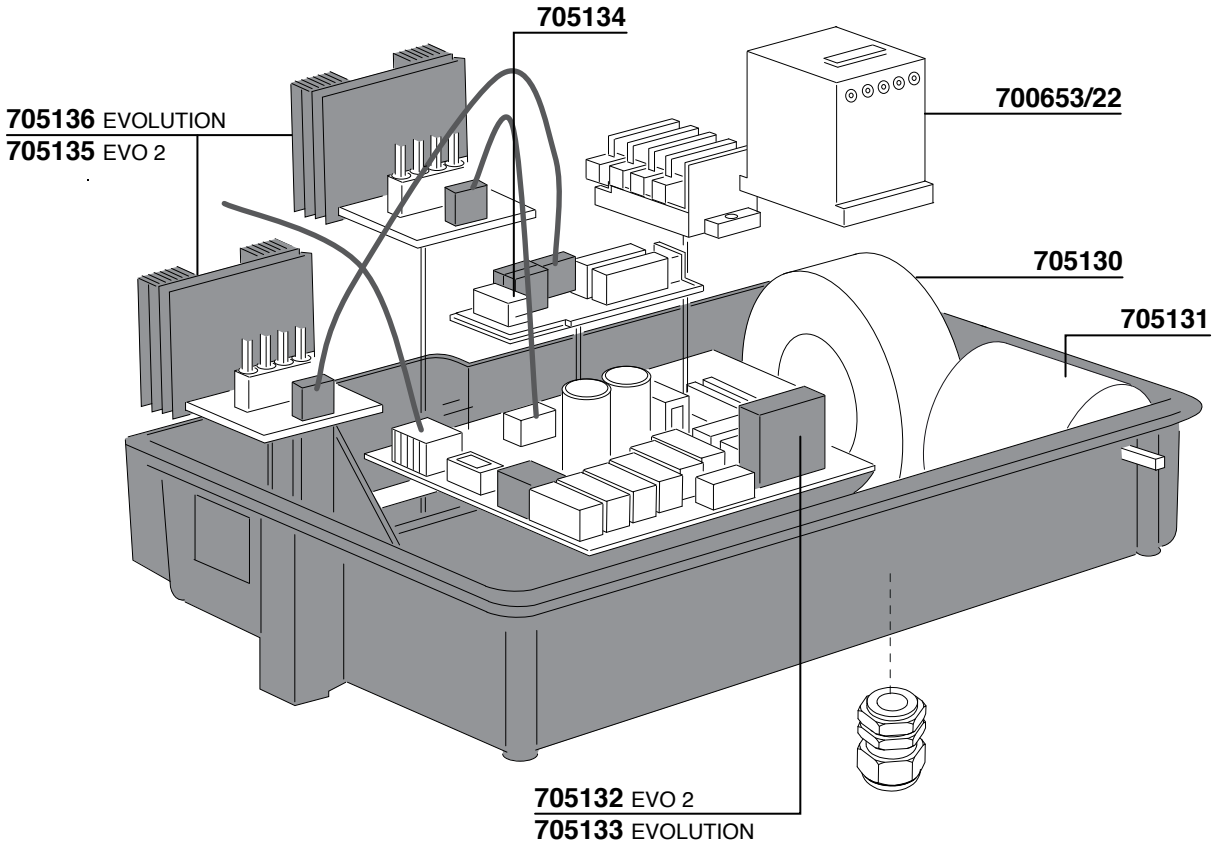
705134
700653/22
705136 EVOLUTION
705135 EVO 2
705130
705131
705132 EVO 2
705133 EVOLUTION

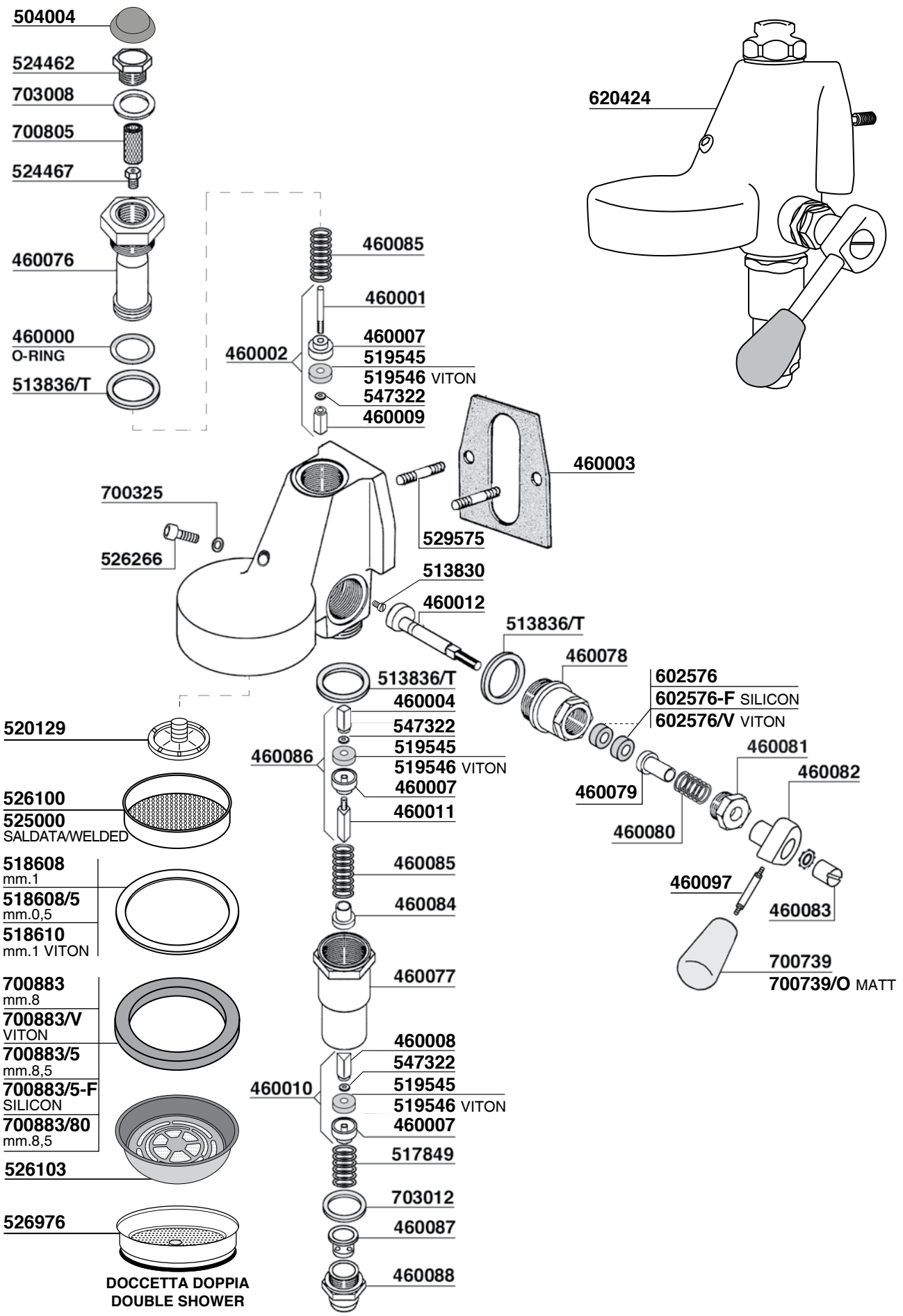
504004
524462
703008
700805
524467
460076
460000
O-RING
513836/T
460085
460001
460002
460007
519545
519546 VITON
547322
460009
620424
460003
700325
526266
529575
513830
460012
513836/T
460078
602576
602576-F SILICON
602576/V VITON
513836/T
460004
547322
519545
460086
519546 VITON
460007
460011
520129
526100
525000
SALDATA/WELDED
518608
mm.1
518608/5
mm.0,5
518610
mm.1 VITON
460085
460084
460081
460082
460079
460080
460097
460083
700739
700739/O MATT
460077
700883
mm.8
700883/V
VITON
700883/5
mm.8,5
700883/5-F
SILICON
700883/80
mm.8,5
460008
547322
519545
460010
519546 VITON
460007
517849
526103
703012
460087
526976
460088
DOCCETTA DOPPIA
DOUBLE SHOWER

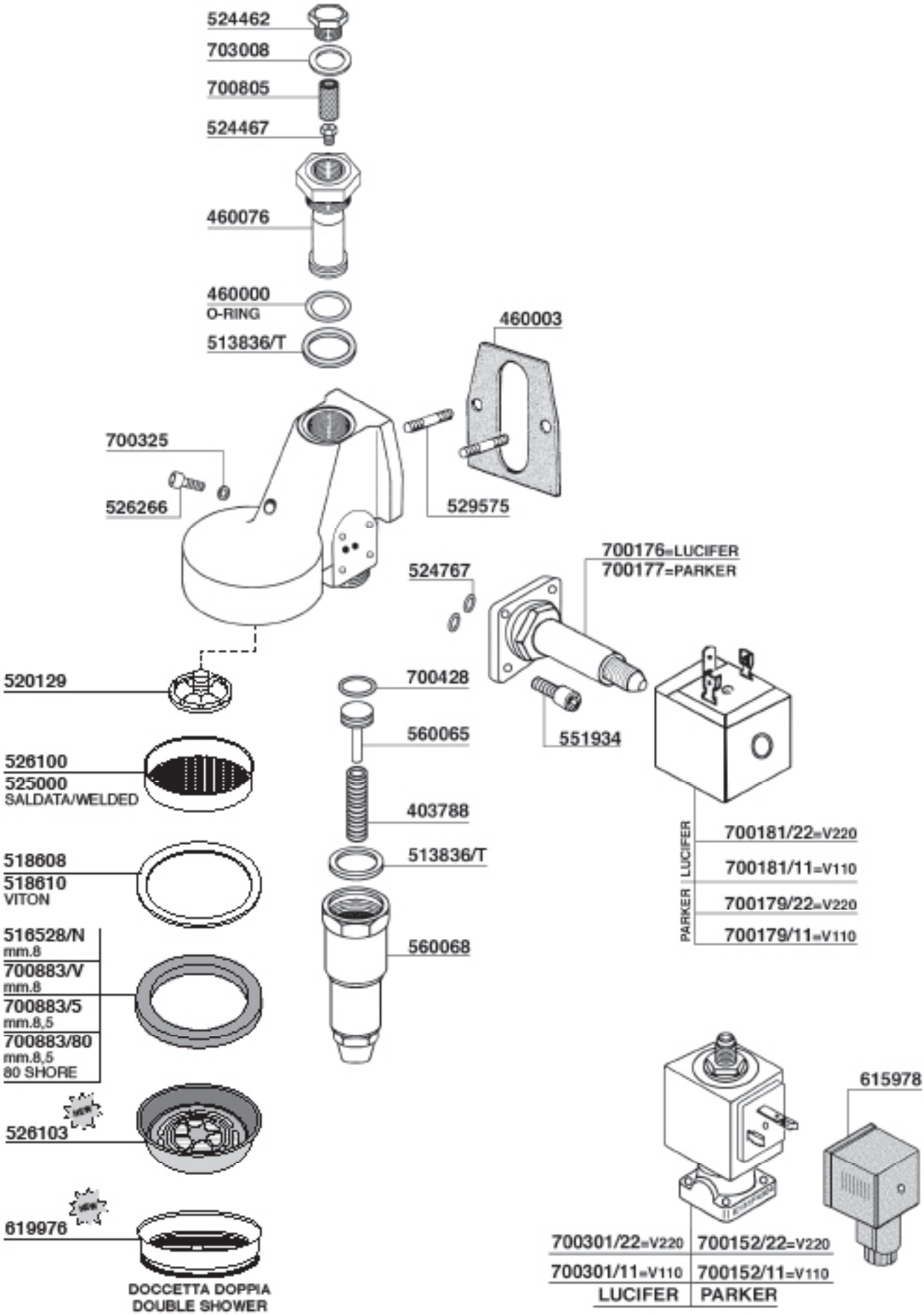
524462
703008
700805
524467
460076
460000
O-RING
513836/T
460003
700325
526266
529575
700176=LUCIFER
700177=PARKER
524767
520129
700428
560065
551934
526100
525000
SALDATA/WELDED
403788
513836/T
518608
518610
VITON
LUCIFER
700181/22=V220
700181/11=V110
PARKER
700179/22=V220
700179/11=V110
516528/N
mm.8
700883/V
mm.8
700883/5
mm.8,5
700883/80
mm.8,5
80 SHORE
560068
526103
619976
DOCCETTA DOPPIA
DOUBLE SHOWER
615978
700301/22=V220
700301/11=V110
LUCIFER
700152/22=V220
700152/11=V110
PARKER

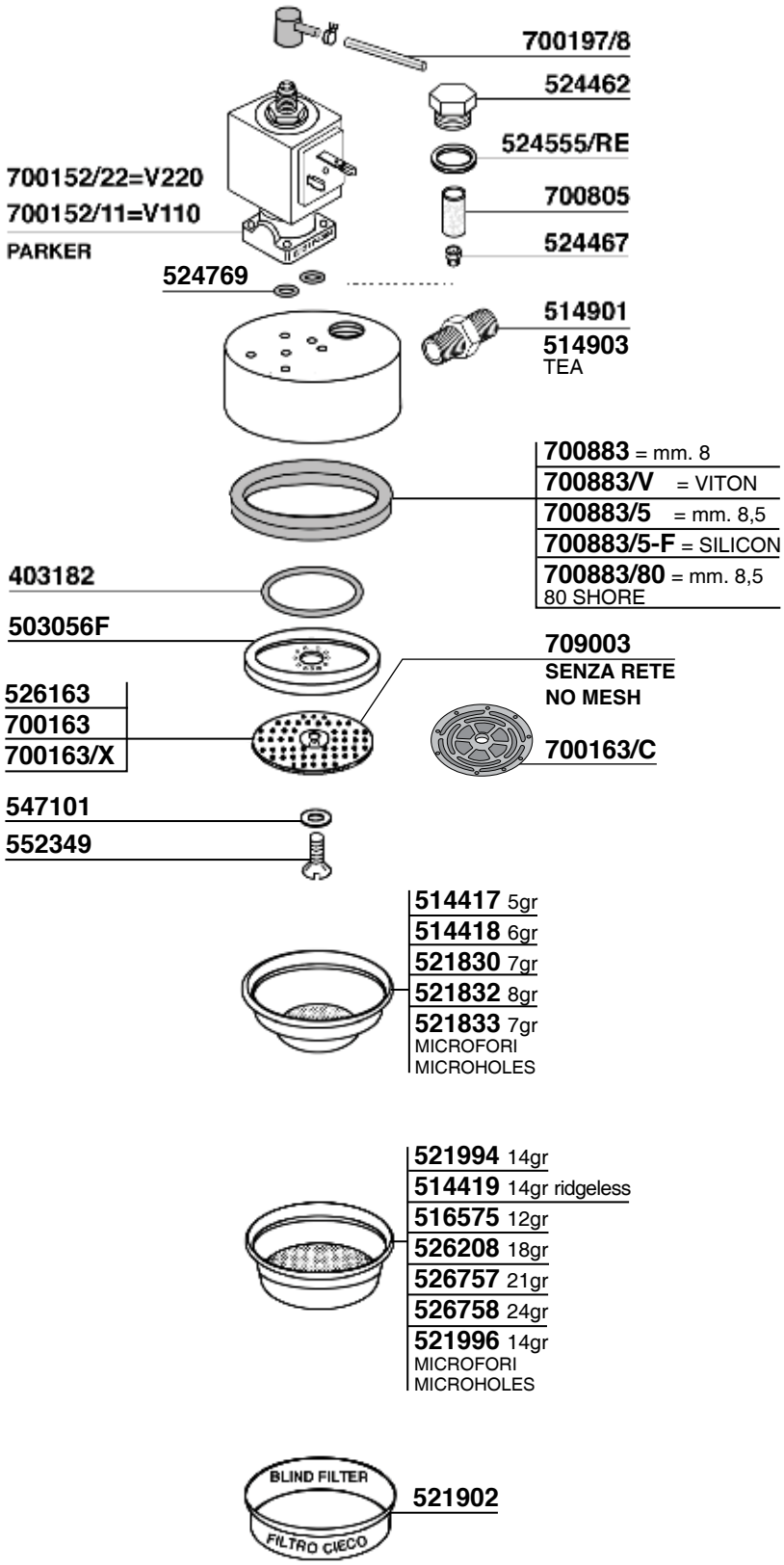
700197/8
524462
524555/RE
700805
524467
700152/22=V220
700152/11=V110
PARKER
524769
514901
514903
TEA
700883 = mm. 8
700883/V = VITON
700883/5 = mm. 8,5
700883/5-F = SILICON
700883/80 = mm. 8,5
80 SHORE
403182
503056F
709003
SENZA RETE
NO MESH
526163
700163
700163/X
700163/C
547101
552349
514417 5gr
514418 6gr
521830 7gr
521832 8gr
521833 7gr
MICROFORI
MICROHOLES
521994 14gr
514419 14gr ridgeless
516575 12gr
526208 18gr
526757 21gr
526758 24gr
521996 14gr
MICROFORI
MICROHOLES
BLIND FILTER
FILTRO CIECO
521902

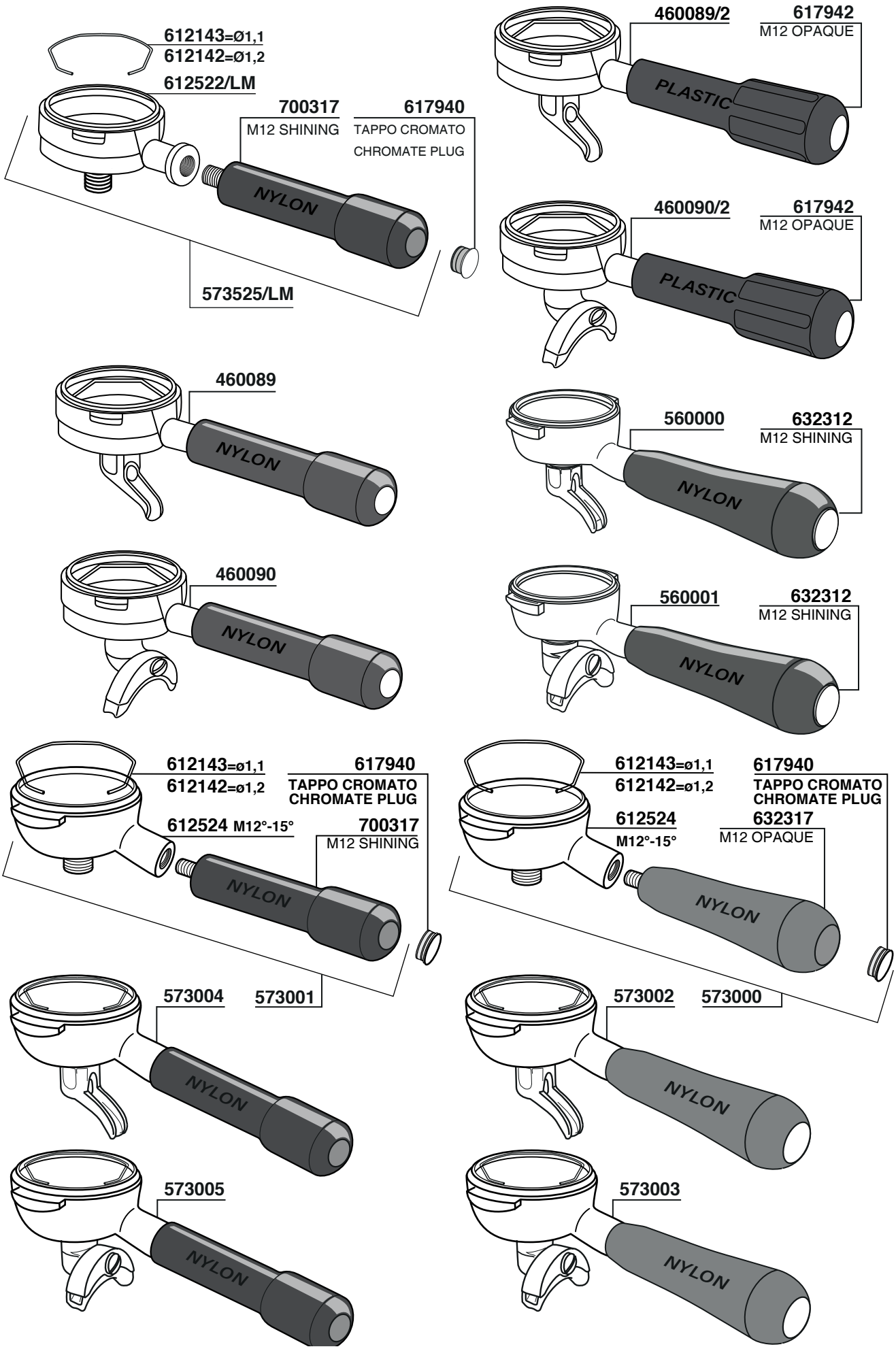
612143=Ø1,1
612142=Ø1,2
612522/LM
700317
M12 SHINING
617940
TAPPO CROMATO
CHROMATE PLUG
NYLON
573525/LM
460089/2
617942
M12 OPAQUE
PLASTIC
460090/2
617942
M12 OPAQUE
PLASTIC
460089
NYLON
560000
632312
M12 SHINING
NYLON
460090
NYLON
560001
632312
M12 SHINING
NYLON
612143=ø1,1
612142=ø1,2
617940
TAPPO CROMATO
CHROMATE PLUG
612524 M12°-15°
700317
M12 SHINING
NYLON
612143=ø1,1
612142=ø1,2
617940
TAPPO CROMATO
CHROMATE PLUG
612524
M12°-15°
632317
M12 OPAQUE
NYLON
573004
573001
NYLON
573002
573000
NYLON
573005
NYLON
573003
NYLON

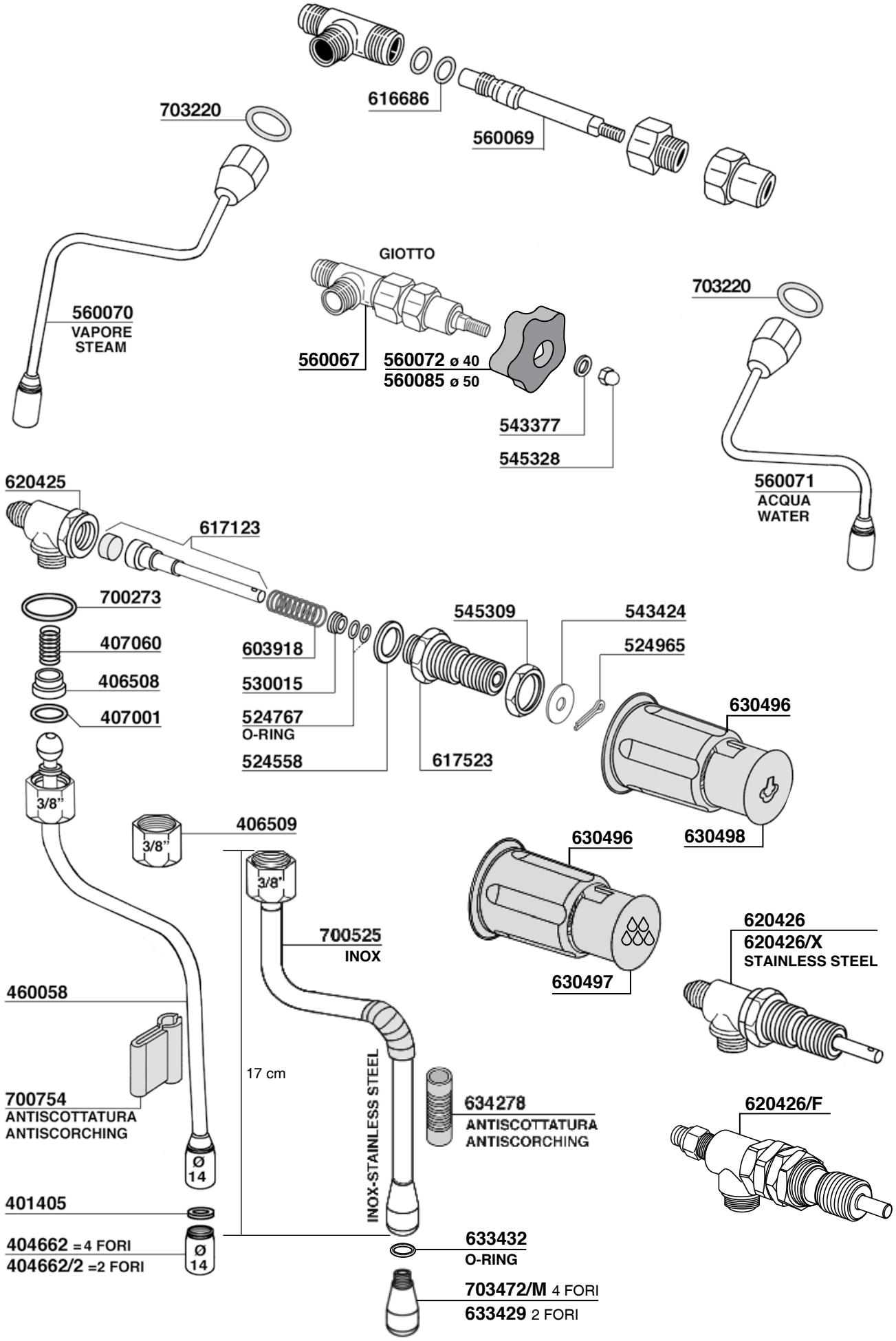
616686
560069
703220
560070
VAPORE
STEAM
GIOTTO
560067
560072 ø 40
560085 ø 50
543377
545328
703220
560071
ACQUA
WATER
620425
617123
700273
407060
406508
407001
603918
530015
524767
O-RING
524558
617523
545309
543424
524965
630496
630498
3/8"
406509
3/8"
3/8"
700525
INOX
630496
630497
620426
620426/X
STAINLESS STEEL
460058
17 cm
INOX-STAINLESS STEEL
700754
ANTISCOTTATURA
ANTISCORCHING
634278
ANTISCOTTATURA
ANTISCORCHING
620426/F
Ø
14
401405
404662 =4 FORI
404662/2 =2 FORI
Ø
14
633432
O-RING
703472/M 4 FORI
633429 2 FORI

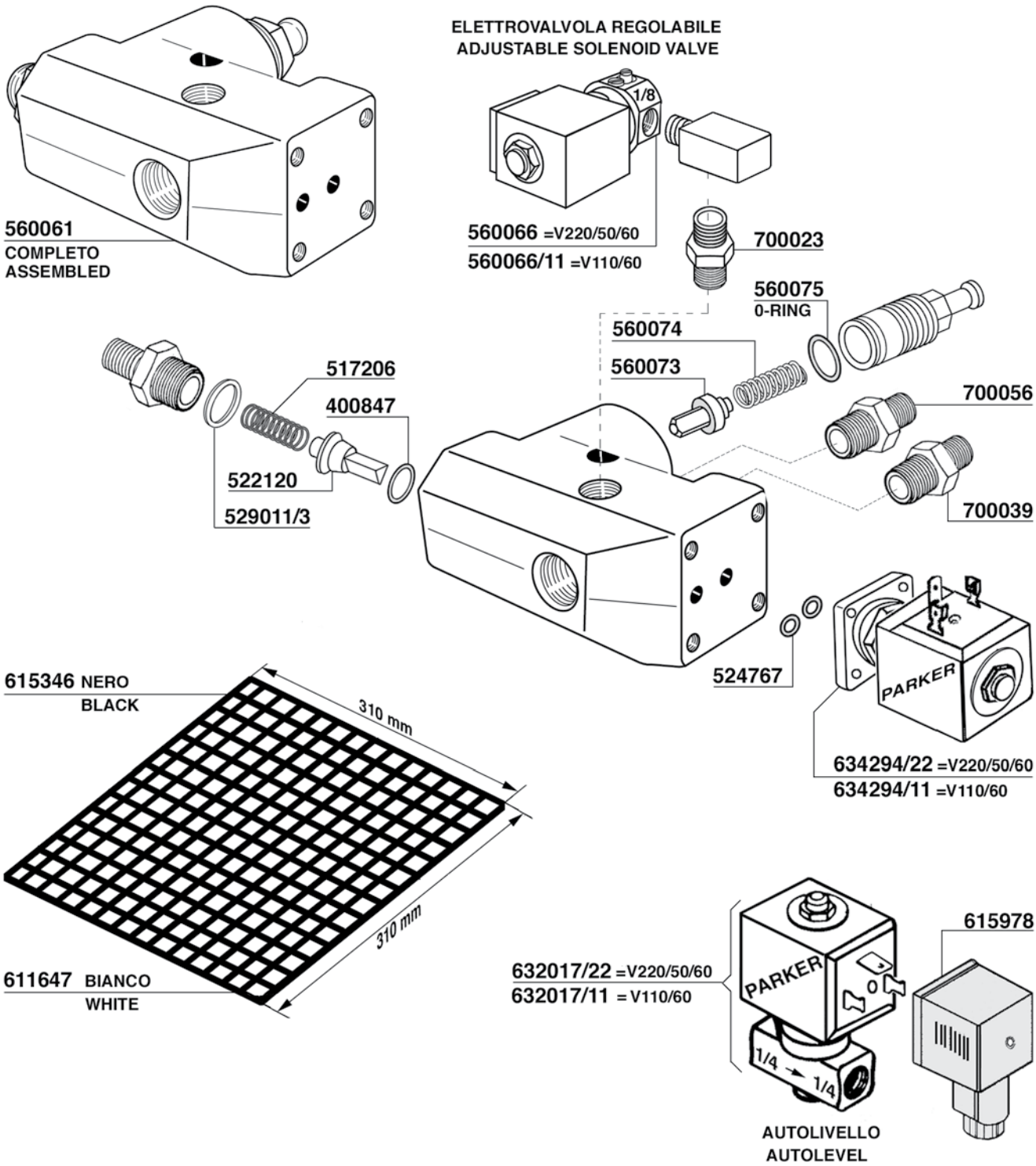

TUBO SCARICO - DRAIN HOSES
PLASTICA NERO - BLACK PLASTIC

560060 = Ø20x24

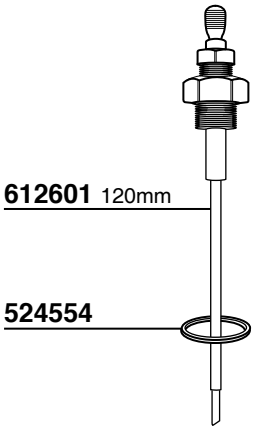

TUBI INOX - STAINLESS STEEL HOSES
BAR 12 - t.90°

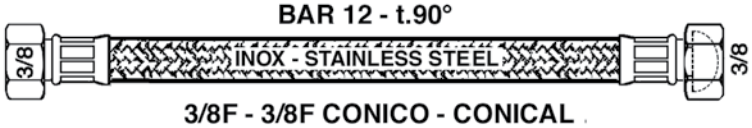

3/8F - 3/8F CONICO - CONICAL

700182= cm.50

700184/S= cm.150

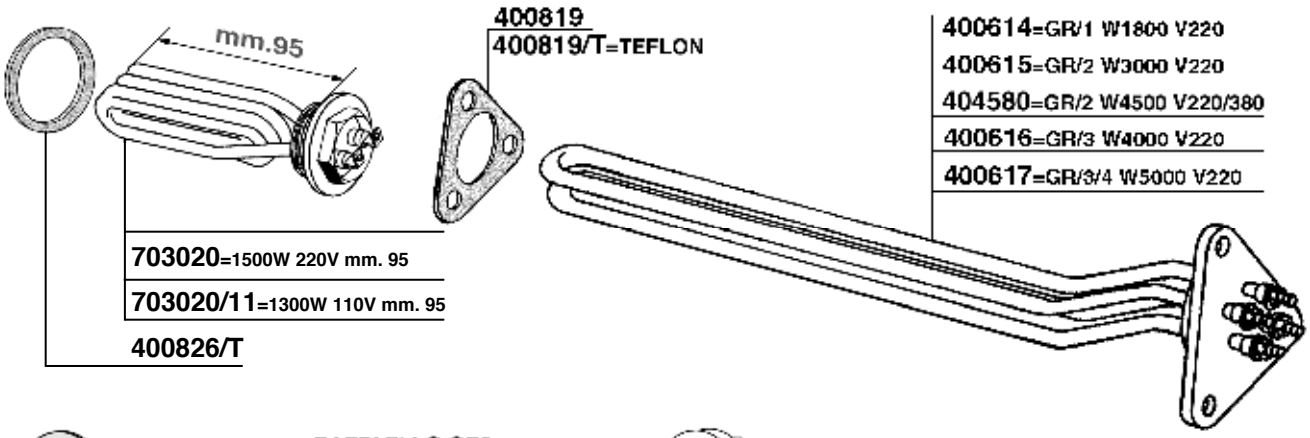
mm.95
400819
400819/T=TEFLON
400614=GR/1 W1800 V220
400615=GR/2 W3000 V220
404580=GR/2 W4500 V220/380
400616=GR/3 W4000 V220
400617=GR/3/4 W5000 V220
703020=1500W 220V mm. 95
703020/11=1300W 110V mm. 95
400826/T

RAFFAELLO GR2
400826/T=TEFLON
703532=GR2 W3000 V220

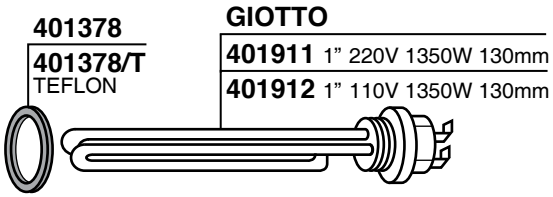
401378
401378/T
TEFLON
GIOTTO
401911 1" 220V 1350W 130mm
401912 1" 110V 1350W 130mm

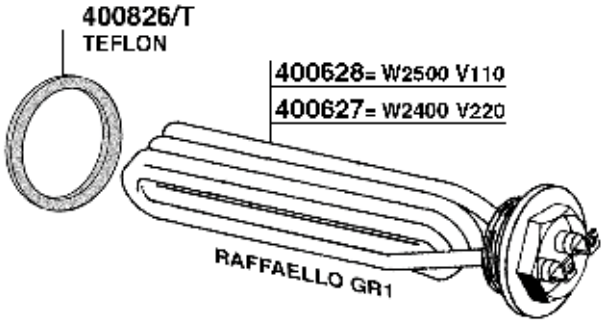
400826/T
TEFLON
400628= W2500 V110
400627= W2400 V220
RAFFAELLO GR1

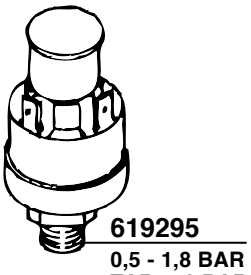
619295
0,5 - 1,8 BAR
TAR. 1,2 BAR

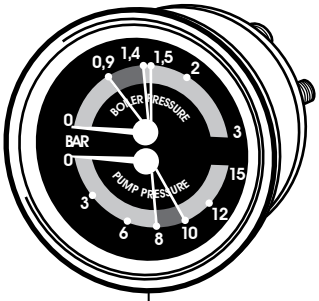
BOILER PRESSURE
PUMP PRESSURE
BAR
560076

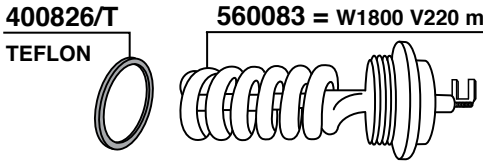
400826/T
TEFLON
560083 = W1800 V220 mm.105

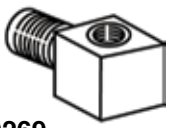

615624/A
certificato
certified
700217
3/8
3/8
524555

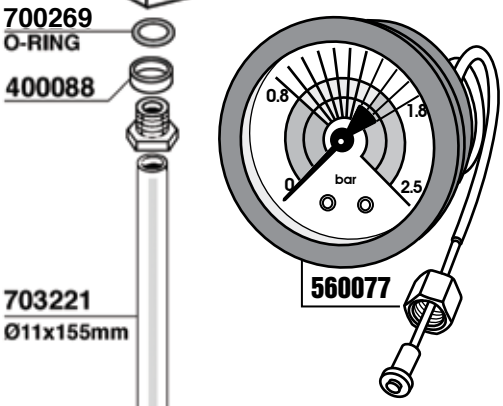
700269
O-RING
400088
703221
Ø11x155mm
400813
0.8
1.8
2.5
bar
560077
0.8
1.8
15
bar
560078

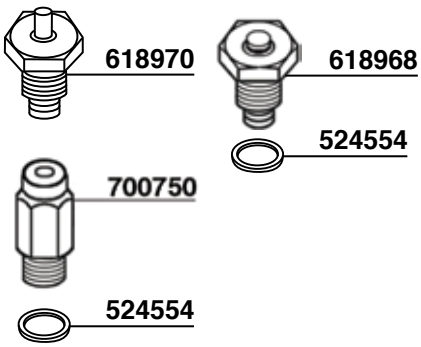
618970
618968
524554
700750
524554

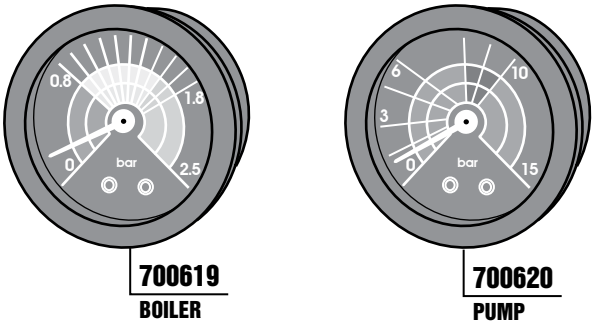
0.8
1.8
2.5
bar
700619
BOILER
6
10
3
15
bar
700620
PUMP

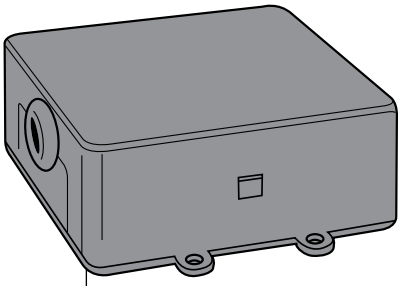

560063
CENTRALINA GR2/3 V230/50/60
GICAR CODE 9.5.2202G 07

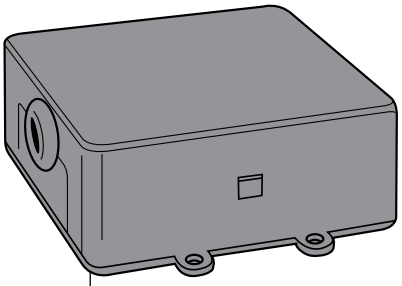

560079
CENTRALINA GR2/3 V230/50/60
GICAR CODE 9.5.25.20G 00

560084
VIVALDI / RAFFAELLO
GICAR CODE 9.9.08.82G

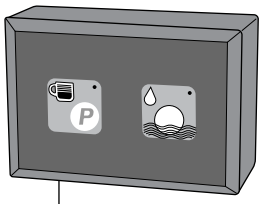

560086
RAFFAELLO
GICAR CODE 9.9.09.01G

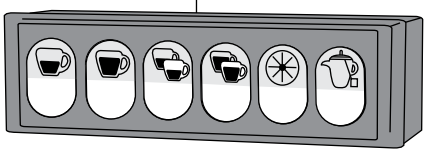

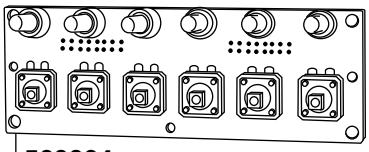

560064
PULSANTIERA VENEZIANO GR2/3
GICAR CODE 9.9.11.99G

620705
GICAR CODE 9.9.09.28

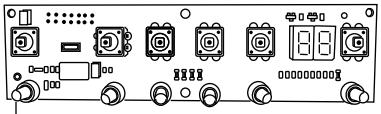

620735
GICAR CODE 9.9.08.01G

8 PIN DOPPI
8 DOUBLE PINS

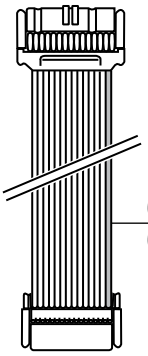

620705/A 16 PIN
RAFFAELLO / MICHELANGELO
GICAR CODE 9.9.09.25G

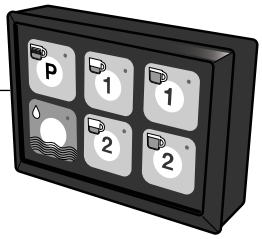

620707 800 mm
620716 1000 mm

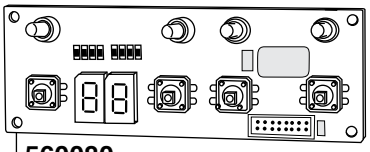

560080
PULSANTIERA P4
CROMO MICHELANGELO
GICAR CODE 9.9.09.48G

620748
GICAR CODE 8.9.48.76

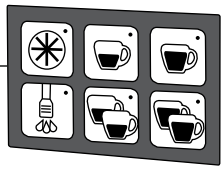

551937
530148
617903/G
615978/T
615979
620405

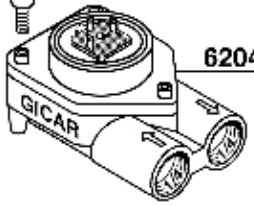

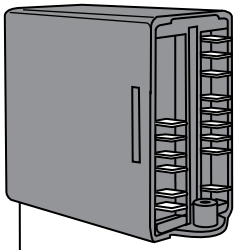

560087 230V
CELLINI
GICAR CODE 9.9.04.76G

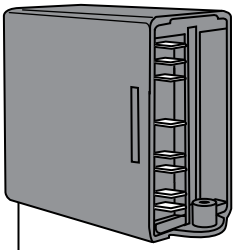

CENTRALINA AUTOLIVELLO
AUTOFILL ELECTRONIC BOX
560062/11 110V
GICAR CODE 9.9.04.77G

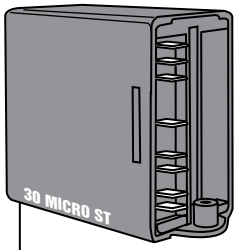

560081 110V
GICAR CODE 9.1.04.57G
560082 230/240V - 50/60 Hz
GICAR CODE 9.1.40.56G

617730=V220
617730/11=V110

617732=V220
617732/11=V110

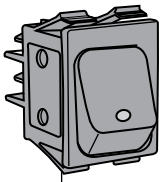

579671
NERO/BLACK

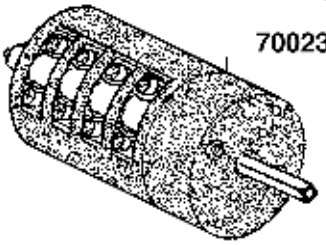

700238

613656

ELEKTRA

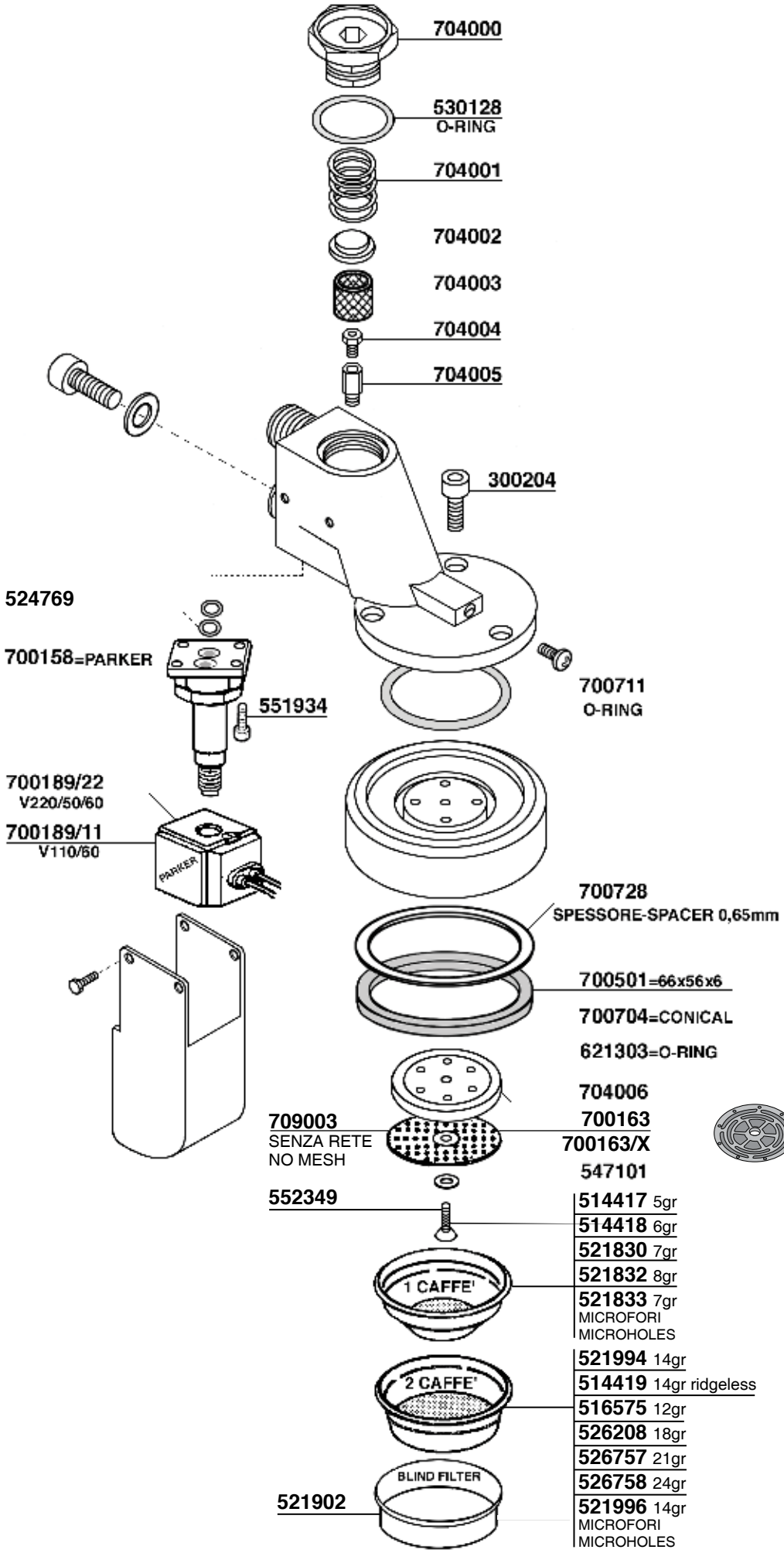
704000
530128
O-RING
704001
704002
704003
704004
704005
300204
524769
700158=PARKER
551934
700711
O-RING
700189/22
V220/50/60
700189/11
V110/60
PARKER
700728
SPESSORE-SPACER 0,65mm
700501=66x56x6
700704=CONICAL
621303=O-RING
704006
709003
SENZA RETE
NO MESH
700163
700163/X
700163/C
547101
552349
514417 5gr
514418 6gr
521830 7gr
521832 8gr
1 CAFFE'
521833 7gr
MICROFORI
MICROHOLES
521994 14gr
514419 14gr ridgeless
2 CAFFE'
516575 12gr
526208 18gr
526757 21gr
526758 24gr
BLIND FILTER
521902
521996 14gr
MICROFORI
MICROHOLES

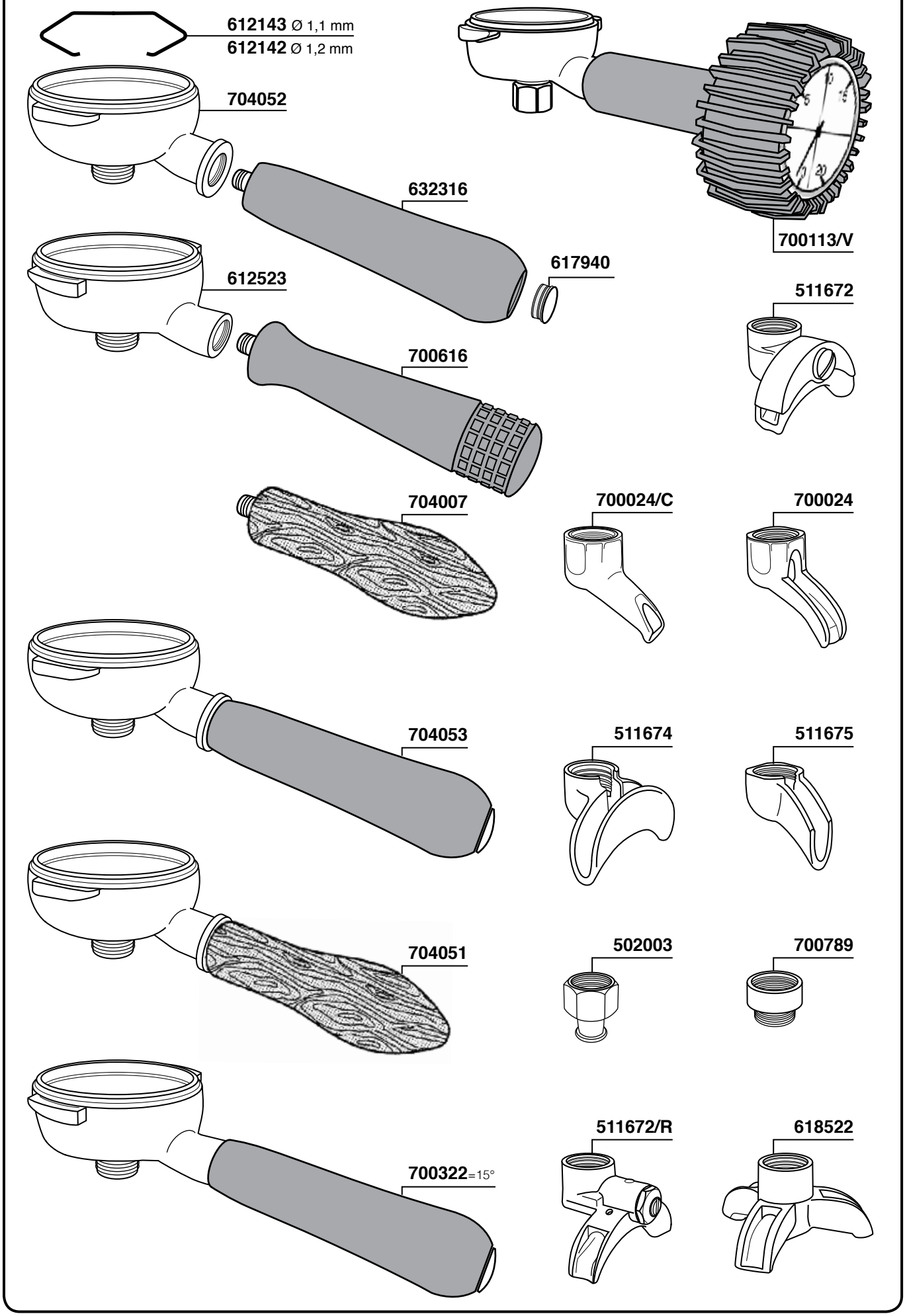
612143 Ø 1,1 mm
612142 Ø 1,2 mm
704052
632316
617940
700113/V
612523
511672
700616
704007
700024/C
700024
704053
511674
511675
704051
502003
700789
700322=15°
511672/R
618522

ELEKTRA

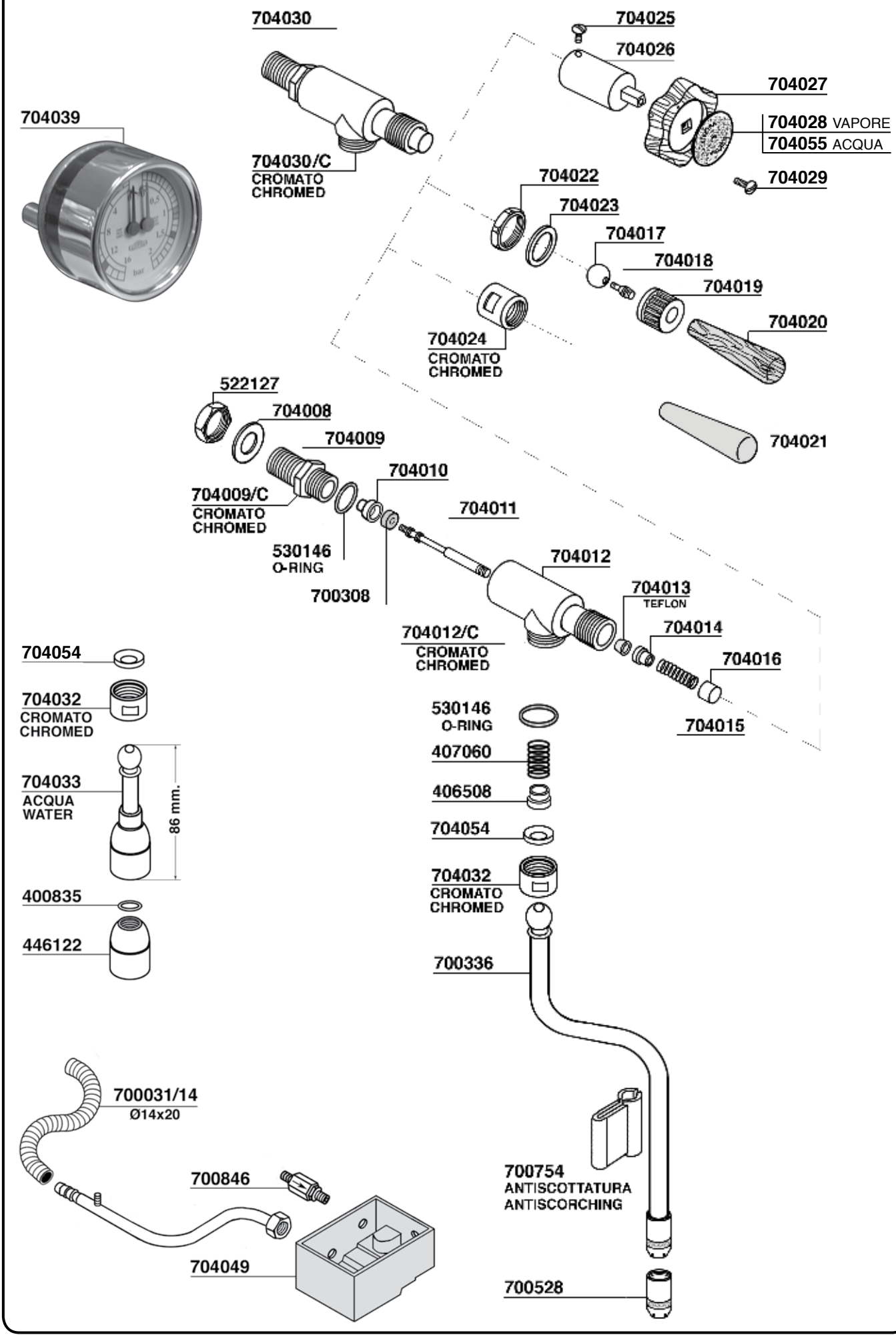
704030
704030/C
CROMATO
CHROMED
704039
704025
704026
704027
704028 VAPORE
704055 ACQUA
704029
704022
704023
704017
704018
704019
704020
704024
CROMATO
CHROMED
704021
522127
704008
704009
704009/C
CROMATO
CHROMED
704010
704011
530146
O-RING
700308
704012
704013
TEFLON
704014
704016
704015
704012/C
CROMATO
CHROMED
704054
704032
CROMATO
CHROMED
704033
ACQUA
WATER
86 mm.
400835
446122
530146
O-RING
407060
406508
704054
704032
CROMATO
CHROMED
700336
700031/14
Ø14x20
700846
704049
700754
ANTISCOTTATURA
ANTISCORCHING
700528

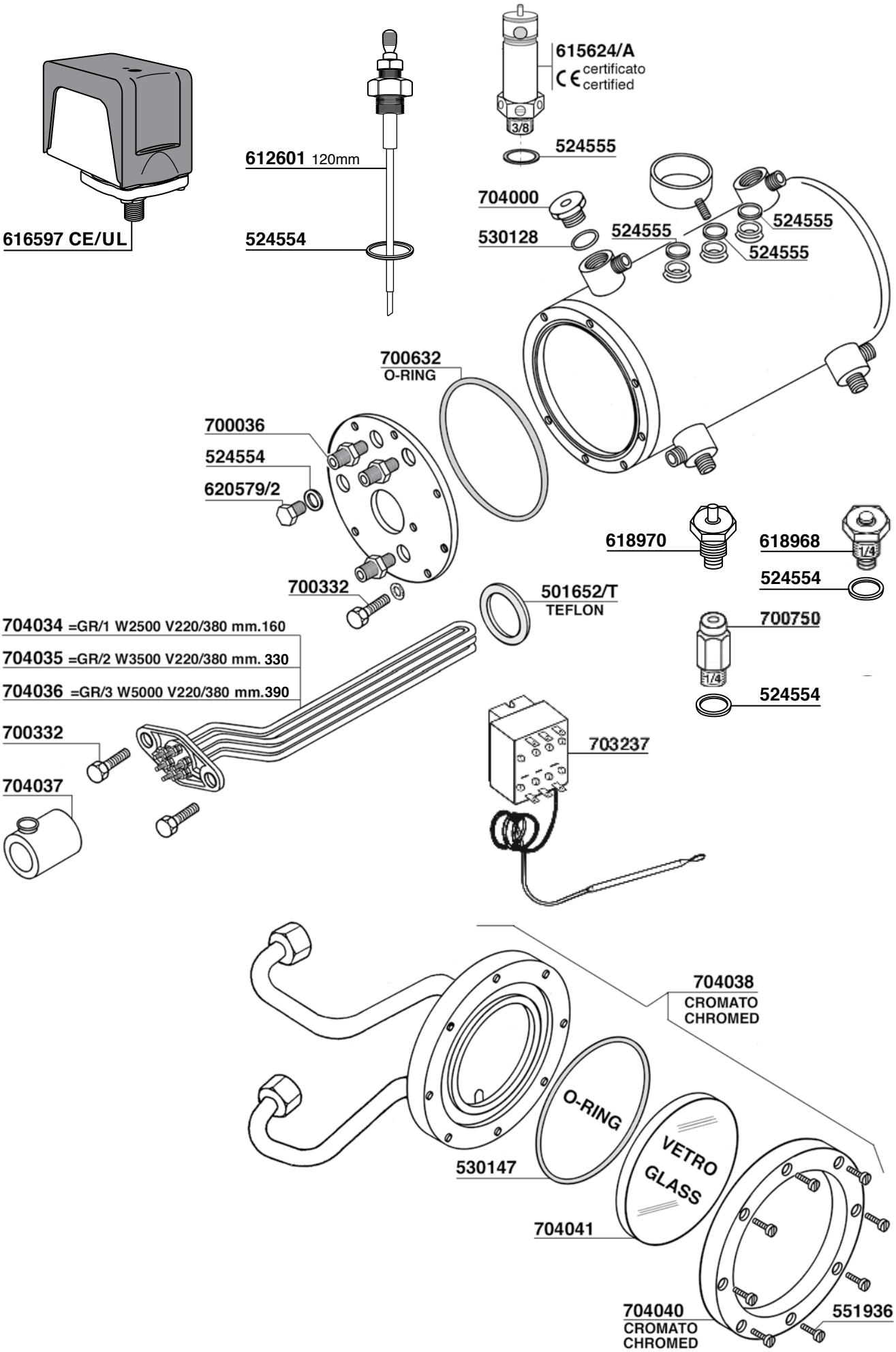
616597 CE/UL
612601 120mm
524554
615624/A
certificato
certified
3/8
524555
704000
530128
524555
524555
524555
700632
O-RING
700036
524554
620579/2
618970
618968
1/4
524554
700332
501652/T
TEFLON
704034 =GR/1 W2500 V220/380 mm.160
704035 =GR/2 W3500 V220/380 mm. 330
704036 =GR/3 W5000 V220/380 mm.390
700750
1/4
524554
700332
703237
704037
704038
CROMATO
CHROMED
O-RING
VETRO
GLASS
530147
704041
704040
CROMATO
CHROMED
551936

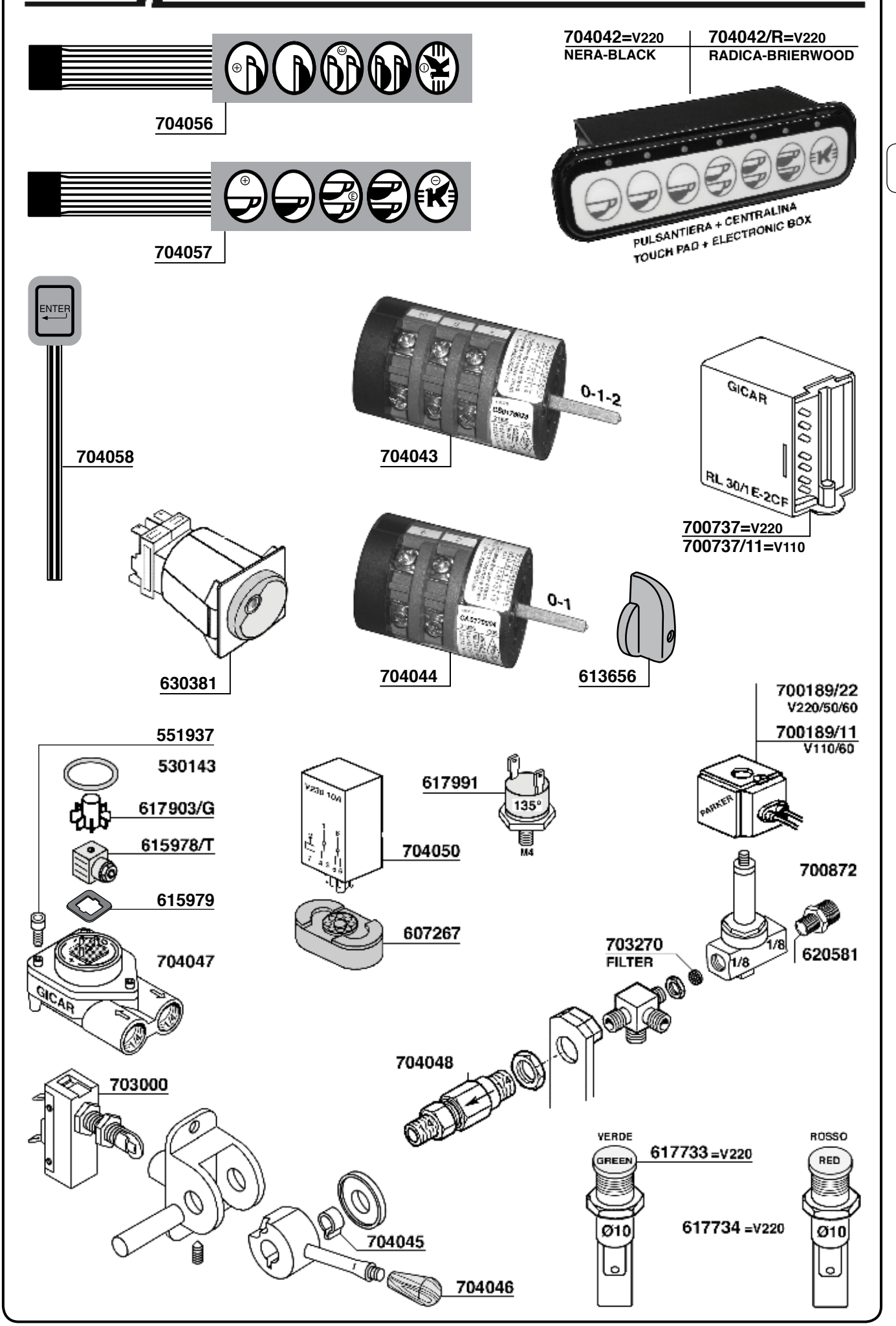
704056
704057
704042=V220
NERA-BLACK
704042/R=V220
RADICA-BRIERWOOD
PULSANTIERA + CENTRALINA
TOUCH PAD + ELECTRONIC BOX
ENTER
704058
0-1-2
704043
GICAR
RL 30/1 E-2CF
700737=V220
700737/11=V110
630381
0-1
704044
613656
700189/22
V220/50/60
700189/11
V110/60
PARKER
551937
530143
617903/G
615978/T
615979
704047
GICAR
V230 10A
704050
617991
135°
M4
607267
700872
1/8
1/8
620581
703270
FILTER
704048
703000
704045
704046
VERDE
GREEN
617733 =V220
Ø10
617734 =V220
ROSSO
RED
Ø10

EXPOBAR

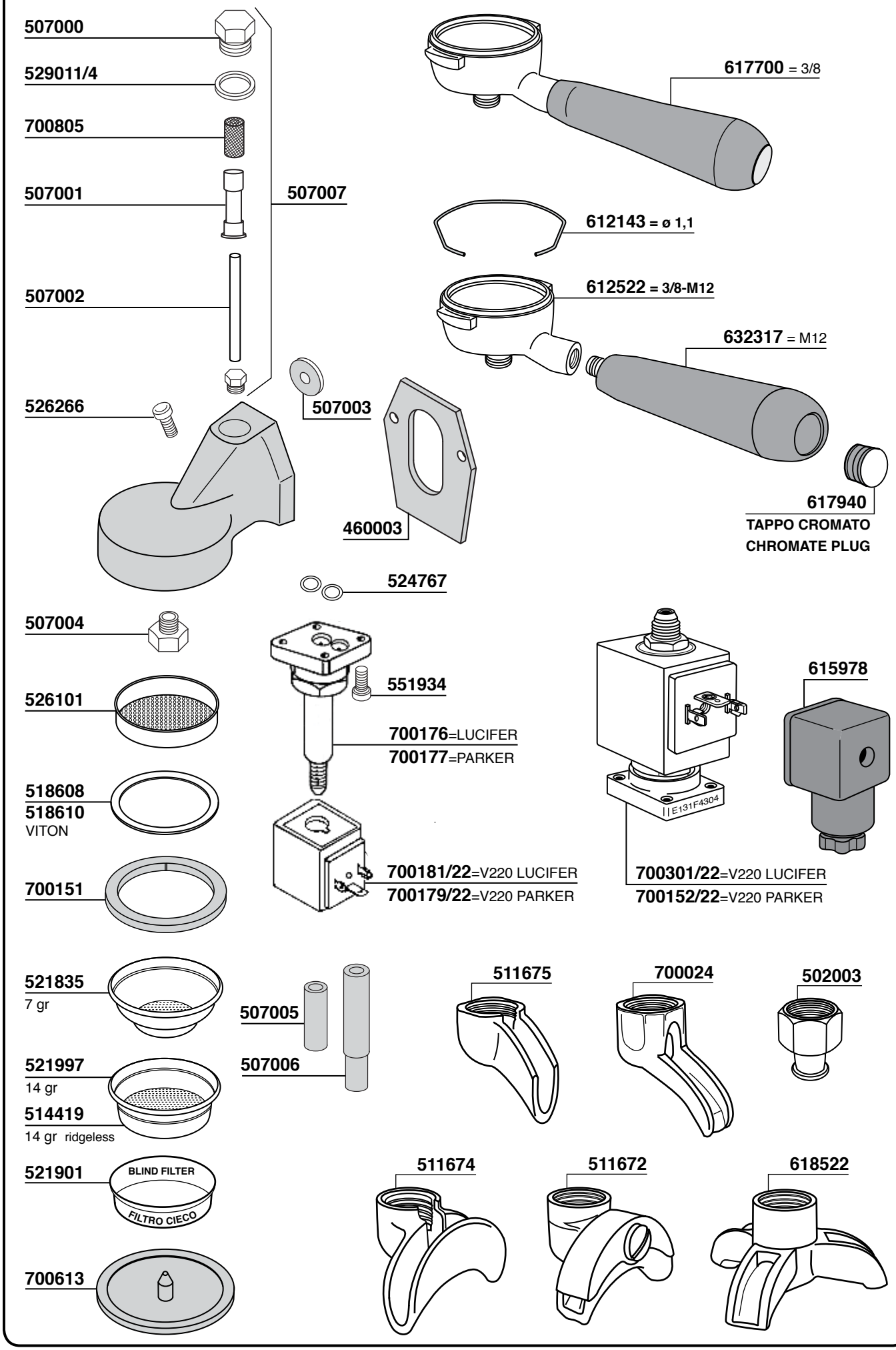
507000
529011/4
700805
507001
507007
507002
526266
507003
460003
617700 = 3/8
612143 = ø 1,1
612522 = 3/8-M12
632317 = M12
617940
TAPPO CROMATO
CHROMATE PLUG
524767
507004
526101
518608
518610
VITON
700151
551934
700176=LUCIFER
700177=PARKER
700181/22=V220 LUCIFER
700179/22=V220 PARKER
E131F4304
615978
700301/22=V220 LUCIFER
700152/22=V220 PARKER
521835
7 gr
521997
14 gr
514419
14 gr ridgeless
507005
507006
511675
700024
502003
521901
BLIND FILTER
FILTRO CIECO
700613
511674
511672
618522

EXPOBAR

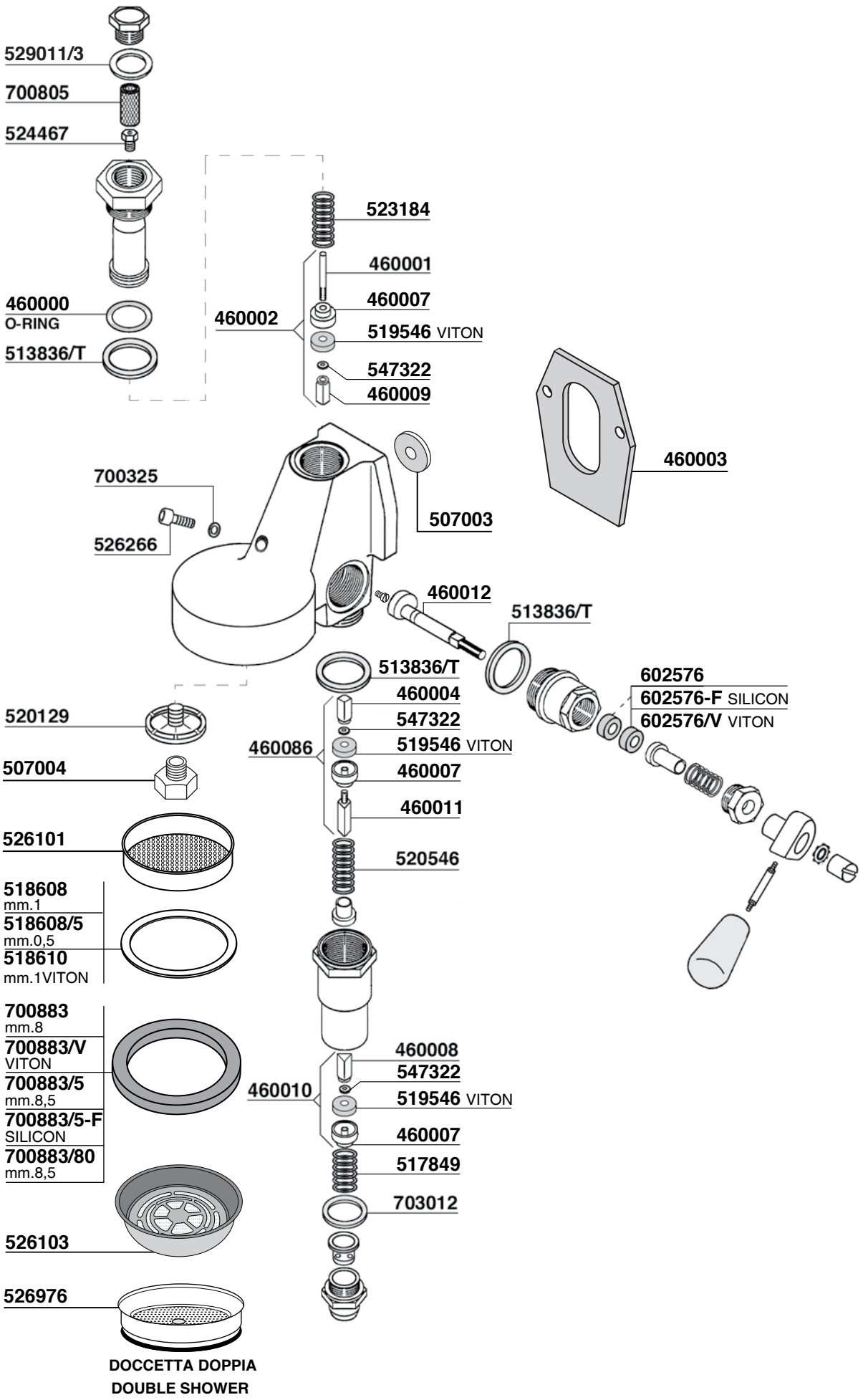
529011/3
700805
524467
523184
460001
460007
460000
O-RING
460002
519546 VITON
513836/T
547322
460009
460003
700325
507003
526266
460012
513836/T
513836/T
602576
460004
602576-F SILICON
520129
547322
602576/V VITON
460086
519546 VITON
507004
460007
460011
526101
520546
518608
mm.1
518608/5
mm.0,5
518610
mm.1VITON
700883
mm.8
700883/V
VITON
700883/5
mm.8,5
700883/5-F
SILICON
700883/80
mm.8,5
460008
547322
460010
519546 VITON
460007
517849
703012
526103
526976
DOCCETTA DOPPIA
DOUBLE SHOWER

EXPOBAR

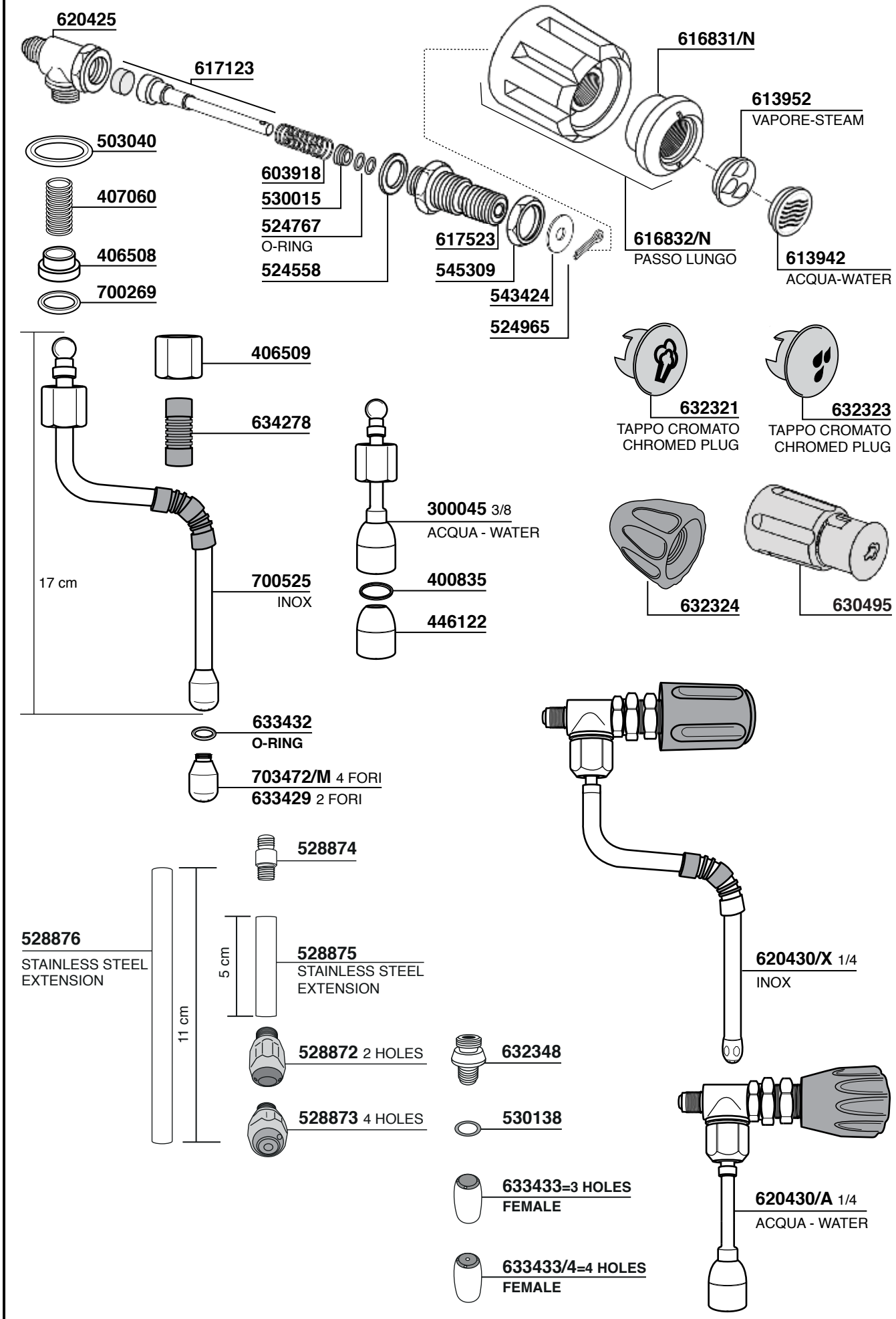
620425
617123
503040
407060
406508
700269
603918
530015
524767
O-RING
524558
617523
545309
543424
524965
616831/N
613952
VAPORE-STEAM
616832/N
PASSO LUNGO
613942
ACQUA-WATER
406509
634278
632321
TAPPO CROMATO
CHROMED PLUG
632323
TAPPO CROMATO
CHROMED PLUG
300045 3/8
ACQUA - WATER
17 cm
700525
INOX
400835
446122
632324
630495
633432
O-RING
703472/M 4 FORI
633429 2 FORI
528874
528876
STAINLESS STEEL
EXTENSION
5 cm
528875
STAINLESS STEEL
EXTENSION
11 cm
620430/X 1/4
INOX
528872 2 HOLES
632348
528873 4 HOLES
530138
633433=3 HOLES
FEMALE
633433/4=4 HOLES
FEMALE
620430/A 1/4
ACQUA - WATER

EXPOBAR

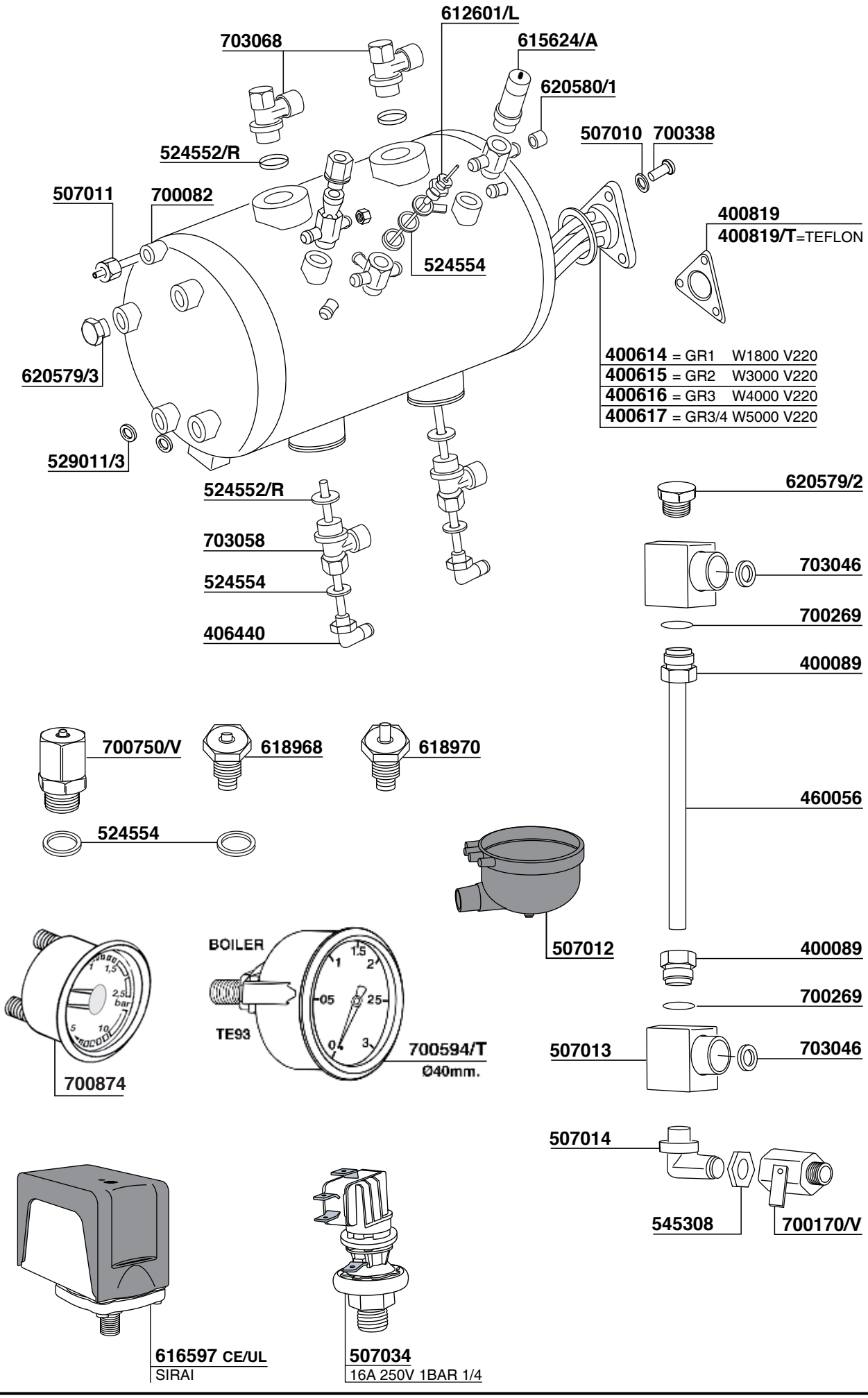
612601/L
703068
615624/A
620580/1
507010
700338
524552/R
507011
700082
400819
400819/T=TEFLON
524554
620579/3
400614 = GR1 W1800 V220
400615 = GR2 W3000 V220
400616 = GR3 W4000 V220
400617 = GR3/4 W5000 V220
529011/3
524552/R
620579/2
703058
703046
524554
700269
406440
400089
700750/V
618968
618970
460056
524554
507012
400089
BOILER
700269
TE93
700594/T
Ø40mm.
507013
703046
700874
507014
545308
700170/V
616597 CE/UL
SIRAI
507034
16A 250V 1BAR 1/4

100

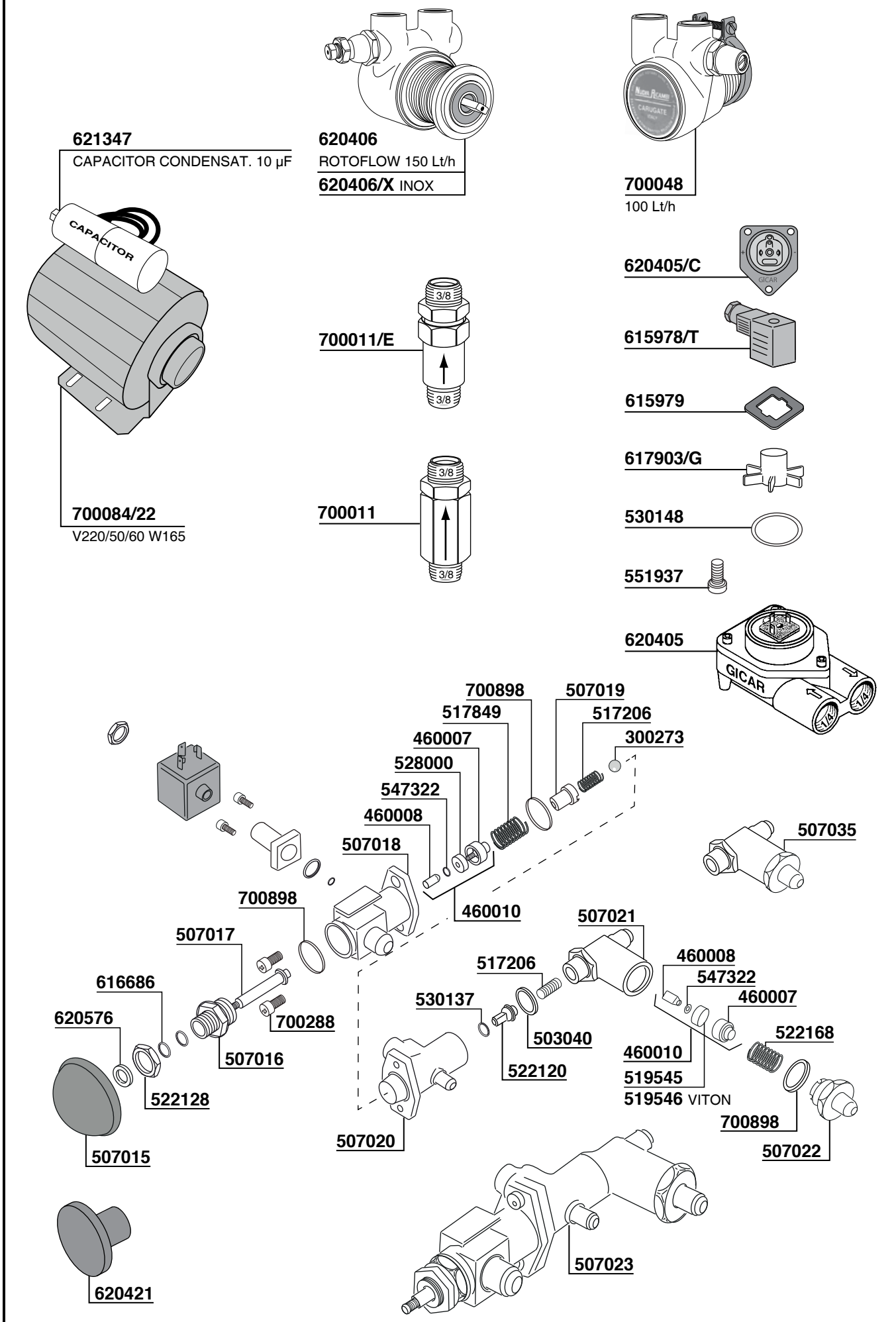
621347
CAPACITOR CONDENSAT. 10 µF
CAPACITOR
700084/22
V220/50/60 W165
620406
ROTOFLOW 150 Lt/h
620406/X INOX
700011/E
3/8
700011
700048
100 Lt/h
620405/C
GICAR
615978/T
615979
617903/G
530148
551937
620405
GICAR
700898
507019
517849
517206
460007
300273
528000
547322
460008
507018
507035
460010
700898
507021
507017
460008
517206
547322
616686
530137
460007
620576
700288
503040
522168
507016
460010
522120
519545
522128
519546 VITON
700898
507020
507022
507015
507023
620421

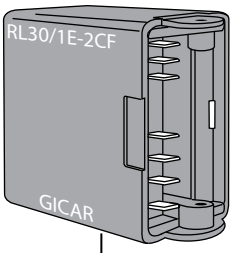

700737 220V
AUTOLIVELLO - AUTOFUEL
GICAR CODE 9.1.40.71G

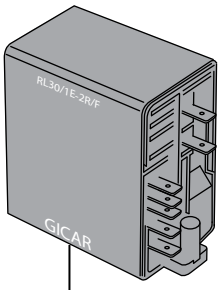

507031 240V
GICAR CODE 9.1.42.33G
507031/11 115V
GICAR CODE 9.1.42.36G

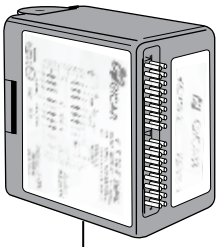

507028

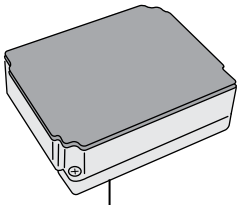

507029 230V
GICAR CODE 9.5.32.01G01

703296

700749
20A 0-1

507036 230V
GICAR CODE 9.5.25.50G01

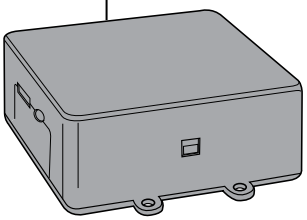

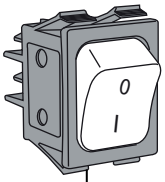

700429

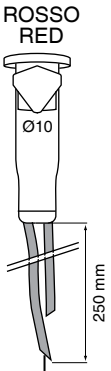

615511/22 220V

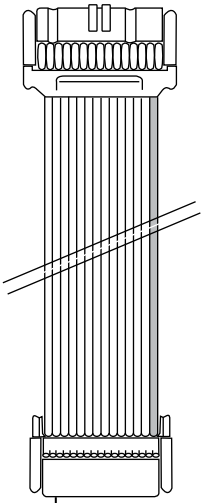

620706 600 mm - 16 PIN
620707 800 mm - 16 PIN

507008
GICAR CODE 8.9.46.46

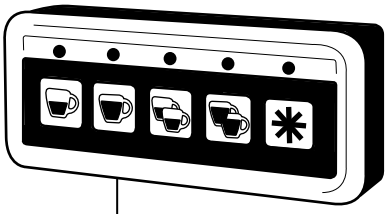

507024
GICAR CODE 9.9.09.51G

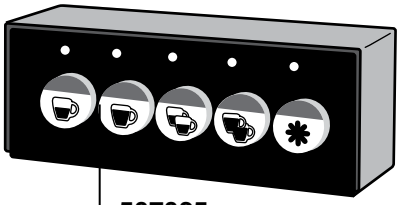

507025
GICAR CODE 9.9.07.28G

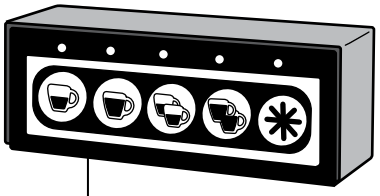

507026
GICAR CODE 9.5.27.60G

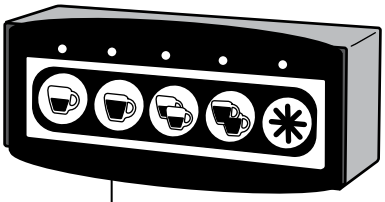

507027
GICAR CODE 9.5.28.30G 00

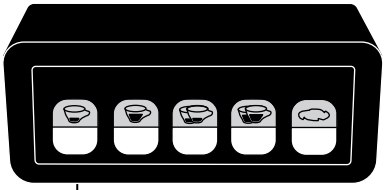

507032
GICAR CODE 9.5.28.61G 00

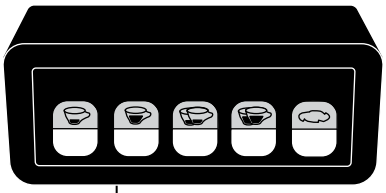

507033
GICAR CODE 9.5.28.59G 00

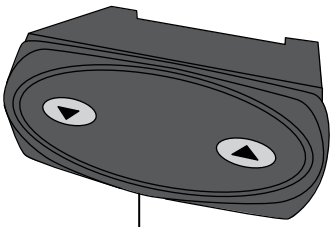

507030
GICAR CODE 9.3.00.43G

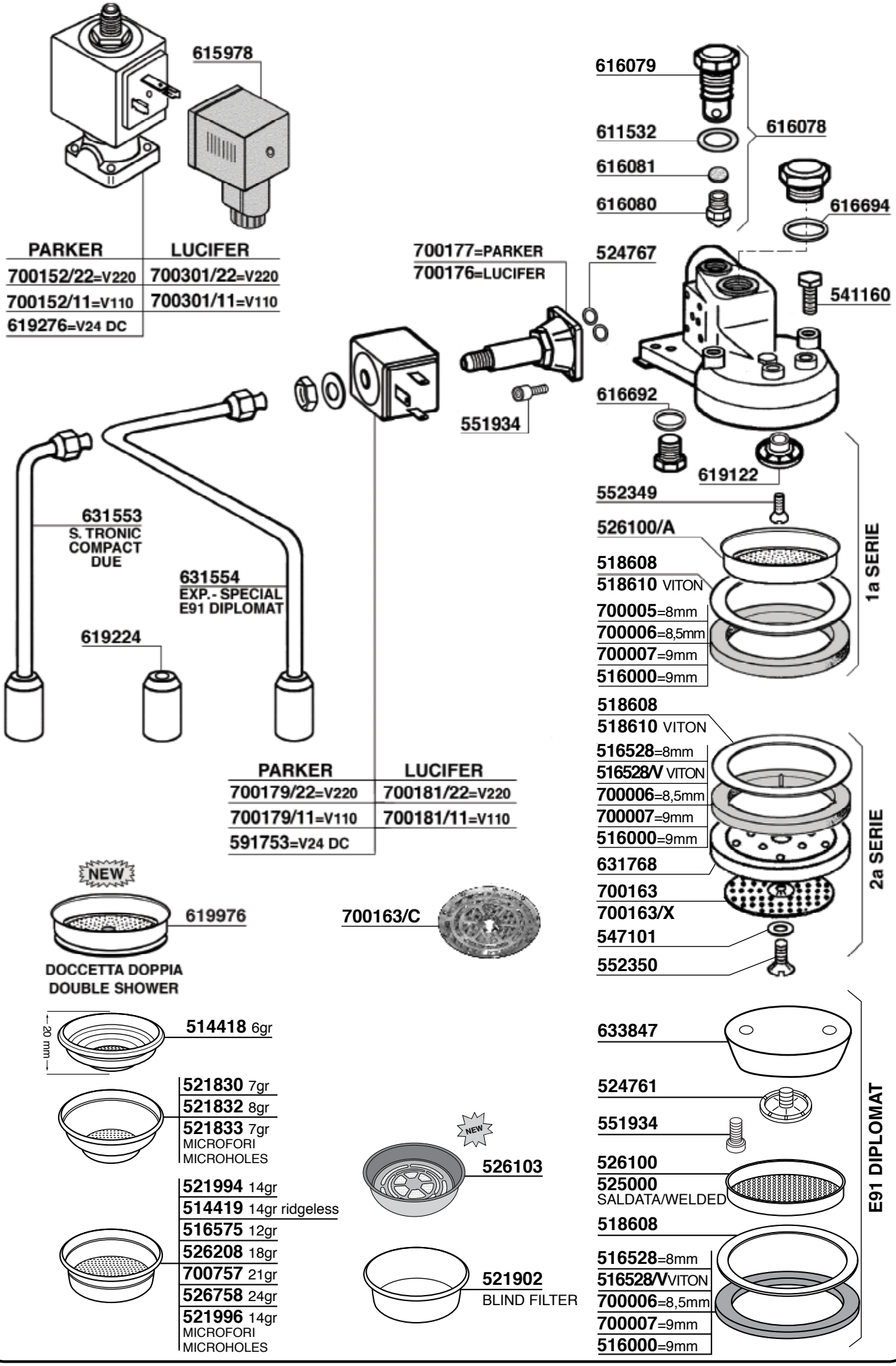
615978
PARKER
LUCIFER
700152/22=V220
700301/22=V220
700152/11=V110
700301/11=V110
619276=V24 DC
700177=PARKER
700176=LUCIFER
524767
551934
616079
611532
616078
616081
616080
616694
541160
616692
619122
552349
526100/A
518608
518610 VITON
700005=8mm
700006=8,5mm
700007=9mm
516000=9mm
1a SERIE
631553
S. TRONIC
COMPACT
DUE
631554
EXP.- SPECIAL
E91 DIPLOMAT
619224
PARKER
LUCIFER
700179/22=V220
700181/22=V220
700179/11=V110
700181/11=V110
591753=V24 DC
518608
518610 VITON
516528=8mm
516528/V VITON
700006=8,5mm
700007=9mm
516000=9mm
631768
700163
700163/X
547101
552350
2a SERIE
NEW
619976
DOCCETTA DOPPIA
DOUBLE SHOWER
700163/C
20 mm
514418 6gr
521830 7gr
521832 8gr
521833 7gr
MICROFORI
MICROHOLES
521994 14gr
514419 14gr ridgeless
516575 12gr
526208 18gr
700757 21gr
526758 24gr
521996 14gr
MICROFORI
MICROHOLES
NEW
526103
521902
BLIND FILTER
633847
524761
551934
526100
525000
SALDATA/WELDED
518608
516528=8mm
516528/V VITON
700006=8,5mm
700007=9mm
516000=9mm
E91 DIPLOMAT

E91 - E92 - ELITE - EMBLEMA - ENOVA - STYLEMA - TEOREMA

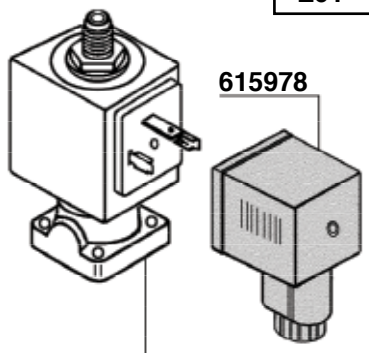

PARKER	LUCIFER
700152/22=V220	700301/22=V220
700152/11=V110	700301/11=V110

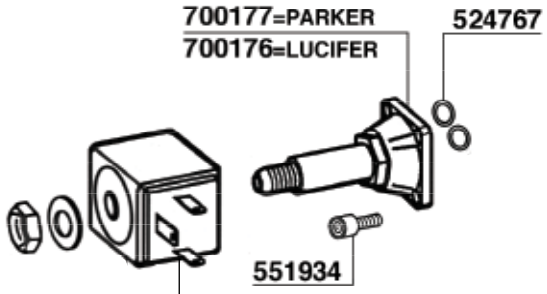

PARKER	LUCIFER
700179/22=V220	700181/22=V220
700179/11=V110	700181/11=V110

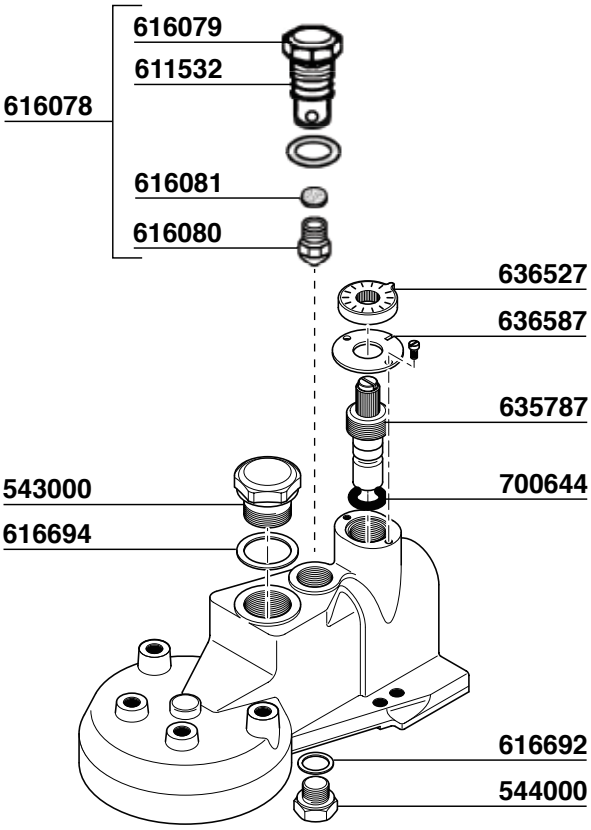

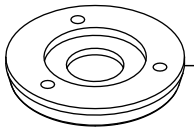

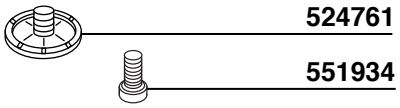

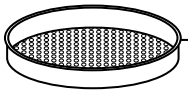

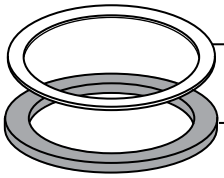

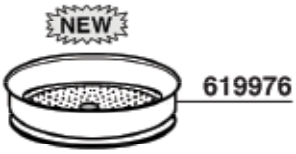

DOCCETTA DOPPIA
DOUBLE SHOWER

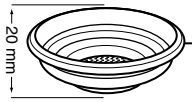

521830 7gr
521832 8gr
521833 7gr
MICROFORI
MICROHOLES

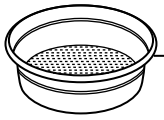

521994 14gr
514419 14gr ridgeless
516575 12gr
526208 18gr
700757 21gr
526758 24gr
521996 14gr
MICROFORI
MICROHOLES

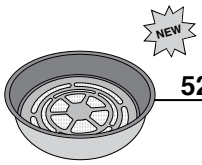

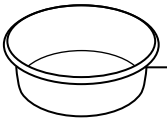

521902
BLIND FILTER

PORTAFILTRI

612143 = ø 1,1
612142 = ø 1,2

612522 = 3/8-M12
612525 = 3/8-M12 15°

617940
TAPPO CROMATO
CHROMATE PLUG

632317 = M12

617700 = 3/8
617716 = 3/8 15°

617702 = SHORT
617703 = LONG

617105=3/8 LONG
617705=3/8 SHORT
617717=3/8 SHORT 15°
617718=3/8 LONG 15°

617104 = 3/8 LONG
617706 = 3/8 SHORT
617719 = 3/8 SHORT 15°

620651
620651/N BOTTOMLESS FILTER

3/8
700024

618522
3/8

3/8
502003=SHORT
615599=LONG

617346=SHORT
617345=LONG
M16

612143 = ø 1,1
612142 = ø 1,2

617713 = M16-M10

632327 = M10

632329

612143 = ø 1,1
612142 = ø 1,2

612527 = M16-M10 15° 21g NR
612525 = 3/8 M12 15° 21g NR

632327 = M10
632328 = M12

632326 M16-M10

617711 = M16 15°
617722 = M16 15° NR
617720 = 3/8 15° NR

617712 = M16 15°
617723 = M16 15° NR
617721 = 3/8 15° NR

3/8
511672=SHORT
591733=LONG

M16
630086

630086/8
3/8

M16
630087

630087/8
3/8

M16
630085

630085/8
3/8

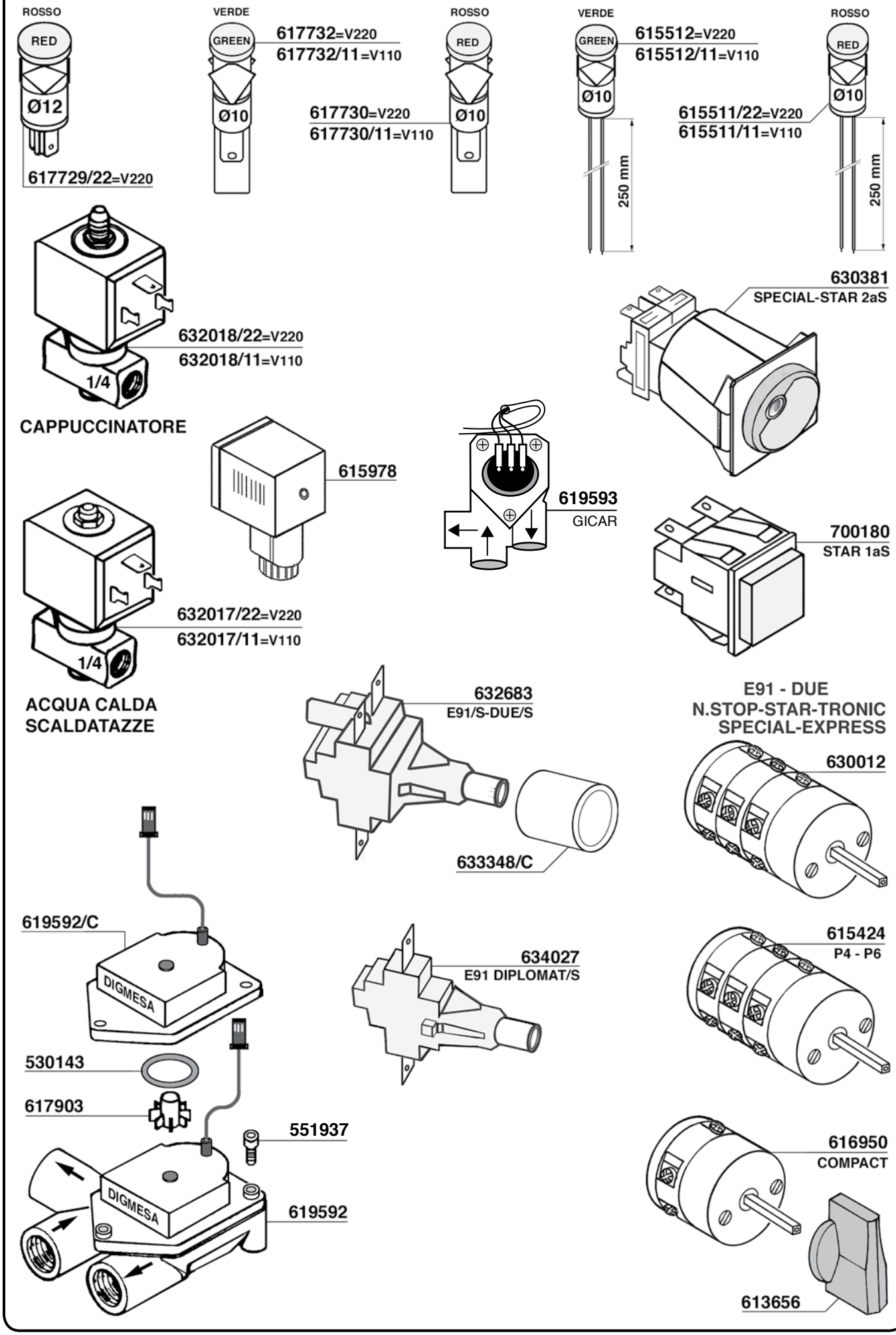
ROSSO
RED
Ø12
617729/22=V220
VERDE
GREEN
Ø10
617732=V220
617732/11=V110
ROSSO
RED
Ø10
617730=V220
617730/11=V110
VERDE
GREEN
Ø10
250 mm
615512=V220
615512/11=V110
ROSSO
RED
Ø10
250 mm
615511/22=V220
615511/11=V110
632018/22=V220
632018/11=V110
1/4
CAPPUCCINATORE
630381
SPECIAL-STAR 2aS
615978
619593
GICAR
700180
STAR 1aS
632017/22=V220
632017/11=V110
1/4
ACQUA CALDA
SCALDATAZZE
632683
E91/S-DUE/S
633348/C
E91 - DUE
N.STOP-STAR-TRONIC
SPECIAL-EXPRESS
630012
619592/C
DIGMESA
634027
E91 DIPLOMAT/S
615424
P4 - P6
530143
617903
551937
DIGMESA
619592
616950
COMPACT
613656

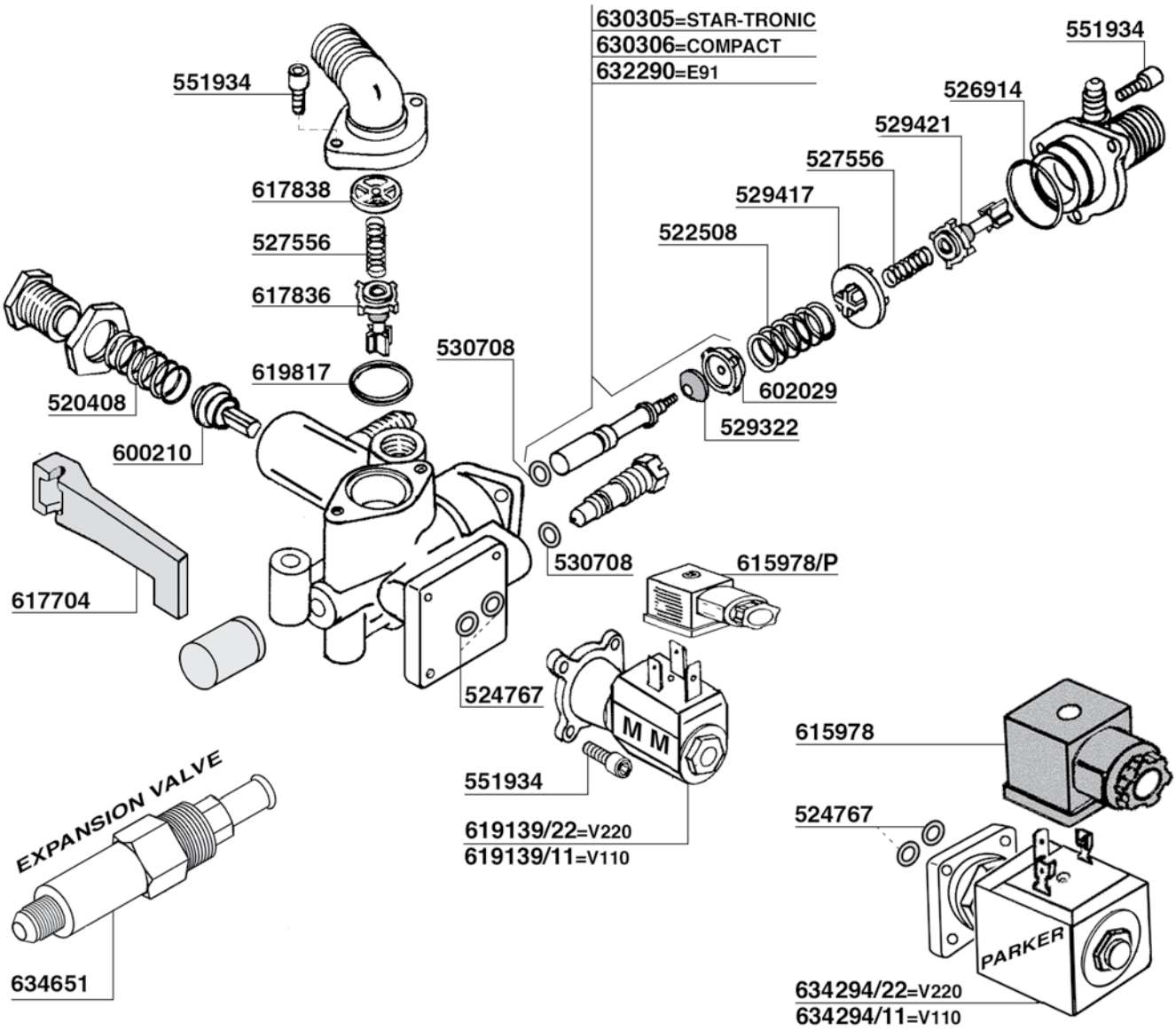
630305=STAR-TRONIC
630306=COMPACT
632290=E91
551934
551934
526914
529421
527556
529417
522508
617838
527556
617836
530708
619817
520408
600210
602029
529322
530708
615978/P
617704
524767
M M
551934
619139/22=V220
619139/11=V110
615978
524767
EXPANSION VALVE
PARKER
634651
634294/22=V220
634294/11=V110

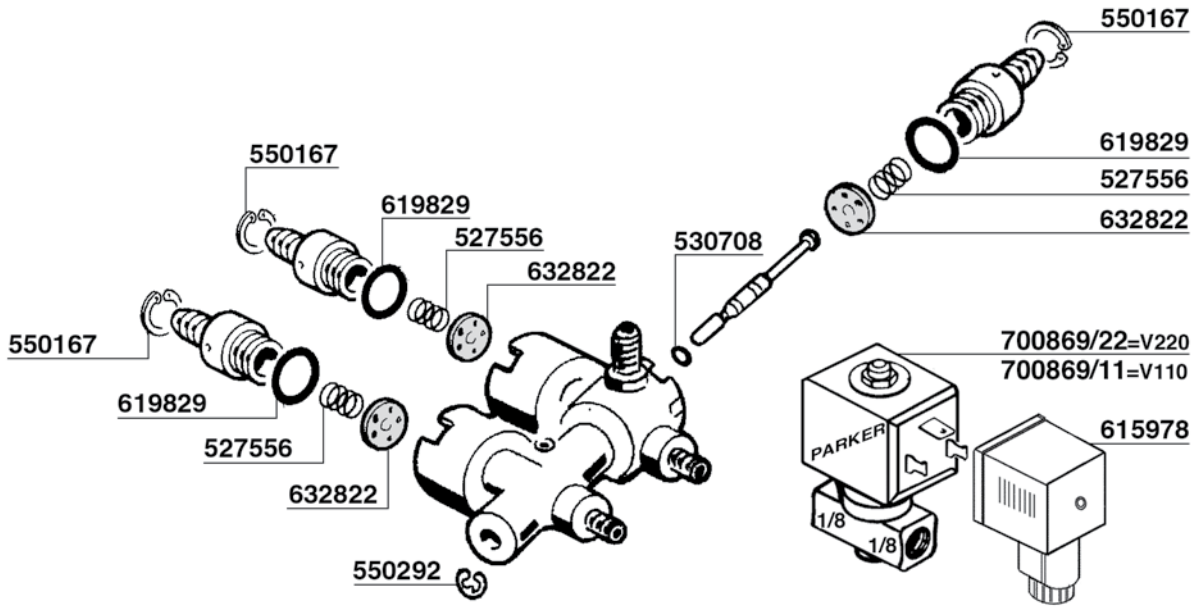
550167
619829
527556
632822
550167
619829
527556
632822
530708
550167
619829
527556
632822
700869/22=V220
700869/11=V110
PARKER
1/8
1/8
615978
550292

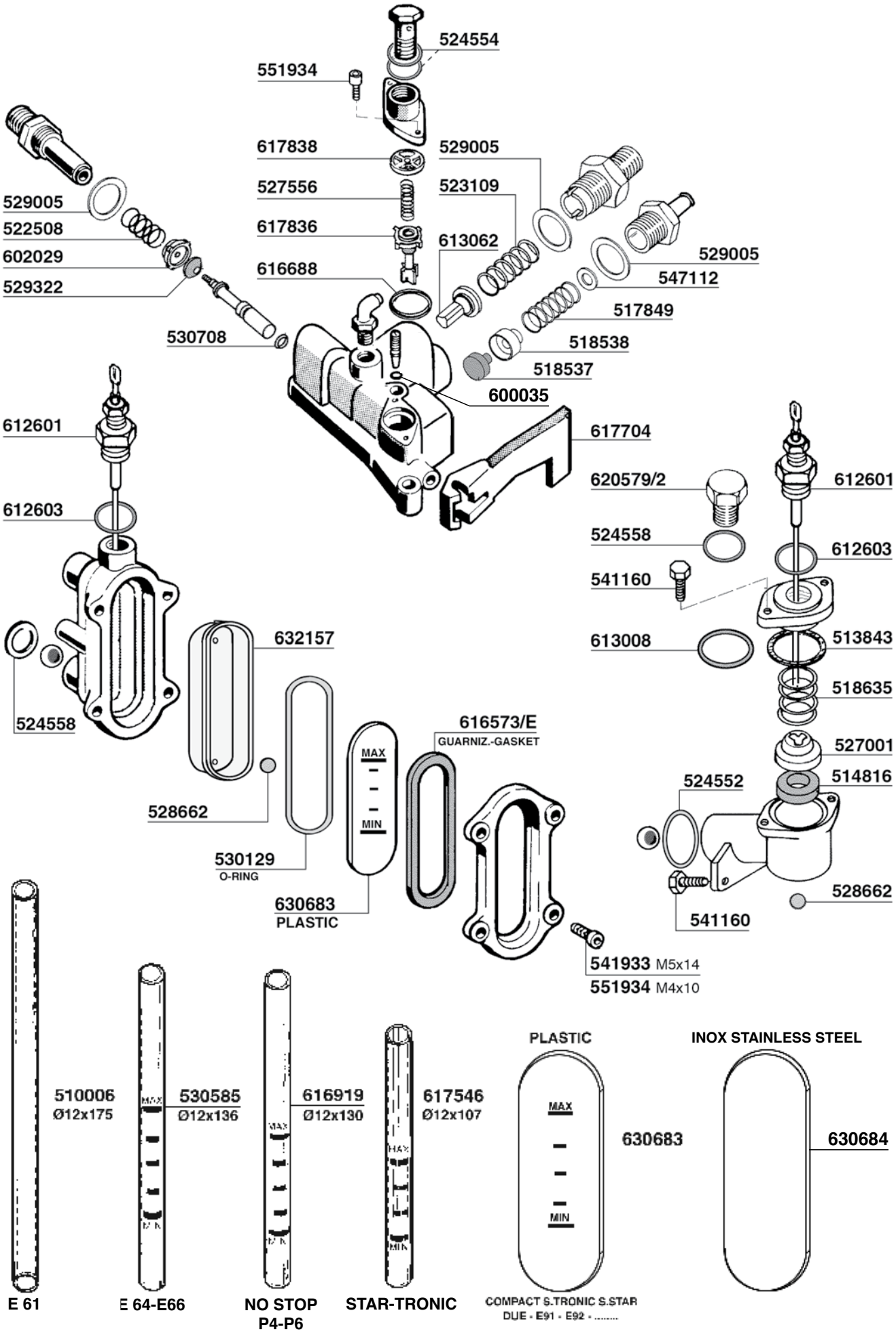
524554
551934
617838
529005
527556
523109
529005
522508
617836
613062
602029
616688
529005
529322
547112
517849
530708
518538
518537
600035
612601
617704
620579/2
612601
612603
524558
612603
541160
632157
613008
513843
518635
524558
616573/E
GUARNIZ.-GASKET
527001
MAX
MIN
524552
514816
528662
530129
O-RING
630683
PLASTIC
528662
541160
541933 M5x14
551934 M4x10
PLASTIC
INOX STAINLESS STEEL
510006
Ø12x175
530585
Ø12x136
616919
Ø12x130
617546
Ø12x107
630683
630684
E 61
E 64-E66
NO STOP
P4-P6
STAR-TRONIC
COMPACT S.TRONIC S.STAR
DUE - E91 - E92 - .....

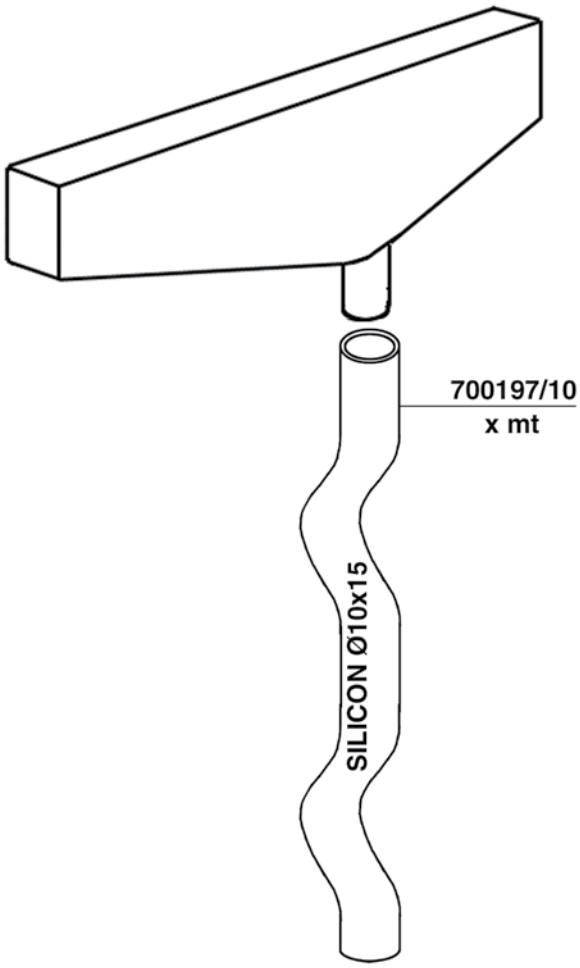
700197/10
x mt
SILICON Ø10x15

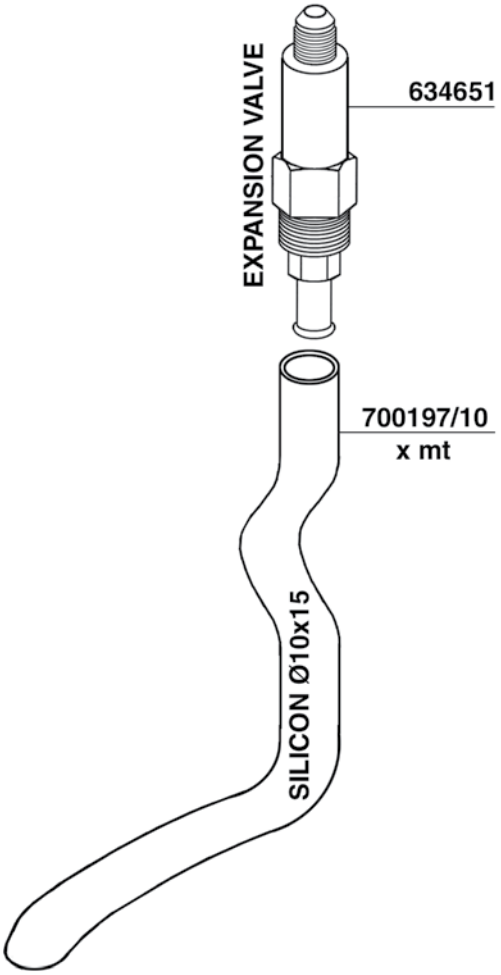
EXPANSION VALVE
634651
700197/10
x mt
SILICON Ø10x15

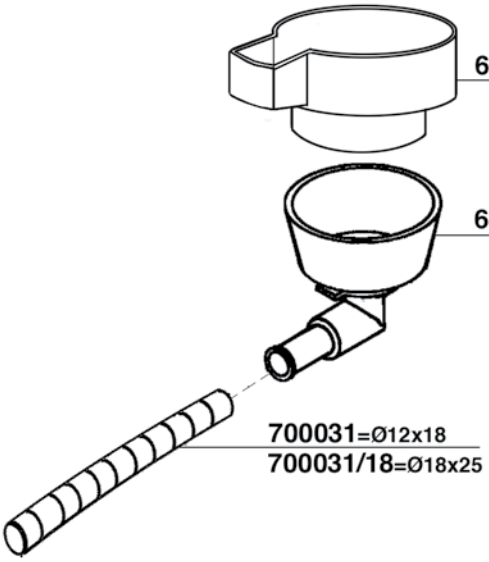
634635
632932
700031=Ø12x18
700031/18=Ø18x25

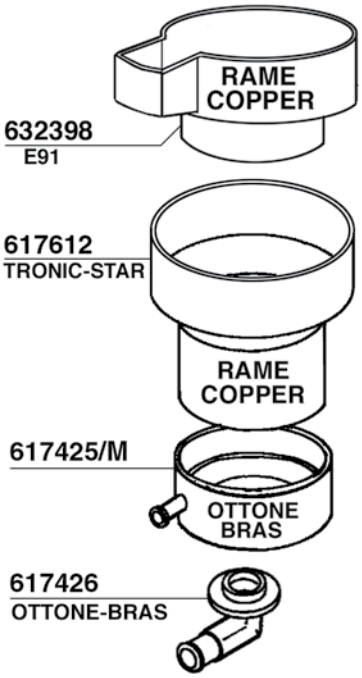
RAME
COPPER
632398
E91
617612
TRONIC-STAR
RAME
COPPER
617425/M
OTTONE
BRAS
617426
OTTONE-BRAS

NUOVA RICAMBI PARTI COMPATIBILI FAEMA Tav. 08

N. STOP-COMPACT

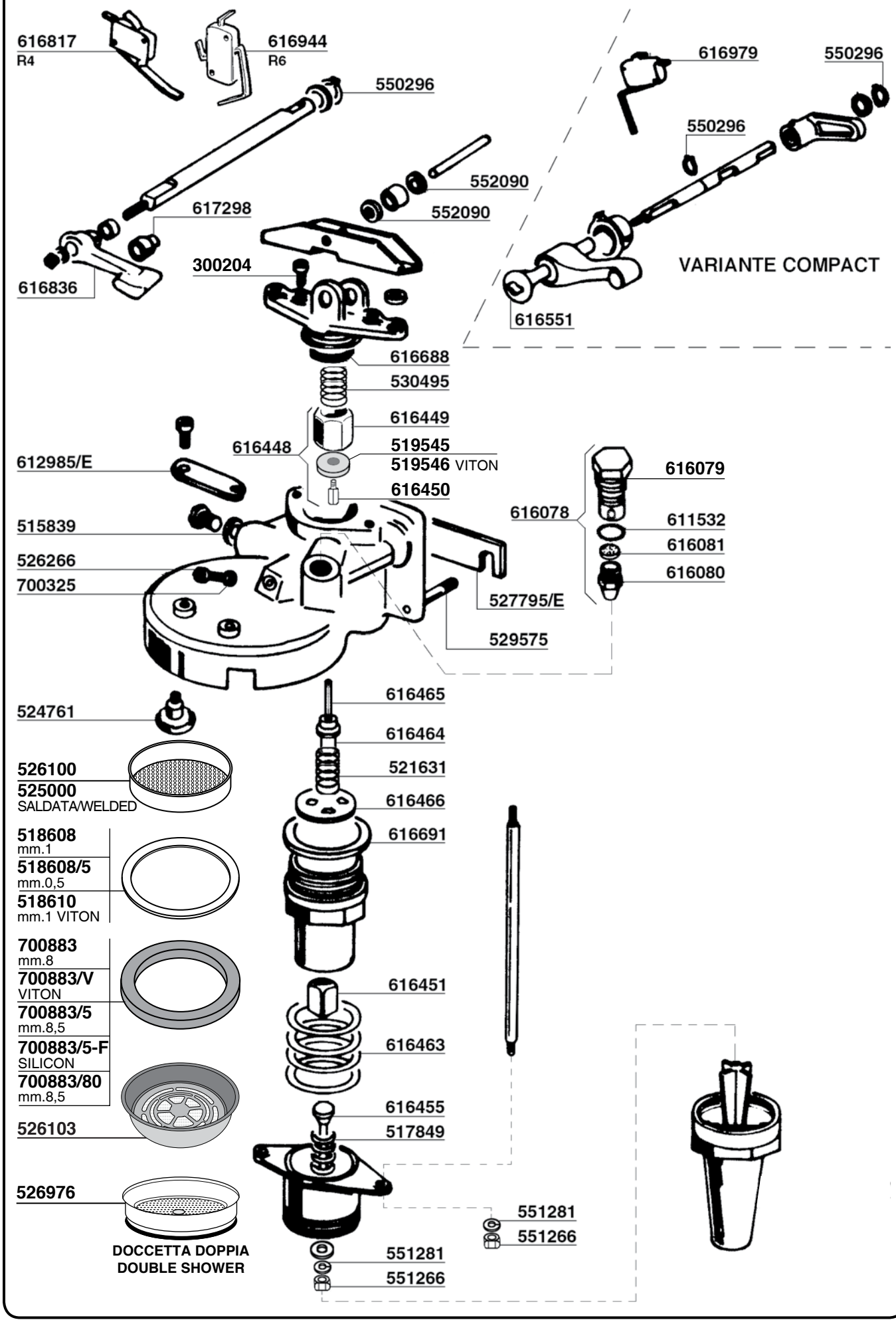

P4/P6 - E64/E66

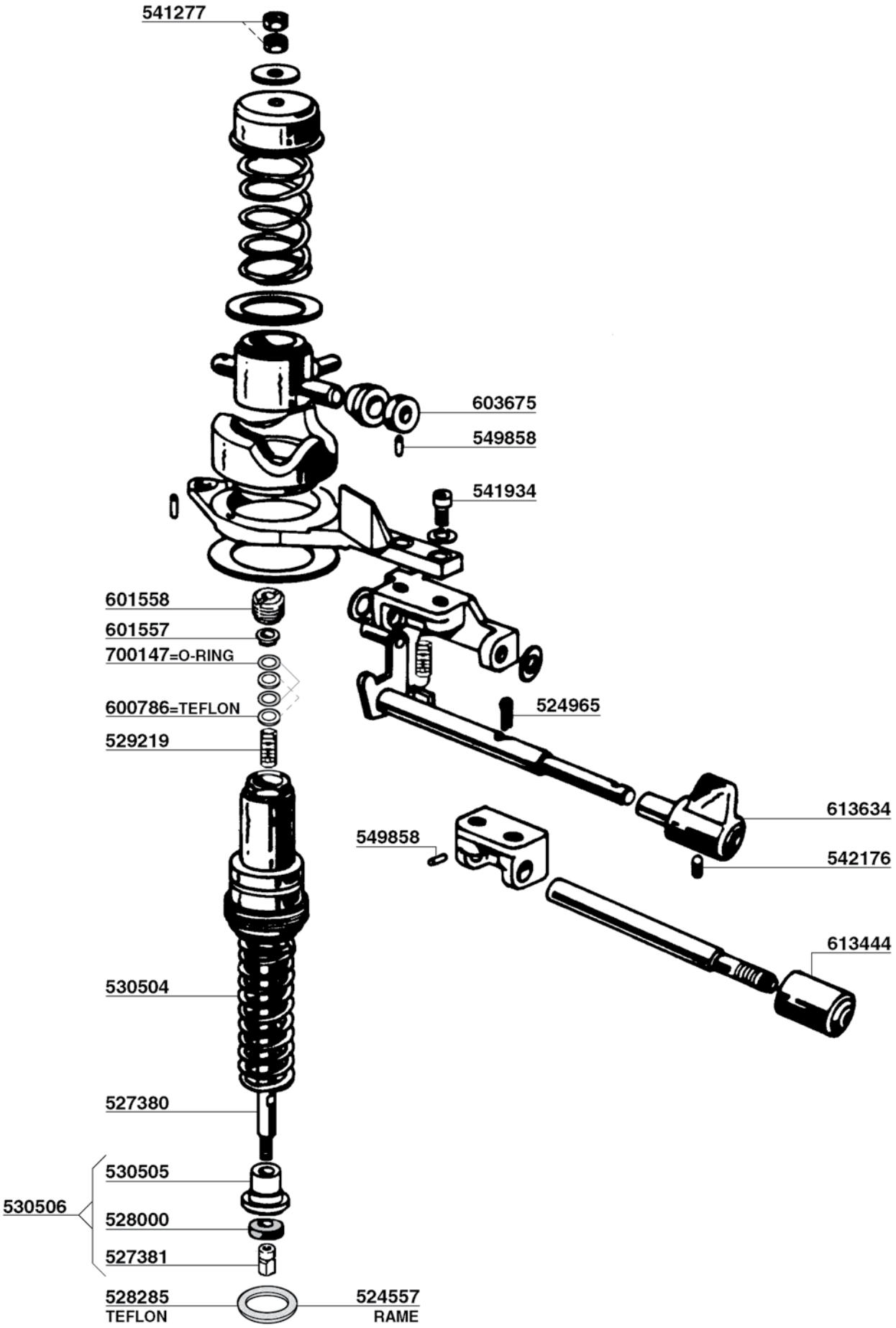
541277
603675
549858
541934
601558
601557
700147=O-RING
600786=TEFLON
529219
524965
613634
549858
542176
613444
530504
527380
530505
530506
528000
527381
528285
TEFLON
524557
RAME

P4/P6 - E64/E66

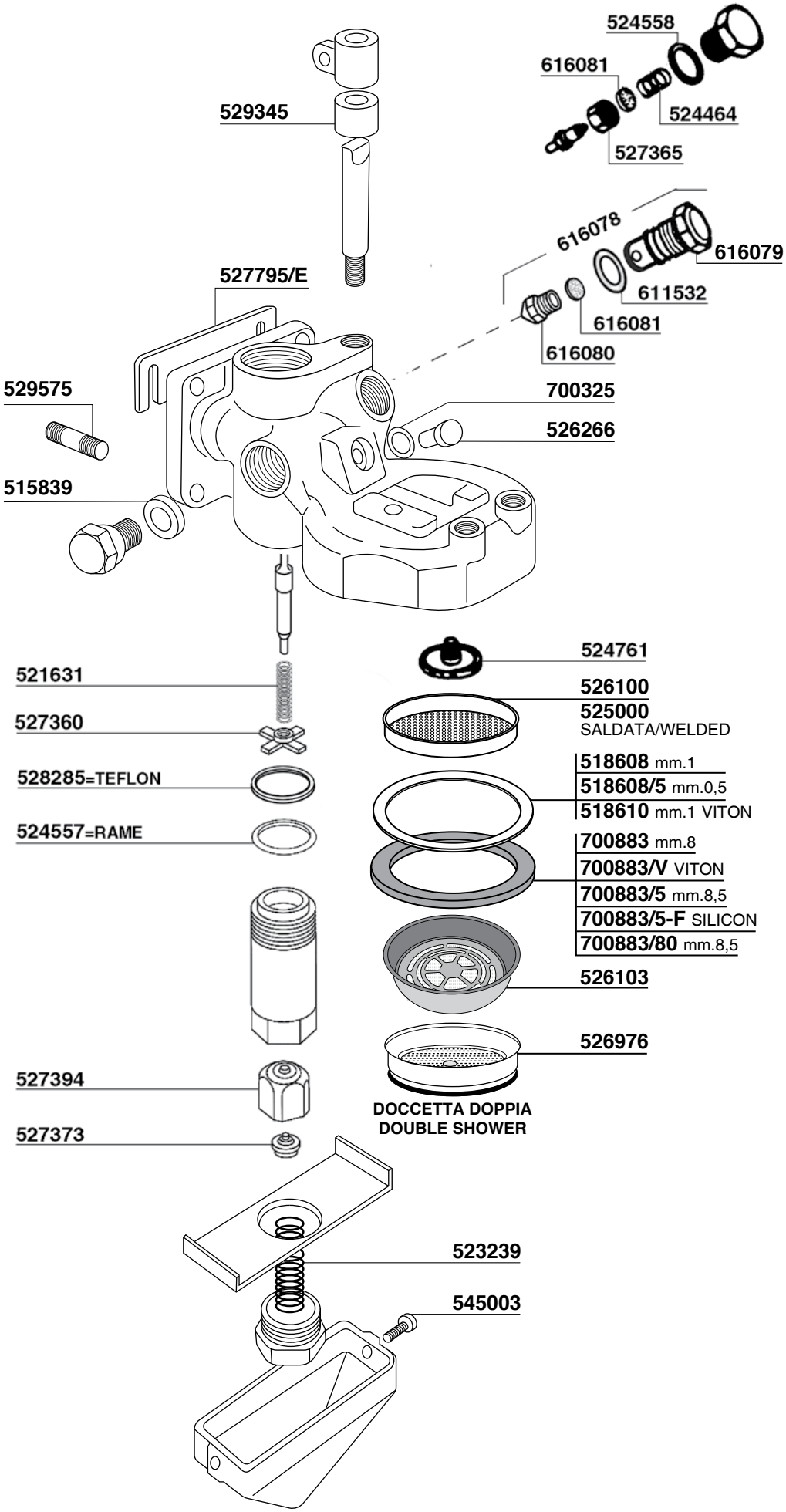
524558
616081
524464
527365
529345
616078
616079
611532
616081
616080
527795/E
529575
700325
526266
515839
524761
521631
526100
525000
SALDATA/WELDED
527360
518608 mm.1
518608/5 mm.0,5
528285=TEFLON
518610 mm.1 VITON
524557=RAME
700883 mm.8
700883/V VITON
700883/5 mm.8,5
700883/5-F SILICON
700883/80 mm.8,5
526103
526976
527394
DOCCETTA DOPPIA
DOUBLE SHOWER
527373
523239
545003

P6 - E66

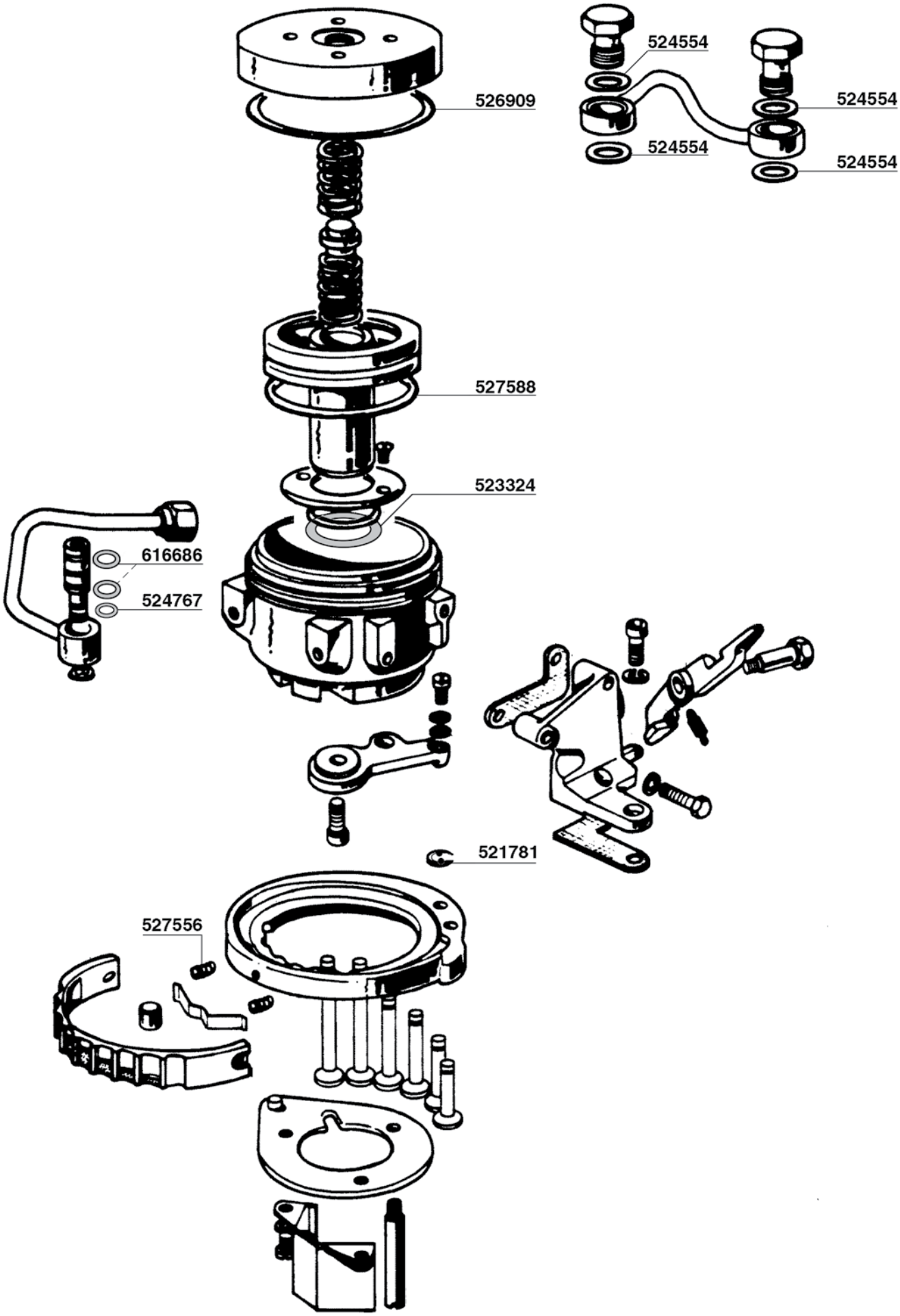
524554
526909
524554
524554
524554
527588
523324
616686
524767
521781
527556

NO STOP/A - P6

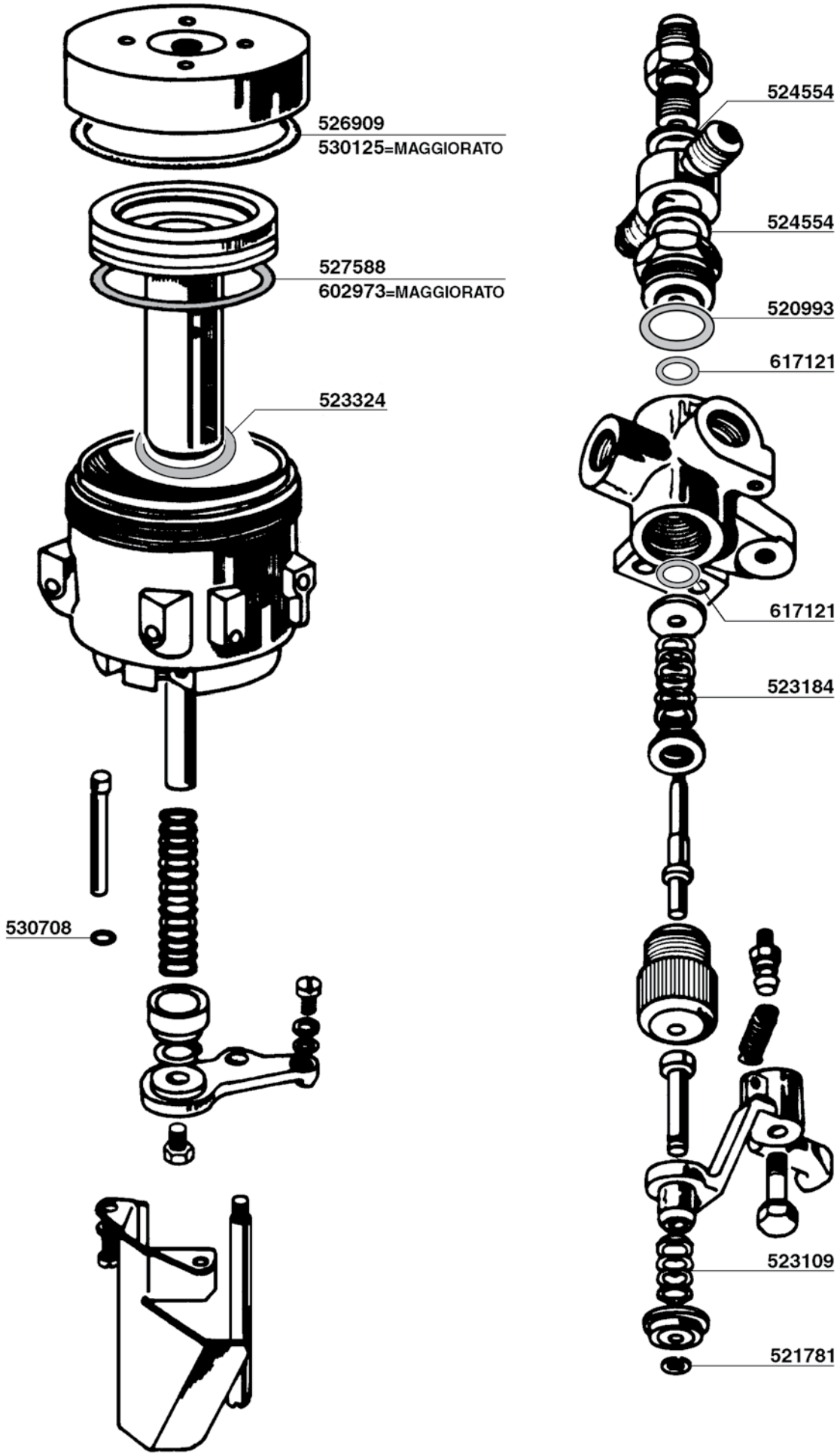
526909
530125=MAGGIORATO
527588
602973=MAGGIORATO
523324
530708
524554
524554
520993
617121
617121
523184
523109
521781

E61 - ARIETE

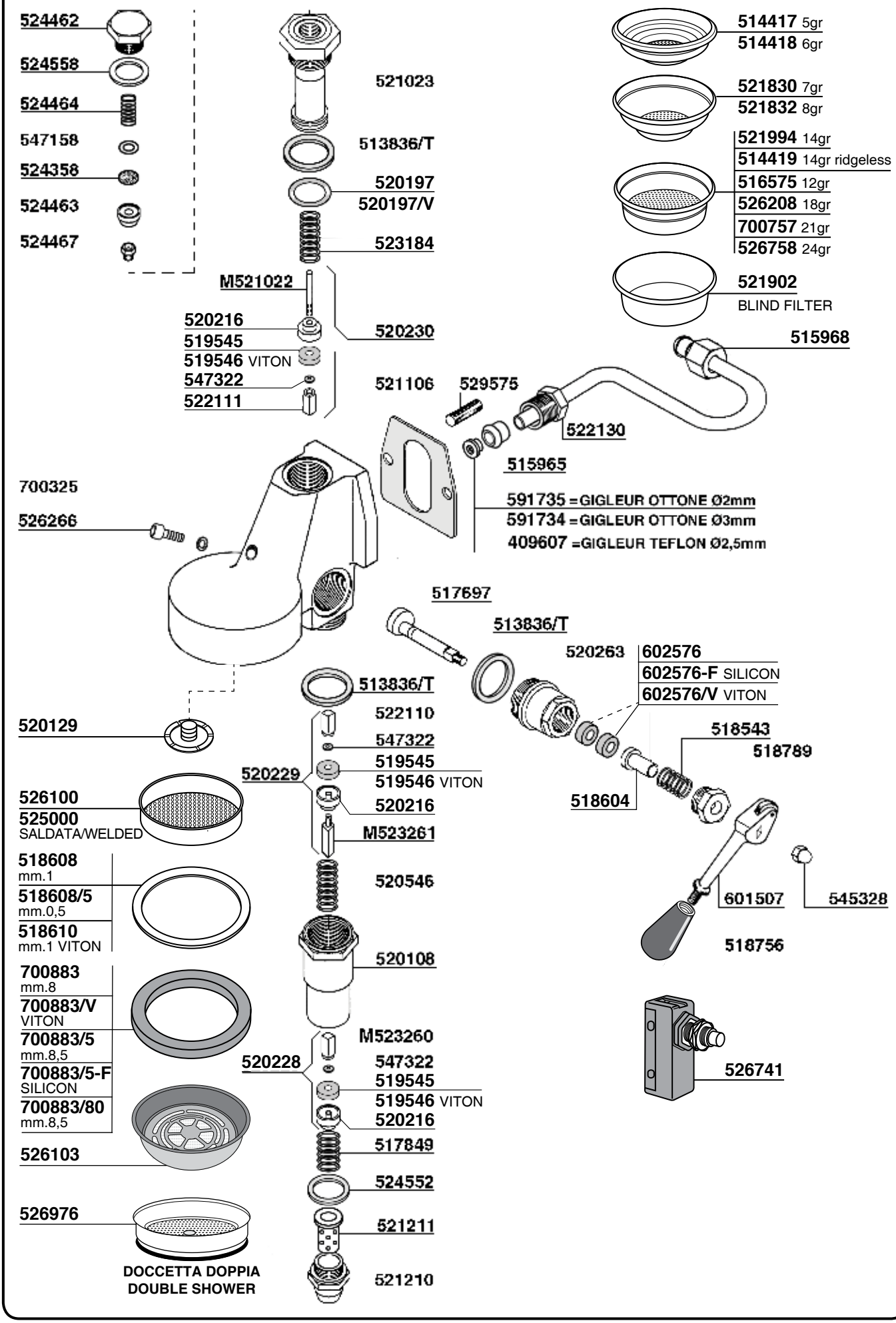
524462
524558
524464
547158
524358
524463
524467
521023
513836/T
520197
520197/V
523184
M521022
520216
519545
519546 VITON
547322
522111
520230
521106
529575
522130
515968
514417 5gr
514418 6gr
521830 7gr
521832 8gr
521994 14gr
514419 14gr ridgeless
516575 12gr
526208 18gr
700757 21gr
526758 24gr
521902
BLIND FILTER
700325
526266
515965
591735 =GIGLEUR OTTONE Ø2mm
591734 =GIGLEUR OTTONE Ø3mm
409607 =GIGLEUR TEFLON Ø2,5mm
517697
513836/T
520263
602576
602576-F SILICON
602576/V VITON
518543
518789
518604
601507
545328
518756
526741
520129
513836/T
522110
547322
520229
519545
519546 VITON
520216
M523261
526100
525000
SALDATA/WELDED
518608
mm.1
518608/5
mm.0,5
518610
mm.1 VITON
520546
520108
700883
mm.8
700883/V
VITON
700883/5
mm.8,5
700883/5-F
SILICON
700883/80
mm.8,5
M523260
520228
547322
519545
519546 VITON
520216
517849
526103
524552
526976
521211
521210
DOCCETTA DOPPIA
DOUBLE SHOWER

ZODIACO - T1

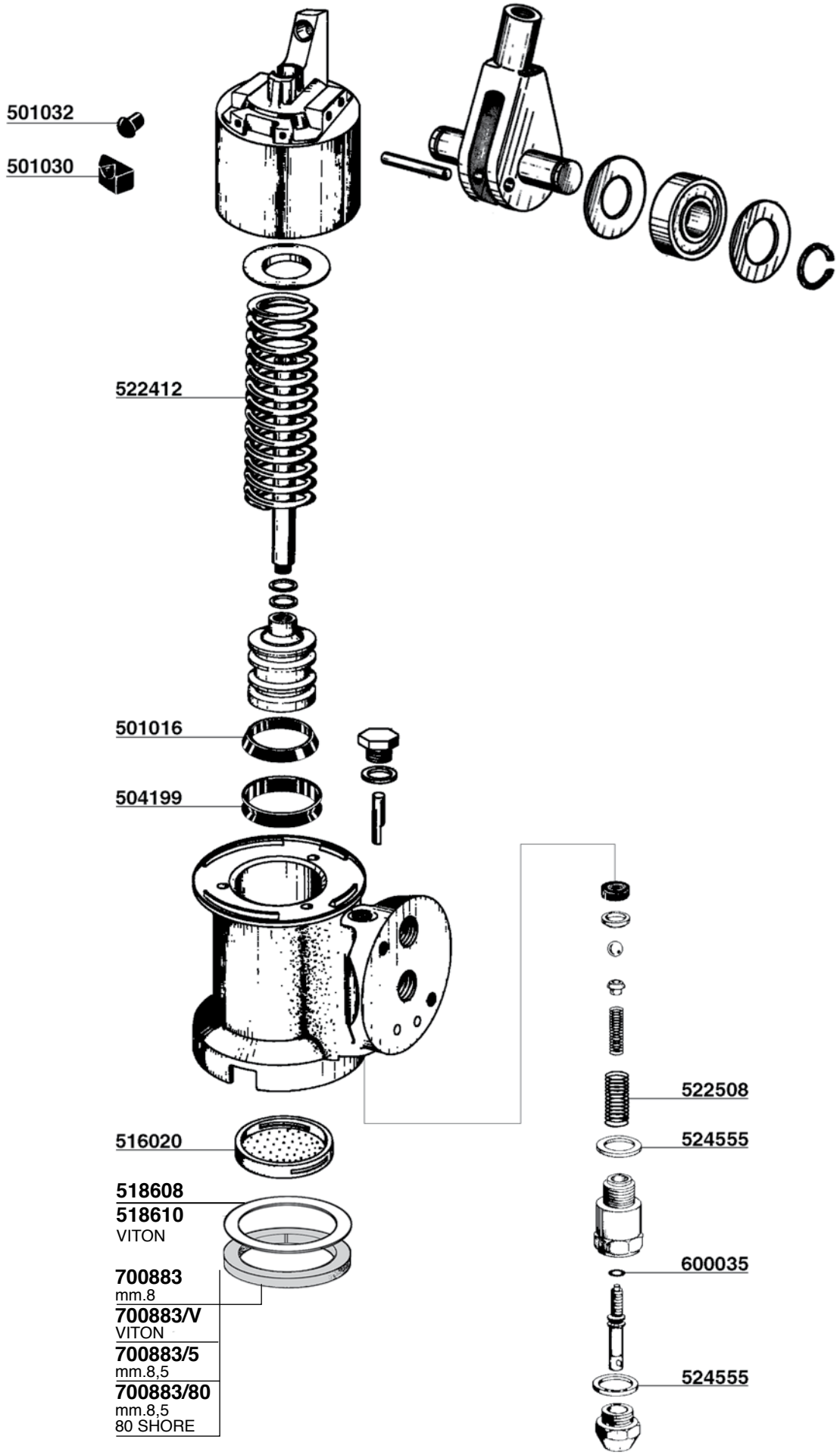
501032
501030
522412
501016
504199
516020
518608
518610
VITON
700883
mm.8
700883/V
VITON
700883/5
mm.8,5
700883/80
mm.8,5
80 SHORE
522508
524555
600035
524555

N.STOP-COMPACT - EXPRESS-TRONIC

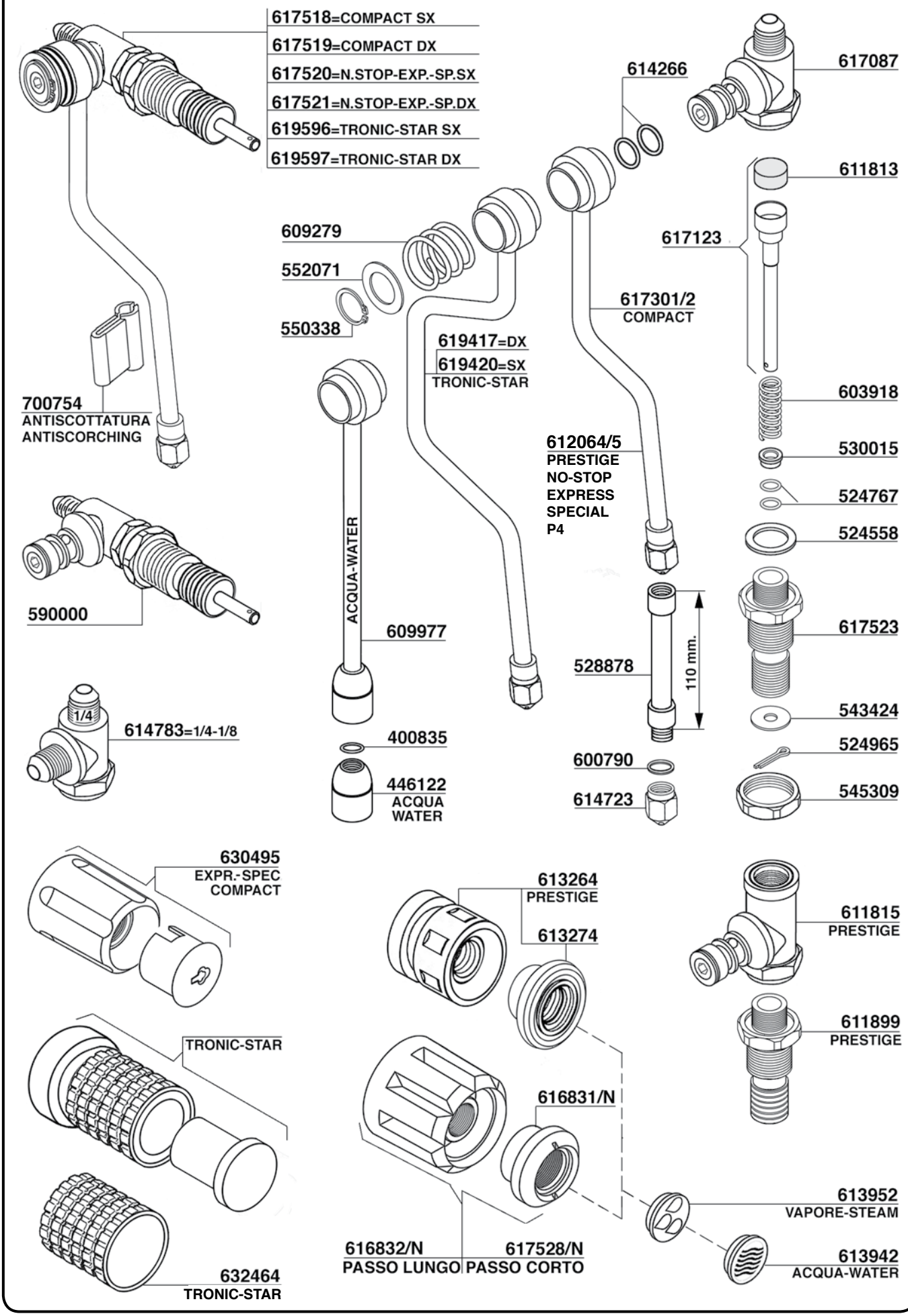

E91 - DUE - DIPLOMAT

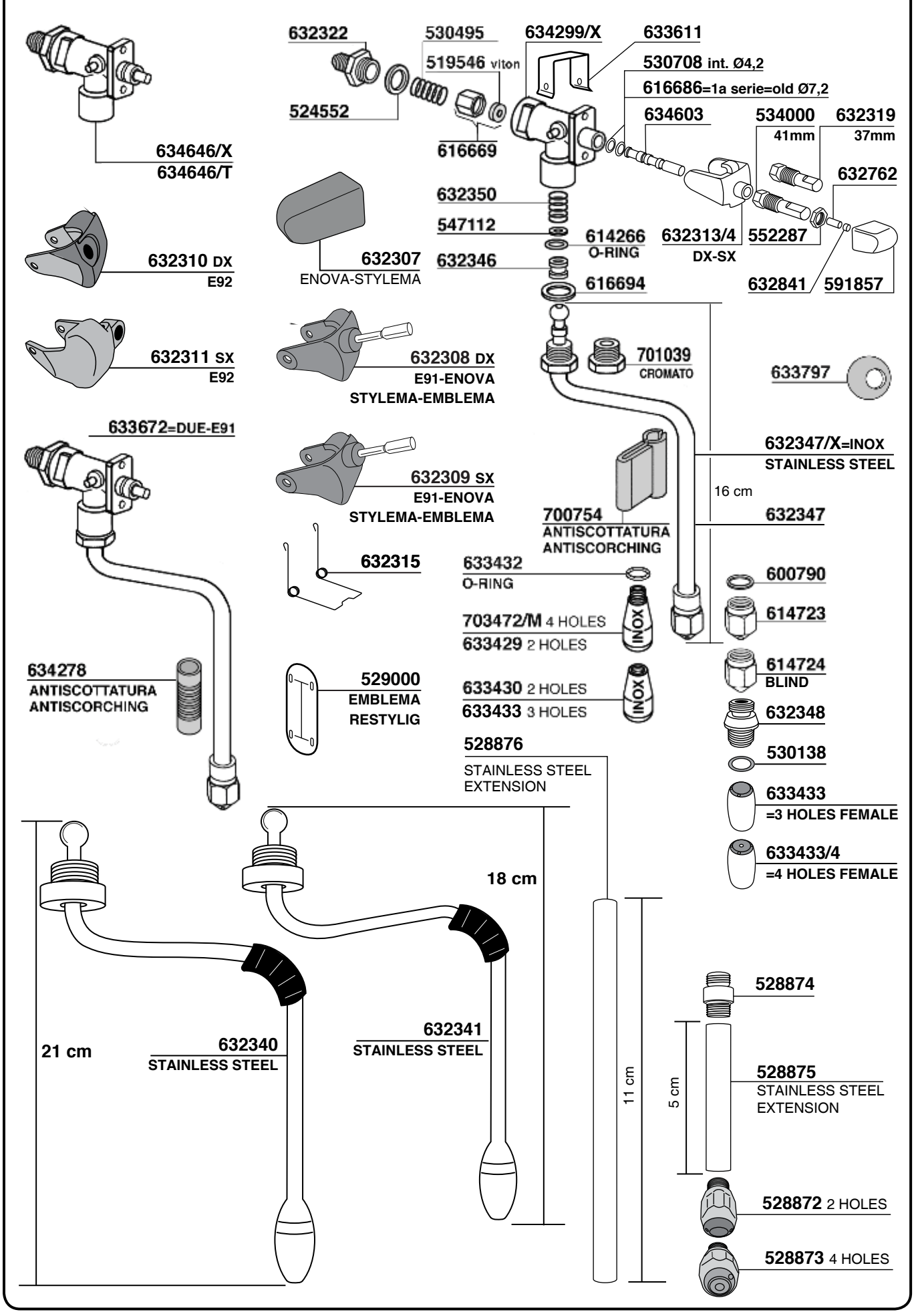

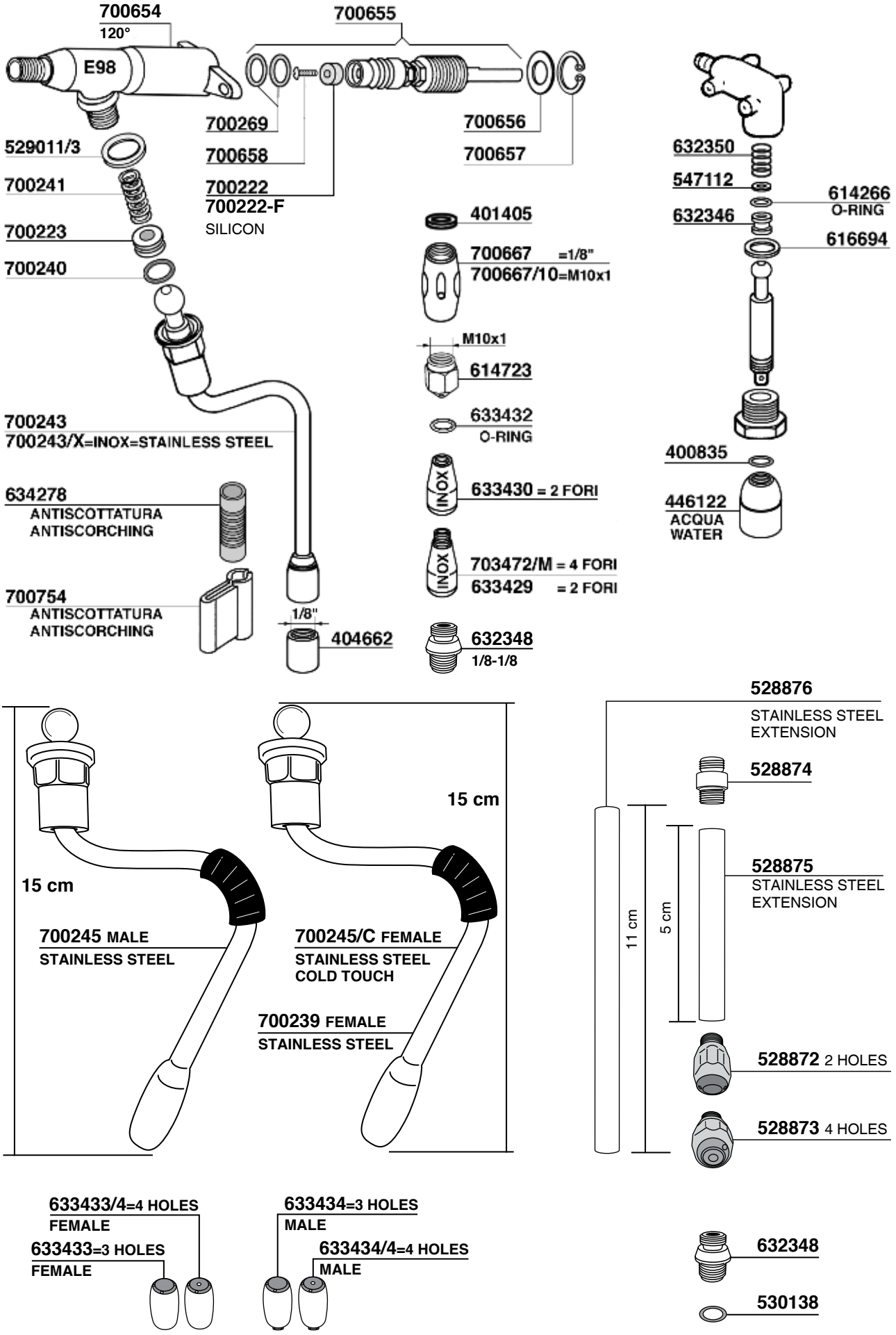
700654
120°
E98
700655
700269
700658
700222
700222-F
SILICON
700656
700657
529011/3
700241
700223
700240
401405
700667 =1/8"
700667/10=M10x1
M10x1
614723
633432
O-RING
700243
700243/X=INOX=STAINLESS STEEL
633430 = 2 FORI
634278
ANTISCOTTATURA
ANTISCORCHING
703472/M = 4 FORI
633429 = 2 FORI
700754
ANTISCOTTATURA
ANTISCORCHING
1/8"
404662
632348
1/8-1/8
632350
547112
614266
O-RING
632346
616694
400835
446122
ACQUA
WATER
15 cm
15 cm
700245 MALE
STAINLESS STEEL
700245/C FEMALE
STAINLESS STEEL
COLD TOUCH
700239 FEMALE
STAINLESS STEEL
528876
STAINLESS STEEL
EXTENSION
528874
528875
STAINLESS STEEL
EXTENSION
11 cm
5 cm
528872 2 HOLES
528873 4 HOLES
633433/4=4 HOLES
FEMALE
633433=3 HOLES
FEMALE
633434=3 HOLES
MALE
633434/4=4 HOLES
MALE
632348
530138

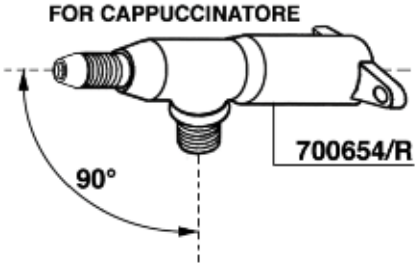
FOR CAPPUCCINATORE
90°
700654/R

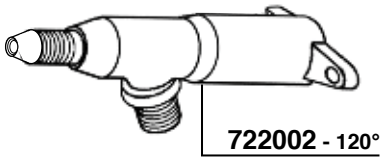
722002 - 120°

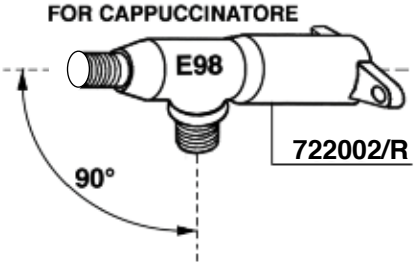
FOR CAPPUCCINATORE
E98
90°
722002/R

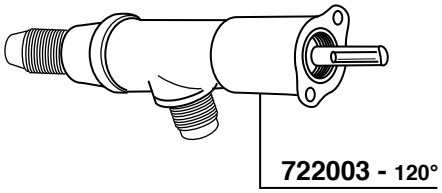
722003 - 120°

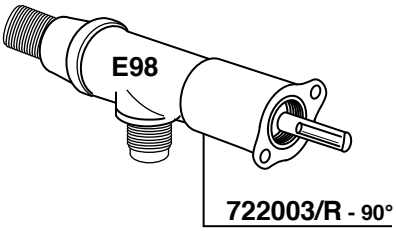
E98
722003/R - 90°

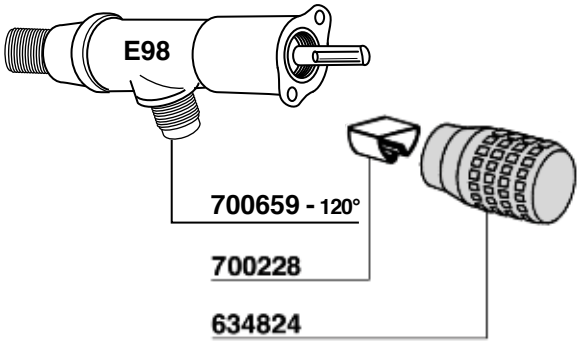
E98
700659 - 120°
700228
634824

700179/22=V220
700179/11=V110
615977
632018/22=V220
632018/11=V110
CAPPUCCINATORE
615978
616694
530137
530136
611532
611532
530138
700617
530139
530140
700197
SILICON Ø 4x7
700910
CAPUCCINO ELEGANT
STAINLESS STEEL
700197/8
SILICON Ø 5x8
700914
PERNO
REGOLAZIONE
700913
KIT O-RING

522169
522167
602576
602576-F SILICON
602576/V VITON
700038
522168
547112
519545
519546 VITON
515499
703432
526955
526956

530585
513843
514816
528662
527001
518635
541951
524552

E61-ARIETE-ZODIACO

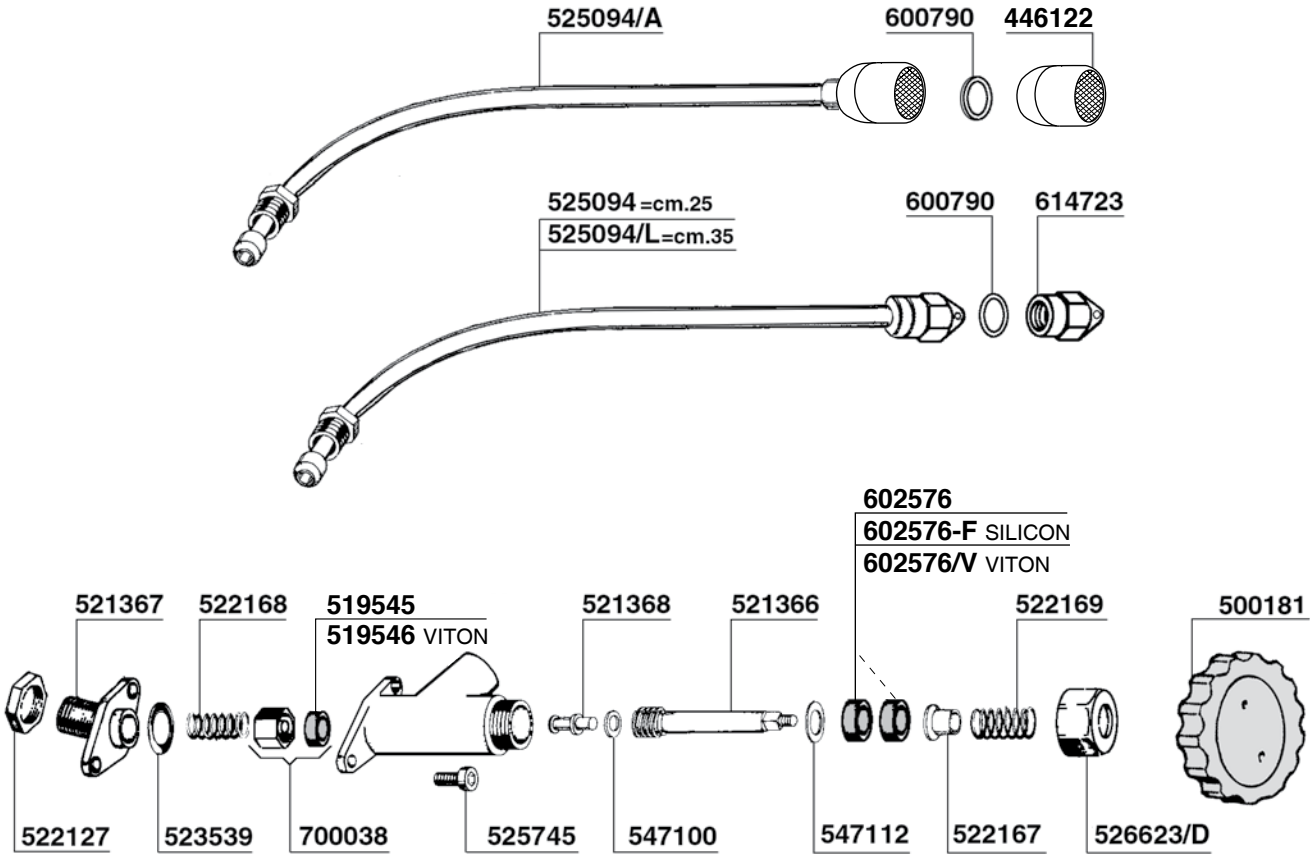

RUBINETTO CON TUBO SNODATO
STEAM / WATER VALVE WITH ARTICULATED PIPE

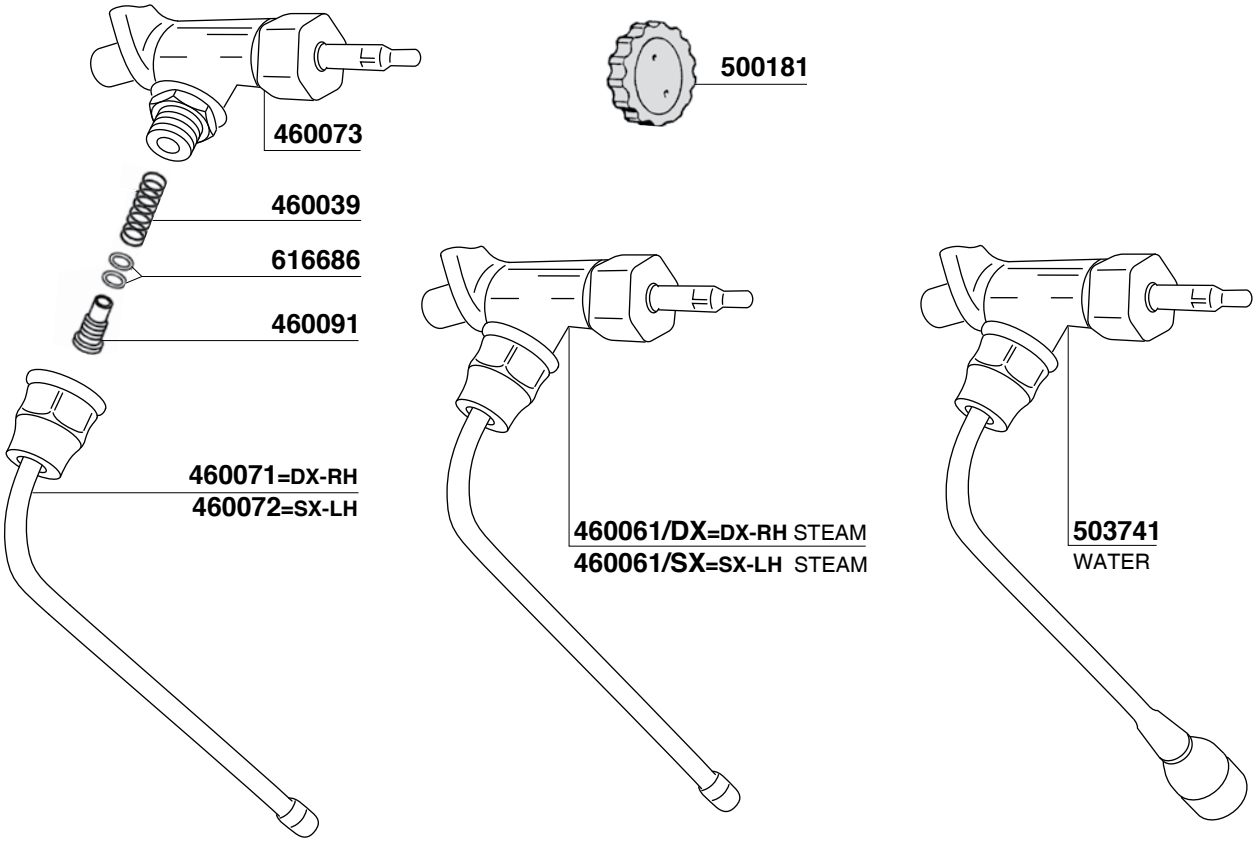

E61-ARIETE-ZODIACO

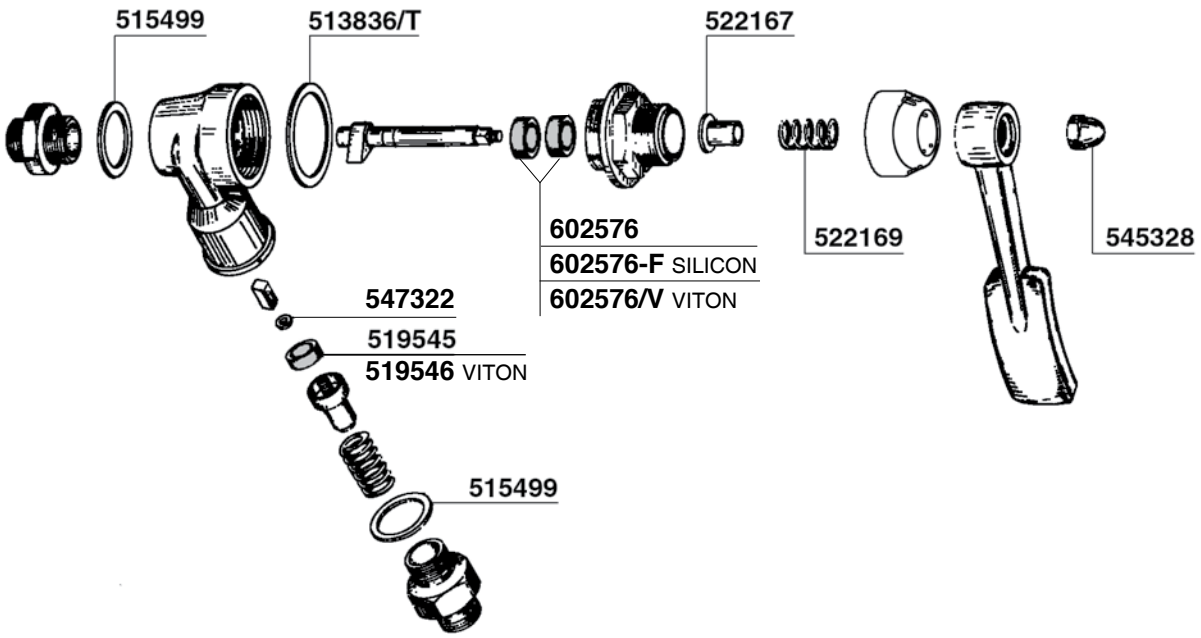

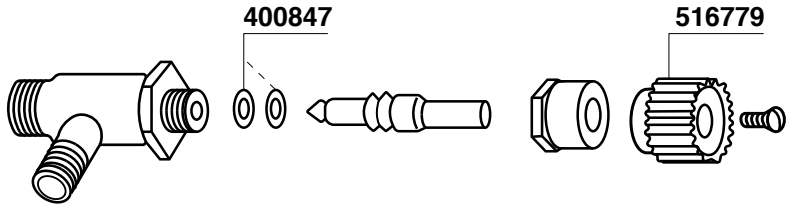

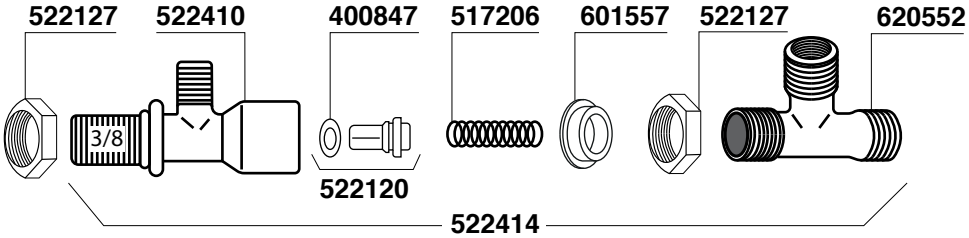

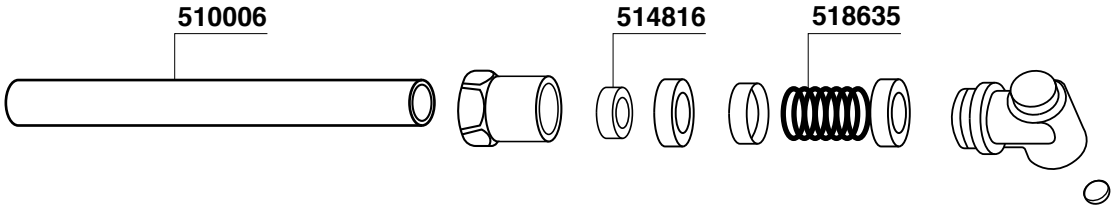

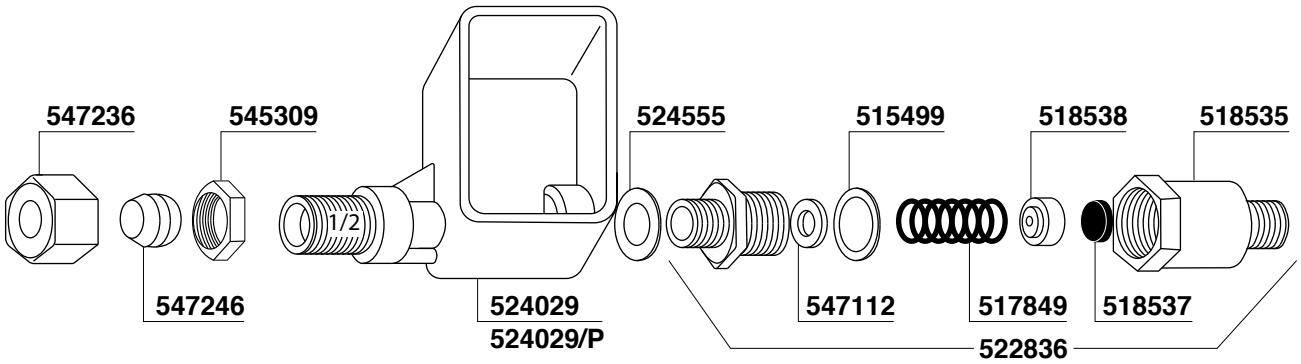

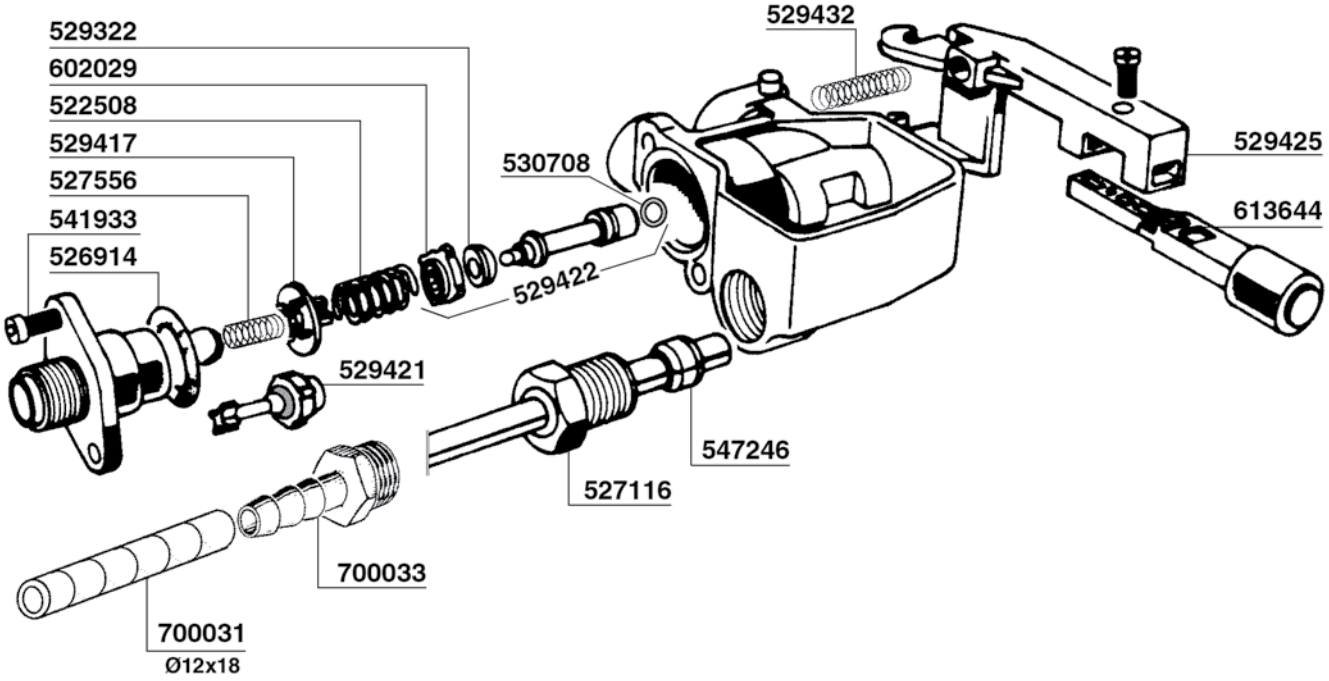
529322
602029
522508
529417
527556
541933
526914
529432
530708
529425
613644
529422
529421
547246
527116
700033
700031
Ø12x18

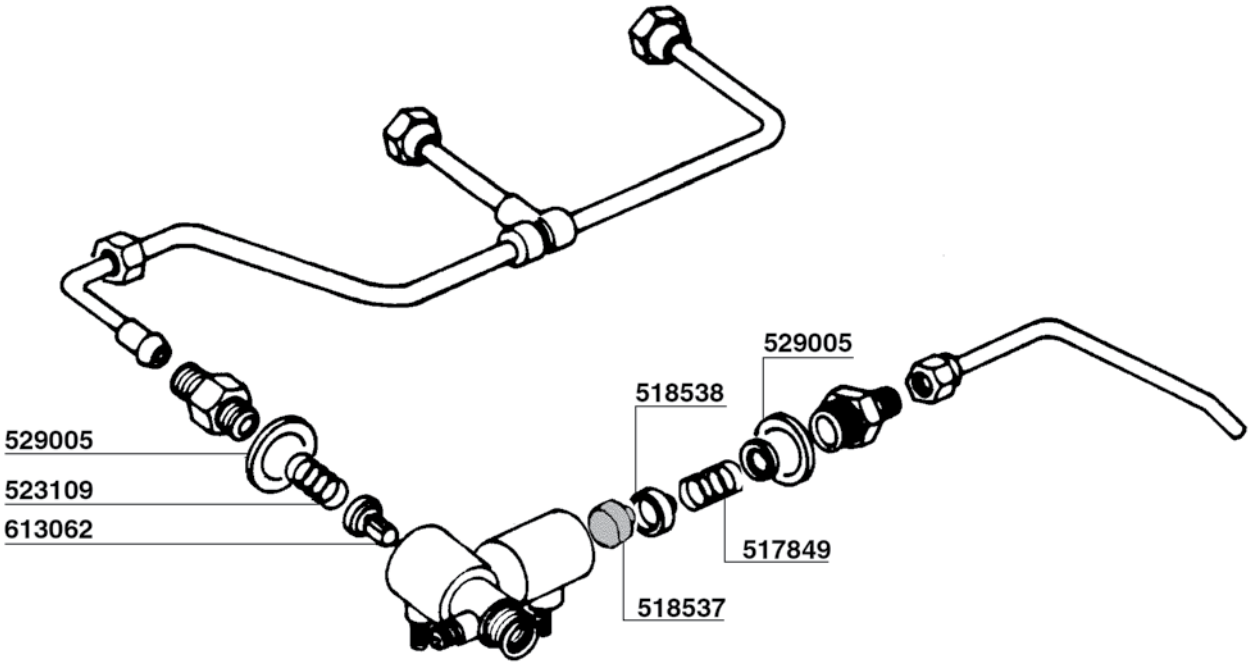
529005
523109
613062
518538
529005
517849
518537

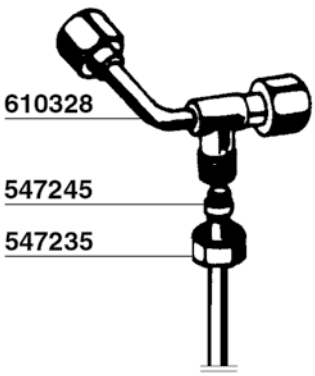
610328
547245
547235

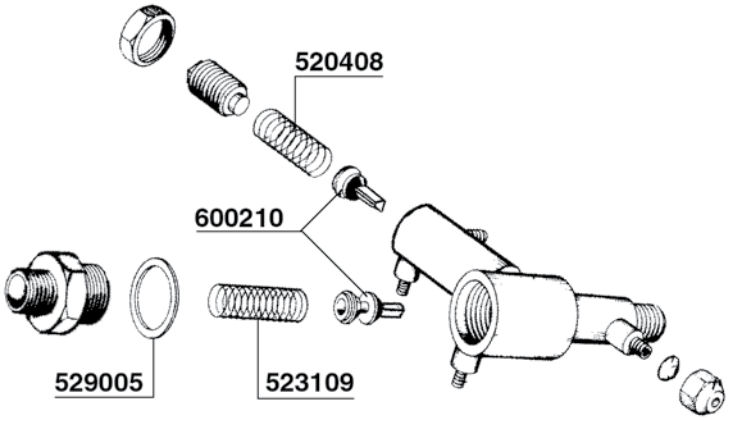
520408
600210
529005
523109

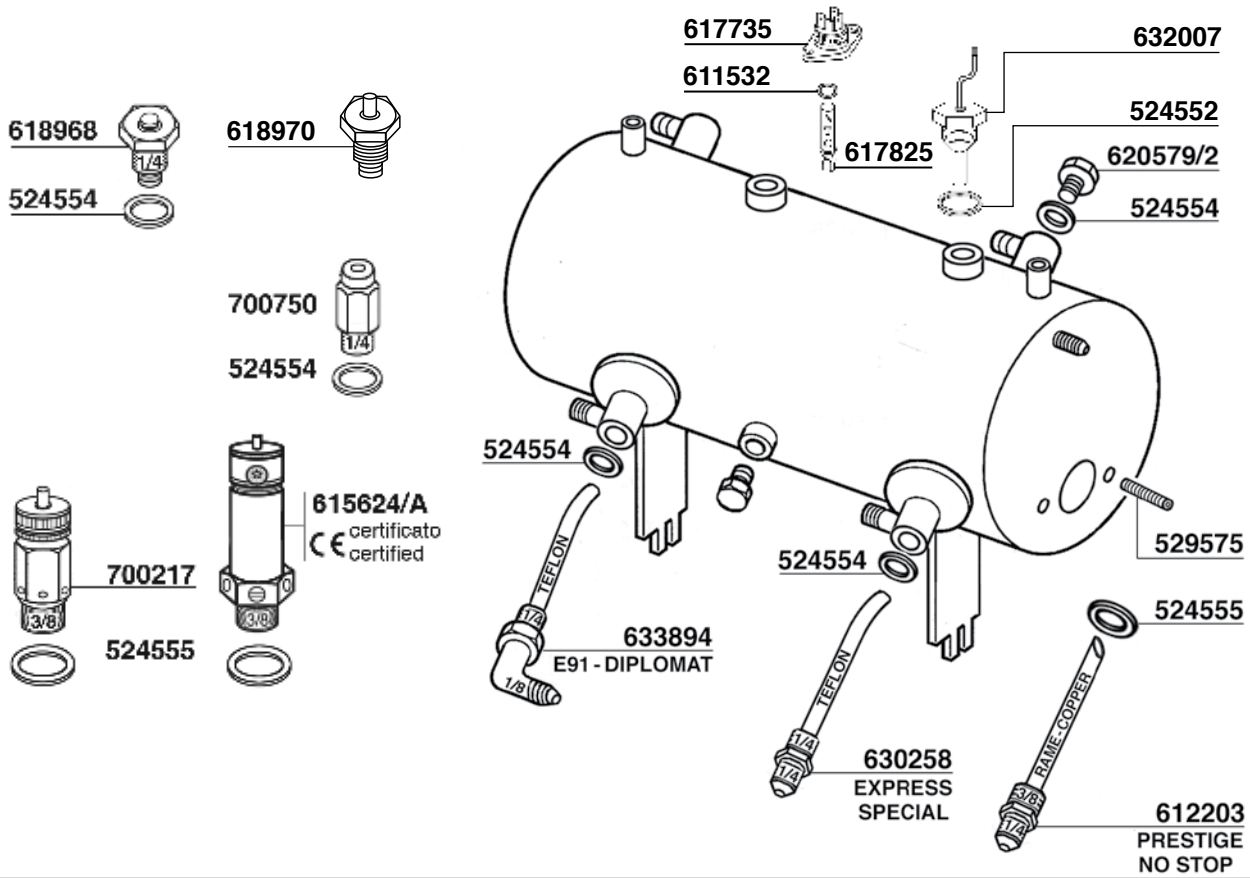
617735
611532
632007
524552
620579/2
524554
617825
618968
1/4
524554
618970
700750
1/4
524554
524554
615624/A
certificato
certified
700217
3/8
524555
3/8
TEFLON
1/4
633894
E91 - DIPLOMAT
1/8
524554
529575
524555
TEFLON
1/4
630258
EXPRESS
SPECIAL
1/4
RAME-COPPER
3/8
1/4
612203
PRESTIGE
NO STOP

COMPACT

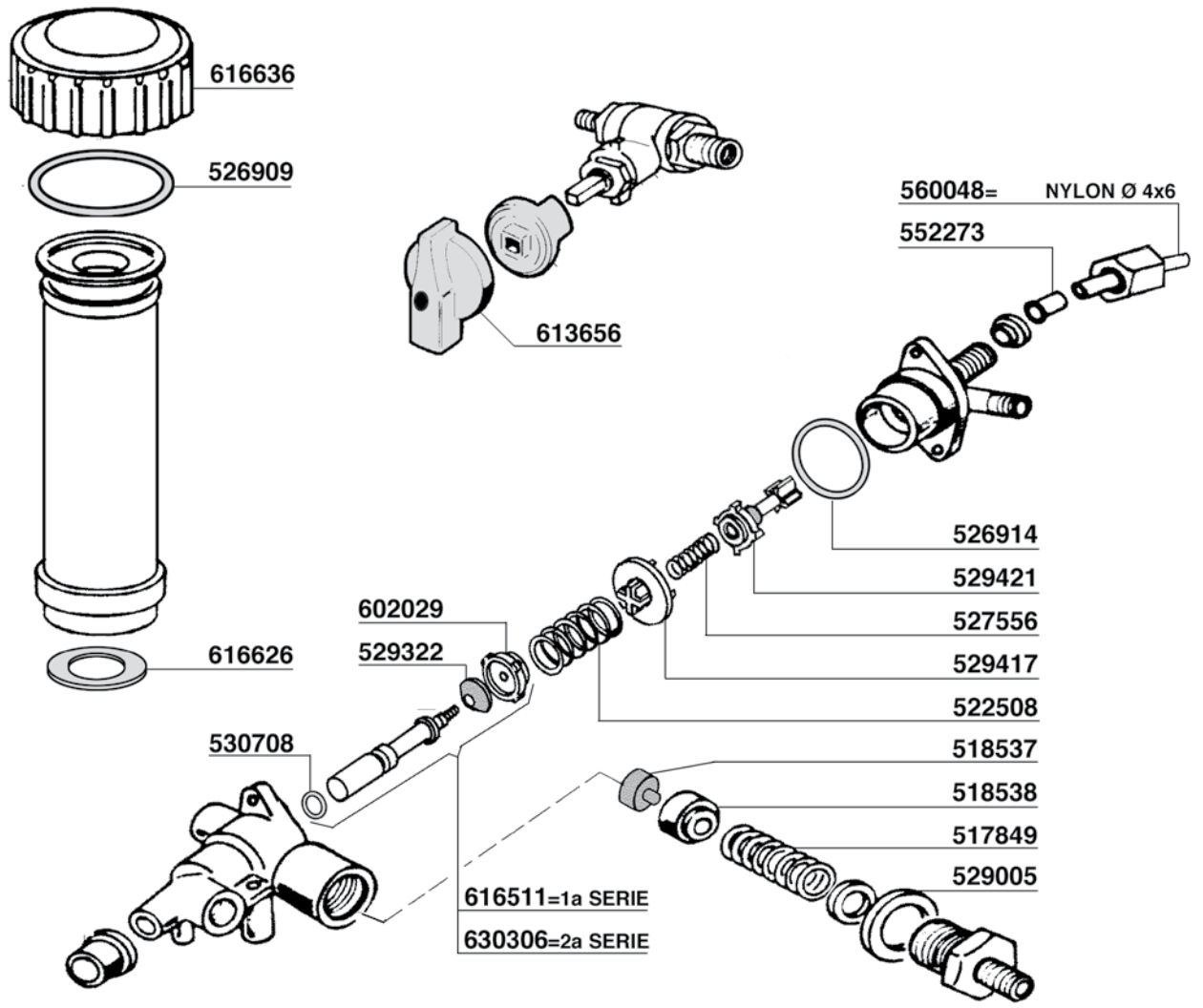
616636
526909
616626
613656
560048= NYLON Ø 4x6
552273
526914
529421
527556
529417
522508
518537
518538
517849
529005
602029
529322
530708
616511=1a SERIE
630306=2a SERIE

E61-ARIETE-ZODIACO

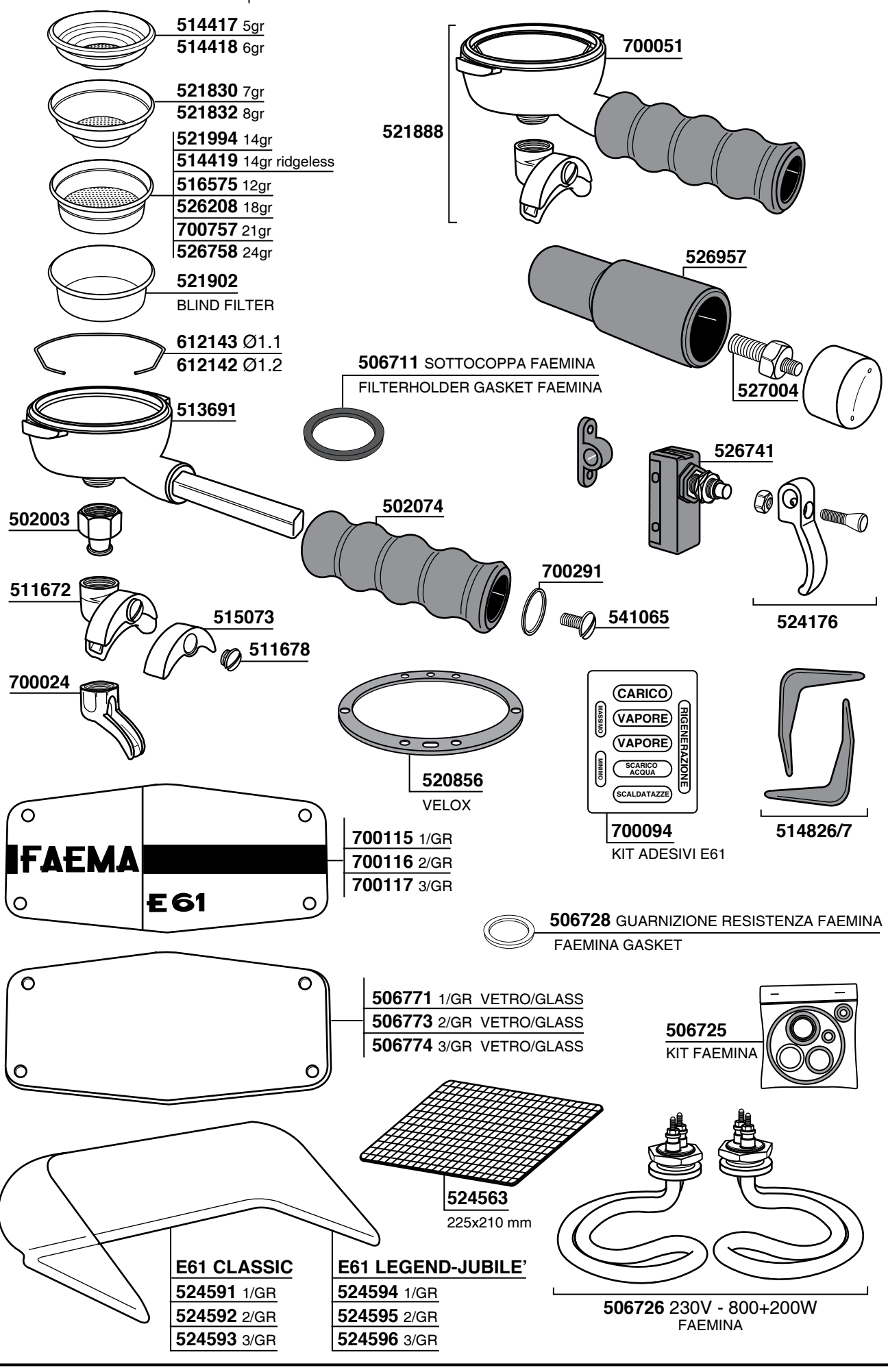

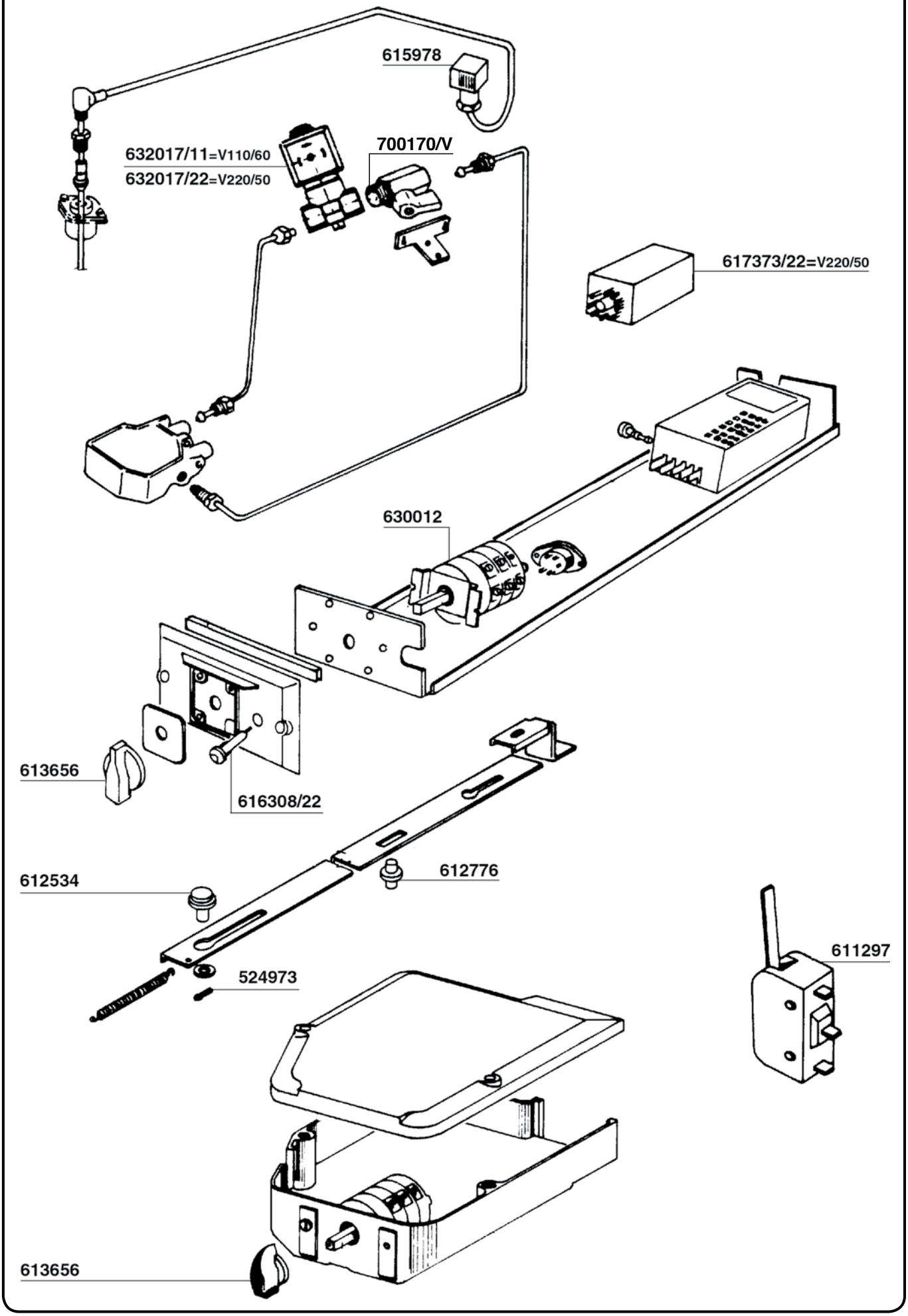
615978
632017/11=V110/60
632017/22=V220/50
700170/V
617373/22=V220/50
630012
613656
616308/22
612534
612776
611297
524973
613656

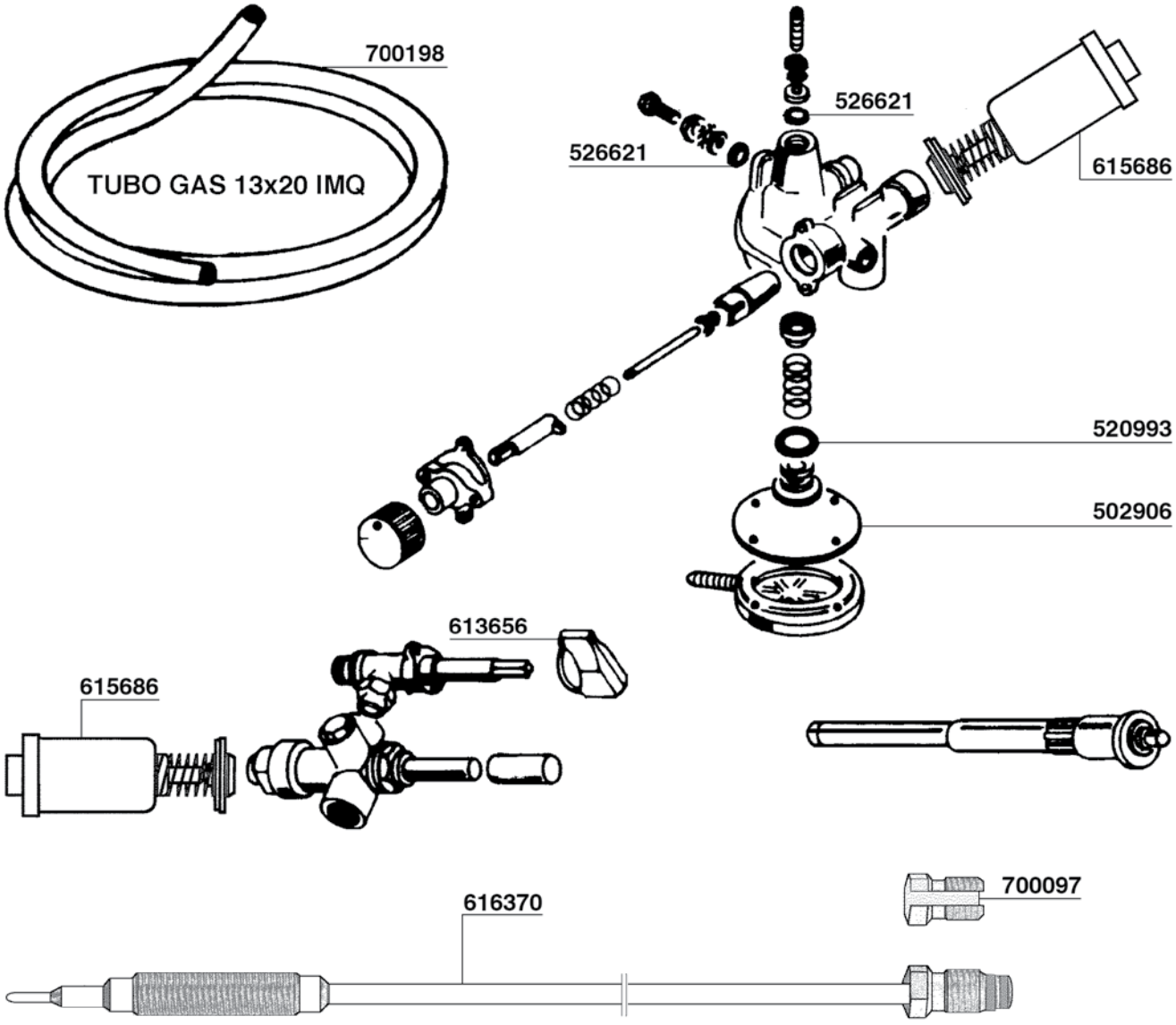
700198
TUBO GAS 13x20 IMQ
526621
526621
615686
520993
502906
613656
615686
616370
700097

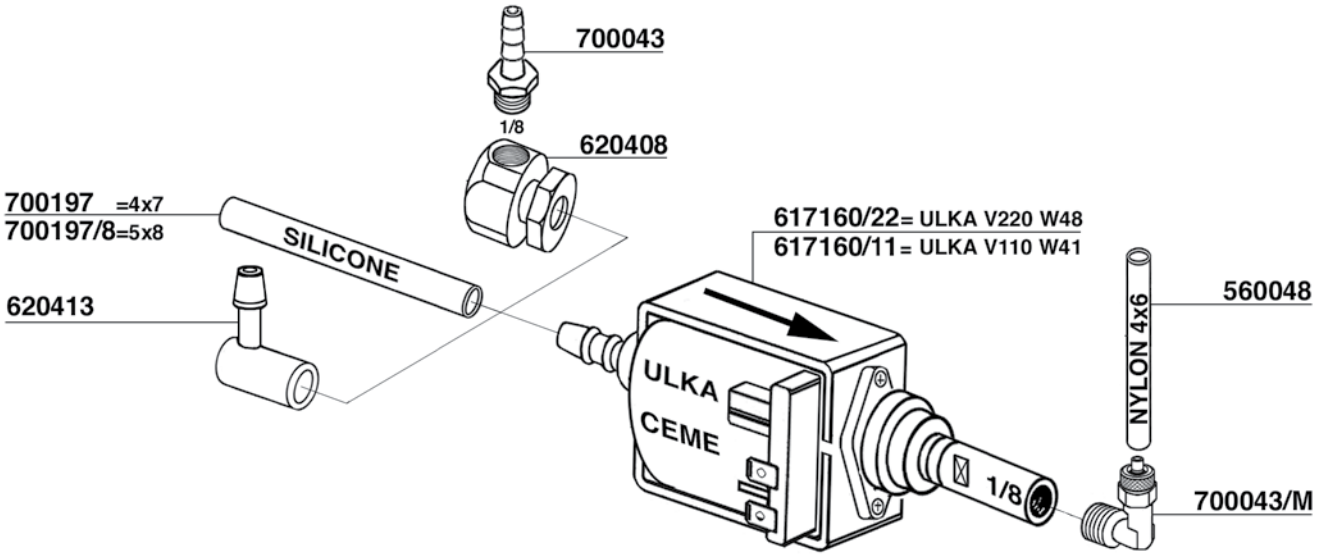
700043
1/8
620408
700197 =4x7
700197/8=5x8
SILICONE
620413
617160/22= ULKA V220 W48
617160/11= ULKA V110 W41
ULKA
CEME
1/8
NYLON 4x6
560048
700043/M

601624

542794

601636

529575

618970

618968

524554

700750

524554

700217

615624/A
certificato
certified

524555

LIVELLO

518825=12FORI E61
603302=16FORI ARIETE

603778
16FORI ARIETE

603300
16FORI ARIETE

603375
16FORI ARIETE

RESISTENZA

523913
12FORI E61

519205=12FORI E61
519205/T=12FORI E61 TEFLON

518824
12FORI E61

518826
12FORI E61

BOILER RAME E61
E61 COPPER BOILER

591201 =GR1
591202 =GR2
591203 =GR3

616597 CE/UL

700124
Ø55mm

MANOMETRI

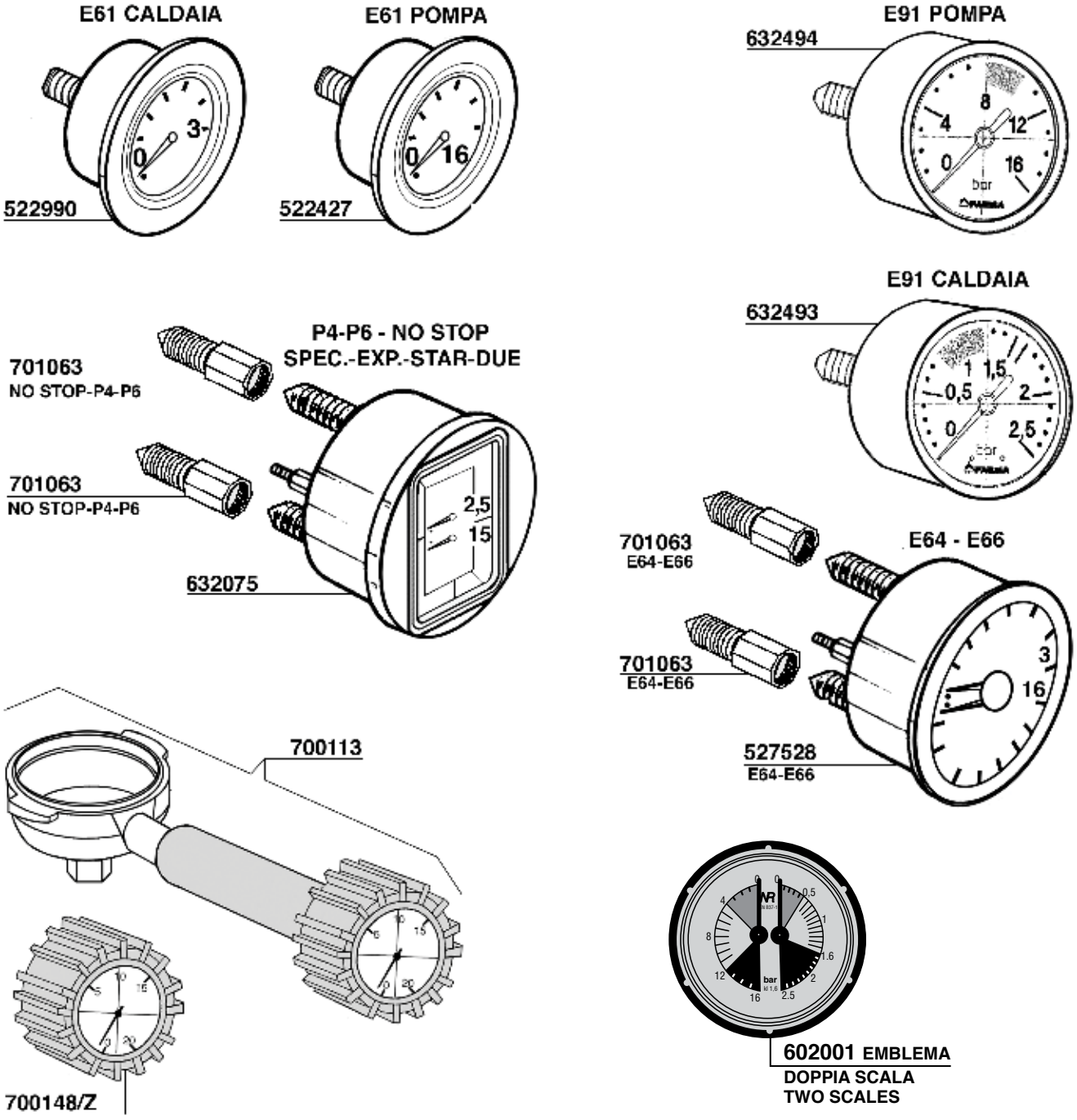
E61 CALDAIA
522990
E61 POMPA
522427
E91 POMPA
632494
E91 CALDAIA
632493
P4-P6 - NO STOP
SPEC.-EXP.-STAR-DUE
701063
NO STOP-P4-P6
701063
NO STOP-P4-P6
632075
701063
E64-E66
E64 - E66
701063
E64-E66
527528
E64-E66
700113
700148/Z
602001 EMBLEMA
DOPPIA SCALA
TWO SCALES

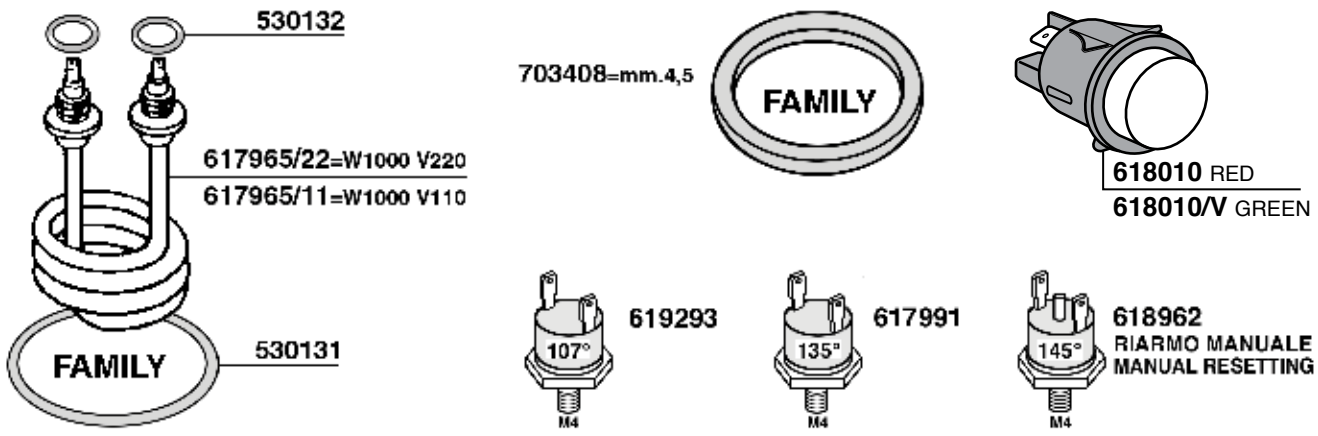
530132
617965/22=W1000 V220
617965/11=W1000 V110
FAMILY
530131
703408=mm.4,5
FAMILY
618010 RED
618010/V GREEN
107°
M4
619293
135°
M4
617991
145°
M4
618962
RIARMO MANUALE
MANUAL RESETTING

615346 NERO BLACK

310 mm

310 mm

611647 BIANCO WHITE

516264/P

PLASTIC

516264

INOX

700614

620438

Ø 57

ALUMINIUM

620867

Ø 57

INOX-LEGNO
WOOD-STAINLESS STEEL

PLASTIC

513744

GOMMA NERA-BLACK RUBBER

M10

634469

40 mm

Ø 40

M10

632404

Ø 40

52 mm

Ø10x13

615132

15 mm

Ø 40

618377

30 mm

Ø 50

M10

615417

33 mm

Ø 40

617622

10 mm

Ø 50

PLASTICA NERA-BLACK PLASTIC

M10

620414

Ø 60

40 mm

M10

620415

Ø 60

60 mm

M10

620417

Ø 60

130 mm

M10

620416

Ø 60

80 mm

M10

620416/R

REGOLABILE
ADJUSTABLE

Ø 60

80 ÷ 100mm

M10

620417/R

REGOLABILE
ADJUSTABLE

Ø 60

130 ÷ 150mm

RESISTENZE

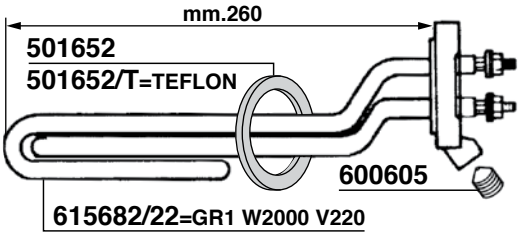
mm.260
501652
501652/T=TEFLON
600605
615682/22=GR1 W2000 V220

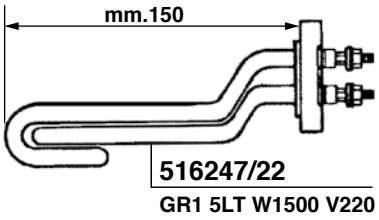
mm.150
516247/22
GR1 5LT W1500 V220

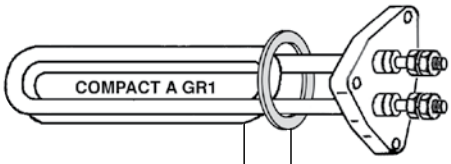
COMPACT A GR1
618963/22=1500W 220 V
618963/11=1300W 110 V
400826/T

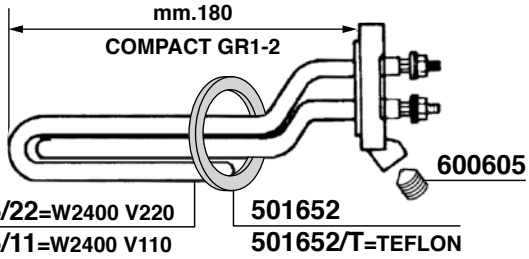
mm.180
COMPACT GR1-2
600605
616635/22=W2400 V220
616635/11=W2400 V110
501652
501652/T=TEFLON

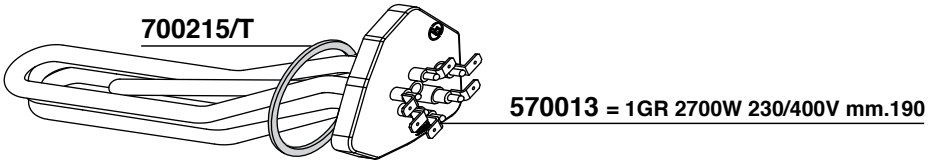
700215/T
570013 = 1GR 2700W 230/400V mm.190

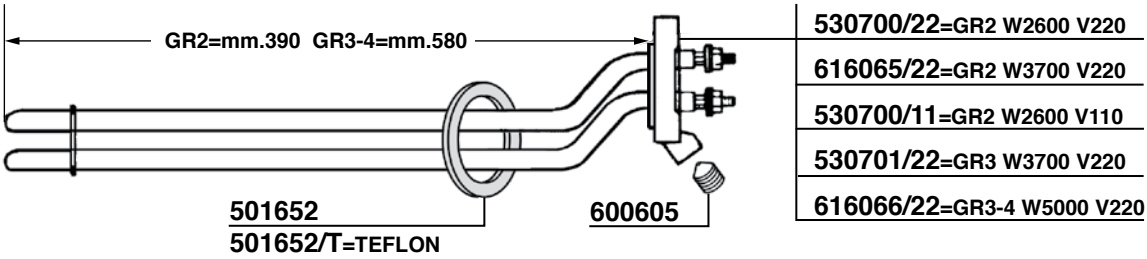
GR2=mm.390 GR3-4=mm.580
530700/22=GR2 W2600 V220
616065/22=GR2 W3700 V220
530700/11=GR2 W2600 V110
530701/22=GR3 W3700 V220
616066/22=GR3-4 W5000 V220
501652
501652/T=TEFLON
600605

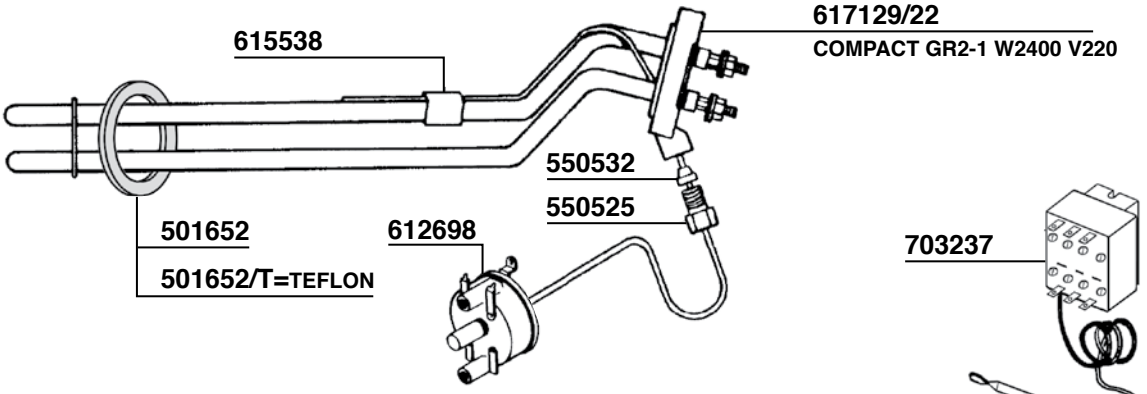
617129/22
COMPACT GR2-1 W2400 V220
615538
550532
550525
501652
501652/T=TEFLON
612698
703237

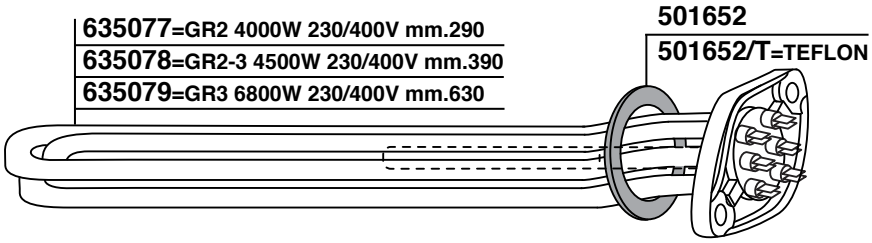
635077=GR2 4000W 230/400V mm.290
635078=GR2-3 4500W 230/400V mm.390
635079=GR3 6800W 230/400V mm.630
501652
501652/T=TEFLON

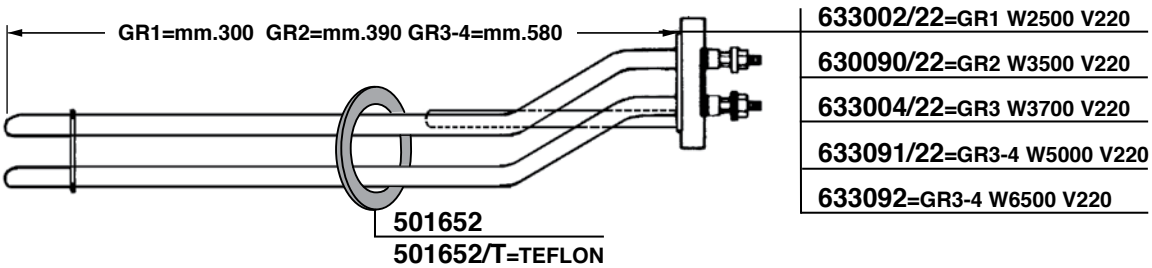
GR1=mm.300 GR2=mm.390 GR3-4=mm.580
633002/22=GR1 W2500 V220
630090/22=GR2 W3500 V220
633004/22=GR3 W3700 V220
633091/22=GR3-4 W5000 V220
633092=GR3-4 W6500 V220
501652
501652/T=TEFLON

ELETTROPOMPE

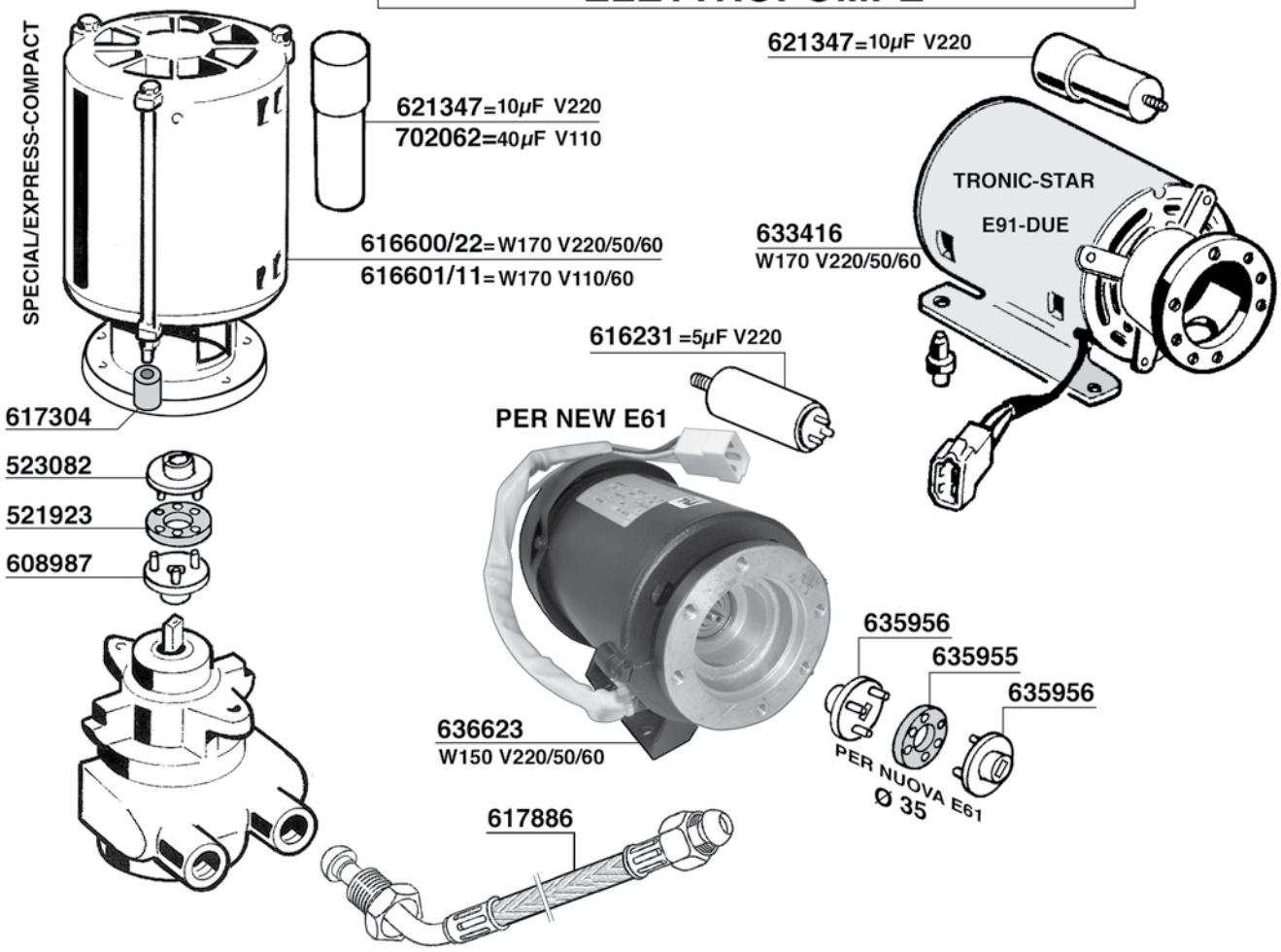

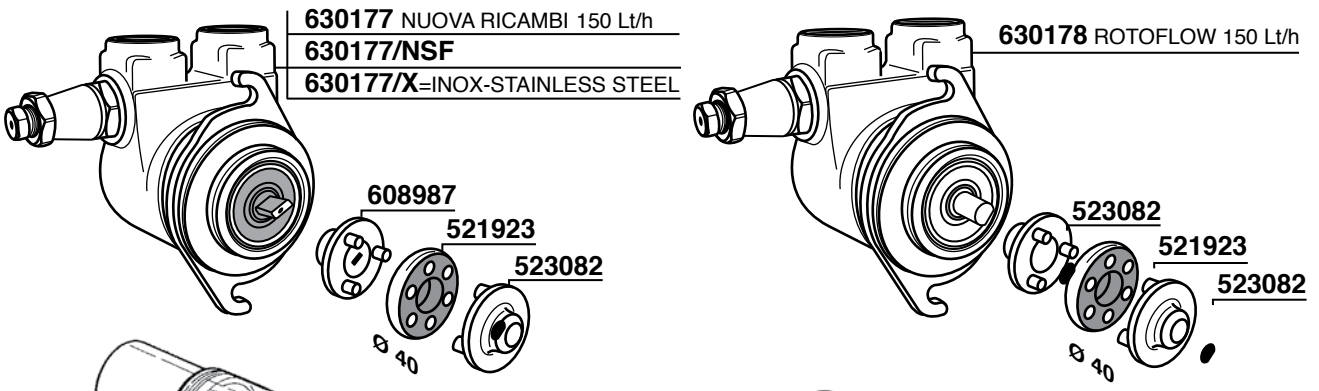

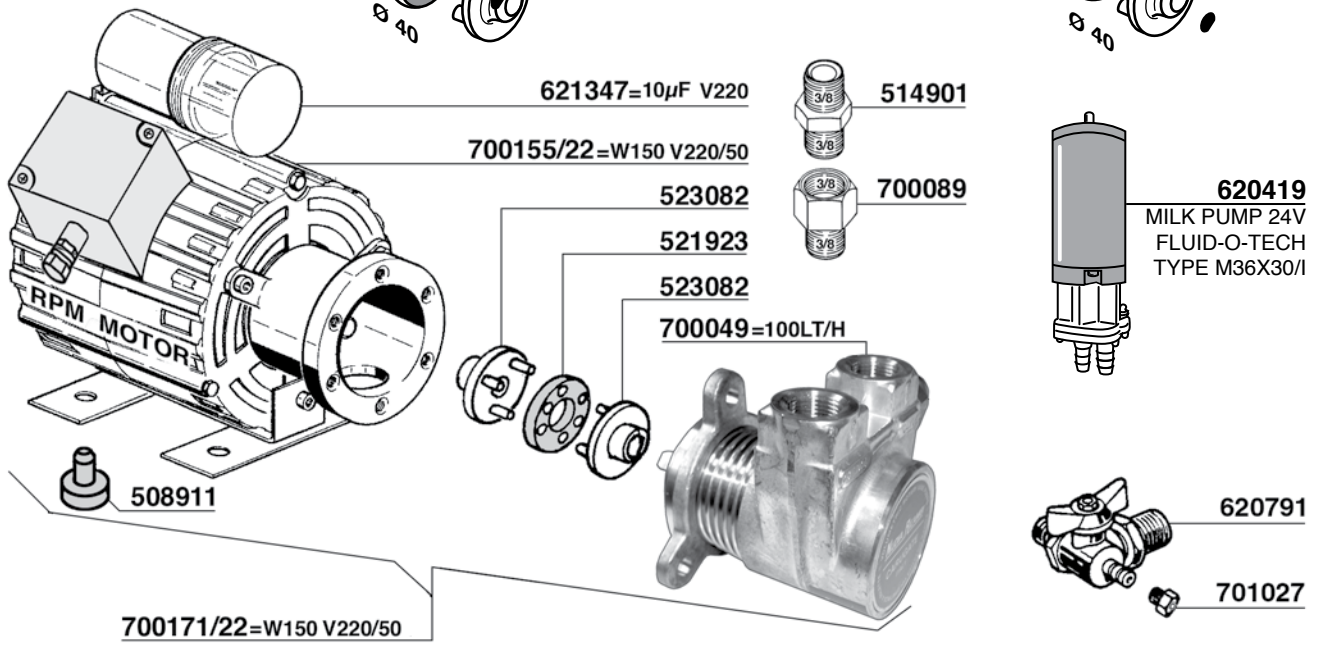

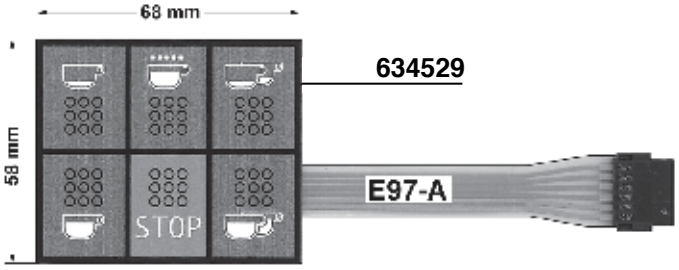

634529

632842

GRIGIO - GREY

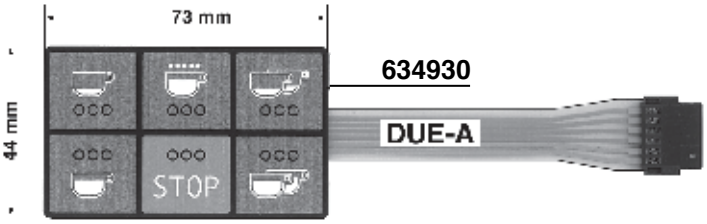

634930

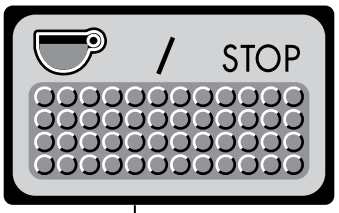

619002

DUE/SMART - S

634927

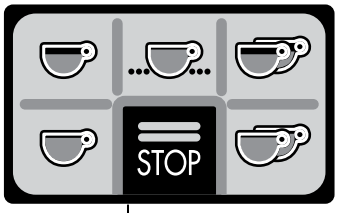

619003

DUE/SMART - A

591540

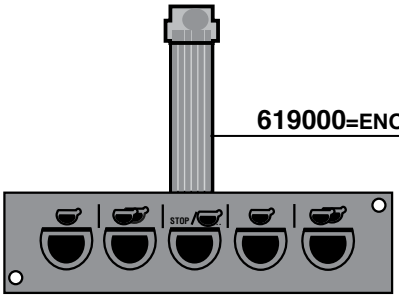

619000=ENOVA/A

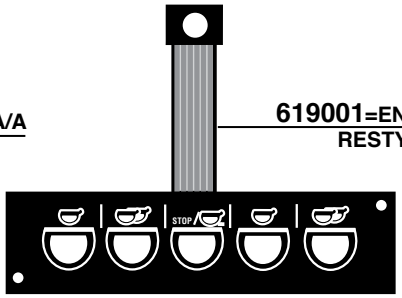

619001=ENOVA RESTYLING

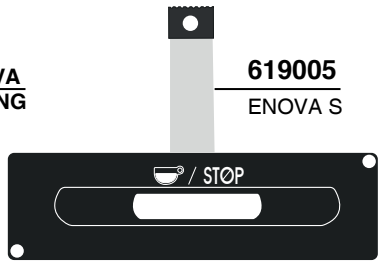

619005

ENOVA S

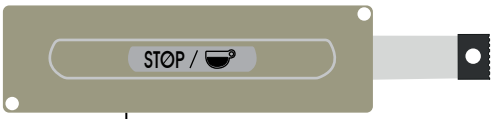

619006

E98 RE

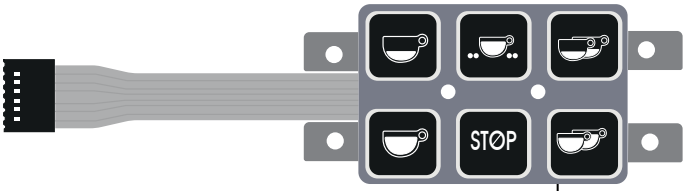

619007

SMART - R/A

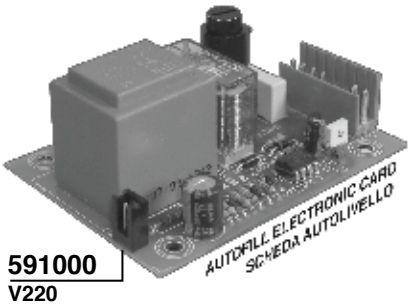

591000

V220

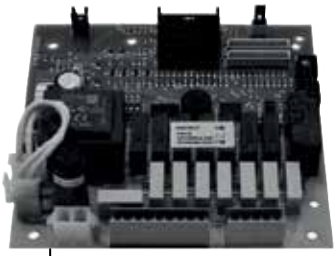

SCHEDA ELETTRONICA UNIFICATA
UNIFIED ELECTRONIC CARD

591549

DUE-DUE SMART-E61 JUBILE'
E91-E92 COMPACT-E97
STYLEMA - E98 PRESIDENT/A

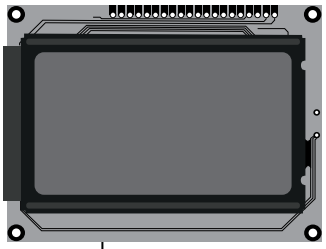

700608

M39 - M39GT

FC 31 MINERVA-TOSTAPANE EGI

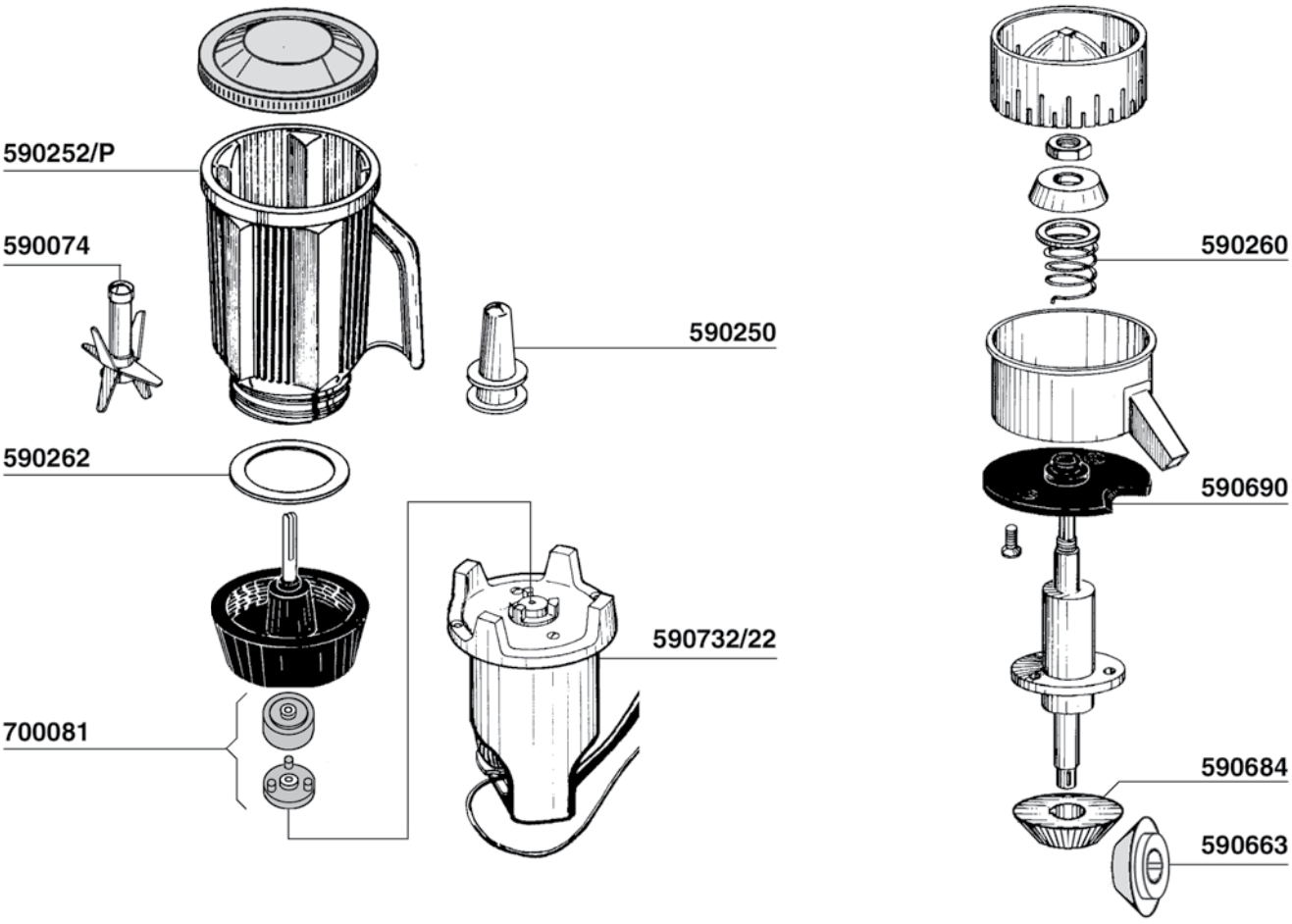

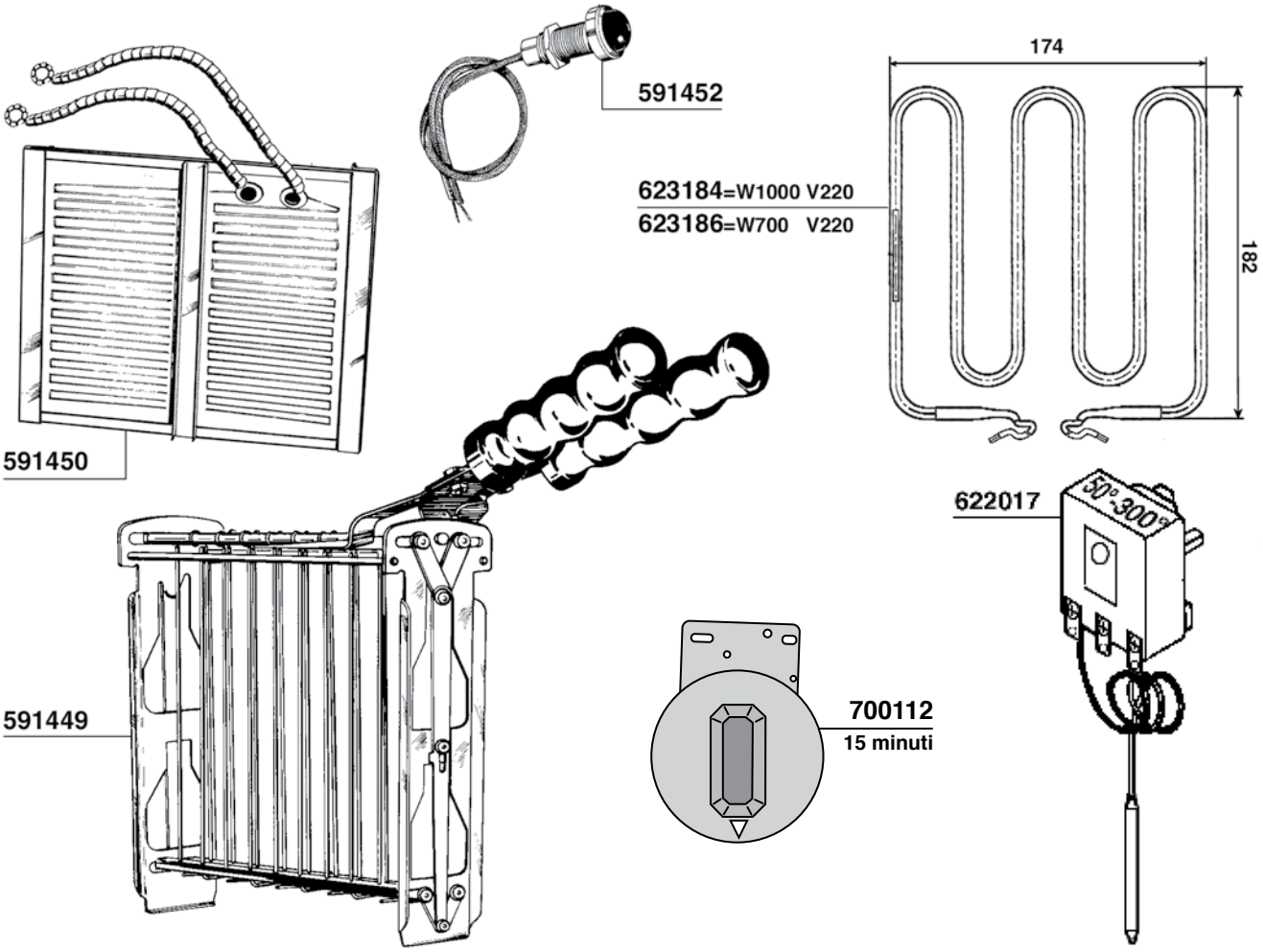

FIAMMA RST

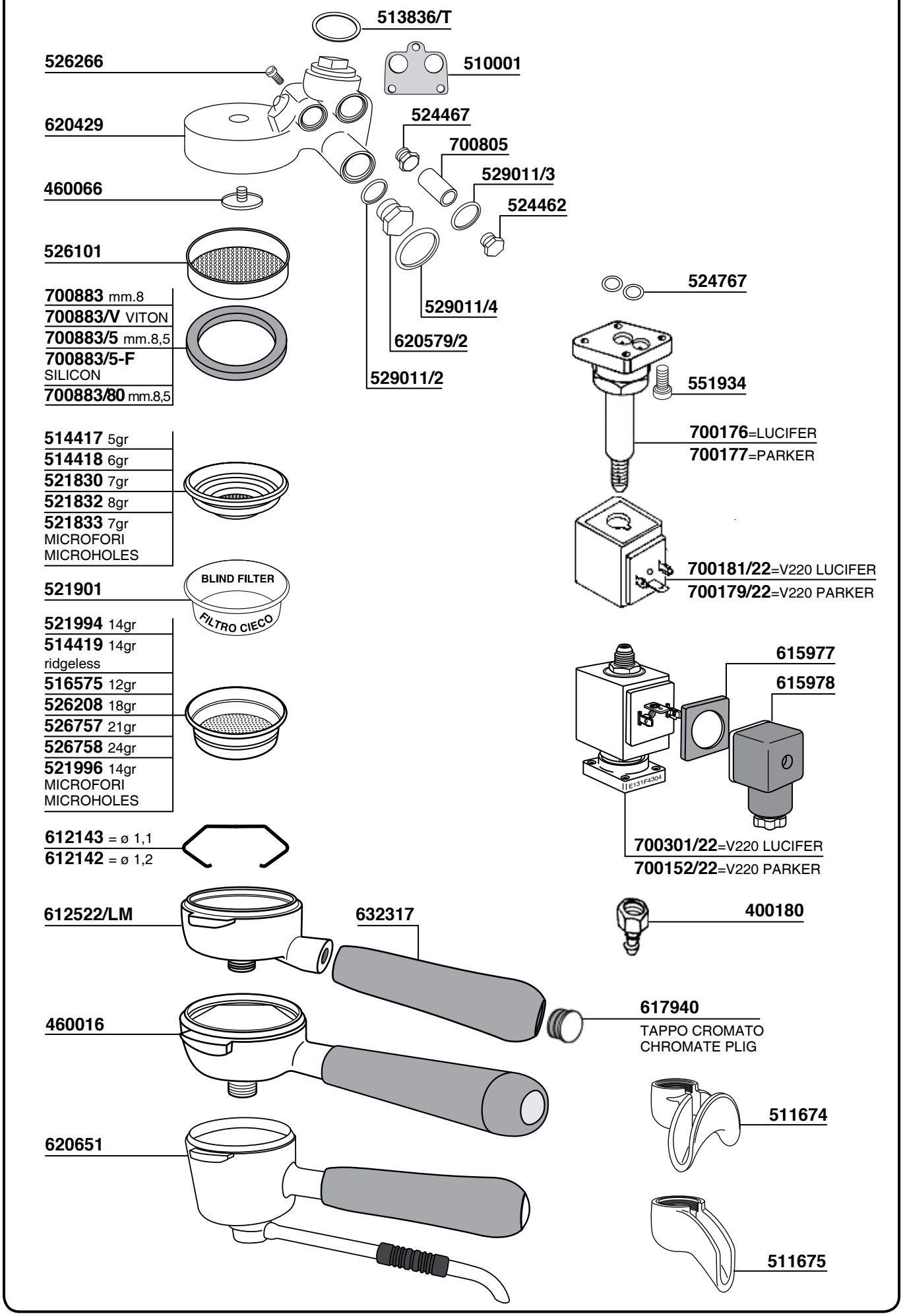
513836/T
526266
510001
620429
524467
700805
529011/3
460066
524462
526101
524767
700883 mm.8
700883/V VITON
700883/5 mm.8,5
700883/5-F SILICON
700883/80 mm.8,5
529011/4
620579/2
529011/2
551934
700176=LUCIFER
700177=PARKER
514417 5gr
514418 6gr
521830 7gr
521832 8gr
521833 7gr MICROFORI MICROHOLES
700181/22=V220 LUCIFER
700179/22=V220 PARKER
521901
BLIND FILTER
FILTRO CIECO
521994 14gr
514419 14gr ridgeless
516575 12gr
526208 18gr
526757 21gr
526758 24gr
521996 14gr MICROFORI MICROHOLES
615977
615978
E131F4304
700301/22=V220 LUCIFER
700152/22=V220 PARKER
612143 = ø 1,1
612142 = ø 1,2
612522/LM
632317
400180
617940
TAPPO CROMATO
CHROMATE PLIG
460016
511674
620651
511675

FIAMMA RST

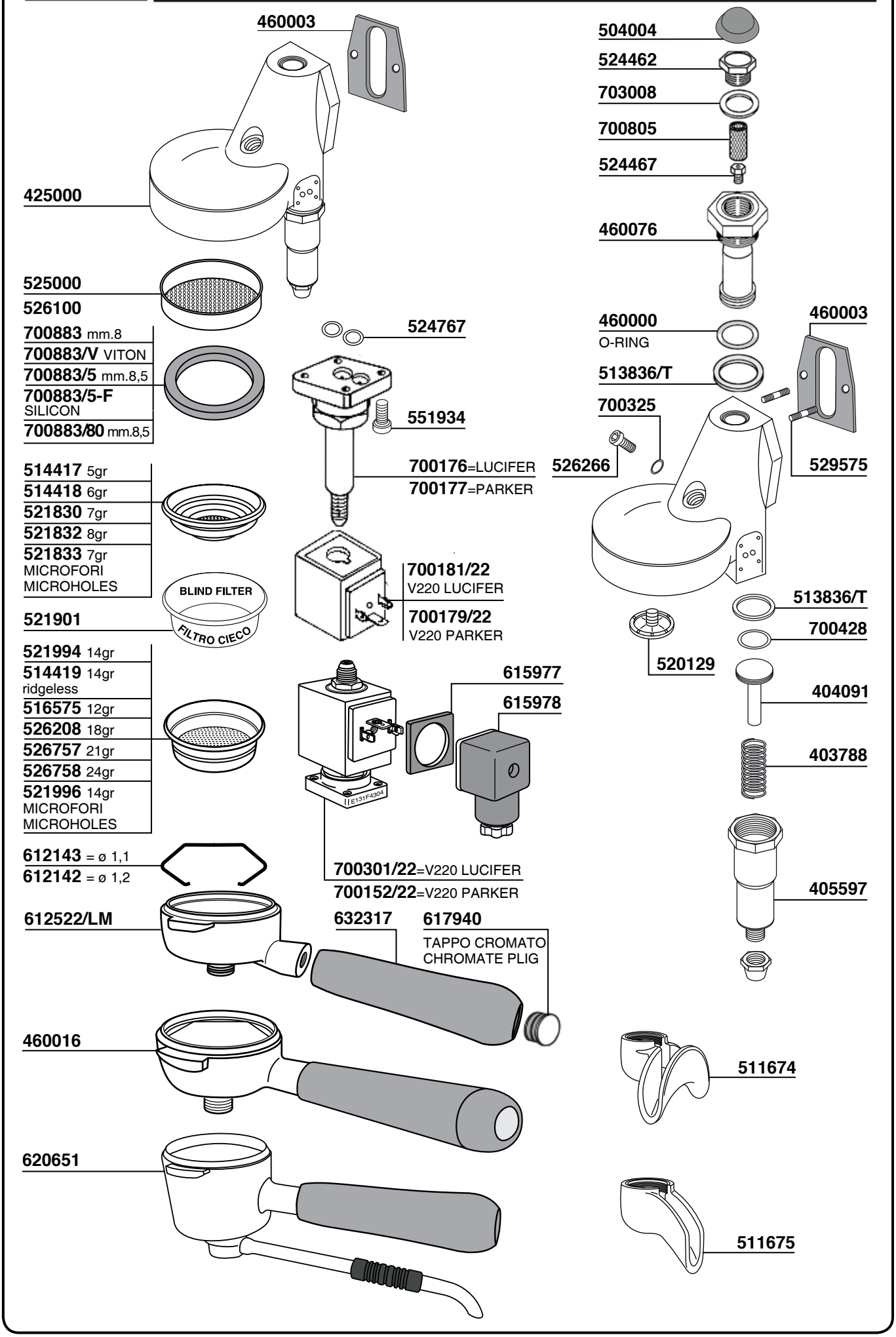
460003
425000
525000
526100
700883 mm.8
700883/V VITON
700883/5 mm.8,5
700883/5-F SILICON
700883/80 mm.8,5
514417 5gr
514418 6gr
521830 7gr
521832 8gr
521833 7gr MICROFORI MICROHOLES
BLIND FILTER
FILTRO CIECO
521901
521994 14gr
514419 14gr ridgeless
516575 12gr
526208 18gr
526757 21gr
526758 24gr
521996 14gr MICROFORI MICROHOLES
612143 = ø 1,1
612142 = ø 1,2
612522/LM
524767
551934
700176=LUCIFER
700177=PARKER
700181/22 V220 LUCIFER
700179/22 V220 PARKER
615977
615978
700301/22=V220 LUCIFER
700152/22=V220 PARKER
632317
617940
TAPPO CROMATO CHROMATE PLIG
460016
620651
504004
524462
703008
700805
524467
460076
460000 O-RING
513836/T
700325
526266
460003
529575
513836/T
700428
520129
404091
403788
405597
511674
511675

FIAMMA RST

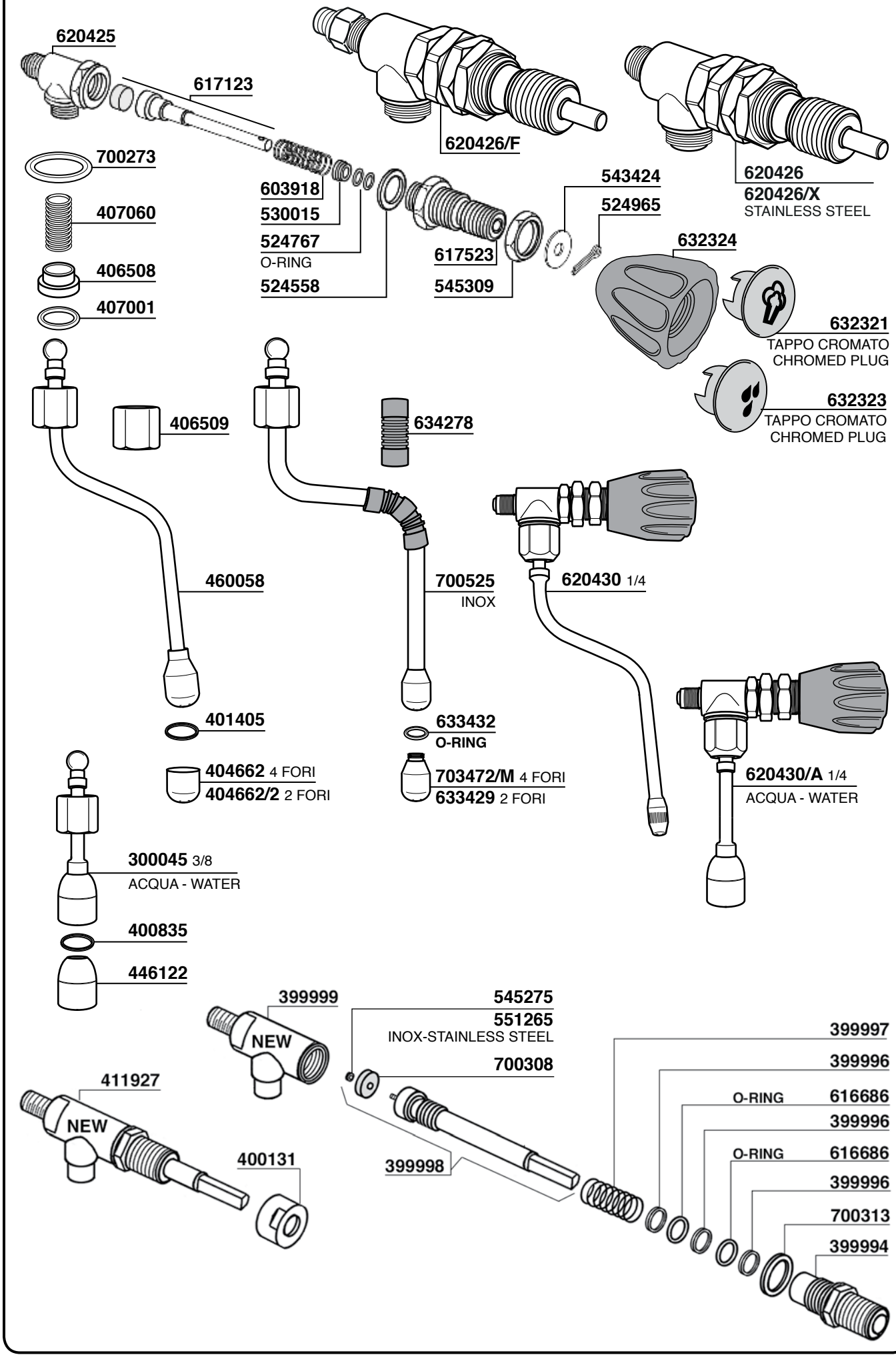
620425
617123
620426/F
620426
620426/X
STAINLESS STEEL
700273
407060
406508
407001
603918
530015
524767
O-RING
524558
617523
545309
543424
524965
632324
632321
TAPPO CROMATO
CHROMED PLUG
632323
TAPPO CROMATO
CHROMED PLUG
406509
634278
460058
700525
INOX
620430 1/4
401405
633432
O-RING
404662 4 FORI
404662/2 2 FORI
703472/M 4 FORI
633429 2 FORI
620430/A 1/4
ACQUA - WATER
300045 3/8
ACQUA - WATER
400835
446122
399999
NEW
545275
551265
INOX-STAINLESS STEEL
700308
411927
NEW
400131
399998
399997
399996
O-RING
616686
399996
O-RING
616686
399996
700313
399994

FIAMMA RST

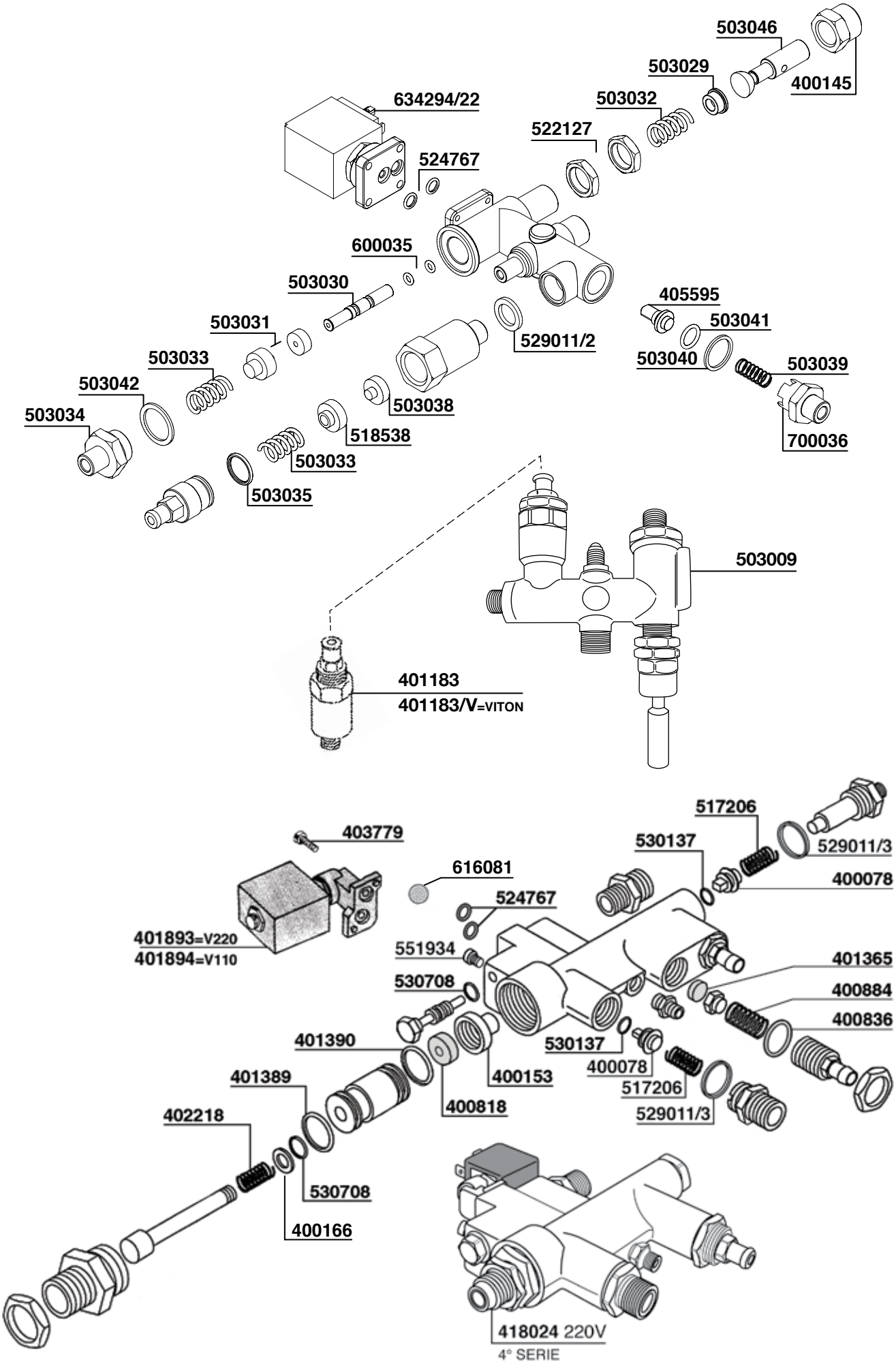
503046
503029
400145
634294/22
503032
522127
524767
600035
503030
405595
503041
503031
529011/2
503033
503040
503039
503042
503038
503034
518538
700036
503033
503035
503009
401183
401183/V=VITON
517206
403779
530137
529011/3
616081
400078
524767
401893=V220
401894=V110
551934
401365
530708
400884
400836
401390
530137
400078
400153
517206
401389
400818
529011/3
402218
530708
400166
418024 220V
4° SERIE

FIAMMA RST

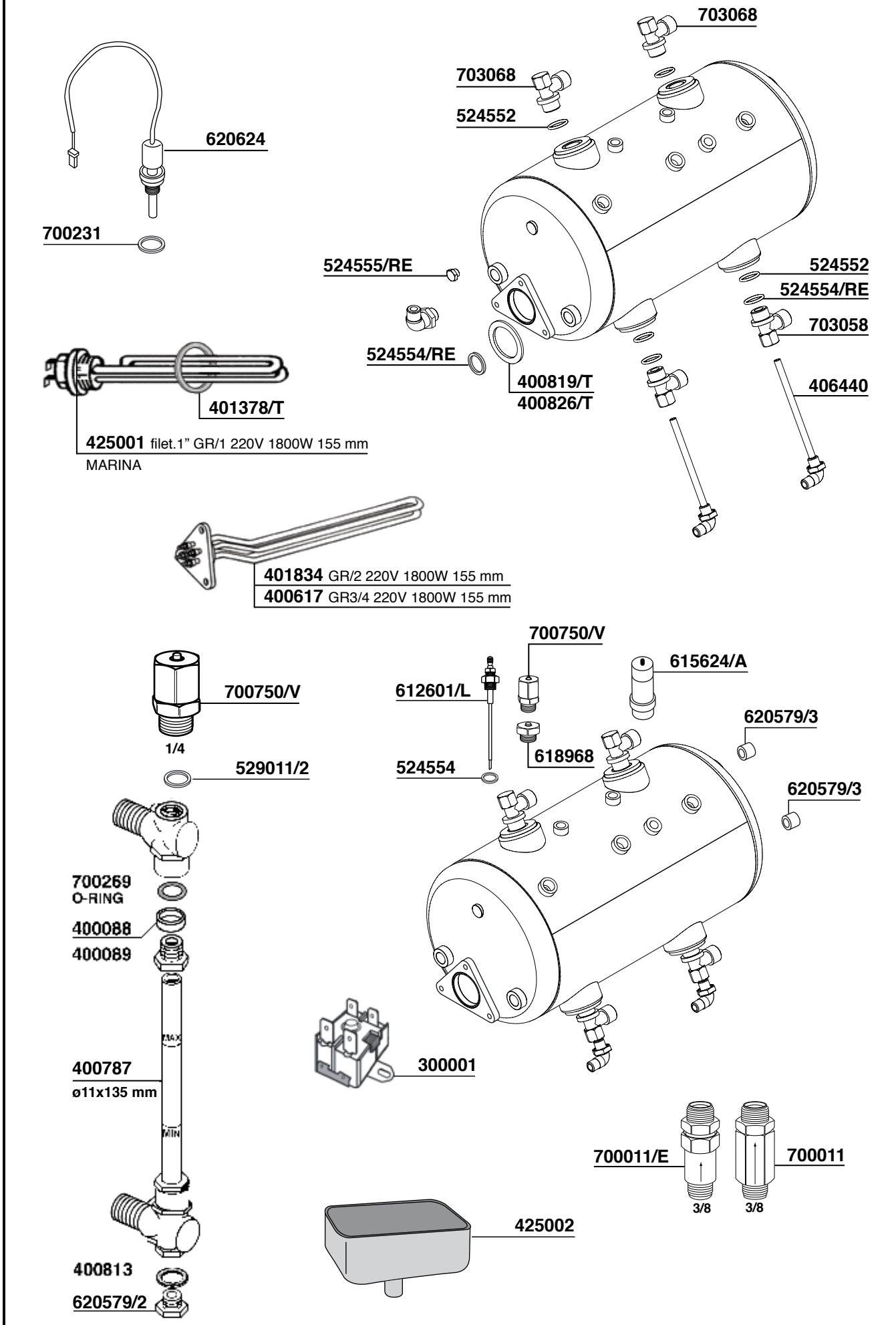
703068
703068
524552
620624
700231
524555/RE
524552
524554/RE
703058
524554/RE
400819/T
400826/T
406440
401378/T
425001 filet.1" GR/1 220V 1800W 155 mm
MARINA
401834 GR/2 220V 1800W 155 mm
400617 GR3/4 220V 1800W 155 mm
700750/V
615624/A
700750/V
612601/L
620579/3
1/4
618968
529011/2
524554
620579/3
700269
O-RING
400088
400089
MAX
400787
ø11x135 mm
MIN
300001
700011/E
700011
3/8
3/8
425002
400813
620579/2

621347
CAPACITOR
CONDENSAT.
10 µF

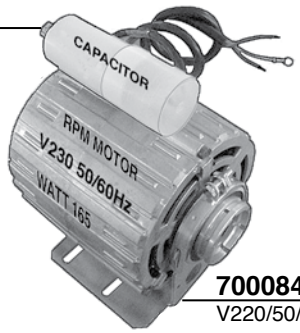

700084/22
V220/50/60 W165

700086/22 = V220/50/60 W150
621112 = 6,3 µF 220V

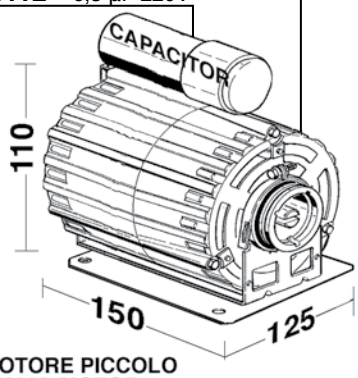

MOTORE PICCOLO
SMALL MOTOR

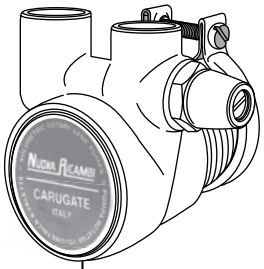

700048
100 Lt/h

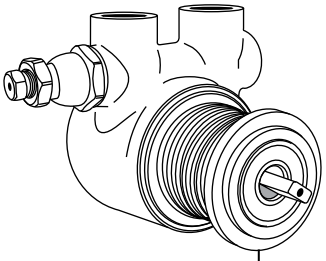

620406
ROTOFLOW 150 Lt/h
620406/X INOX

700042

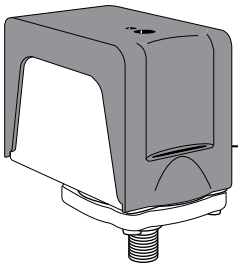

616597

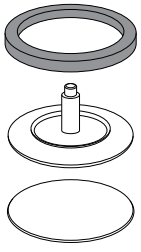

700124

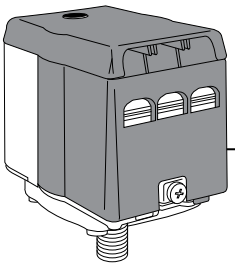

616592

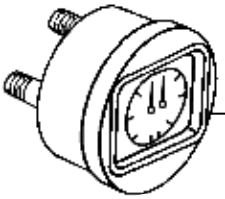

400737
BAR-CENTURY

BOILER

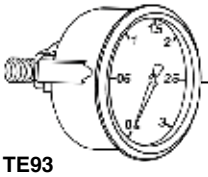

700594/T
Ø40mm.

TE93

POMPA

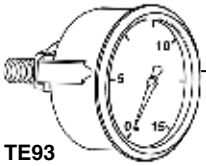

700595/T
Ø40mm.

TE93

FIAMMA RST

620405/C

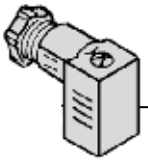

615978/T

615979

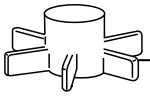

617903/G

530143

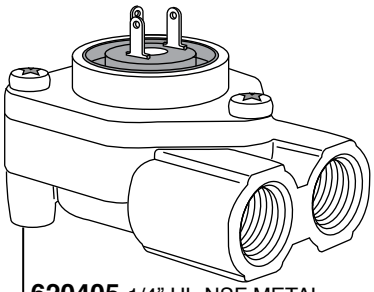

620405 1/4" UL-NSF METAL
620404 1/8" UL-NSF METAL

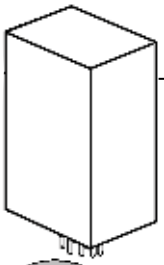

401871 F8 220V

607267 = F8

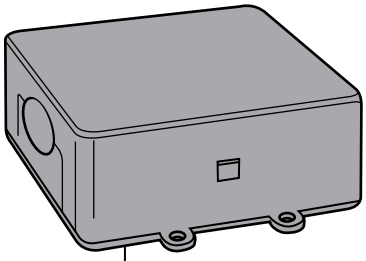

425003
GICAR CODE 9.5.32.37 G00
425004
GICAR CODE 9.5.33.13 E

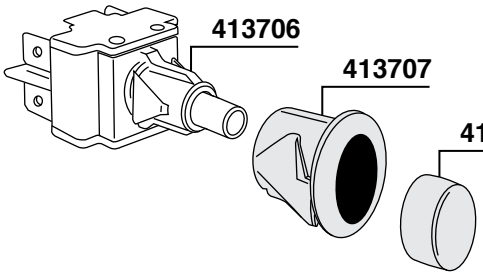

413706
413707
413708

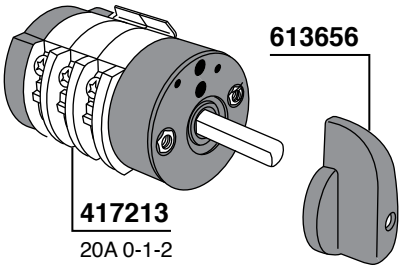

613656
417213
20A 0-1-2

404992=20A

ARANCIO
ORANGE

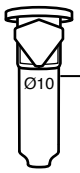

402627
COVER

VERDE
GREEN

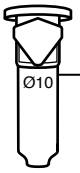

402628
COVER

VERDE
GREEN

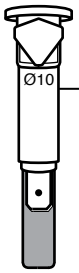

617732 220V

ROSSO
RED

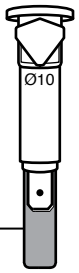

617730 220V

FIAMMA RST

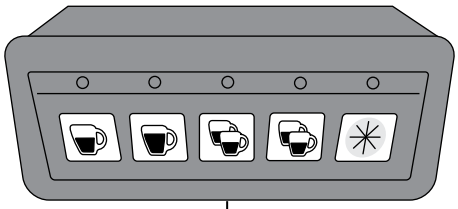

301000

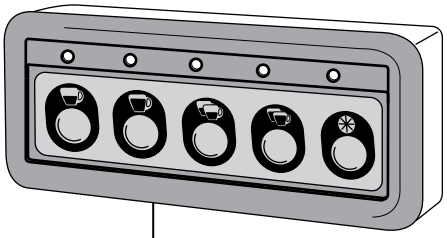

620736 16 PIN

GICAR CODE 9.9.08.83G

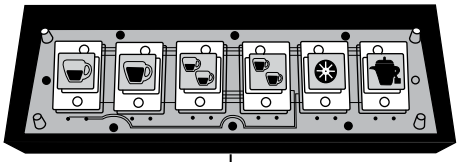

425007

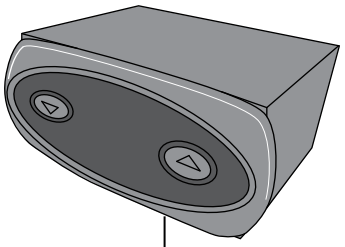

425006

9.3.00.50.G11

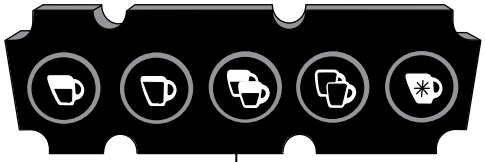

425005

GICAR CODE 9.9.14.95.G

425008

9.9.14.04.G

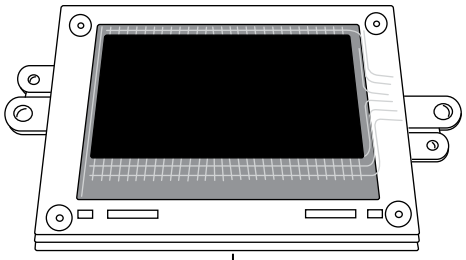

425009

8.8.74.04.G

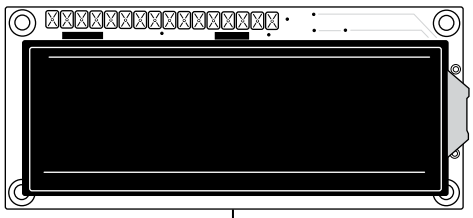

425010

9.5.13.70.G

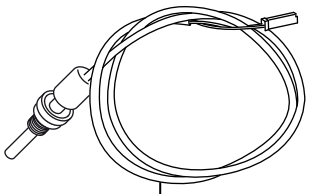

425011

FUTURMAT ARIETE

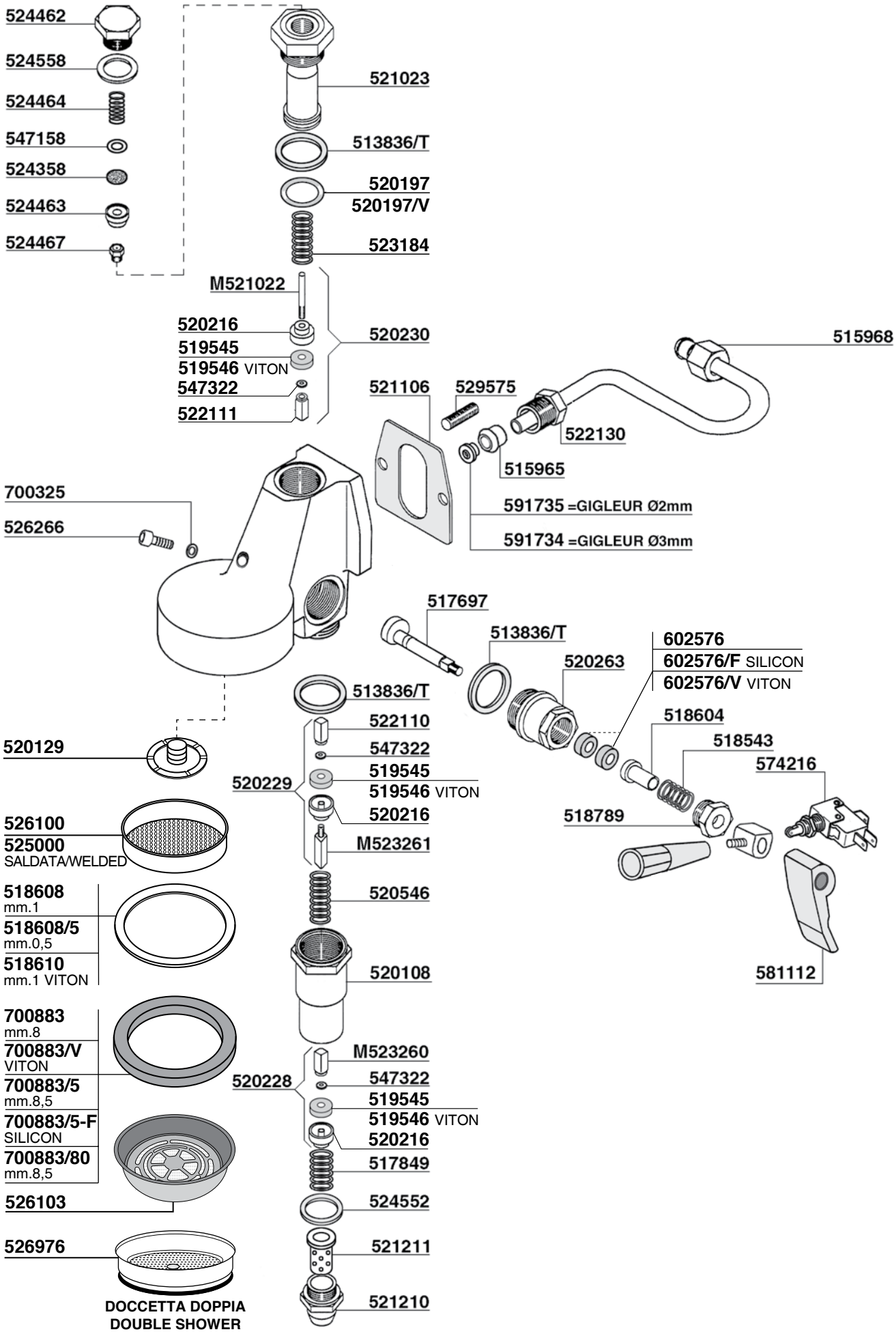

FUTURMAT ARIETE

Tav. 02

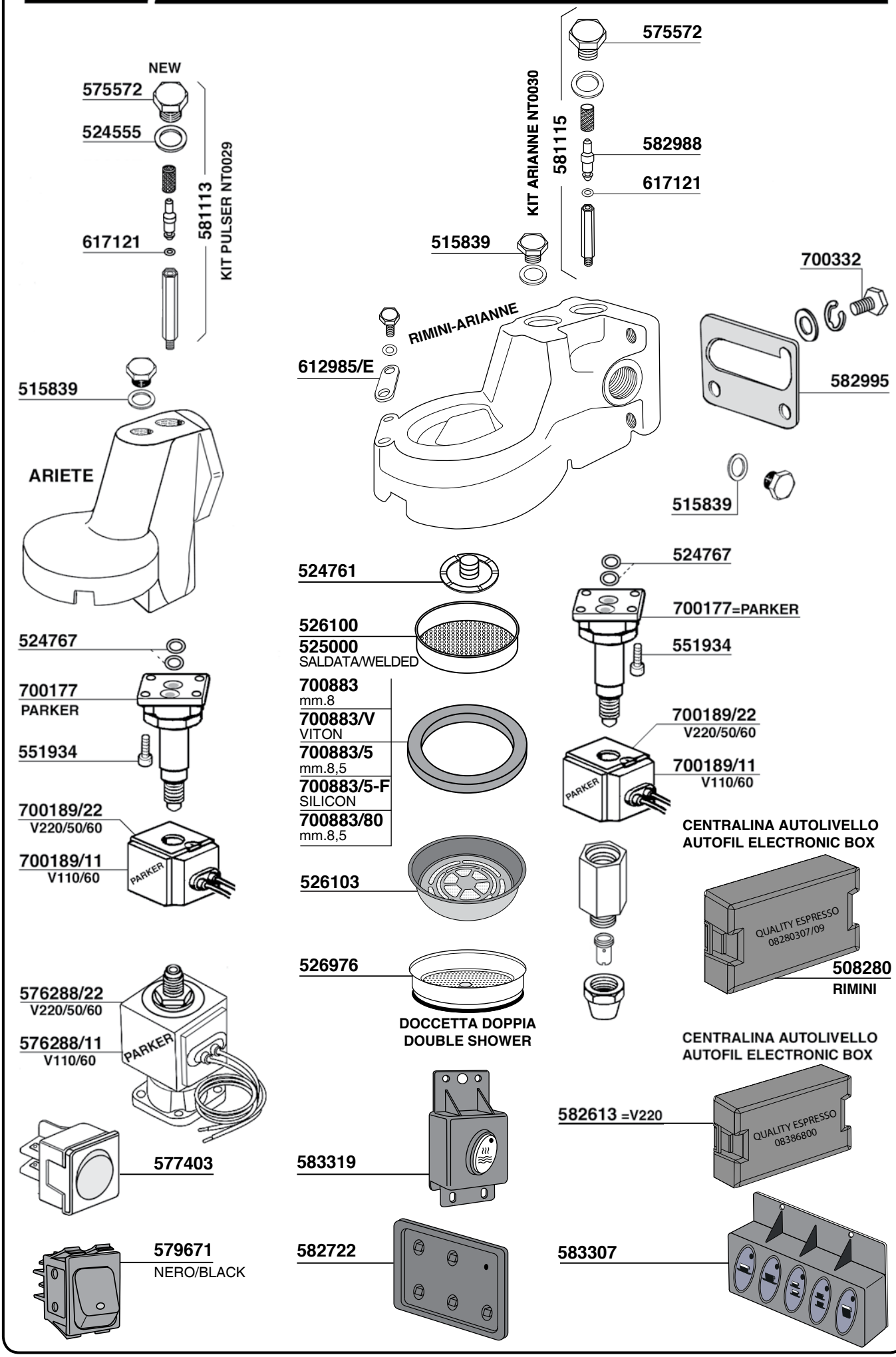

NUOVA RICAMBI FUTURMAT ARIETE Tav. 03

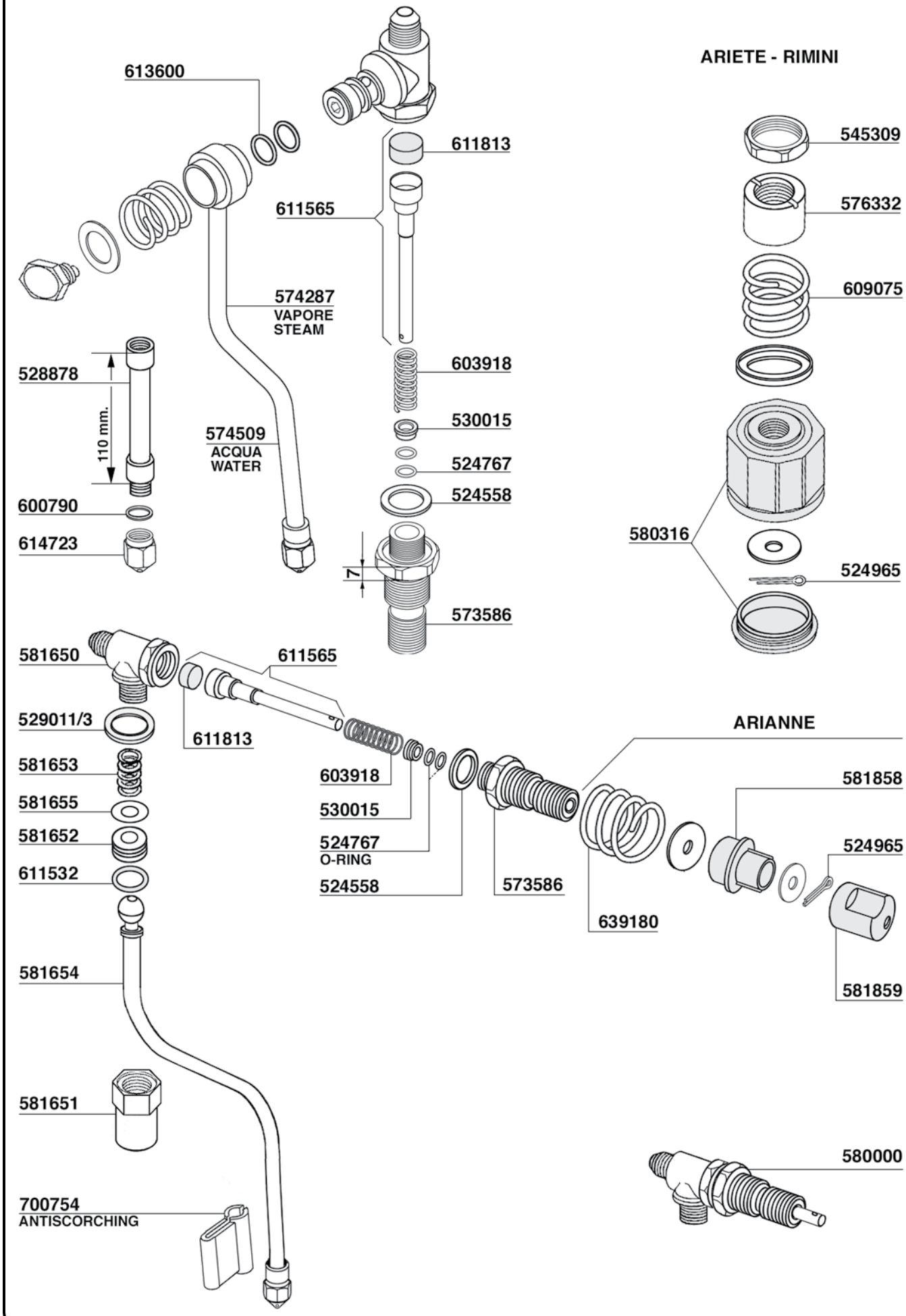

FUTURMAT ARIETE

Tav. 04

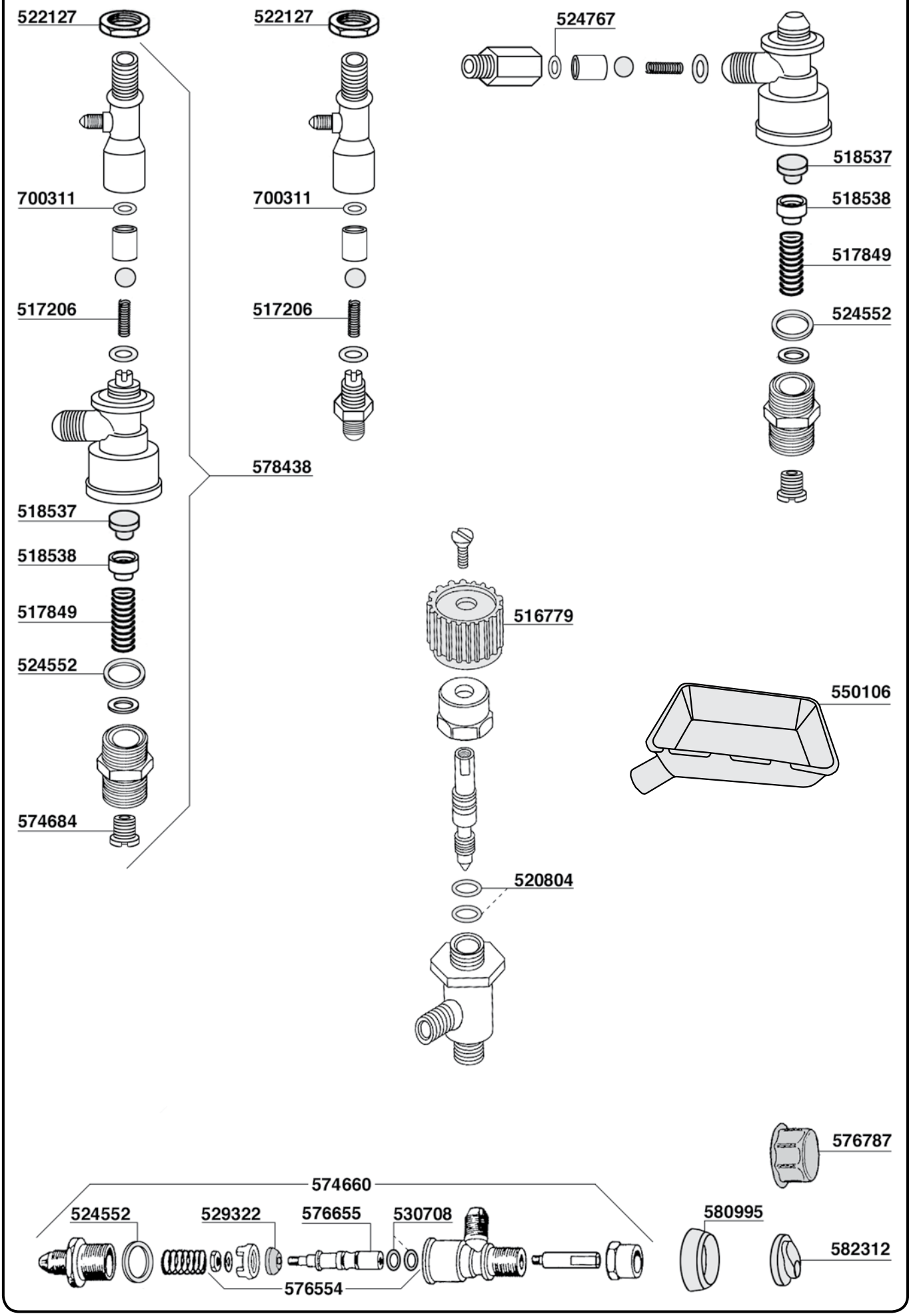

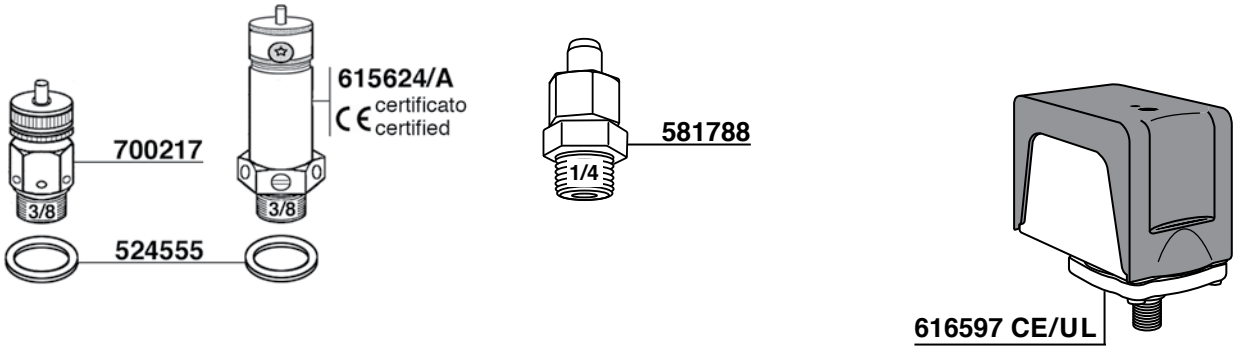
700217
3/8
615624/A
CE certificato certified
3/8
524555
581788
1/4
616597 CE/UL

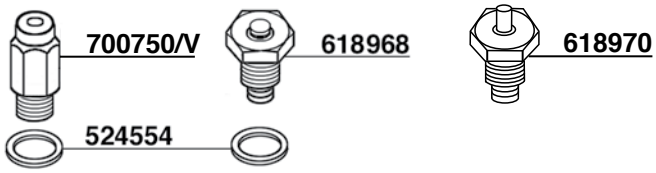
700750/V
618968
618970
524554

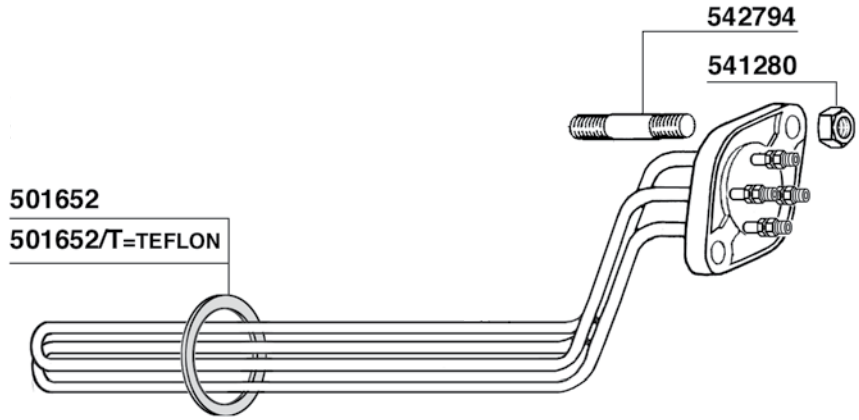
542794
541280
501652
501652/T=TEFLON

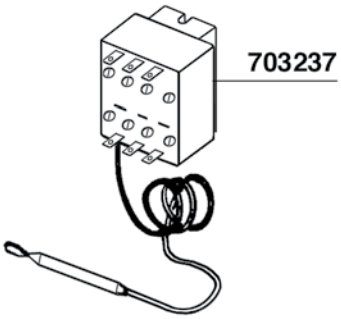
703237

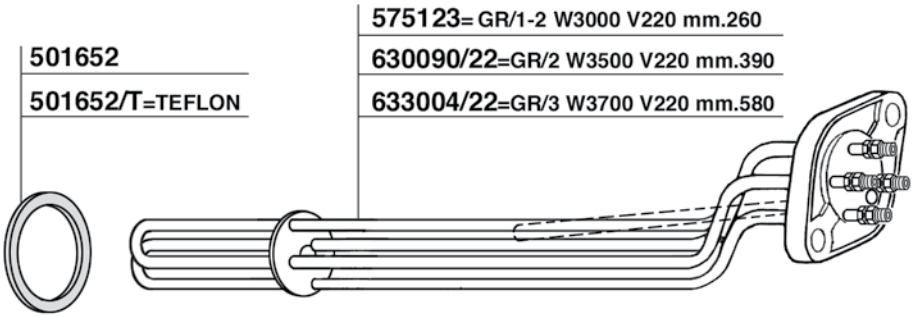
501652
501652/T=TEFLON
575123= GR/1-2 W3000 V220 mm.260
630090/22=GR/2 W3500 V220 mm.390
633004/22=GR/3 W3700 V220 mm.580

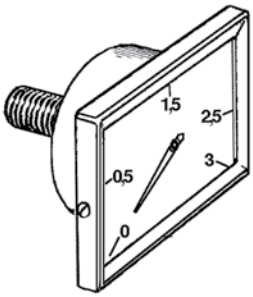
0
0,5
1,5
2,5
3

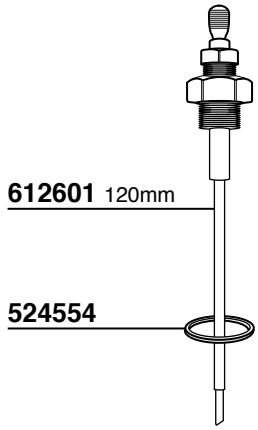
612601 120mm
524554

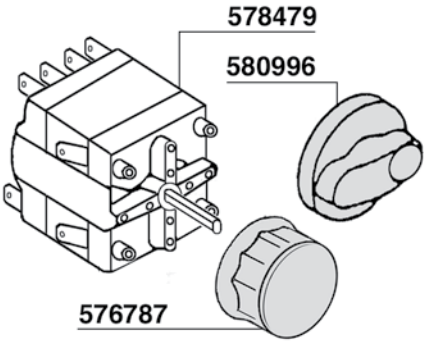
578479
580996
576787

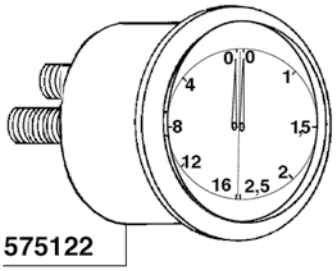
0
1
1,5
2
2,5
16
12
8
4
575122

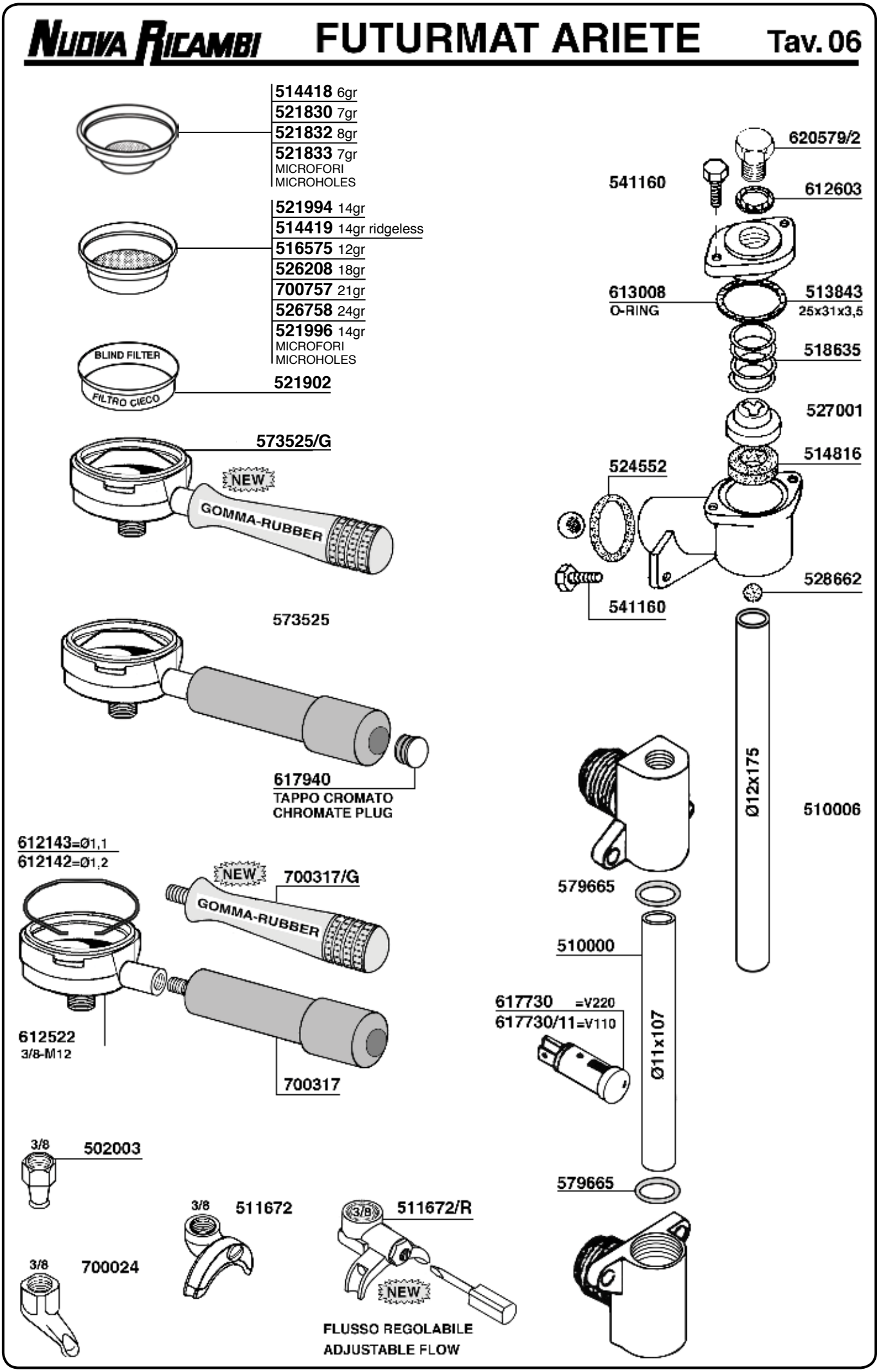
514418 6gr
521830 7gr
521832 8gr
521833 7gr
MICROFORI
MICROHOLES
521994 14gr
514419 14gr ridgeless
516575 12gr
526208 18gr
700757 21gr
526758 24gr
521996 14gr
MICROFORI
MICROHOLES
BLIND FILTER
FILTRO CIECO
521902
573525/G
NEW
GOMMA-RUBBER
573525
617940
TAPPO CROMATO
CHROMATE PLUG
612143=Ø1,1
612142=Ø1,2
NEW
700317/G
GOMMA-RUBBER
612522
3/8-M12
700317
3/8
502003
3/8
511672
3/8
700024
3/8
511672/R
NEW
FLUSSO REGOLABILE
ADJUSTABLE FLOW
620579/2
541160
612603
613008
O-RING
513843
25x31x3,5
518635
527001
514816
524552
528662
541160
Ø12x175
510006
579665
510000
617730 =V220
617730/11=V110
Ø11x107
579665

GAGGIA

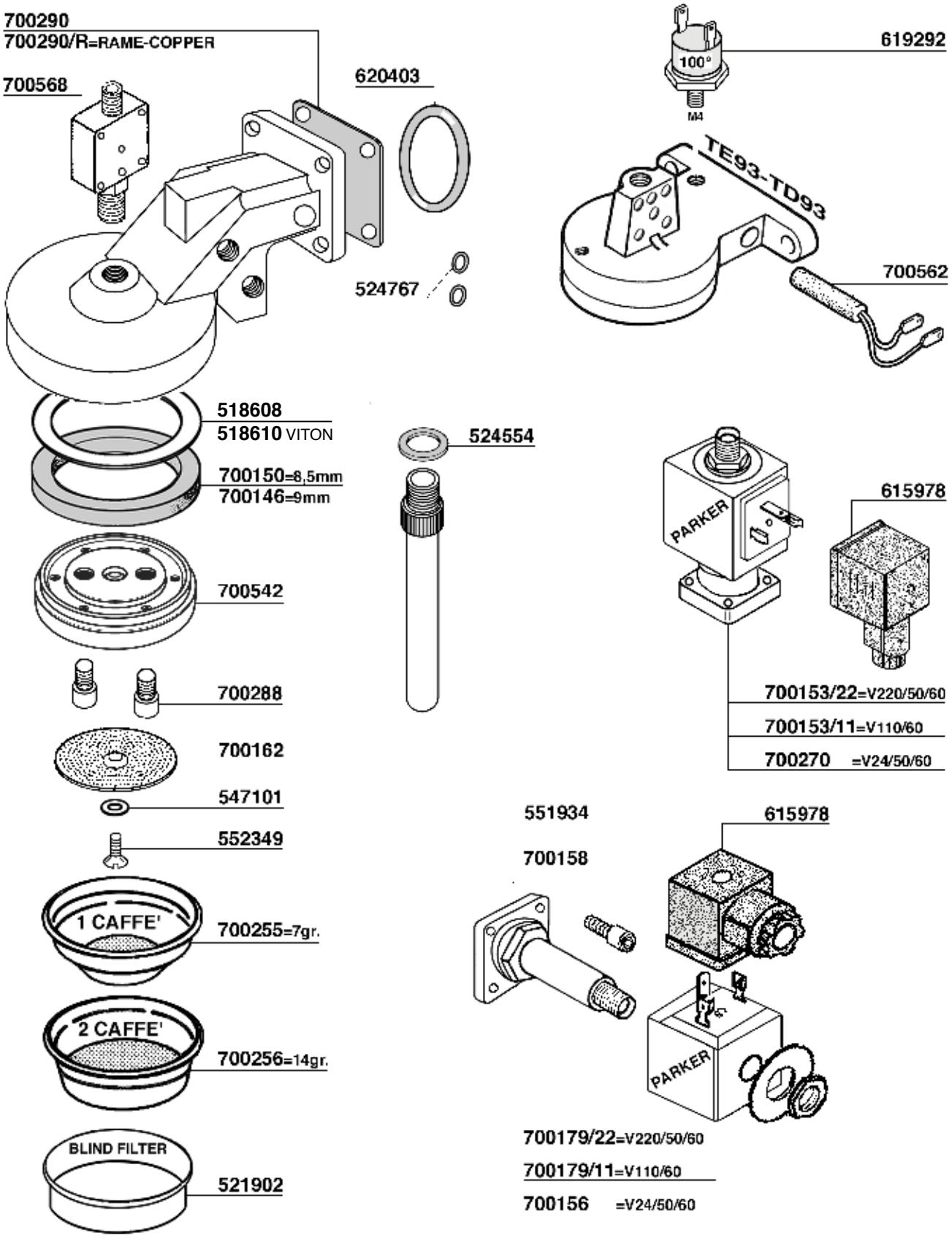

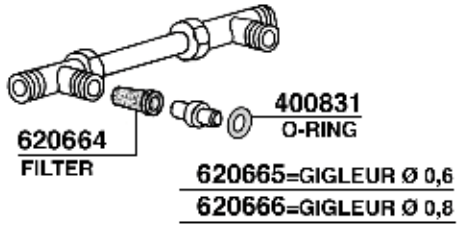

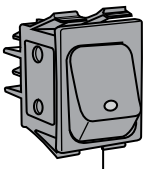

579671
NERO/ BLACK

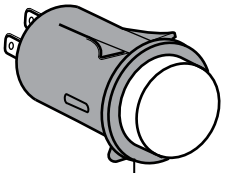

618010

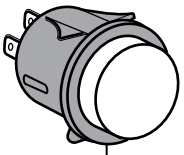

700247
SPIA ROSSA
RED PILOT LIGHT

GAGGIA

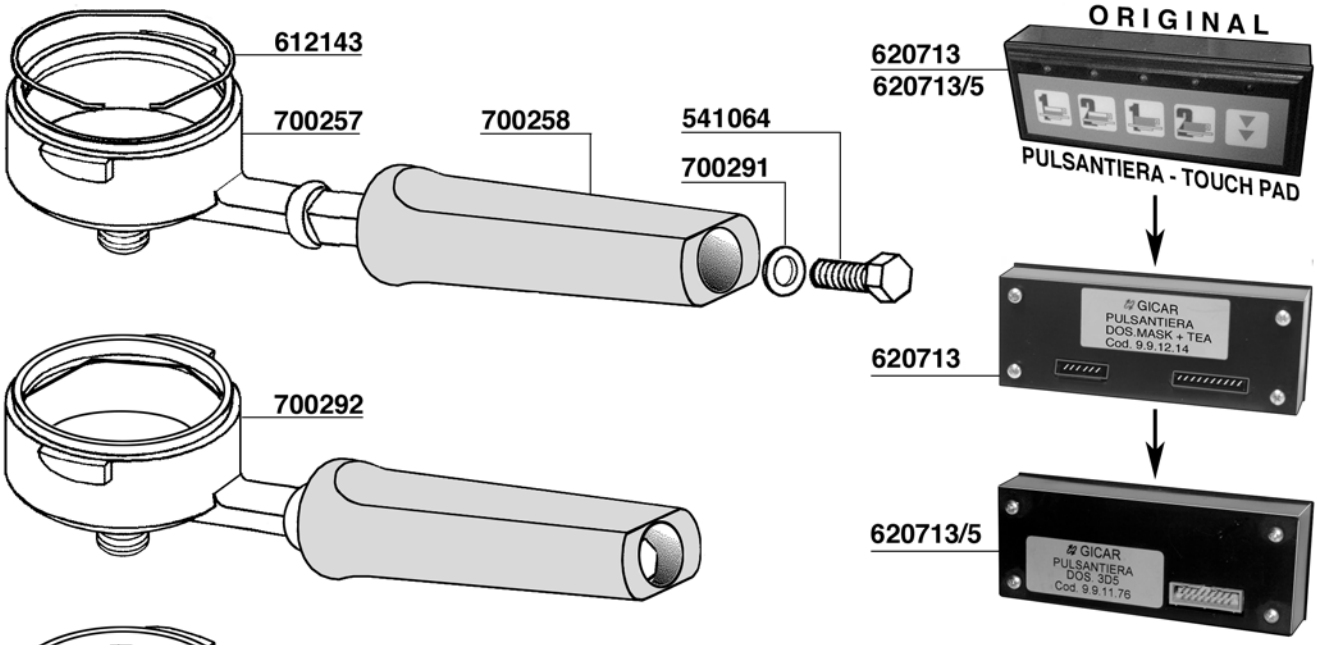

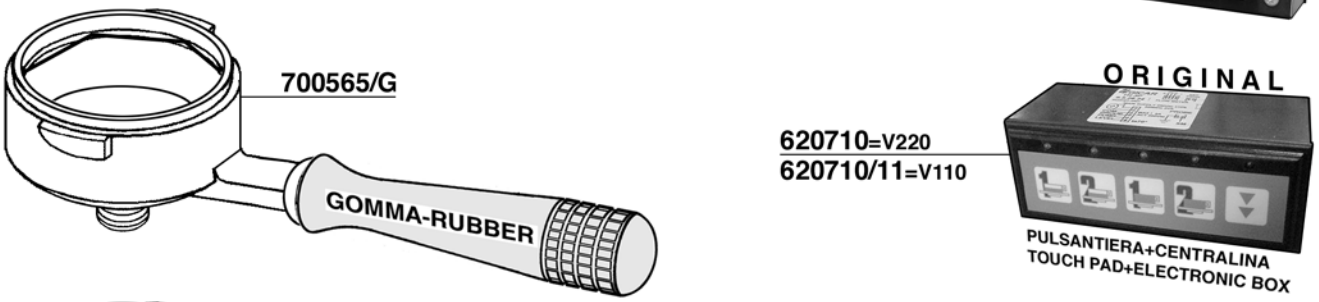

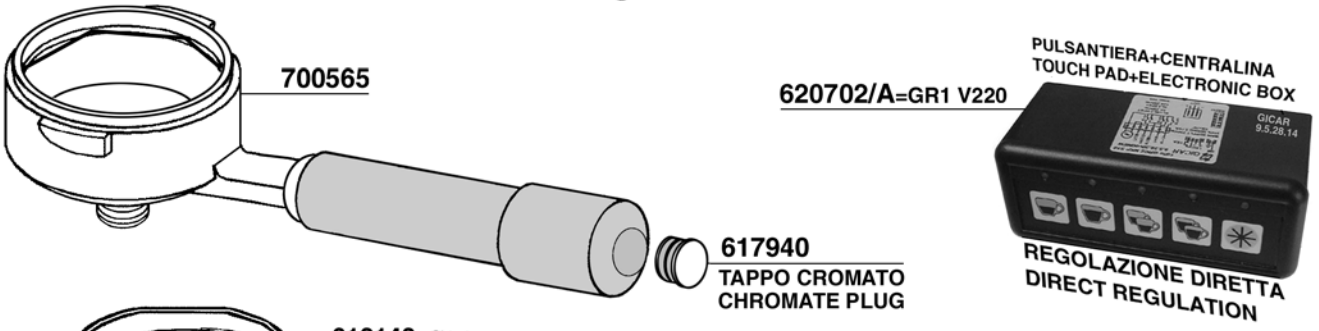

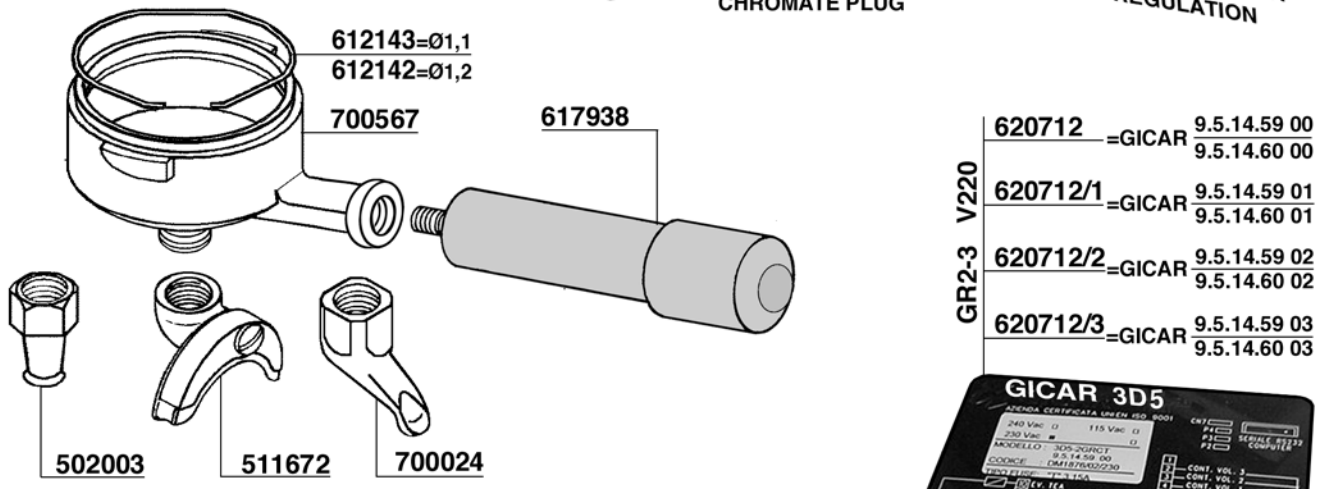

GR2-3 V220	620712	=GICAR	9.5.14.59 00 / 9.5.14.60 00
	620712/1	=GICAR	9.5.14.59 01 / 9.5.14.60 01
	620712/2	=GICAR	9.5.14.59 02 / 9.5.14.60 02
	620712/3	=GICAR	9.5.14.59 03 / 9.5.14.60 03

FLUSSO REGOLABILE
ADJUSTABLE FLOW

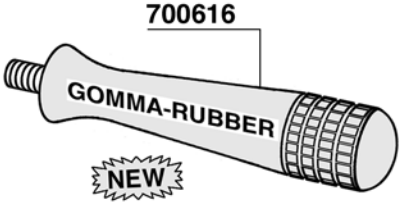

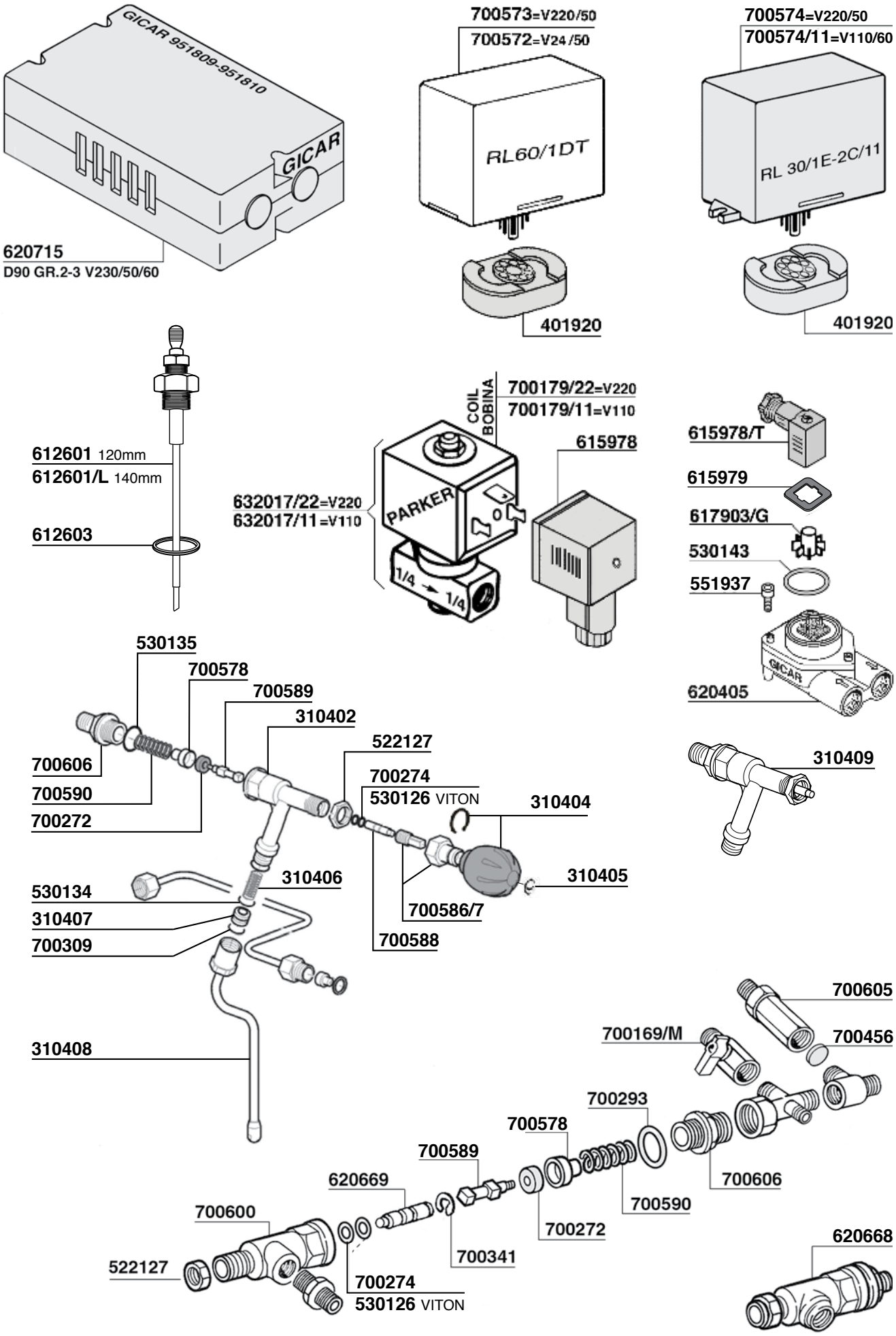
GICAR 951809-951810
GICAR
620715
D90 GR.2-3 V230/50/60
700573=V220/50
700572=V24/50
RL60/1DT
401920
700574=V220/50
700574/11=V110/60
RL 30/1E-2C/11
401920
612601 120mm
612601/L 140mm
612603
COIL
BOBINA
700179/22=V220
700179/11=V110
632017/22=V220
632017/11=V110
PARKER
1/4 → 1/4
615978
615978/T
615979
617903/G
530143
551937
620405
GICAR
530135
700578
700589
310402
522127
700606
700590
700272
700274
530126 VITON
310404
310405
310409
530134
310406
310407
700309
700586/7
700588
310408
700605
700169/M
700456
700293
700578
700589
620669
700606
700590
700600
700272
700341
522127
700274
530126 VITON
620668

GAGGIA

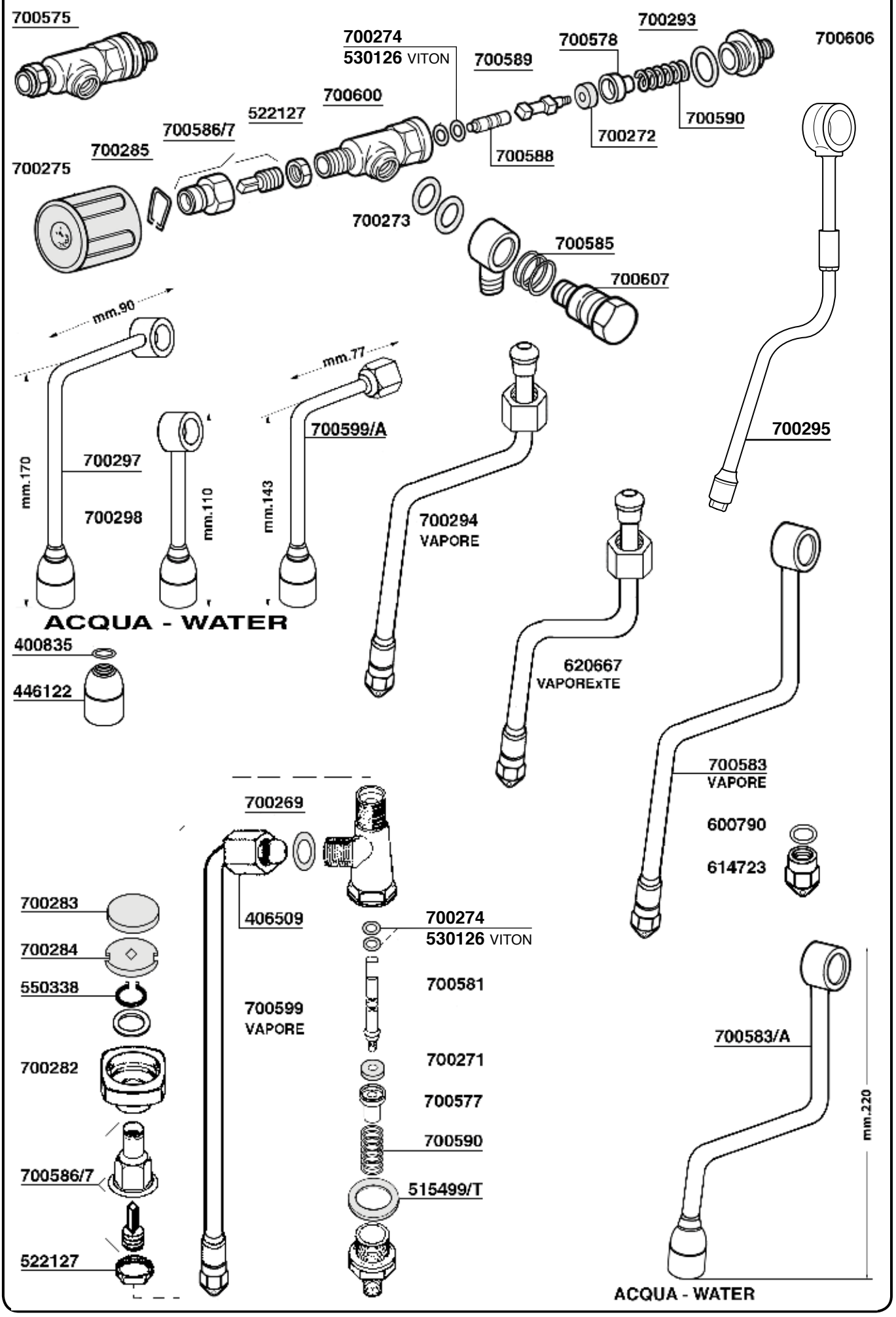
700575
700274
530126 VITON
700589
700578
700293
700606
700600
522127
700586/7
700285
700275
700588
700272
700590
700273
700585
700607
mm.90
mm.77
700599/A
700295
700297
mm.170
700298
mm.110
mm.143
700294
VAPORE
ACQUA - WATER
400835
446122
620667
VAPOREXTE
700583
VAPORE
700269
600790
614723
700283
406509
700274
530126 VITON
700284
550338
700581
700599
VAPORE
700583/A
700282
700271
700577
700590
mm.220
700586/7
515499/T
522127
ACQUA - WATER

GAGGIA

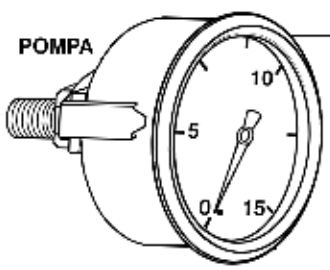
POMPA
700595
Ø52mm.

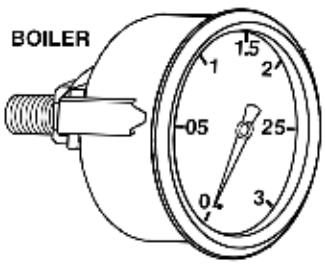
BOILER
700594
Ø52mm.

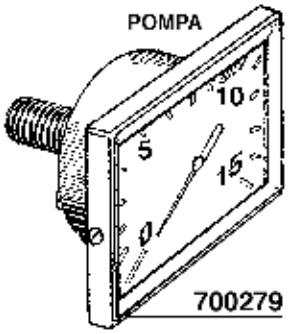
POMPA
700279

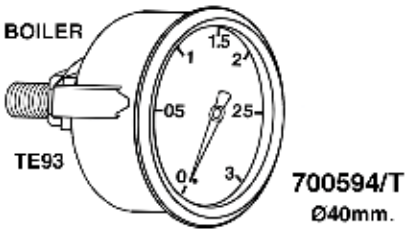
BOILER
TE93
700594/T
Ø40mm.

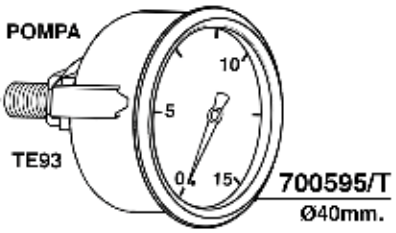
POMPA
TE93
700595/T
Ø40mm.

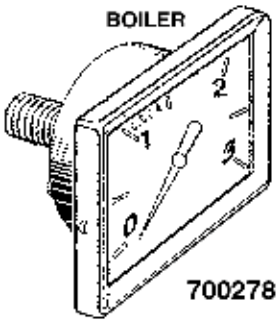
BOILER
700278

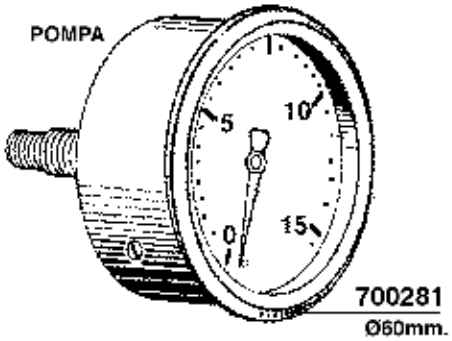
POMPA
700281
Ø60mm.

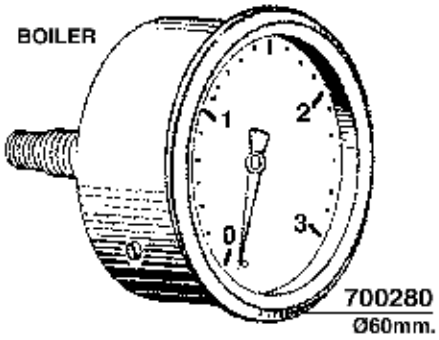
BOILER
700280
Ø60mm.

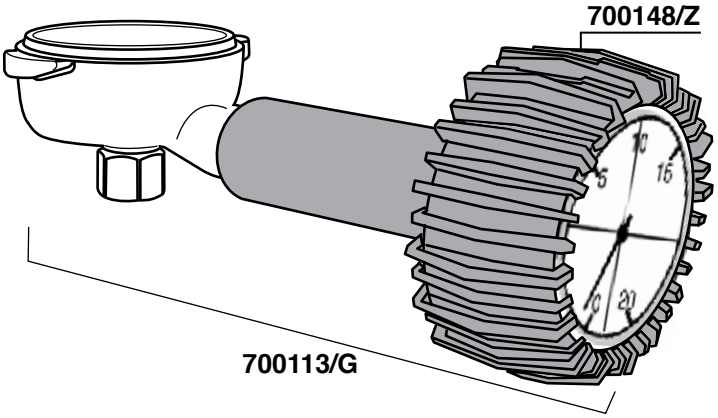
700148/Z
700113/G

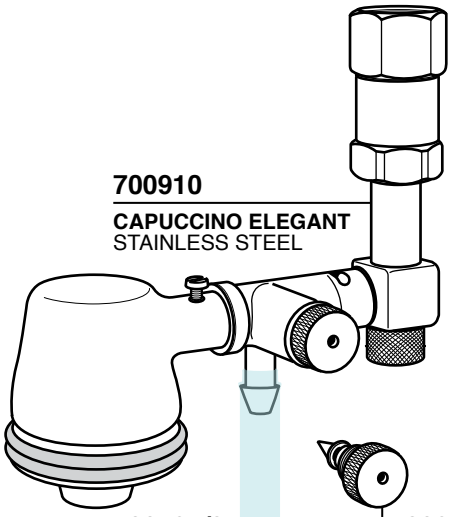
700910
CAPUCCINO ELEGANT
STAINLESS STEEL
700197/8
SILICON Ø 5x8
700914
PERNO
REGOLAZIONE

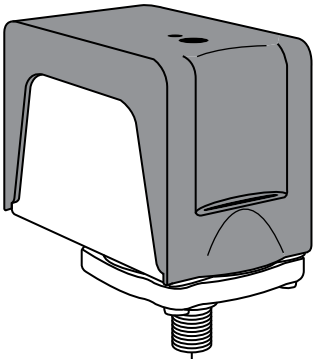
616597 CE/UL

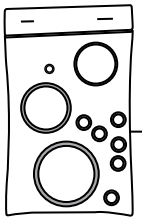
700913
KIT O-RING

GAGGIA

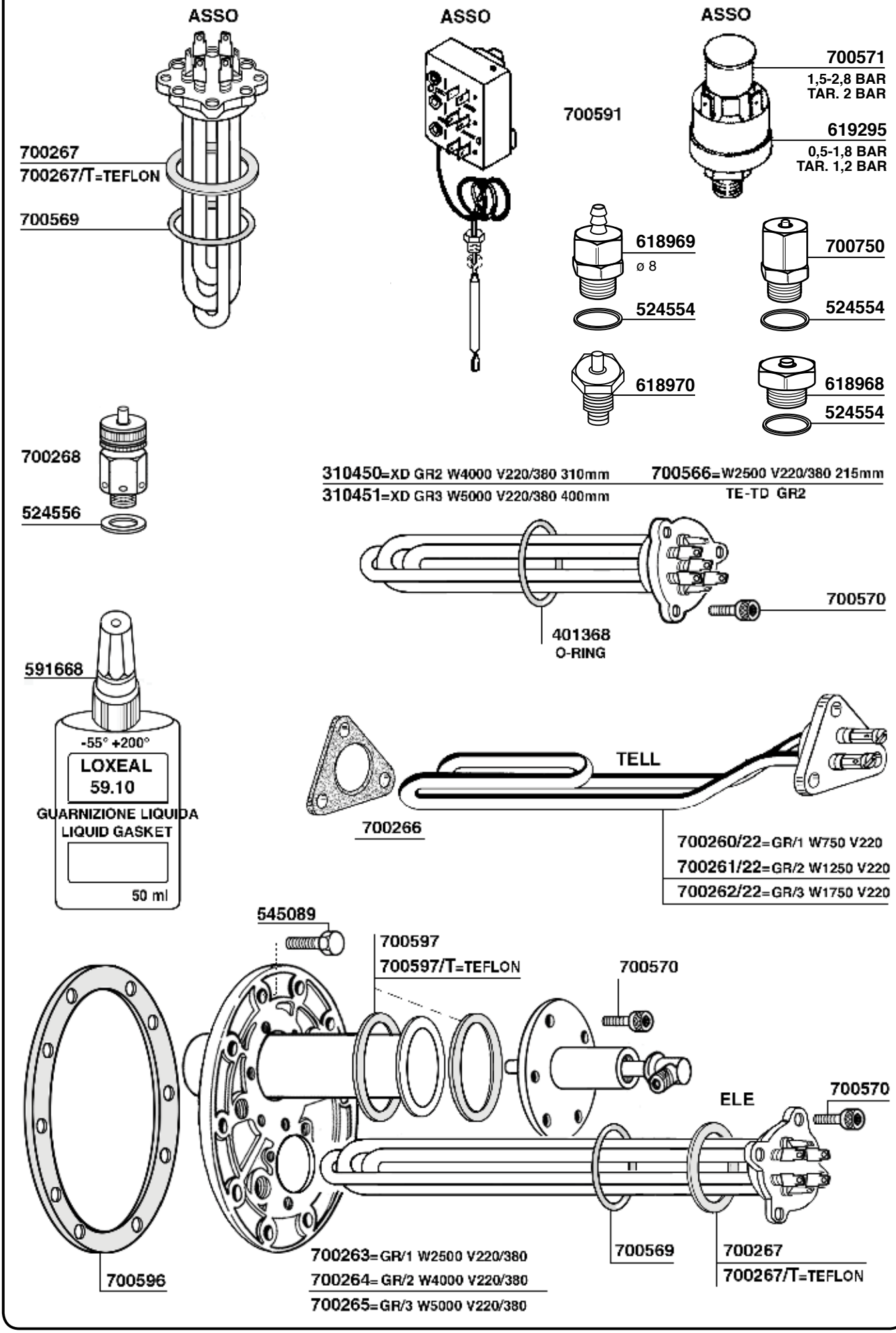
ASSO
ASSO
ASSO
700267
700267/T=TEFLON
700569
700591
700571
1,5-2,8 BAR
TAR. 2 BAR
619295
0,5-1,8 BAR
TAR. 1,2 BAR
618969
ø 8
524554
700750
524554
618970
618968
524554
700268
524556
310450=XD GR2 W4000 V220/380 310mm
310451=XD GR3 W5000 V220/380 400mm
700566=W2500 V220/380 215mm
TE-TD GR2
700570
401368
O-RING
591668
-55° +200°
LOXEAL
59.10
GUARNIZIONE LIQUIDA
LIQUID GASKET
50 ml
TELL
700266
700260/22=GR/1 W750 V220
700261/22=GR/2 W1250 V220
700262/22=GR/3 W1750 V220
545089
700597
700597/T=TEFLON
700570
ELE
700570
700596
700263=GR/1 W2500 V220/380
700264=GR/2 W4000 V220/380
700265=GR/3 W5000 V220/380
700569
700267
700267/T=TEFLON

GAGGIA

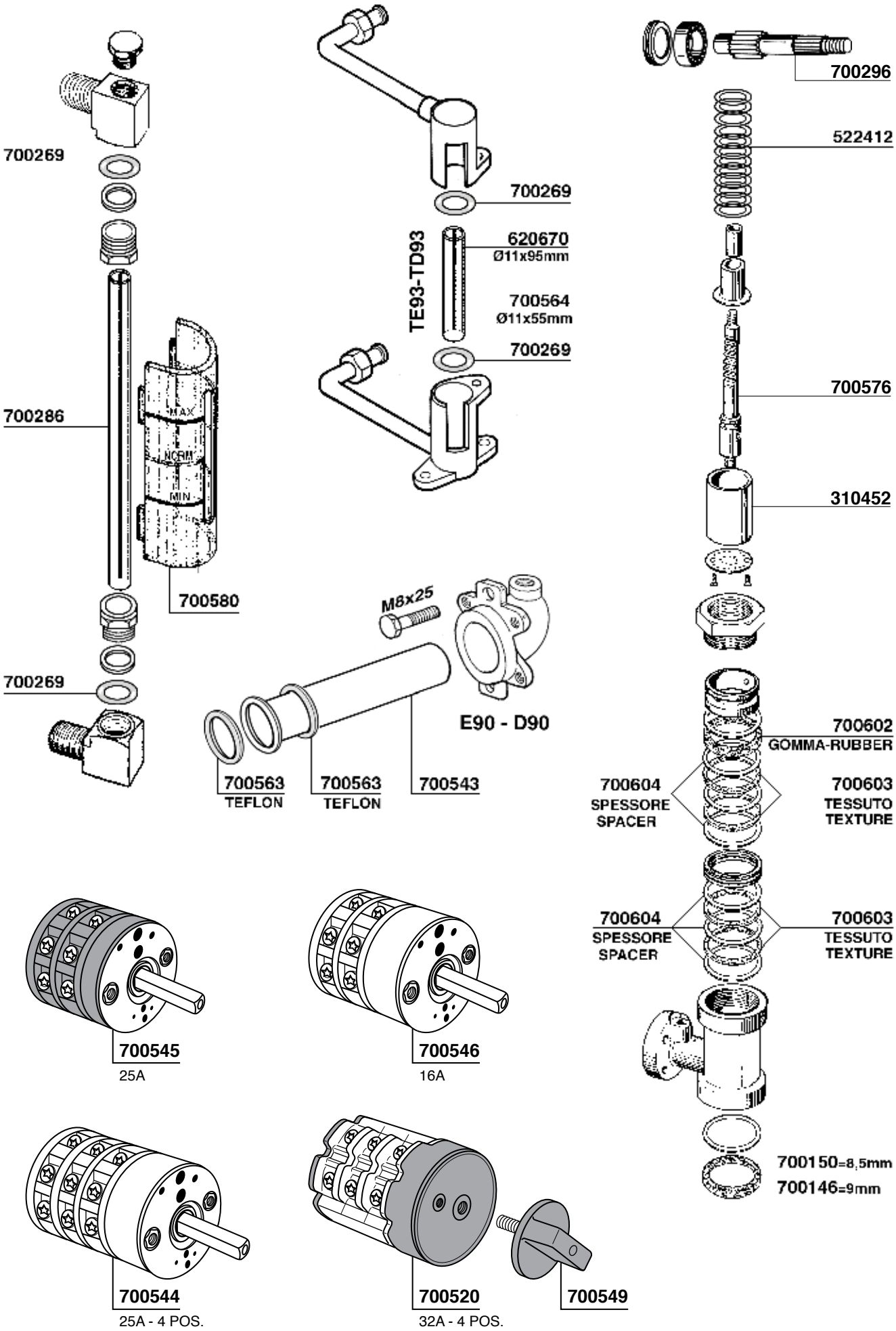
700269
700286
MAX
NORM
MIN
700580
700269
700269
620670
Ø11x95mm
TE93-TD93
700564
Ø11x55mm
700269
700296
522412
700576
310452
M8x25
E90 - D90
700563
TEFLON
700563
TEFLON
700543
700602
GOMMA-RUBBER
700604
SPESSORE
SPACER
700603
TESSUTO
TEXTURE
700604
SPESSORE
SPACER
700603
TESSUTO
TEXTURE
700150=8,5mm
700146=9mm
700545
25A
700546
16A
700544
25A - 4 POS.
700520
32A - 4 POS.
700549

GAGGIA

BABY

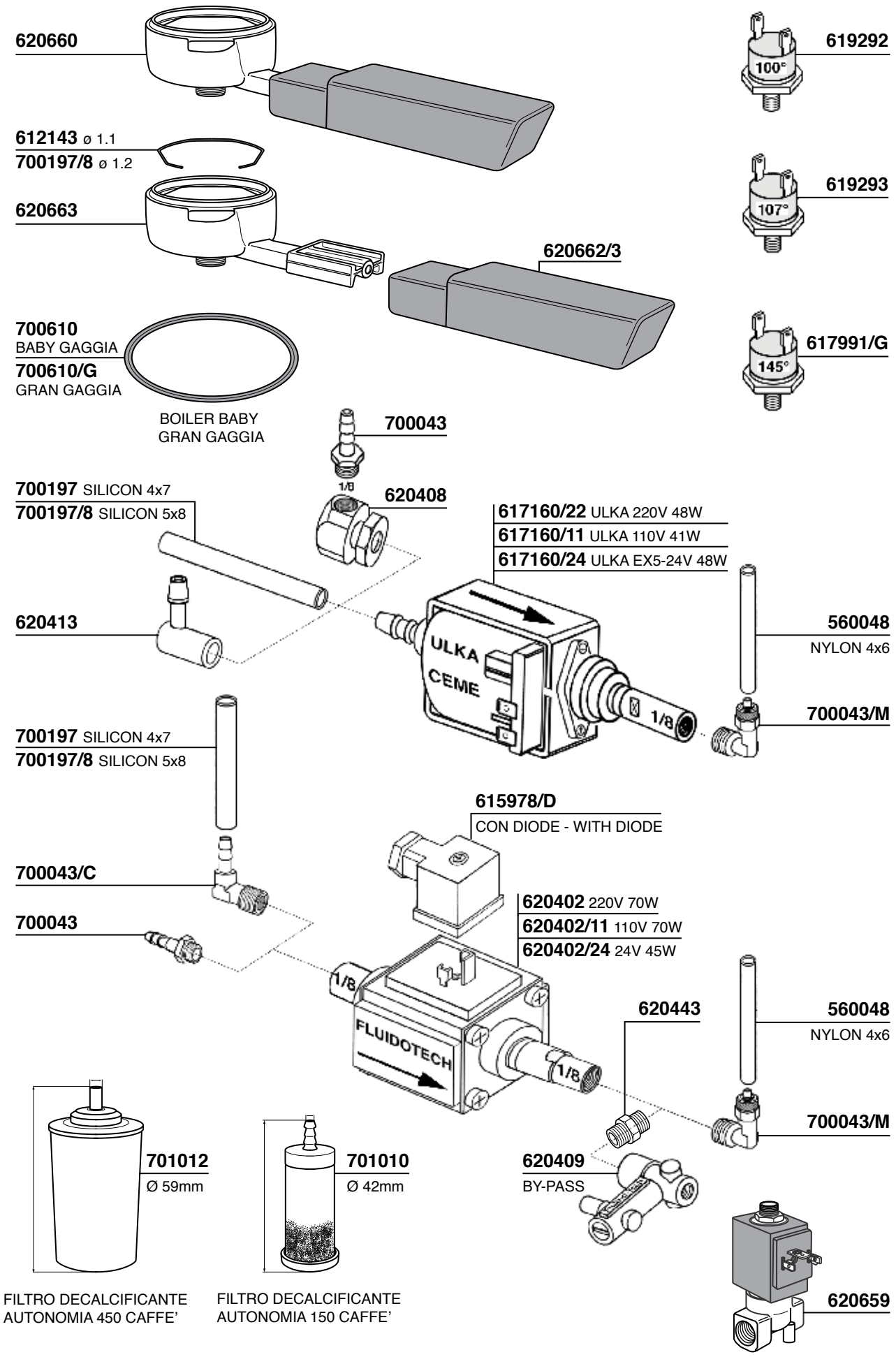
620660
619292
100°
612143 ø 1.1
700197/8 ø 1.2
619293
107°
620663
620662/3
700610
BABY GAGGIA
700610/G
GRAN GAGGIA
617991/G
145°
BOILER BABY
GRAN GAGGIA
700043
1/8
620408
700197 SILICON 4x7
700197/8 SILICON 5x8
617160/22 ULKA 220V 48W
617160/11 ULKA 110V 41W
617160/24 ULKA EX5-24V 48W
620413
560048
NYLON 4x6
ULKA
CEME
1/8
700043/M
700197 SILICON 4x7
700197/8 SILICON 5x8
615978/D
CON DIODE - WITH DIODE
700043/C
620402 220V 70W
620402/11 110V 70W
620402/24 24V 45W
700043
1/8
620443
560048
NYLON 4x6
FLUIDOTECH
1/8
700043/M
701012
Ø 59mm
701010
Ø 42mm
620409
BY-PASS
FILTRO DECALCIFICANTE
AUTONOMIA 450 CAFFE'
FILTRO DECALCIFICANTE
AUTONOMIA 150 CAFFE'
620659

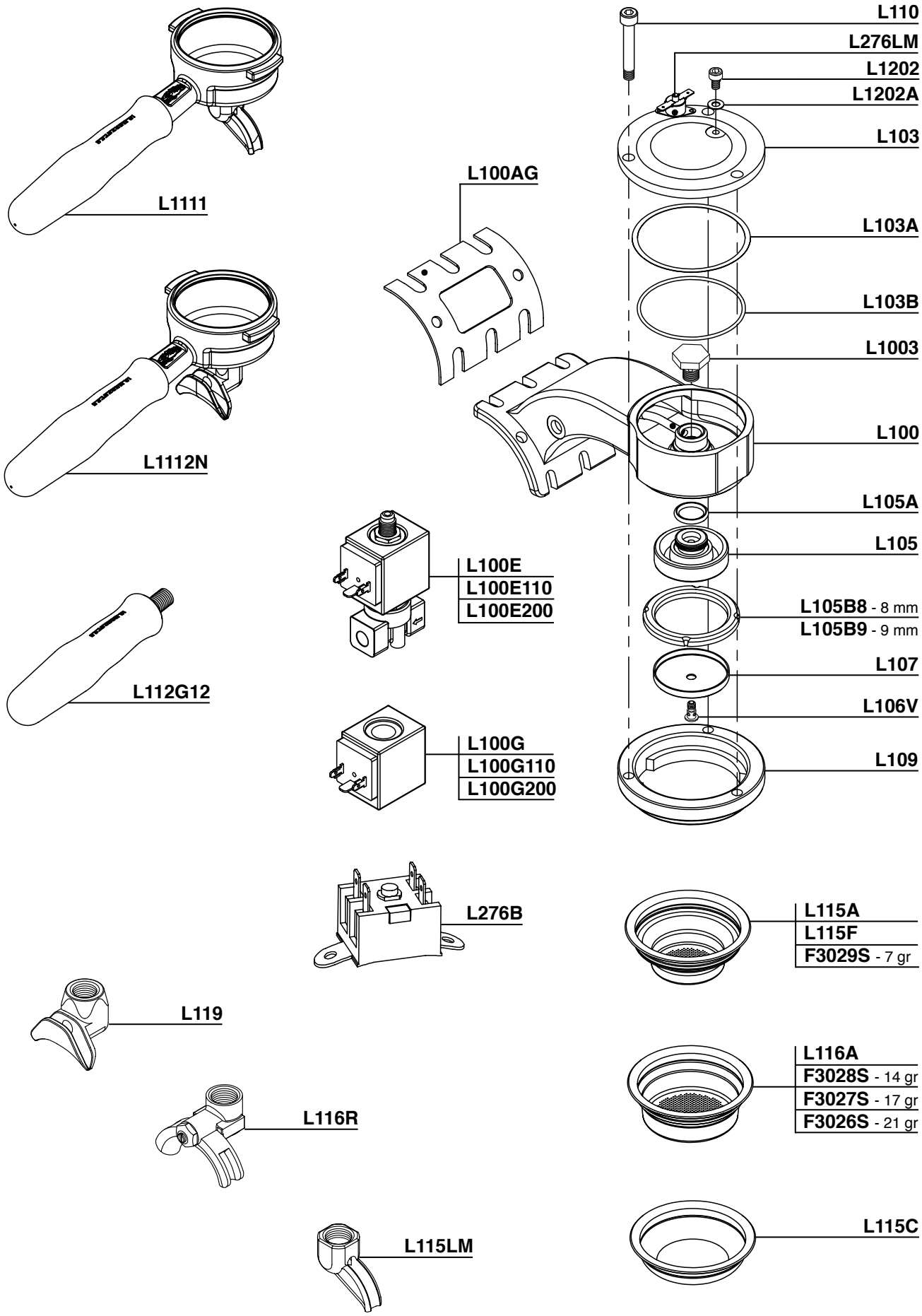
L110
L276LM
L1202
L1202A
L103
L100AG
L1111
L103A
L103B
L1003
L1112N
L100
L105A
L105
L100E
L100E110
L100E200
L105B8 - 8 mm
L105B9 - 9 mm
L107
L112G12
L106V
L100G
L100G110
L100G200
L109
L276B
L115A
L115F
F3029S - 7 gr
L119
L116A
F3028S - 14 gr
F3027S - 17 gr
F3026S - 21 gr
L116R
L115C
L115LM

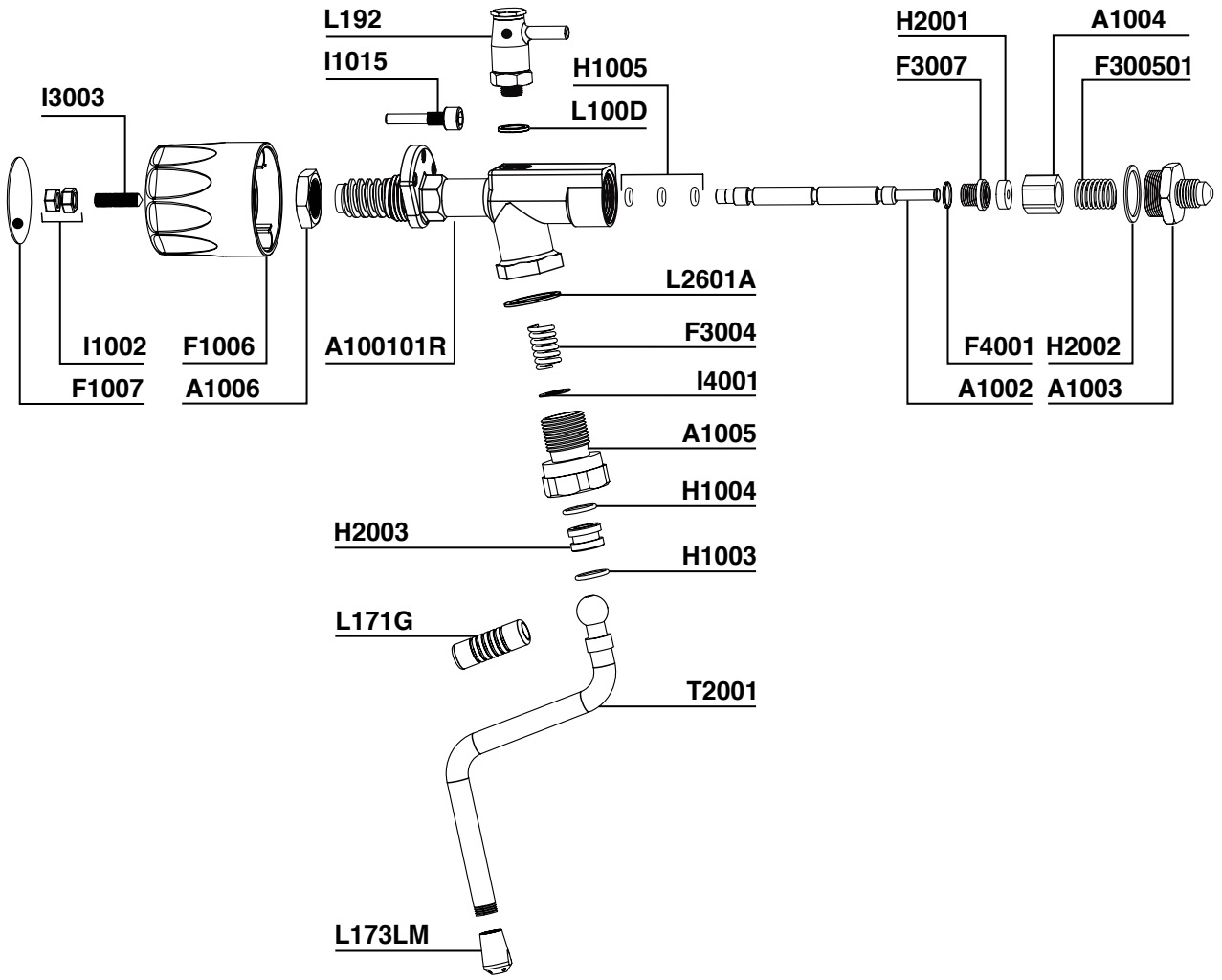
L192
I1015
H1005
L100D
H2001
F3007
A1004
F300501
I3003
L2601A
F3004
I4001
A1005
H1004
H1003
H2003
L171G
T2001
L173LM
I1002
F1007
F1006
A1006
A100101R
F4001
A1002
H2002
A1003

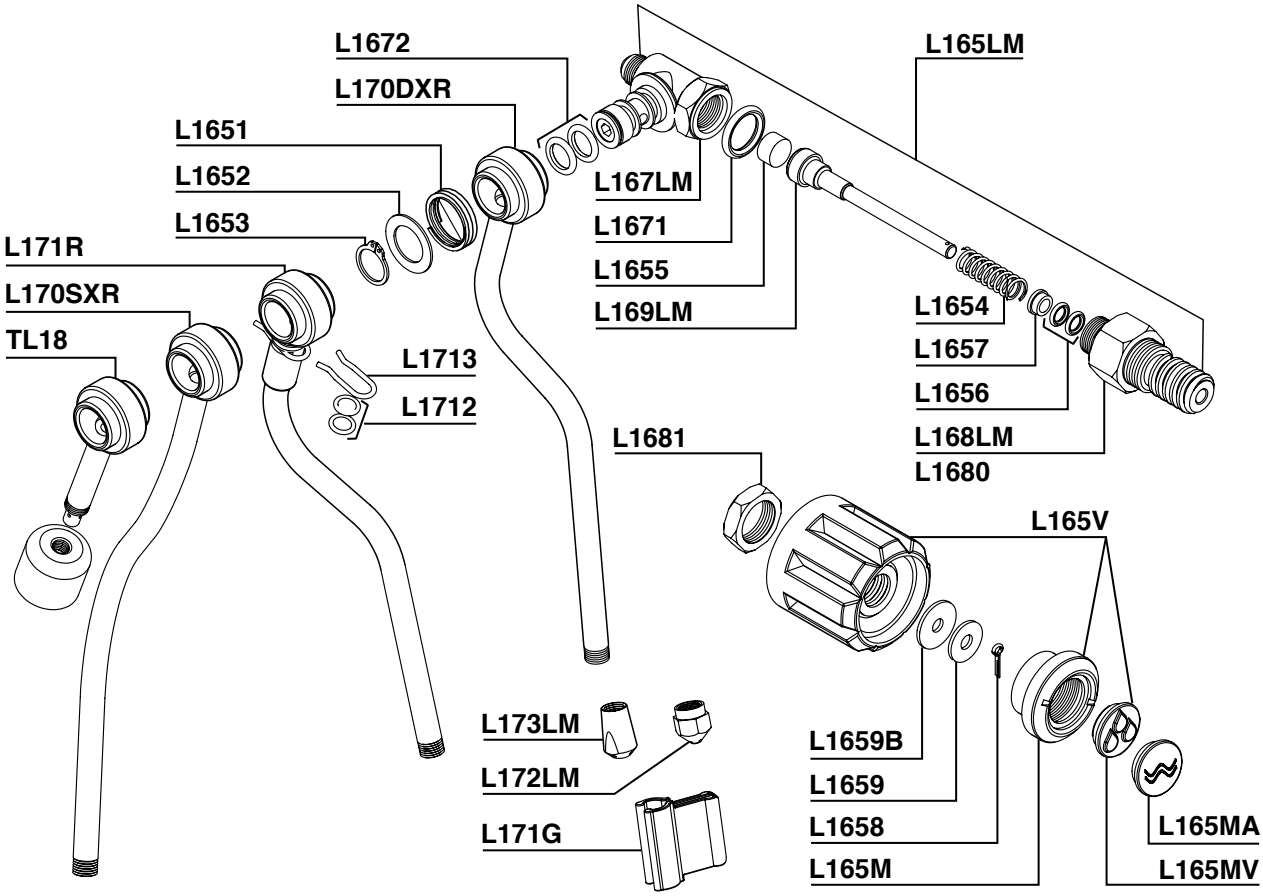
L1672
L170DXR
L165LM
L1651
L1652
L1653
L167LM
L1671
L1655
L169LM
L171R
L170SXR
TL18
L1713
L1712
L1654
L1657
L1656
L168LM
L1680
L1681
L165V
L173LM
L172LM
L171G
L1659B
L1659
L1658
L165M
L165MA
L165MV

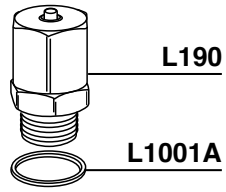
L190
L1001A

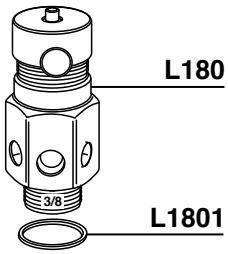
L180
3/8
L1801

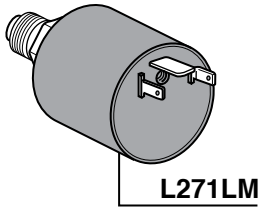
L271LM

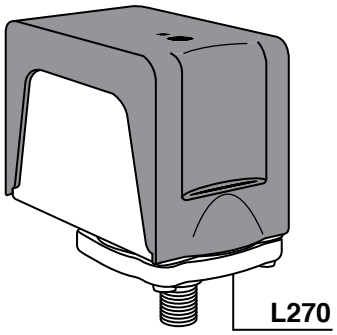
L270

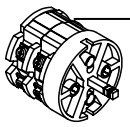
L40032

L400T1

L400K

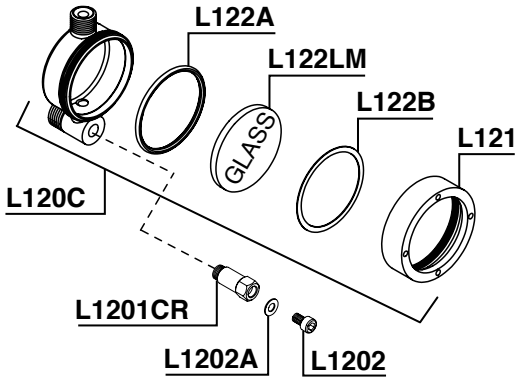
L122A
L122LM
GLASS
L122B
L121
L120C
L1201CR
L1202A
L1202

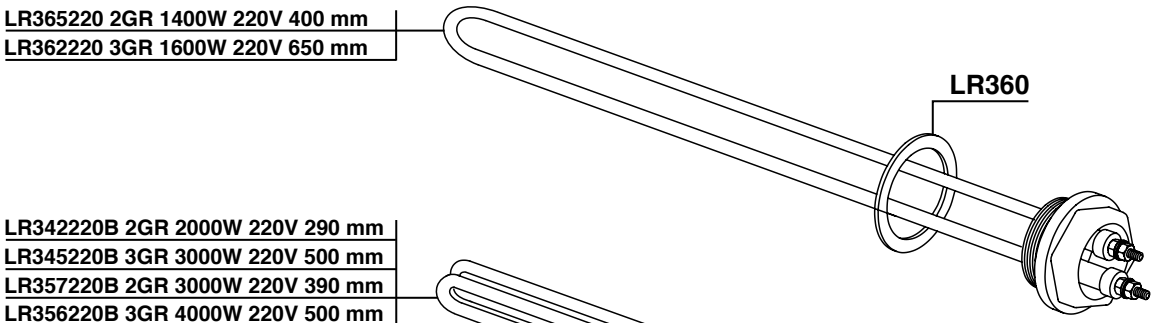
LR365220 2GR 1400W 220V 400 mm
LR362220 3GR 1600W 220V 650 mm
LR360

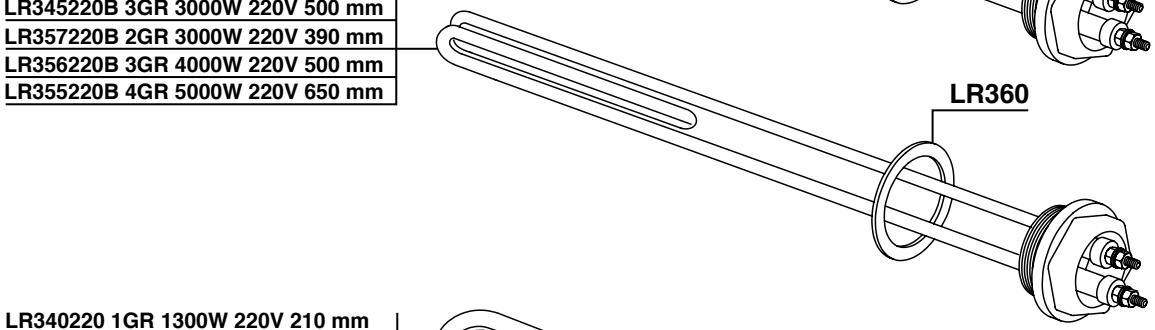
LR342220B 2GR 2000W 220V 290 mm
LR345220B 3GR 3000W 220V 500 mm
LR357220B 2GR 3000W 220V 390 mm
LR356220B 3GR 4000W 220V 500 mm
LR355220B 4GR 5000W 220V 650 mm
LR360

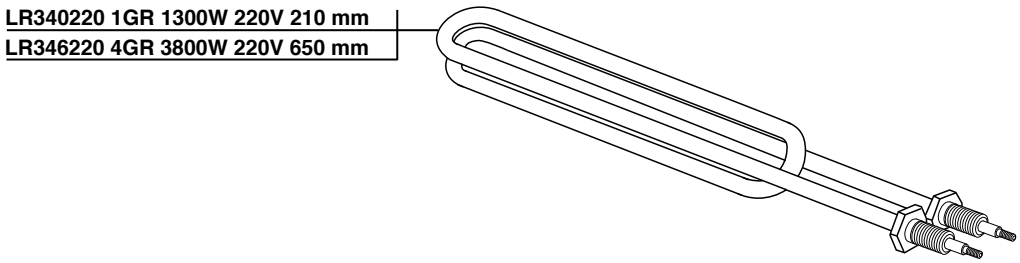
LR340220 1GR 1300W 220V 210 mm
LR346220 4GR 3800W 220V 650 mm

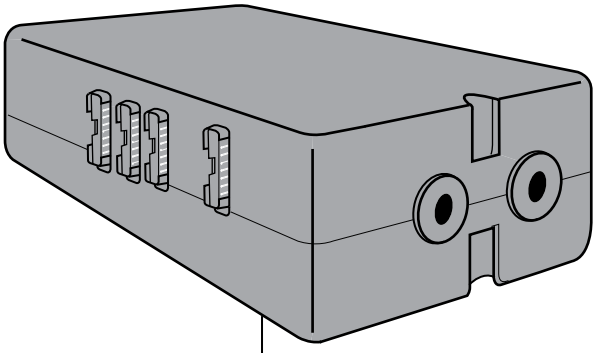

LAD0703 GR3
LAD0704 GR4

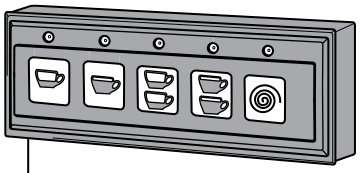

LAD071THE
LAD071VT

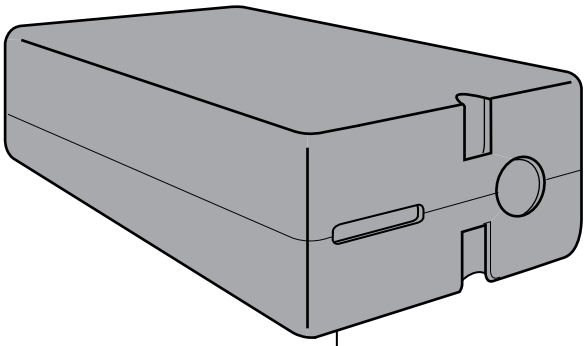

LAD3D54

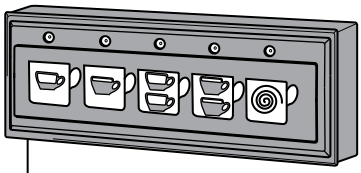

LAD3D5THE

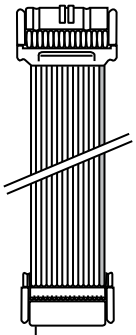

LAD3D5C01 16 PINS - 800mm
LAD3D5C02 16 PINS - 110mm
LAD3D5C03 16 PINS - 1400mm

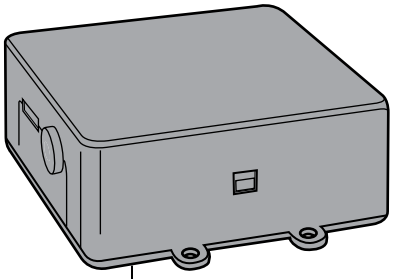

LAD3D53
LAD3D53LC

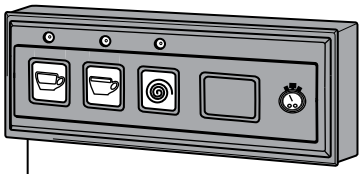

LAD3D5P3C

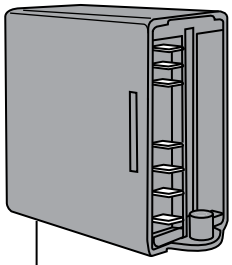

LA050

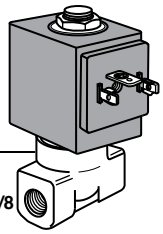

L053 220V
L053200 200V
L053240 240V

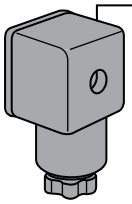

L205

L283C

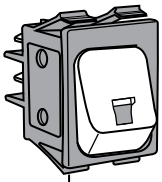

L2851

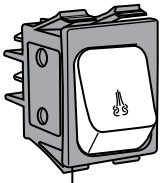

L2861

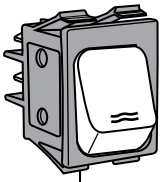

L286LM

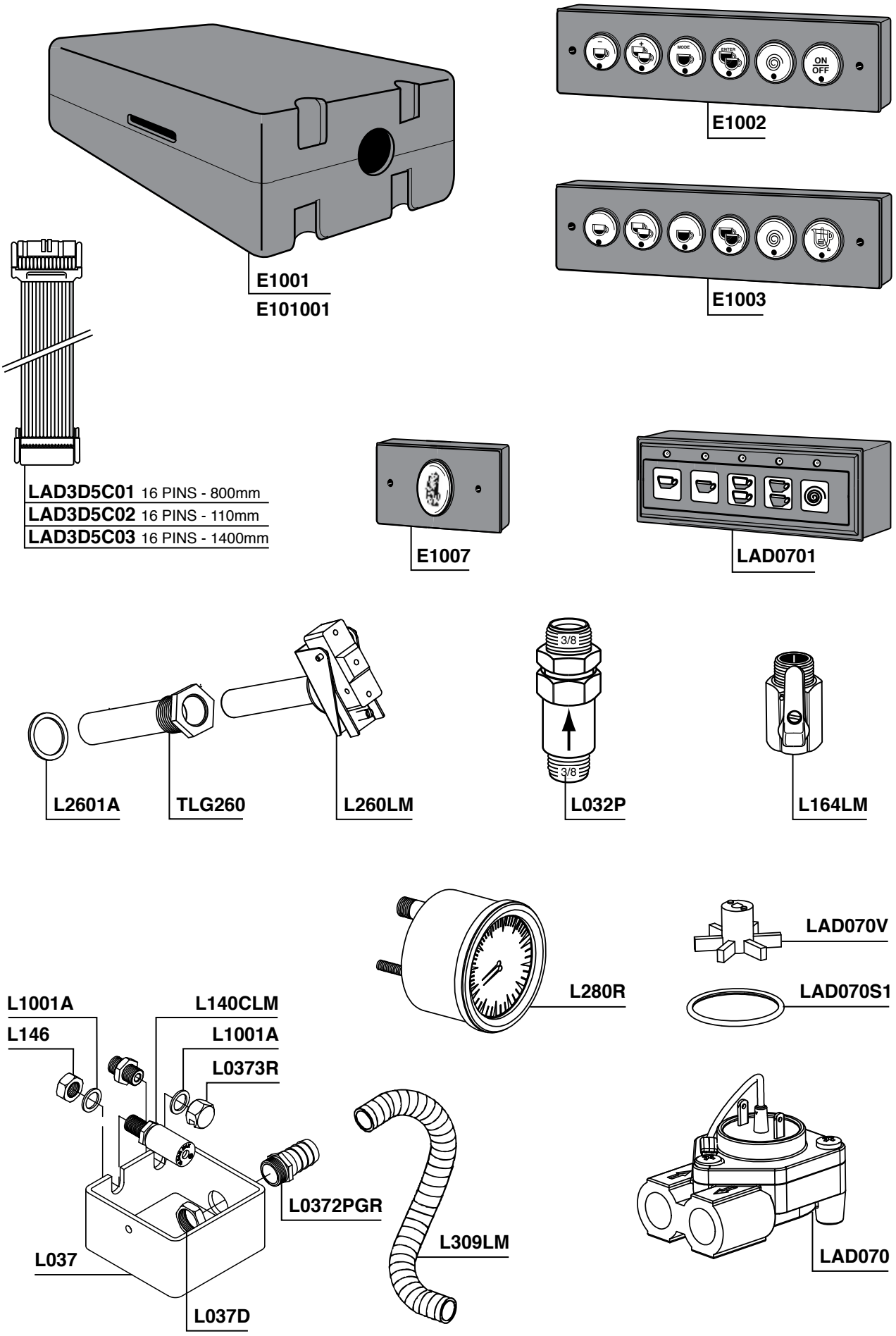
E1001
E101001
E1002
E1003
LAD3D5C01 16 PINS - 800mm
LAD3D5C02 16 PINS - 110mm
LAD3D5C03 16 PINS - 1400mm
E1007
LAD0701
L2601A
TLG260
L260LM
3/8
3/8
L032P
L164LM
L280R
LAD070V
LAD070S1
L1001A
L146
L140CLM
L1001A
L0373R
L0372PGR
L309LM
L037
L037D
LAD070

LA SAN MARCO

700419

700396
700396/T=TEFLON

700450

700451

700418/T
TEFLON

Ø 50

630404
MOD.85-95

524767

700402

700400
700400/V

700418/T
TEFLON

630405

551934

700418/T
TEFLON

700475

700176 =LUCIFER
700177 =PARKER

630406 3/4"
630415 1/2"

700401

700486

700485

547101

700439

700181/22 =V220
700181/11 =V110
700179/22 =V220
700179/11 =V110

LUCIFER
PARKER

700395

615978

700148/Z

700301/22 =V220
700301/11 =V110
LUCIFER

700152/22 =V220
700152/11 =V110
PARKER

700113/SM

LA SAN MARCO

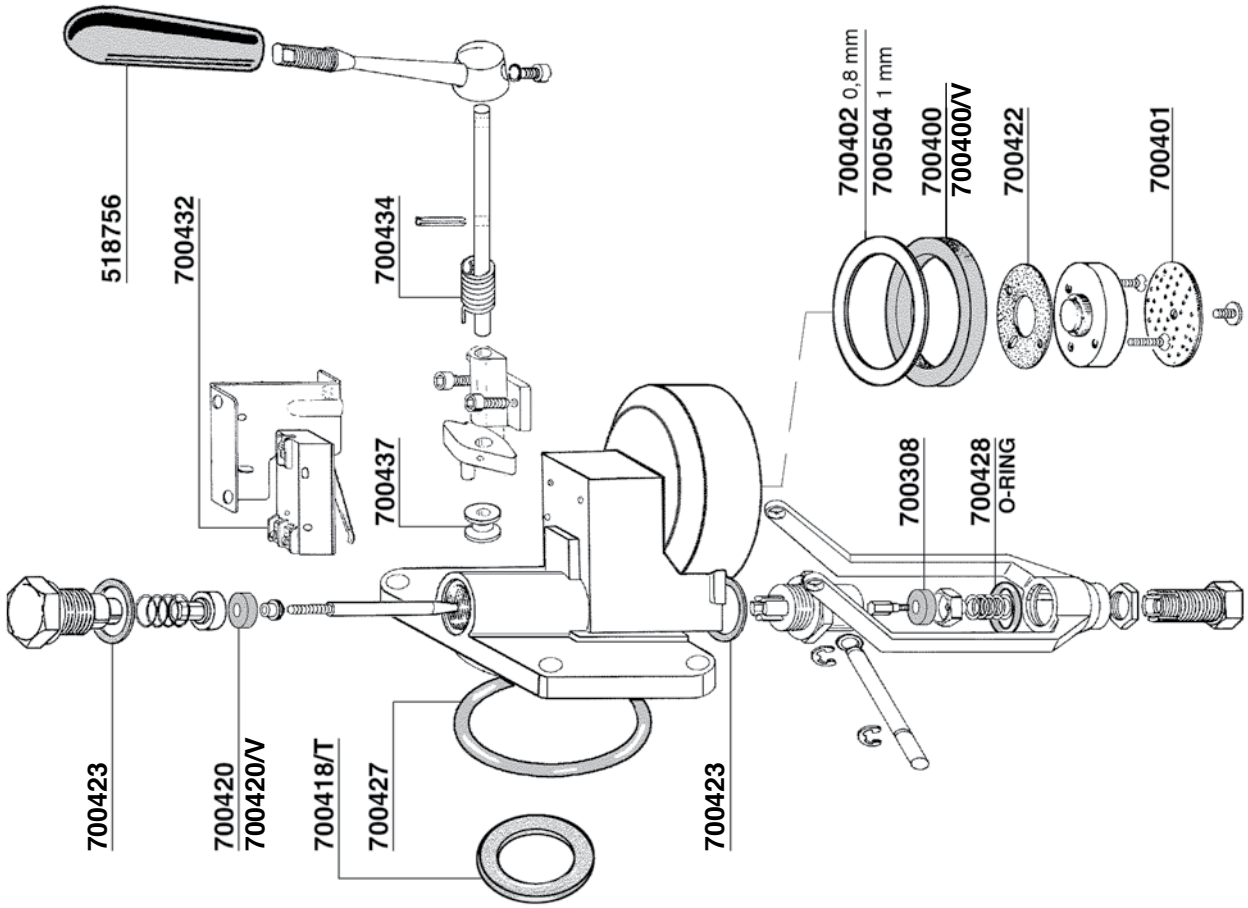
518756
700432
700434
700437
700423
700420
700420/V
700418/T
700427
700423
700402 0,8 mm
700504 1 mm
700400
700400/V
700422
700401
700308
700428
O-RING

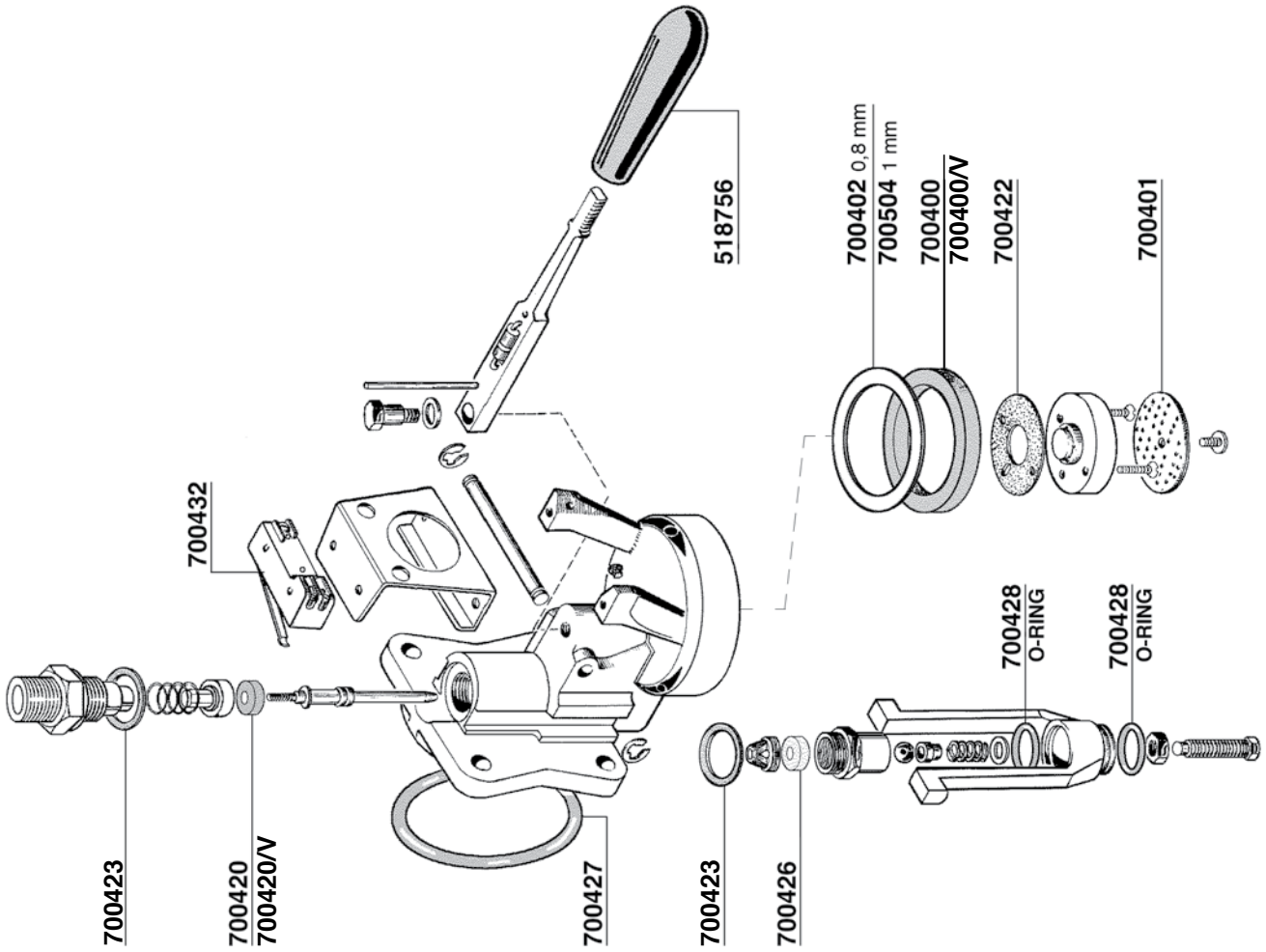
518756
700432
700423
700420
700420/V
700427
700423
700426
700402 0,8 mm
700504 1 mm
700400
700400/V
700422
700401
700428
O-RING
700428
O-RING

LA SAN MARCO

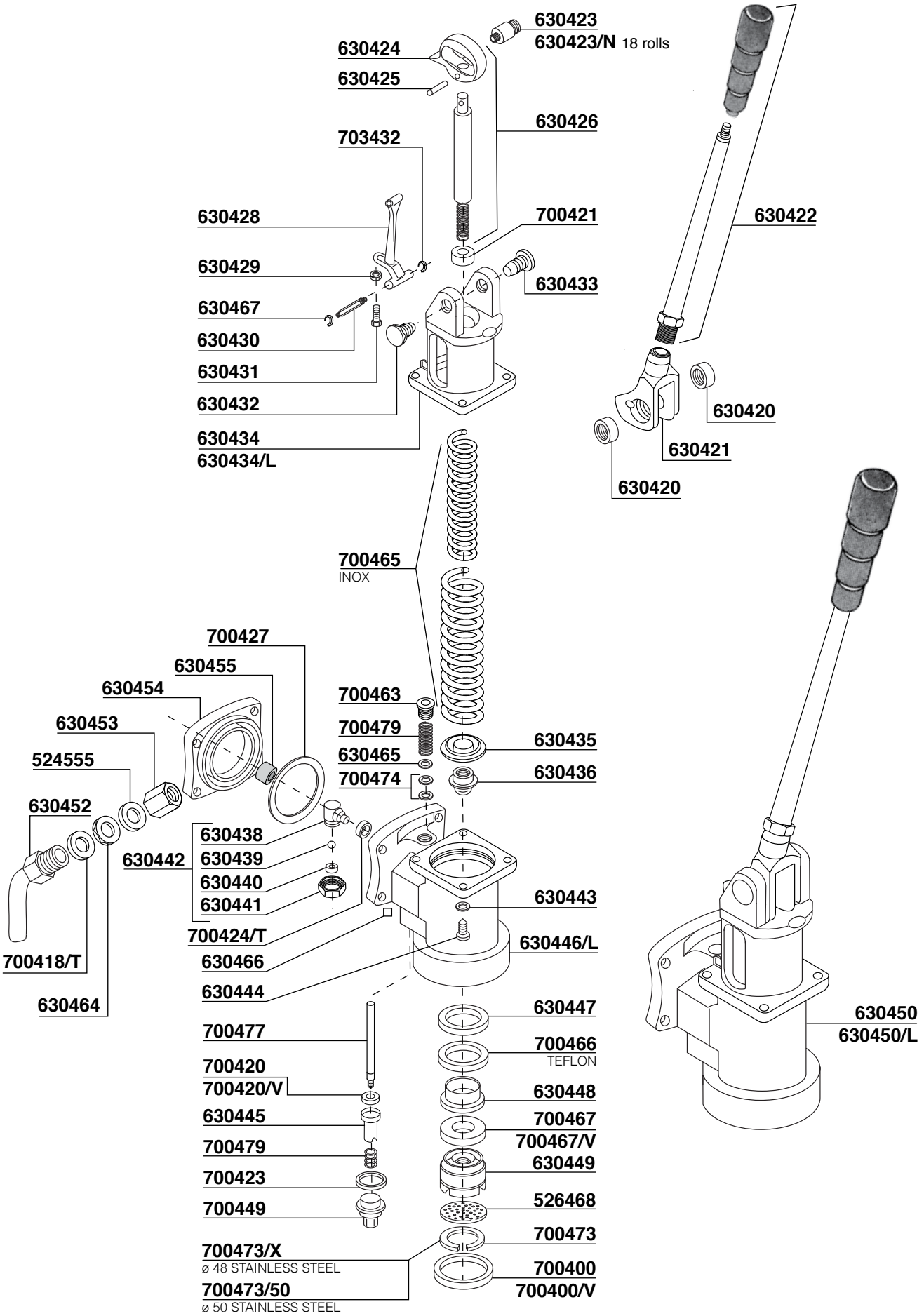
630423
630423/N 18 rolls
630424
630425
630426
703432
630428
700421
630422
630429
630433
630467
630430
630431
630432
630434
630434/L
630420
630421
630420
700465
INOX
700427
630455
630454
700463
630453
700479
630435
524555
630465
630436
700474
630452
630438
630442
630439
630440
630441
630443
700424/T
630446/L
700418/T
630466
630444
630464
630447
630450
630450/L
700477
700466
TEFLON
700420
700420/V
630448
630445
700467
700467/V
700479
630449
700423
526468
700449
700473
700473/X
ø 48 STAINLESS STEEL
700400
700473/50
700400/V
ø 50 STAINLESS STEEL

LA SAN MARCO

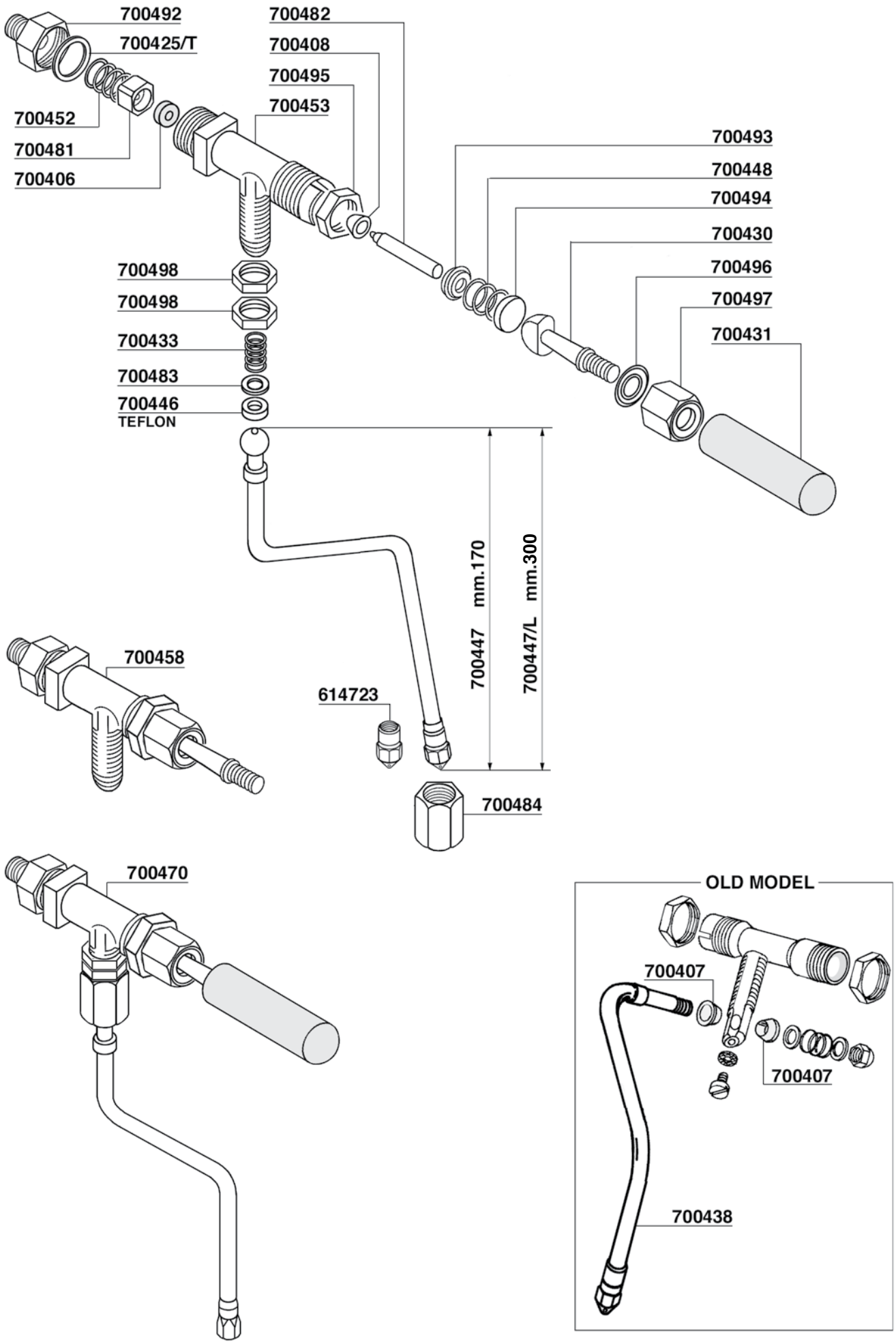
700492
700425/T
700452
700481
700406
700482
700408
700495
700453
700493
700448
700494
700430
700496
700497
700431
700498
700498
700433
700483
700446
TEFLON
700447 mm.170
700447/L mm.300
700458
614723
700484
700470
OLD MODEL
700407
700407
700438

LA SAN MARCO

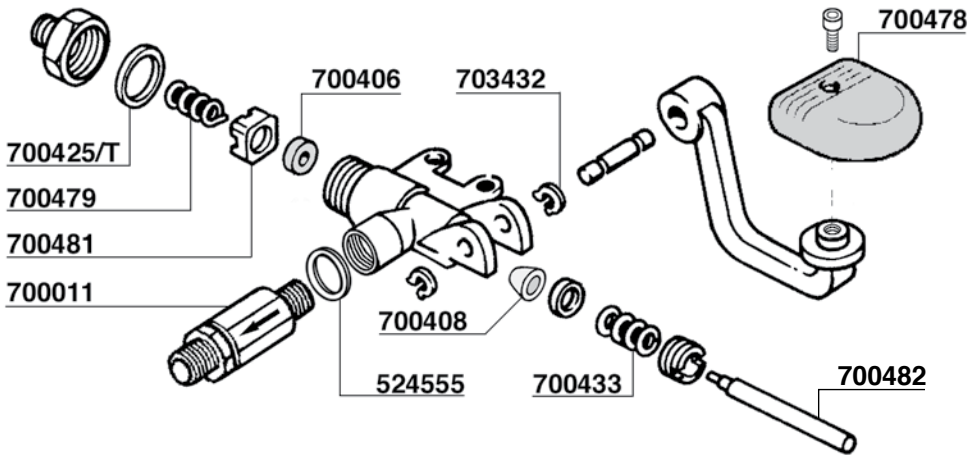
700478
700406
703432
700425/T
700479
700481
700011
700408
524555
700433
700482

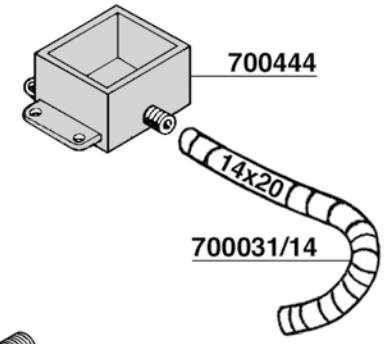
700444
14x20
700031/14

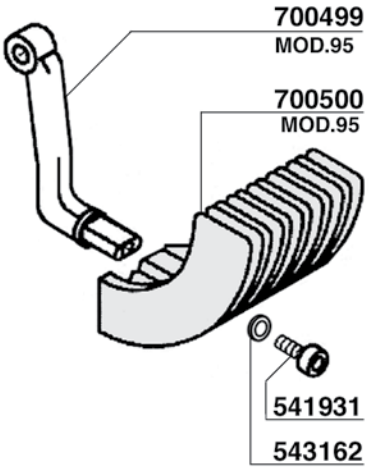
700499
MOD.95
700500
MOD.95
541931
543162

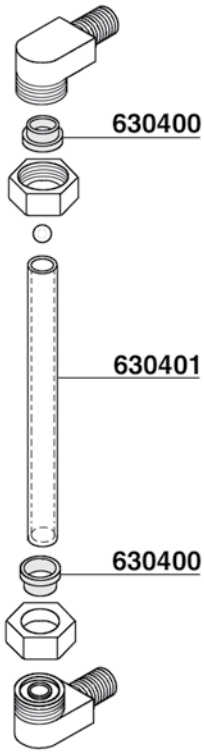
630400
630401
630400

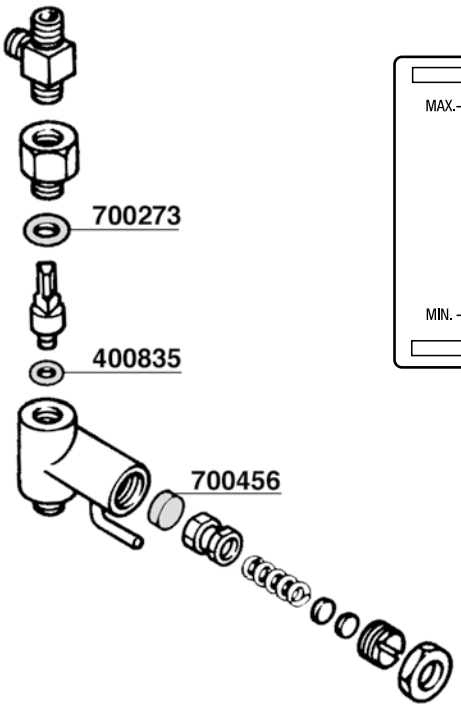
700273
400835
700456

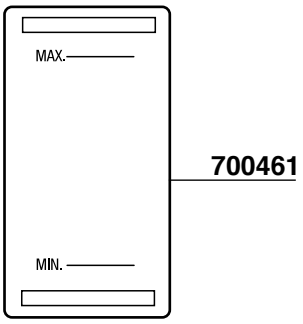
MAX.
MIN.
700461

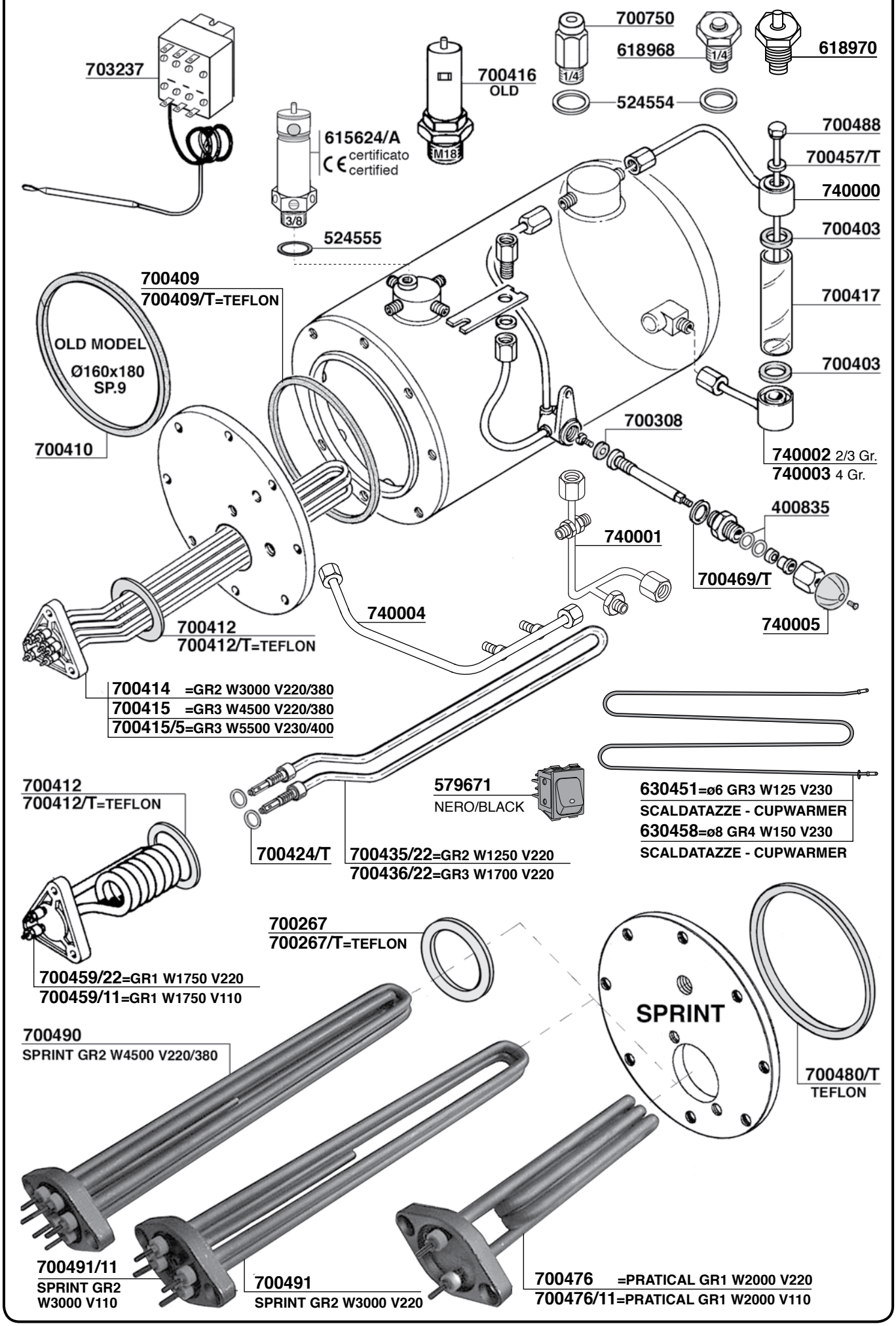
703237
700750
618968
1/4
618970
700416
OLD
M18
524554
615624/A
certificato
certified
3/8
524555
700488
700457/T
740000
700403
700417
700403
700409
700409/T=TEFLON
OLD MODEL
Ø160x180
SP.9
700410
700308
740002 2/3 Gr.
740003 4 Gr.
400835
740001
700469/T
740005
740004
700412
700412/T=TEFLON
700414 =GR2 W3000 V220/380
700415 =GR3 W4500 V220/380
700415/5=GR3 W5500 V230/400
579671
NERO/BLACK
630451=ø6 GR3 W125 V230
SCALDATAZZE - CUPWARMER
630458=ø8 GR4 W150 V230
SCALDATAZZE - CUPWARMER
700412
700412/T=TEFLON
700424/T
700435/22=GR2 W1250 V220
700436/22=GR3 W1700 V220
700267
700267/T=TEFLON
700459/22=GR1 W1750 V220
700459/11=GR1 W1750 V110
SPRINT
700490
SPRINT GR2 W4500 V220/380
700480/T
TEFLON
700491/11
SPRINT GR2
W3000 V110
700491
SPRINT GR2 W3000 V220
700476 =PRATICAL GR1 W2000 V220
700476/11=PRATICAL GR1 W2000 V110

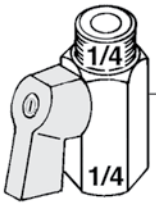

700170/V

700039

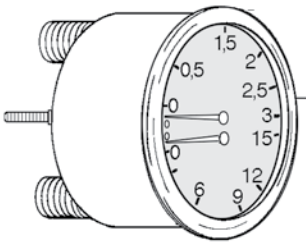

700411

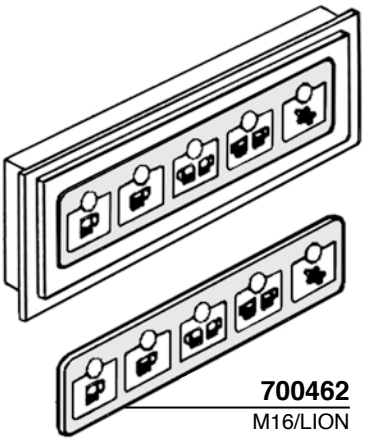

700462
M16/LION

700440

MOLLA MOTORE MACININO
GRINDER MOTOR SPRING

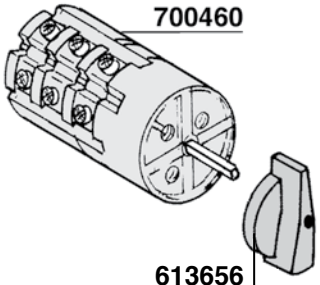

700460

613656
630462
SERIE 85-95 LEVA

630416
SM85E

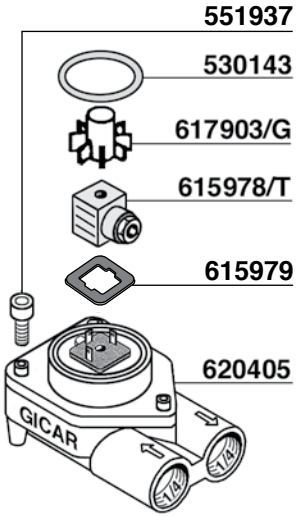

551937
530143
617903/G
615978/T
615979
620405

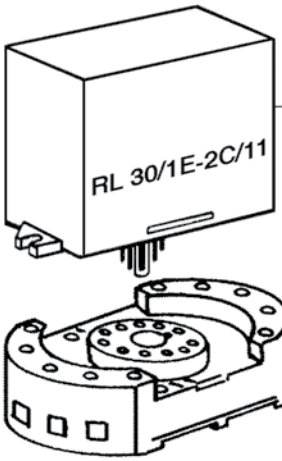

700574=V220
700574/11=V110

401920

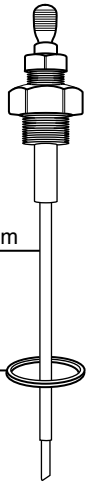

612601 120mm

524554

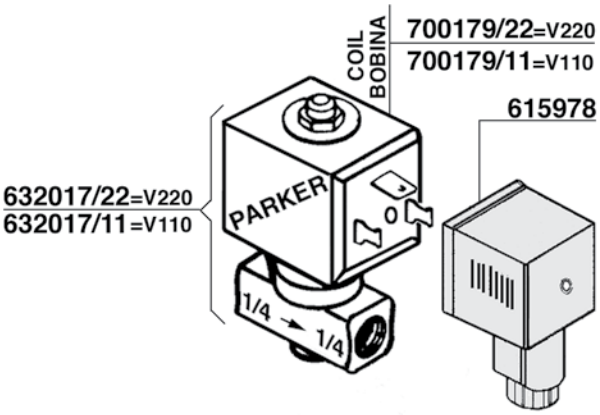

COIL
BOBINA
700179/22=V220
700179/11=V110

615978

632017/22=V220
632017/11=V110

620205

THERMOMETER
0 - 100°C

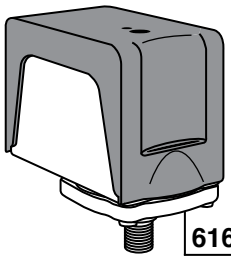

616597 CE/UL

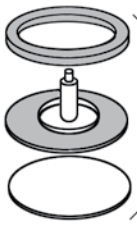

700124
Ø55mm

700464

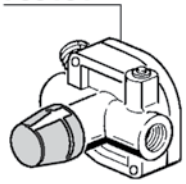

621080
PUSH BUTTON

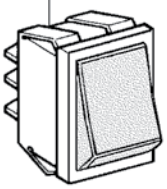

700429
INTERRUTTORE
SWITCH

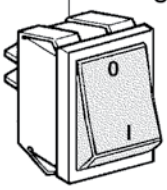

700399
PLASTIC

700399/G
GOMMA-RUBBER

700399/S
PLASTIC

NEW
GOMMA-RUBBER
700616

612143/C
630407
PLASTIC
700413
PLASTIC

700405
14gr.
CON BORDINO
700405/A
21gr.

700404
9gr.
CON BORDINO

700487
FILTRO CIECO
BLIND FILTER

617940
TAPPO CROMATO
CHROMED PLUG
617938

700024
511672
502003

630411
SUPPORTO DISPLAY+THE'
TEA DISPLAY COVER

630414
SUPPORTO DOSATURA
DOSING DISPLAY

630412
MASCHERA RUBINETTO
VAPORE-ACQUA
WATER-STEAM TAP COVER

630413
MASCHERA INTERRUTTORE-
MANOPOLA GAS
SWITCH-GAS DIAL COVER

630408
MASCHERA GRUPPO T1 '95'
GROUP COVER T1 '95'

630409
SUPPORTO PULSANTI DOSI
DOSING BUTTONS SUPPORT

630410
SUPPORTO INTERRUTTORE ON-OFF
ON-OFF SWITCH SUPPORT

LA SPAZIALE

S5 ALL VERSION - S2 ALL VERSION - S8 ALL VERSION - S9 ALL VERSION
S40 SELETRON - S40 SUPREMA

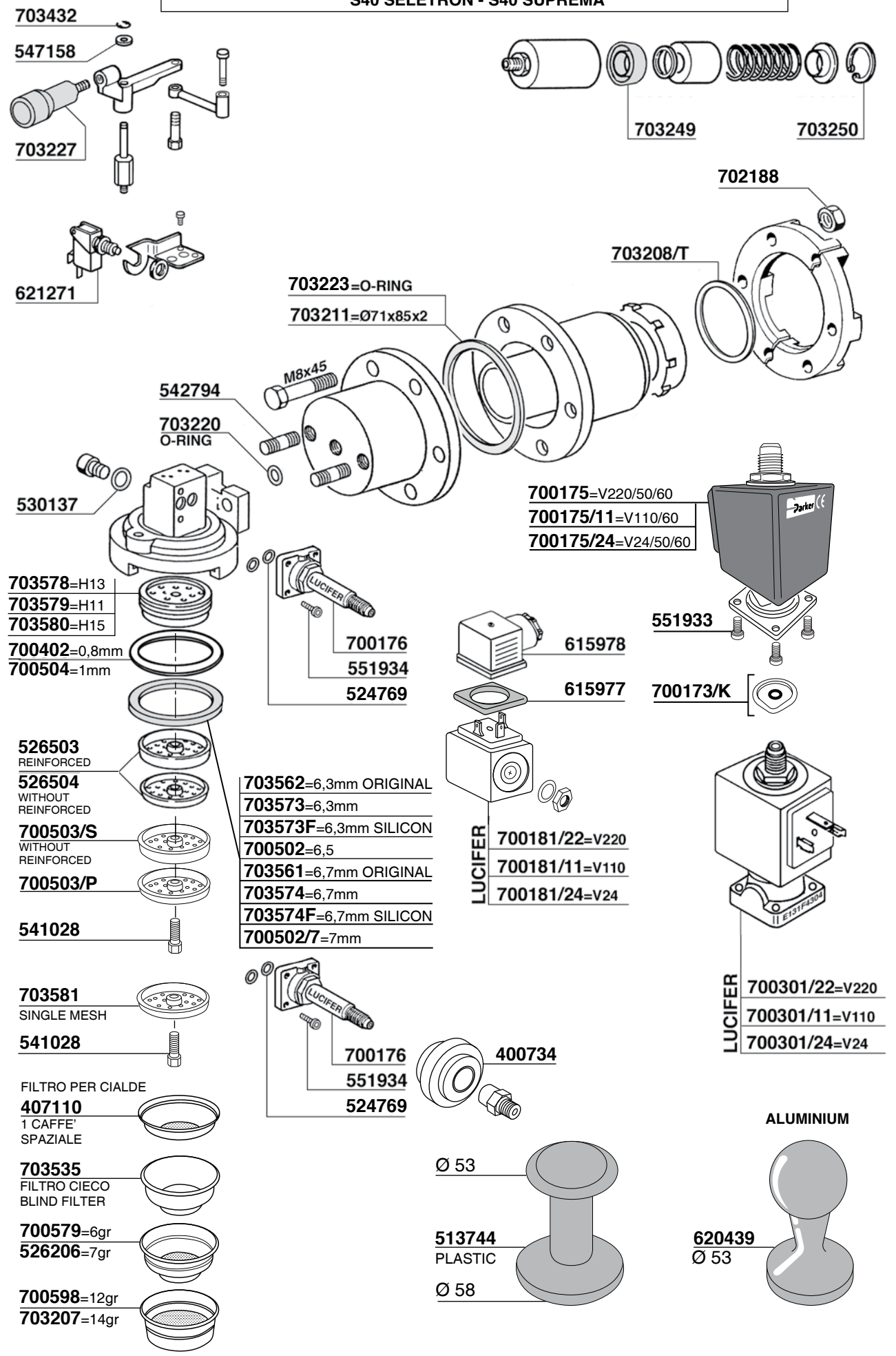

LA SPAZIALE

NEW3000 - NEW EC

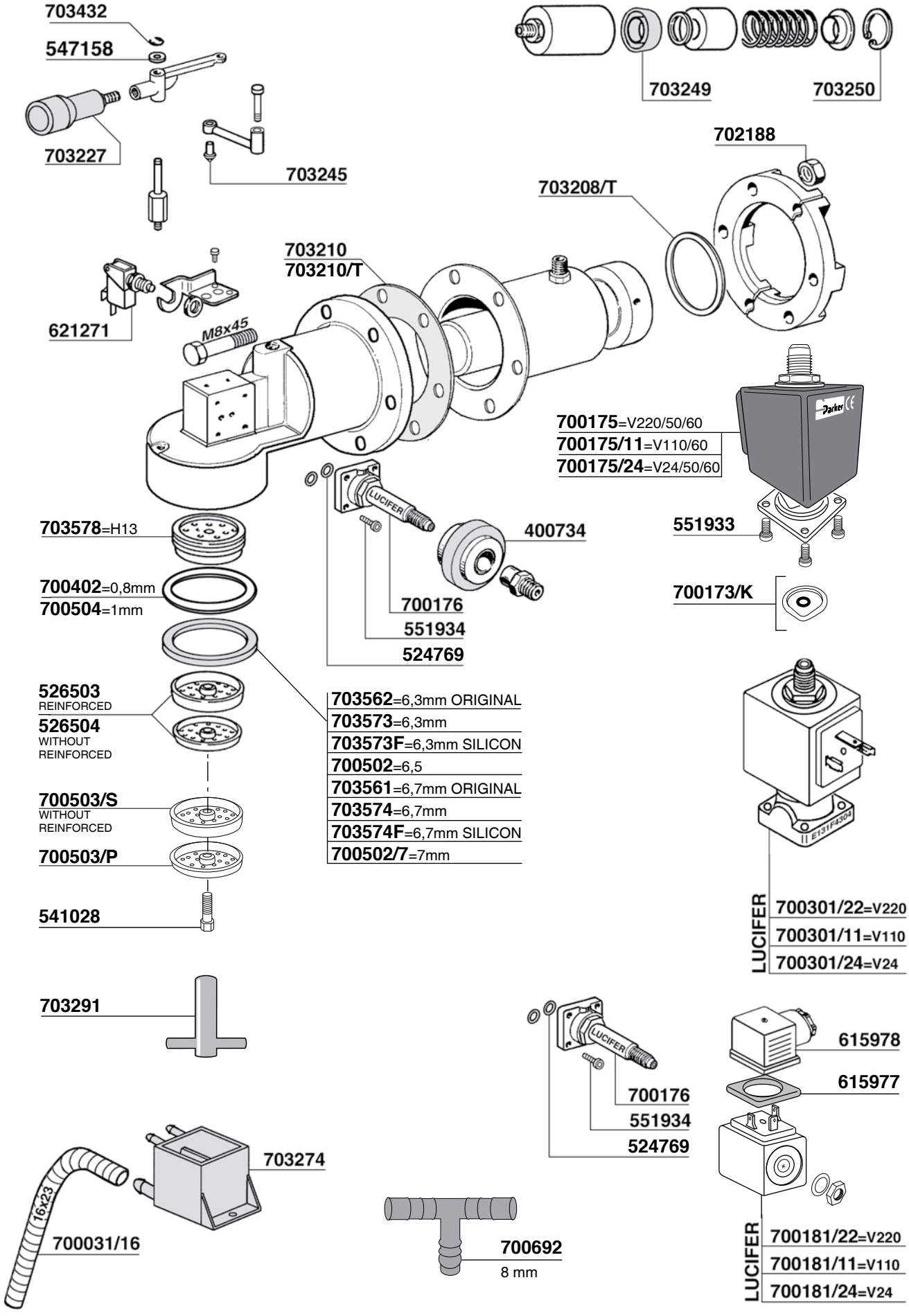

LA SPAZIALE

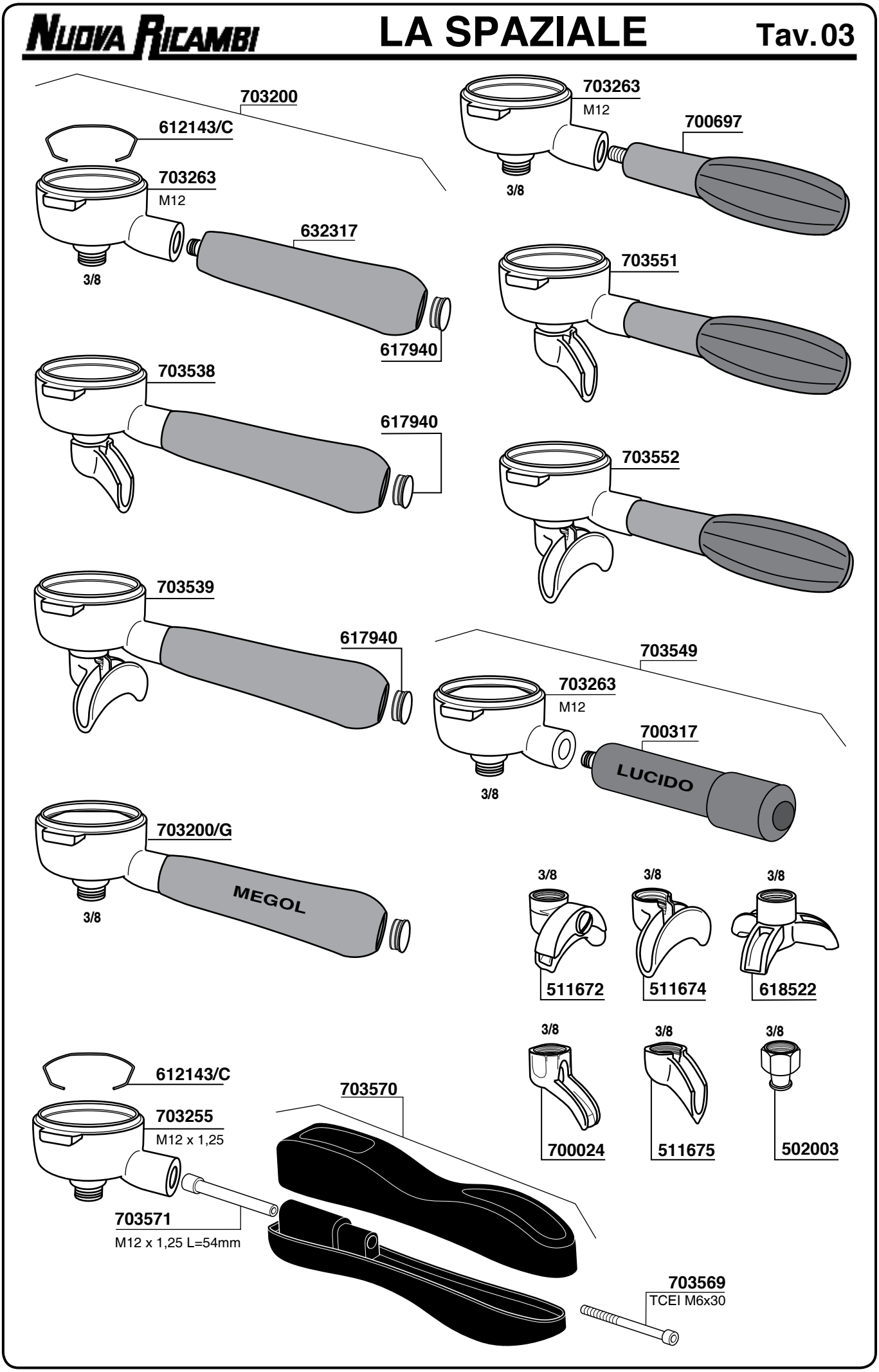
703200
612143/C
703263
M12
3/8
632317
617940
703263
M12
3/8
700697
703551
703538
617940
703552
703539
617940
703549
703263
M12
3/8
700317
LUCIDO
703200/G
MEGOL
3/8
3/8
511672
3/8
511674
3/8
618522
3/8
700024
3/8
511675
3/8
502003
612143/C
703255
M12 x 1,25
703570
703571
M12 x 1,25 L=54mm
703569
TCEI M6x30

LA SPAZIALE

NEW - SUPER 300 - RAPID - SPAZIO - SPAZIO SPECIAL

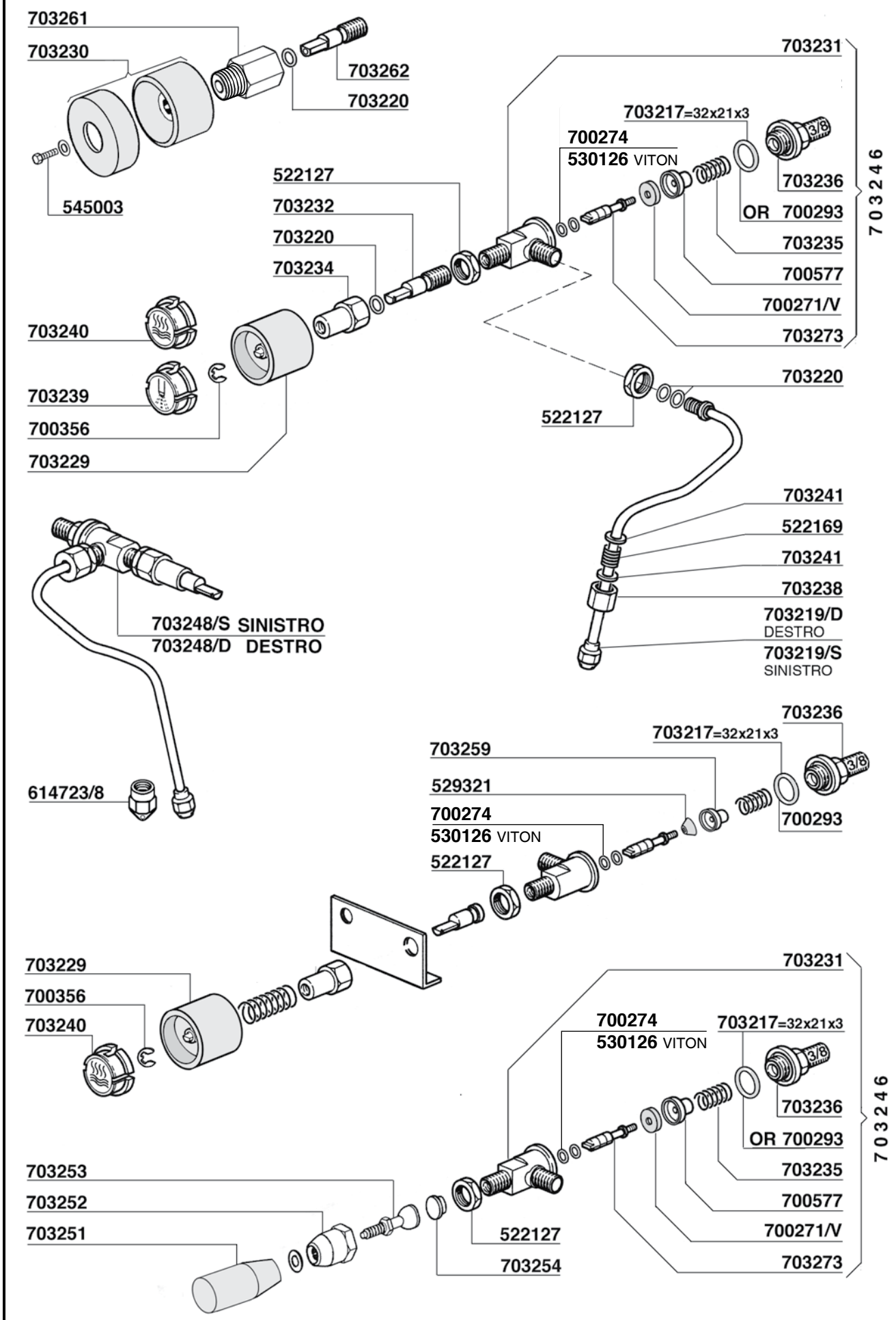

LA SPAZIALE

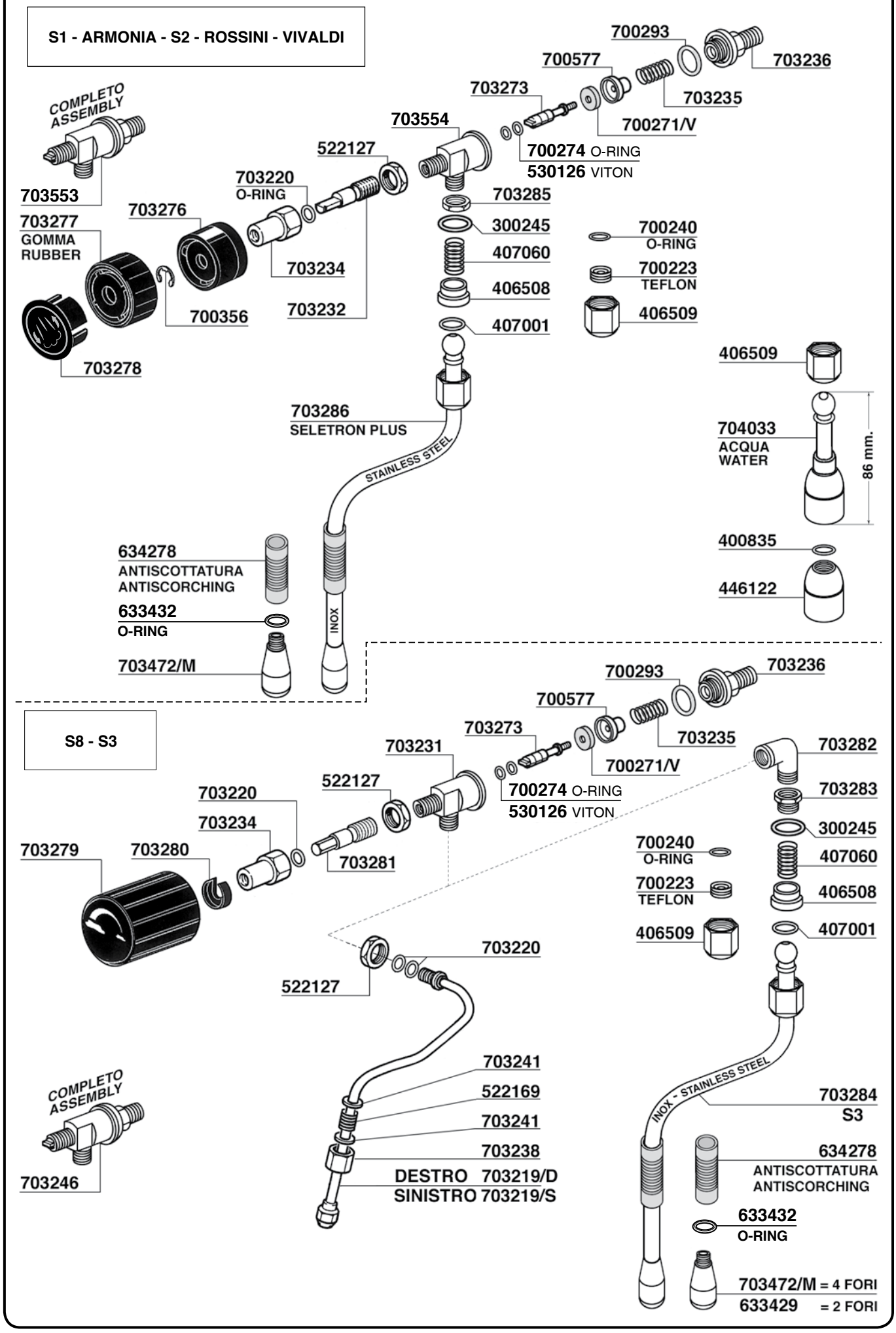
S1 - ARMONIA - S2 - ROSSINI - VIVALDI
COMPLETO ASSEMBLY
703553
703277
GOMMA
RUBBER
703278
703276
700356
703220
O-RING
703234
522127
703232
703554
703273
700293
700577
703236
703235
700271/V
700274 O-RING
530126 VITON
703285
300245
407060
406508
407001
700240
O-RING
700223
TEFLON
406509
406509
703286
SELETRON PLUS
STAINLESS STEEL
INOX
704033
ACQUA
WATER
86 mm.
400835
446122
634278
ANTISCOTTATURA
ANTISCORCHING
633432
O-RING
703472/M
S8 - S3
703279
703280
703220
703234
522127
703281
703231
703273
700293
700577
703236
703235
700271/V
700274 O-RING
530126 VITON
703282
703283
300245
407060
406508
407001
700240
O-RING
700223
TEFLON
406509
703220
522127
703241
522169
703241
703238
DESTRO 703219/D
SINISTRO 703219/S
COMPLETO ASSEMBLY
703246
INOX - STAINLESS STEEL
703284
S3
634278
ANTISCOTTATURA
ANTISCORCHING
633432
O-RING
703472/M = 4 FORI
633429 = 2 FORI

S1 MINI - VIVALDI

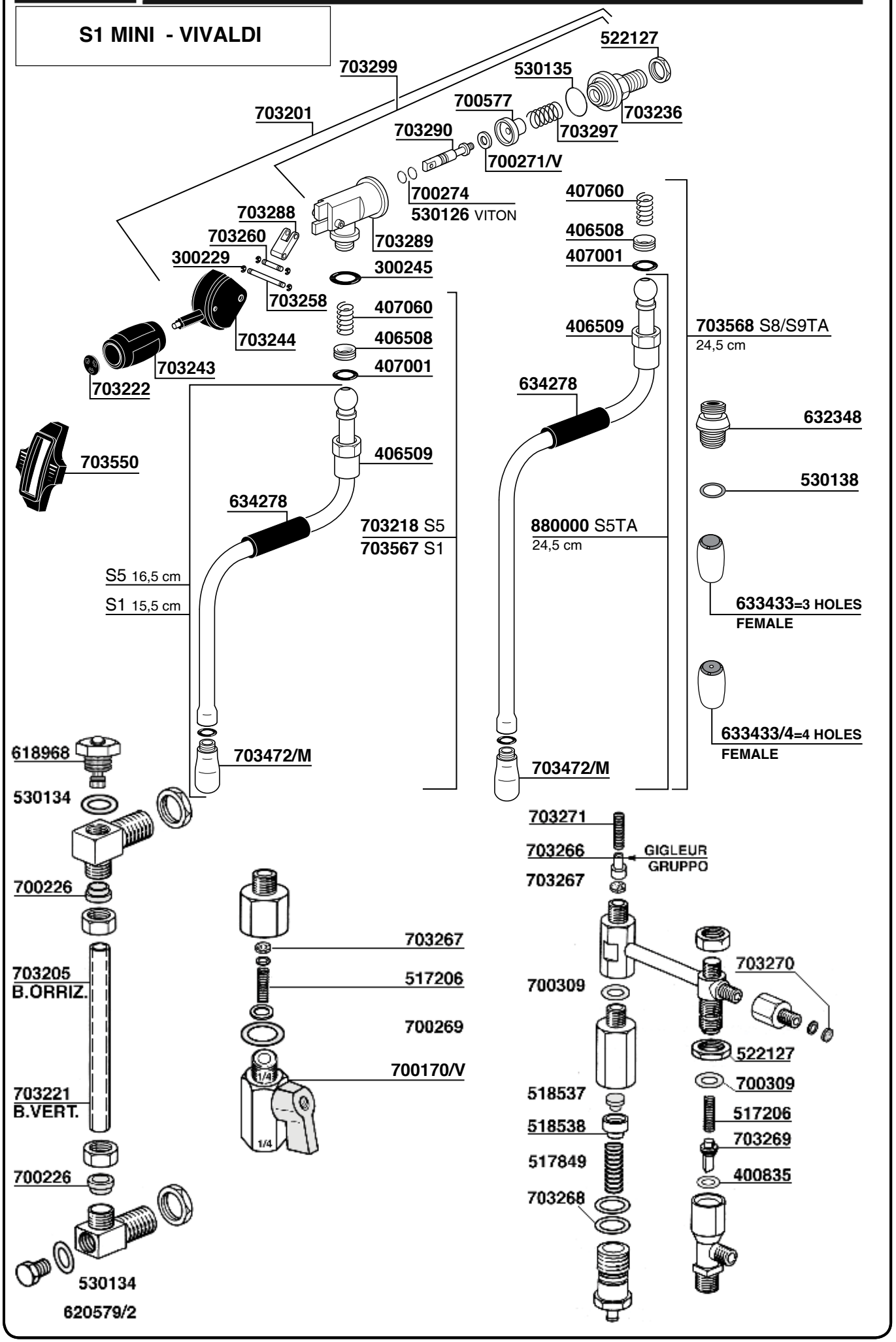

LA SPAZIALE

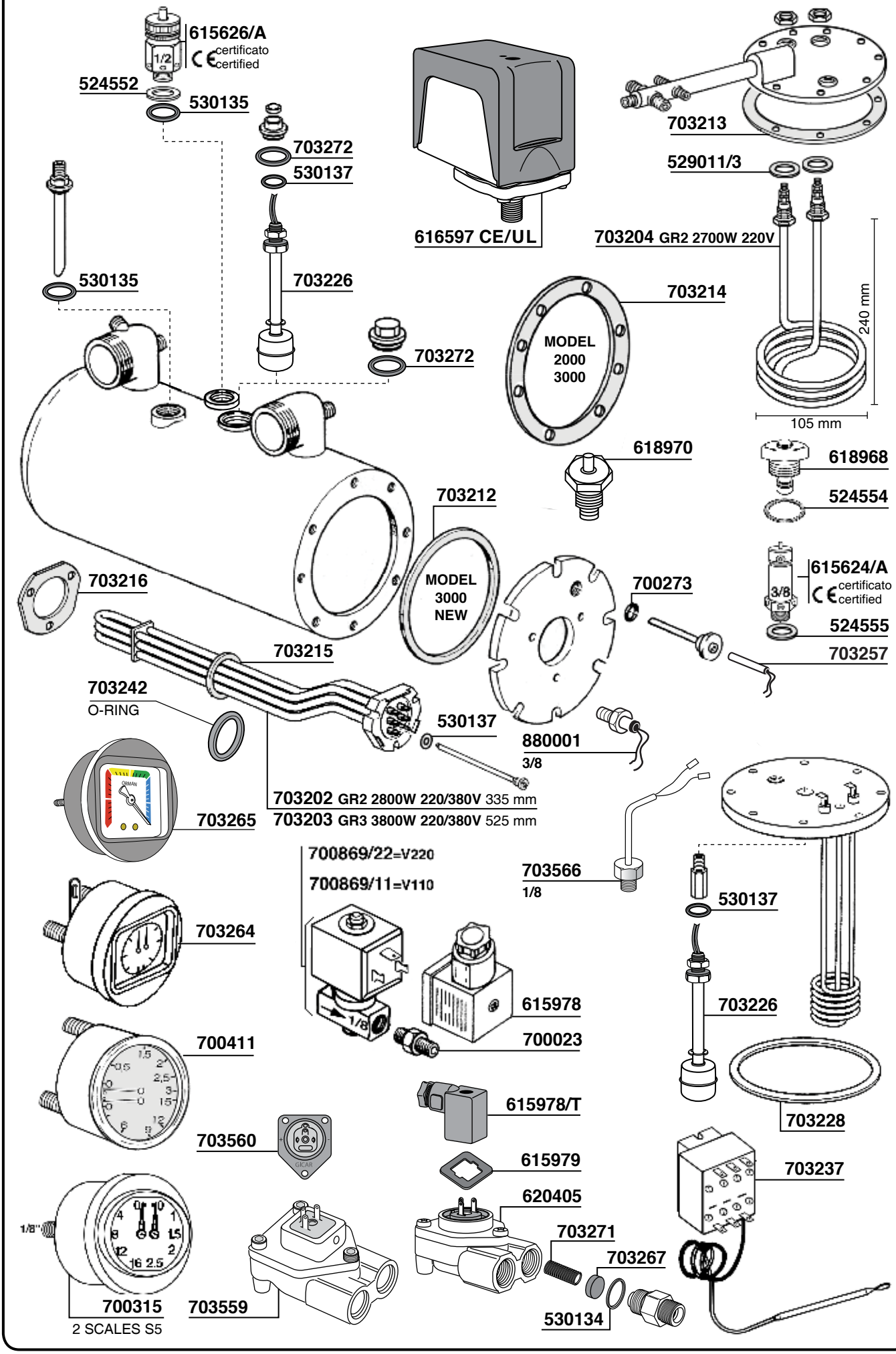
615626/A
certificato
certified
524552
530135
703272
530137
703226
530135
703272
616597 CE/UL
703213
529011/3
703204 GR2 2700W 220V
240 mm
105 mm
703214
MODEL
2000
3000
618970
618968
524554
703212
MODEL
3000
NEW
703216
700273
615624/A
certificato
certified
524555
703257
703215
703242
O-RING
530137
880001
3/8
703202 GR2 2800W 220/380V 335 mm
703203 GR3 3800W 220/380V 525 mm
703265
700869/22=V220
700869/11=V110
703566
1/8
530137
703264
615978
703226
700023
700411
615978/T
703228
703560
615979
703237
620405
703271
703267
530134
700315
2 SCALES S5
703559

LA SPAZIALE

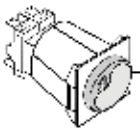

630381
NEW E.P.

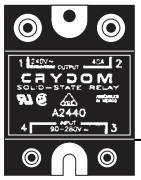

703296

703540
S3

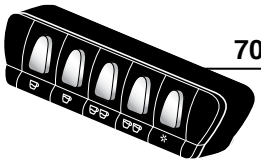

703543
S5

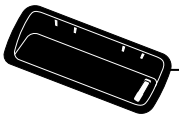

703577
S5

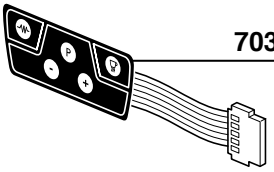

703544
S5

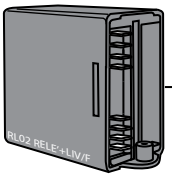

703287
NEW 300

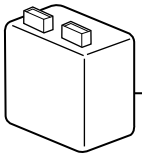

703293 1-2 GR 110V
NEW EK GR

703294 1-2 GR 230V
NEW EK GR

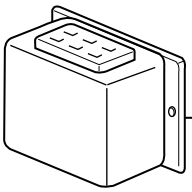

703295 3-4 GR 230V
NEW EK

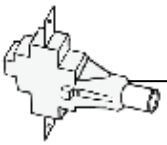

634027
3000 ELEKTRIC

703275
S3 E.P.

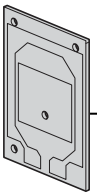

703541
S3

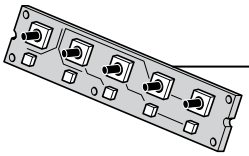

703545
S5

703546
S3 EK 2/3 GR

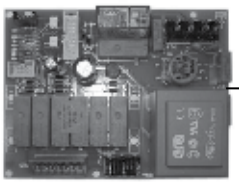

703547
S3 Seletron

703558
S5-S8-S9 2/3G

703563
VIVALDI

703557
S5-S8-S9
VERSIONE
COMPAK

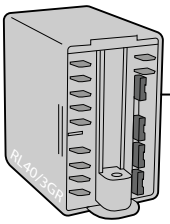

703575
S2-3GR 230V

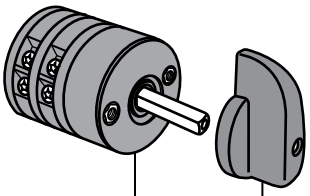

703247 **613656**

703292
NEW EK

703542
S5-S8-S9 Compact
S2 Special 2 GR

703576
S2 EK

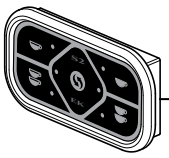

703548
S2 EK

703556
S8-S9

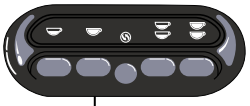

703555
S8 - S9

NUOVA SIMONELLI

AURELIA II S. - V - DIGIT

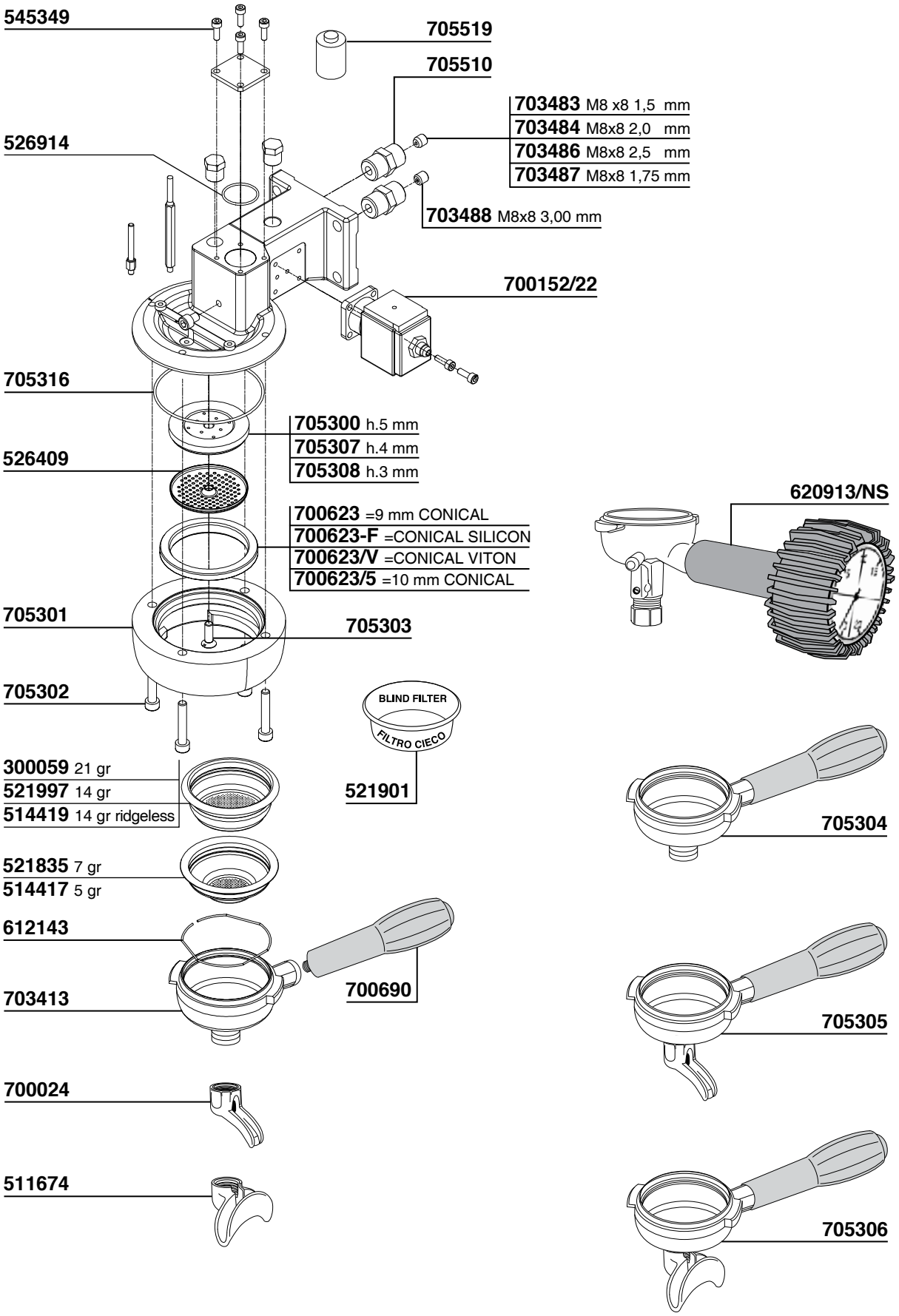

NUOVA SIMONELLI

Tav.02

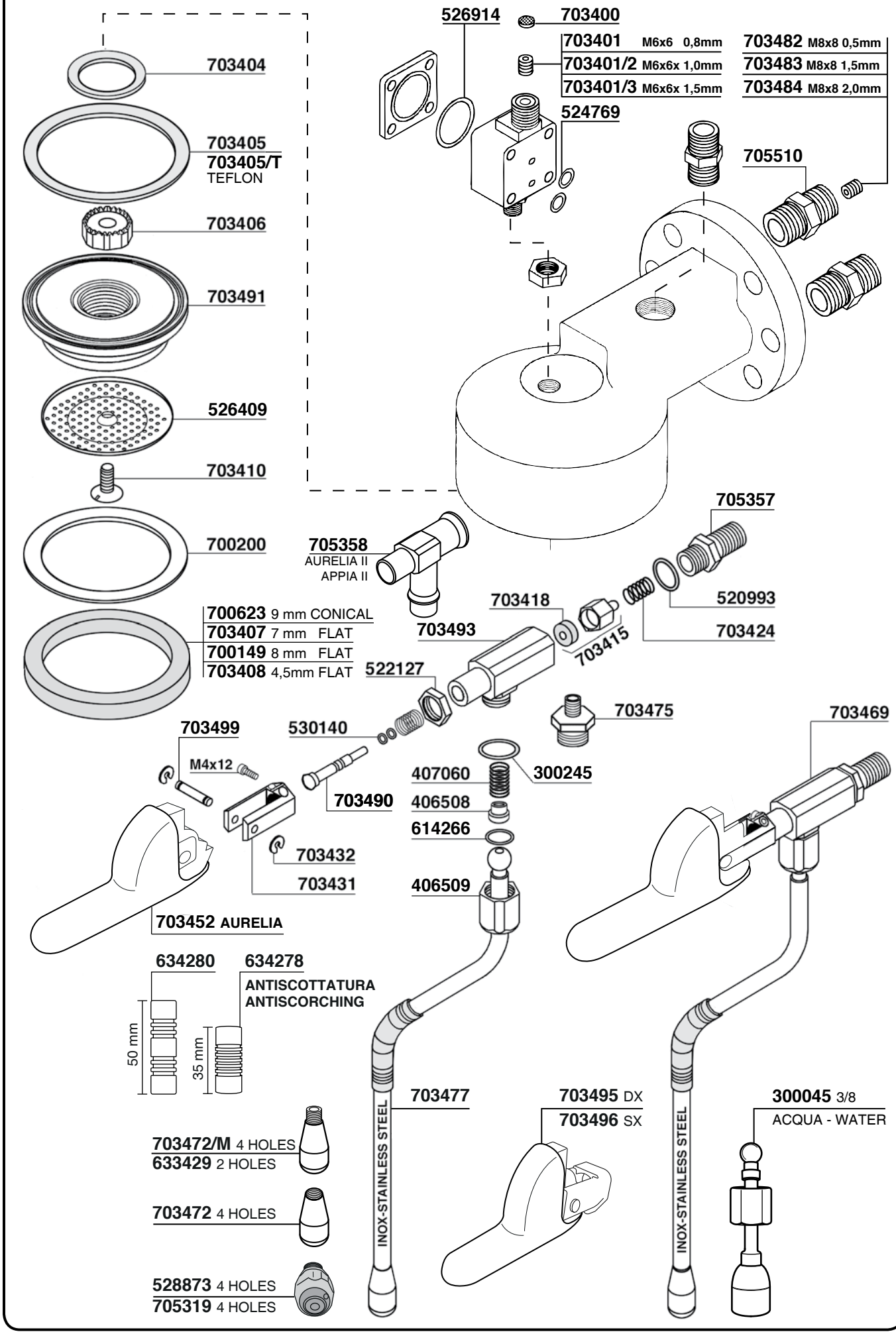

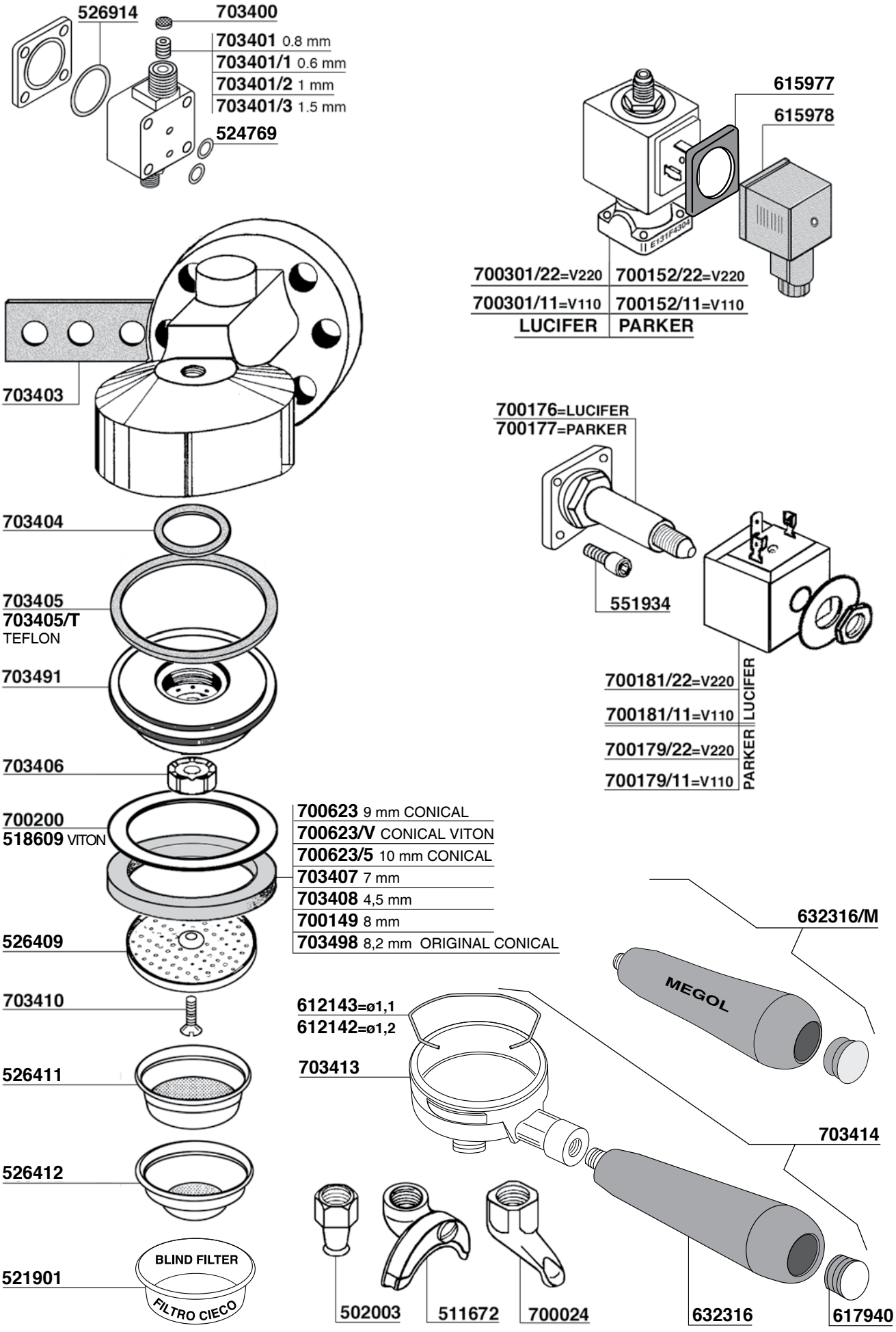
526914
703400
703401 0.8 mm
703401/1 0.6 mm
703401/2 1 mm
703401/3 1.5 mm
524769
615977
615978
E131F4304
700301/22=V220
700301/11=V110
LUCIFER
700152/22=V220
700152/11=V110
PARKER
703403
700176=LUCIFER
700177=PARKER
551934
703404
703405
703405/T
TEFLON
703491
700181/22=V220
700181/11=V110
LUCIFER
700179/22=V220
700179/11=V110
PARKER
703406
700200
518609 VITON
700623 9 mm CONICAL
700623/V CONICAL VITON
700623/5 10 mm CONICAL
703407 7 mm
703408 4,5 mm
700149 8 mm
703498 8,2 mm ORIGINAL CONICAL
526409
632316/M
MEGOL
703410
612143=ø1,1
612142=ø1,2
703413
526411
703414
526412
BLIND FILTER
521901
FILTRO CIECO
502003
511672
700024
632316
617940

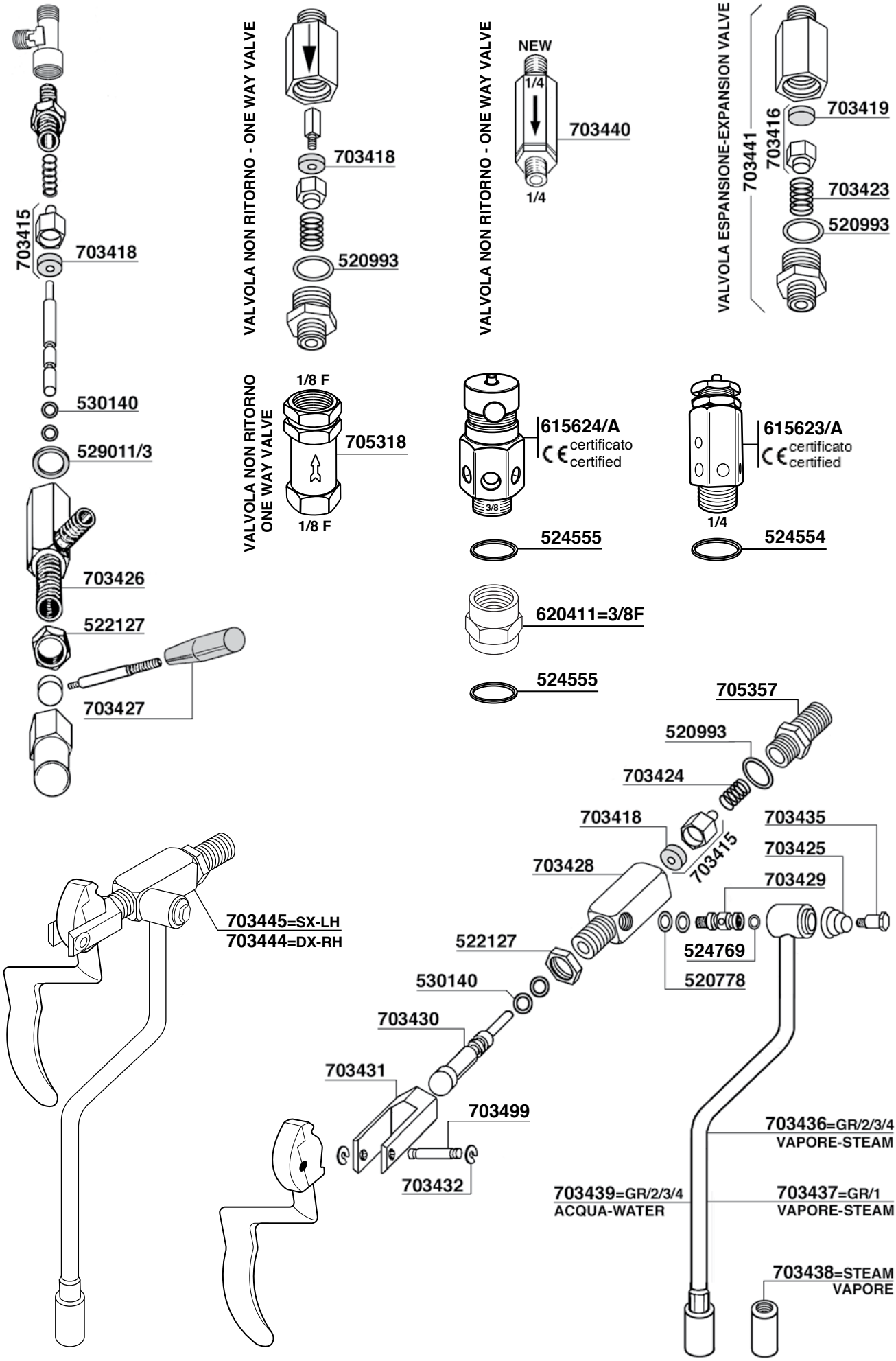
703415
703418
530140
529011/3
703426
522127
703427
VALVOLA NON RITORNO - ONE WAY VALVE
703418
520993
VALVOLA NON RITORNO - ONE WAY VALVE
NEW
1/4
703440
1/4
VALVOLA ESPANSIONE-EXPANSION VALVE
703441
703416
703419
703423
520993
VALVOLA NON RITORNO ONE WAY VALVE
1/8 F
705318
1/8 F
615624/A
certificato
certified
3/8
524555
615623/A
certificato
certified
1/4
524554
620411=3/8F
524555
705357
520993
703424
703418
703415
703435
703425
703429
703428
524769
520778
522127
530140
703430
703431
703499
703432
703445=SX-LH
703444=DX-RH
703436=GR/2/3/4
VAPORE-STEAM
703439=GR/2/3/4
ACQUA-WATER
703437=GR/1
VAPORE-STEAM
703438=STEAM
VAPORE

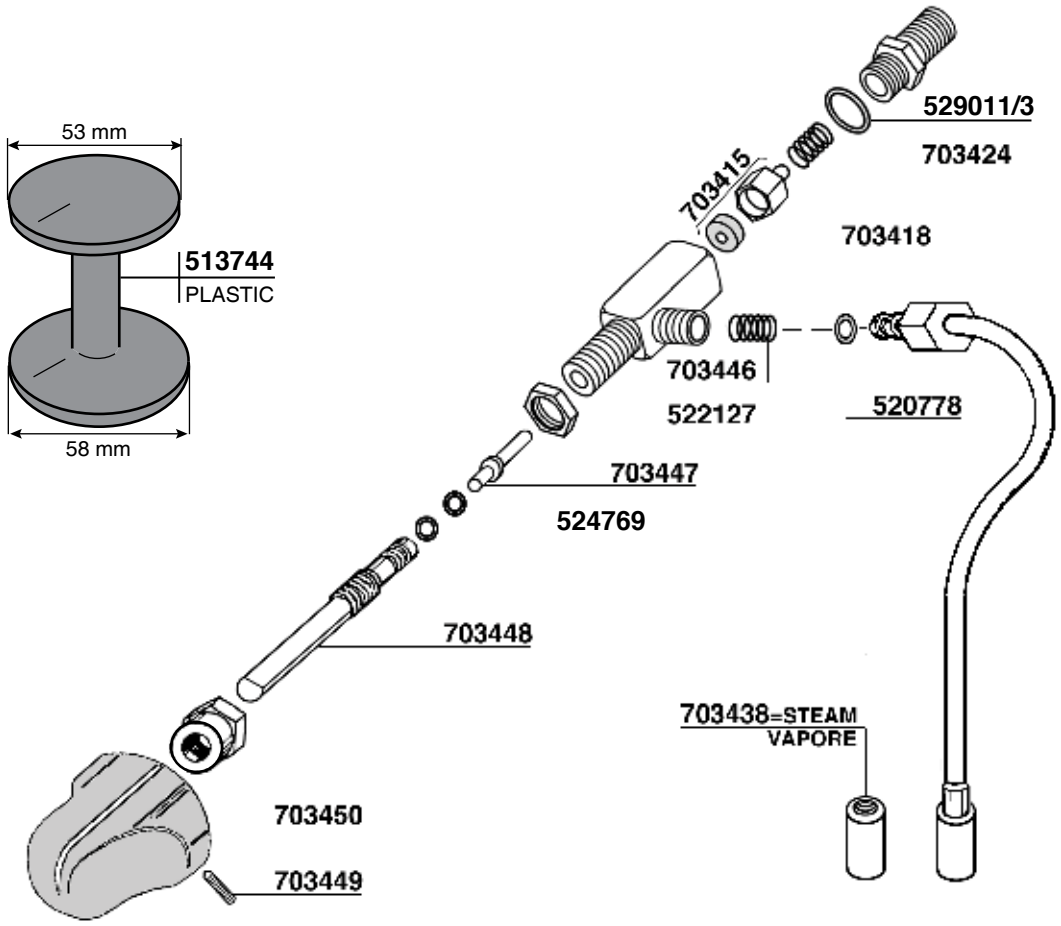
53 mm
513744
PLASTIC
58 mm
529011/3
703424
703415
703418
703446
522127
520778
703447
524769
703448
703438=STEAM
VAPORE
703450
703449

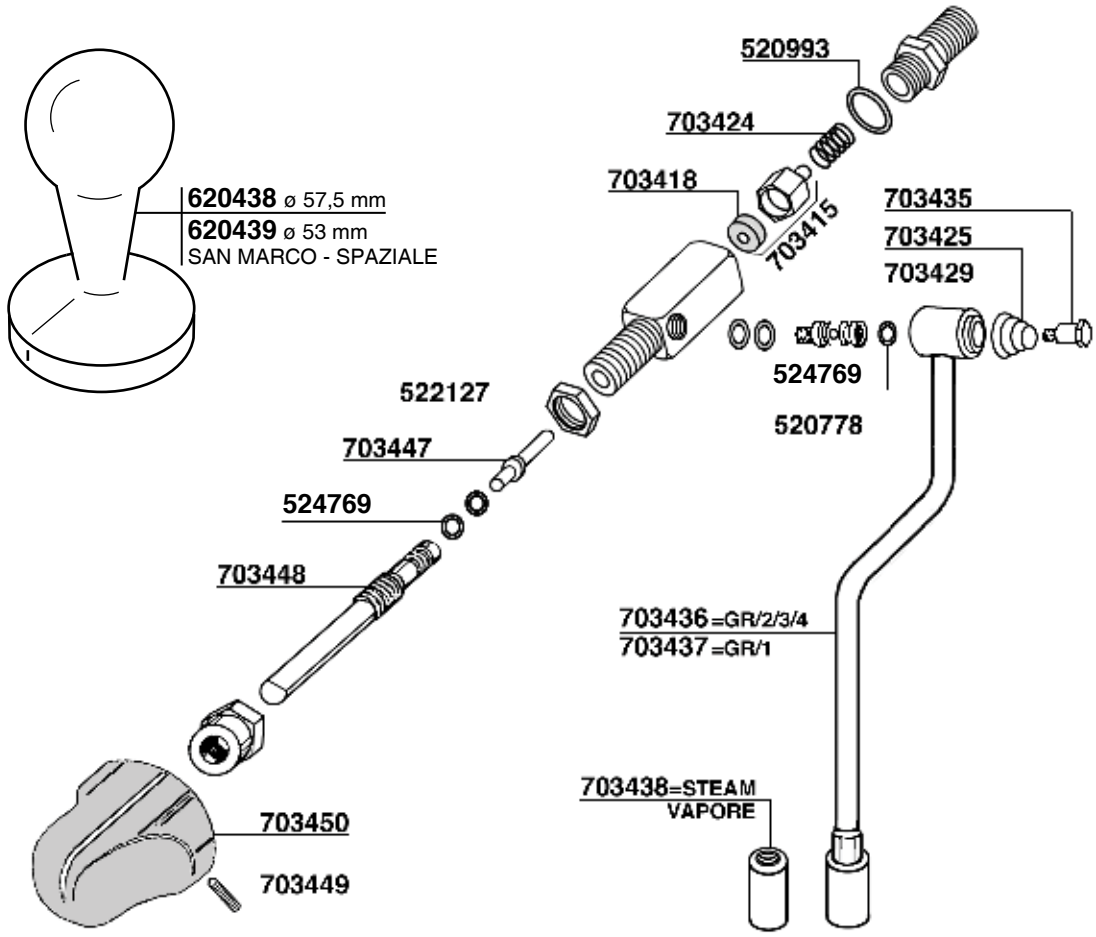
520993
703424
703418
620438 ø 57,5 mm
620439 ø 53 mm
SAN MARCO - SPAZIALE
703415
703435
703425
703429
524769
520778
522127
703447
524769
703448
703436=GR/2/3/4
703437=GR/1
703438=STEAM
VAPORE
703450
703449

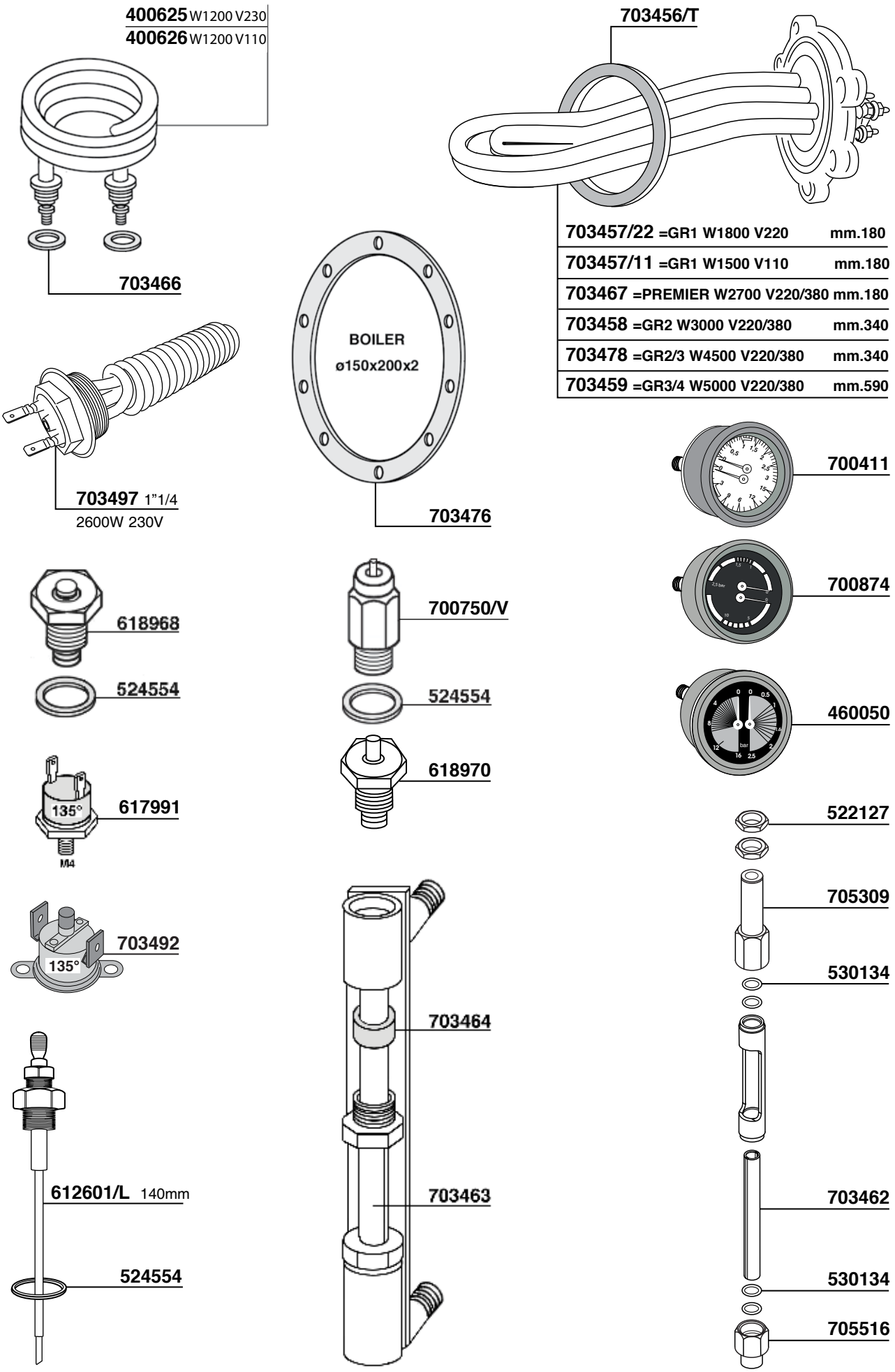

703457/22	=GR1 W1800 V220	mm.180
703457/11	=GR1 W1500 V110	mm.180
703467	=PREMIER W2700 V220/380	mm.180
703458	=GR2 W3000 V220/380	mm.340
703478	=GR2/3 W4500 V220/380	mm.340
703459	=GR3/4 W5000 V220/380	mm.590

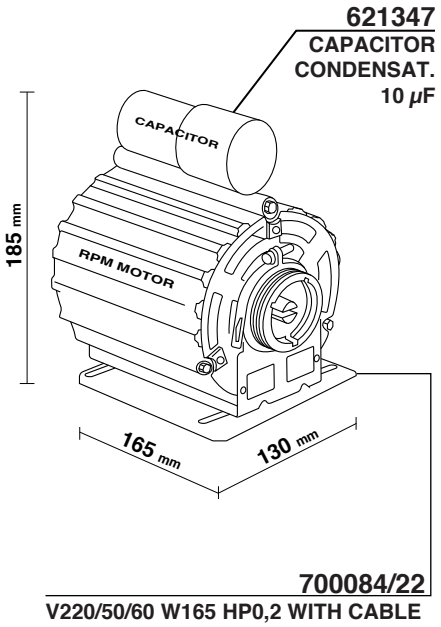

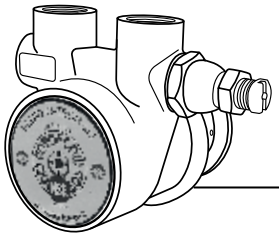

620406 150 Lt/h INOX-STAINLESS STEEL
620406/2 200 Lt/h

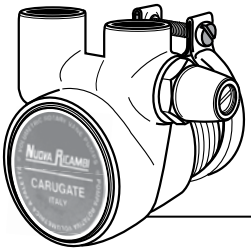

700048 100 Lt/h
700048/X 100 Lt/h INOX-STAINLESS STEEL
700048/2 200 Lt/h

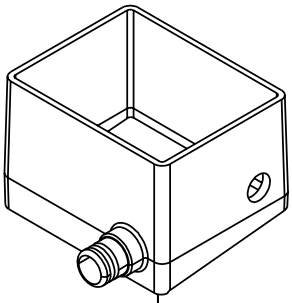

705321

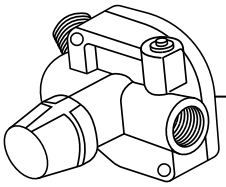

700464

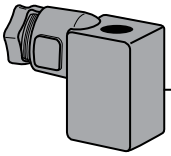

615978/T

632017/22=V220
632017/11=V110

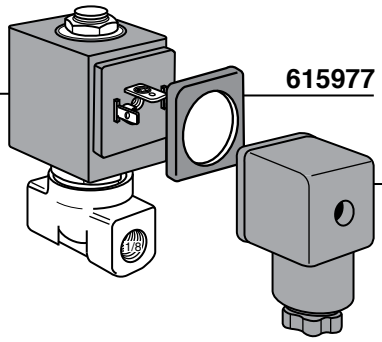

615977

615978

615979

530148

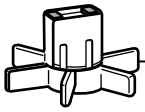

617903

551937

700621

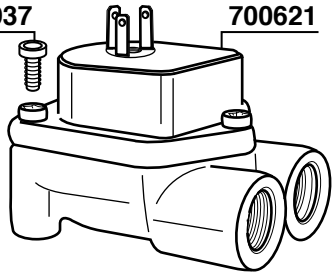

703485

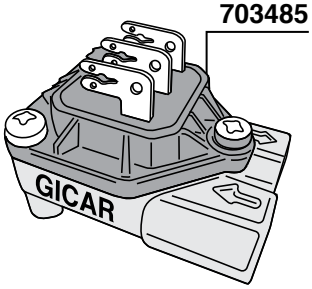

703480
1/4" - ø 1,2"

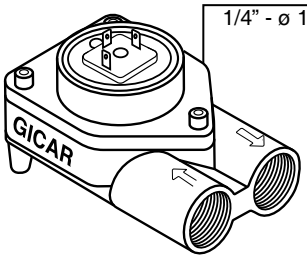

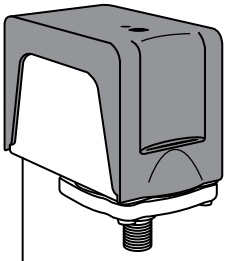

616597 CE/UL

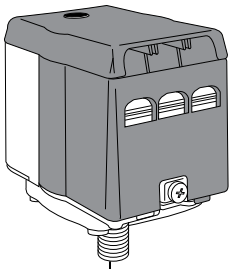

616592

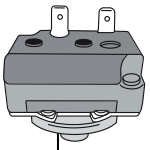

616589
CAMPINI TY85-B
1,4 BAR

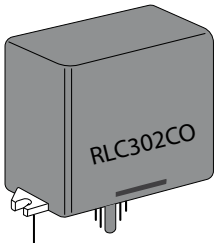

705313=V230

705320
OSCAR RL30/2S/3R 230V
GICAR CODE 9.1.40.61G

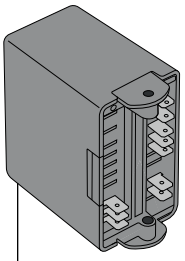

703494/11OSCAR
GICAR CODE 9.1.40.62G

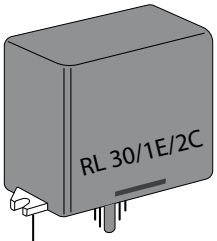

703468=V220
GICAR CODE 9.1.00.10G
703468/11=V110
GICAR CODE 9.1.00.19G

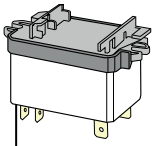

705322

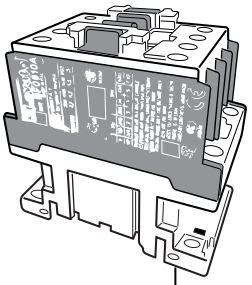

705314

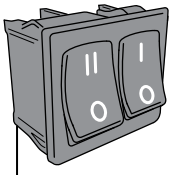

705312

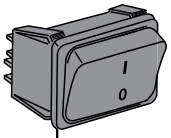

703453

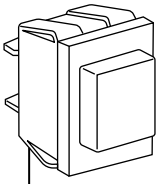

700180

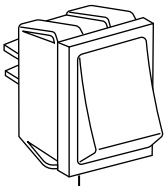

700429

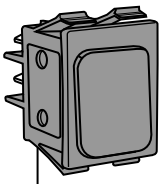

618014
RED LIGHT

611297

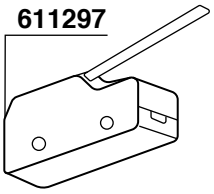

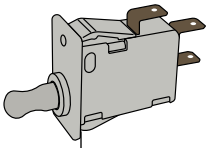

410151
3 POSIZIONI

703460=GR/2
703461=GR/3/4

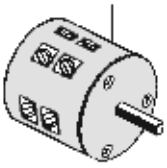

613656

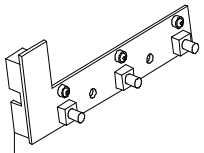

705323
APPIA 2/3 GR

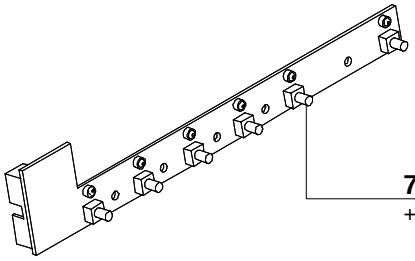

705326 APPIA 2GR
+ ACQUA CALDA

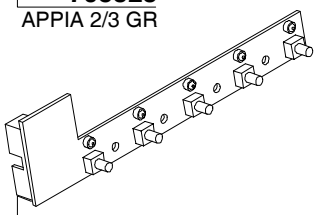

705324
APPIA 2/3 GR

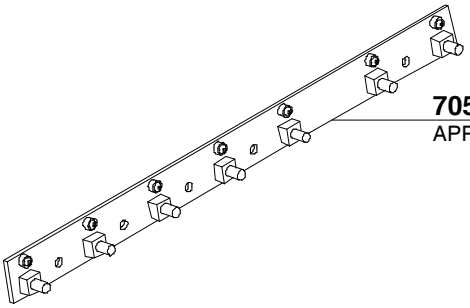

705327
APPIA 1 GR

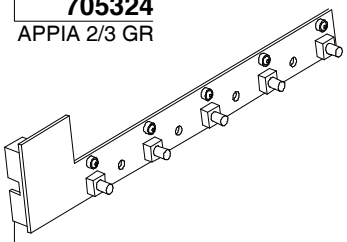

705325
APPIA 1 GR

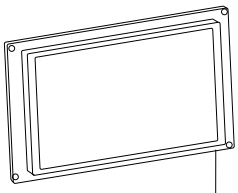

705342
DISPLAY LCD
GRAFICO 1GR
GICAR CODE 8.8.15.61G

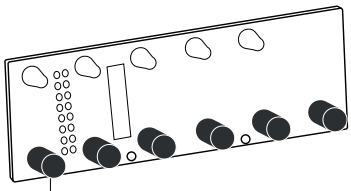

705335
PROGRAM VIP/PREMIER V

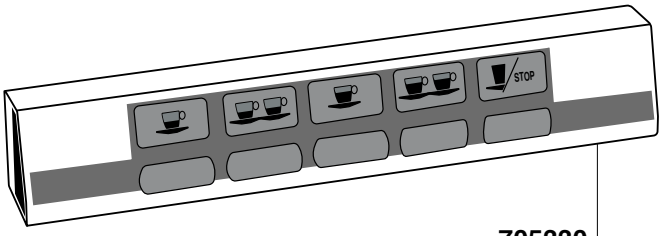

705330
AURELIA II VOL.

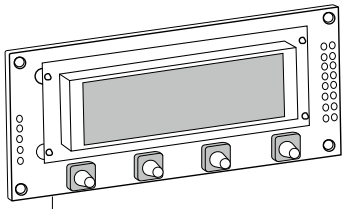

705343 AURELIA BLUE DISPLAY
705344 ADONIS WHITE DISPLAY

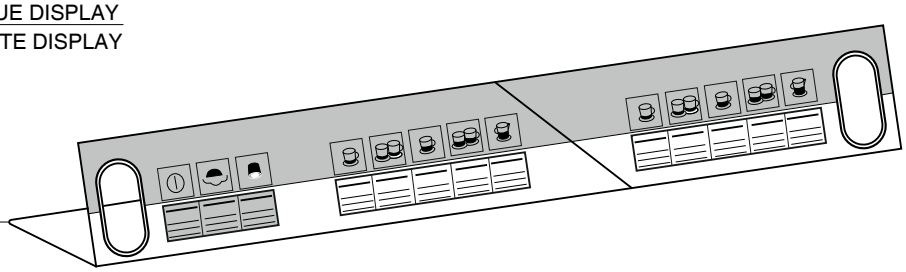

705328 APPIA 2GR

705329 APPIA 3GR

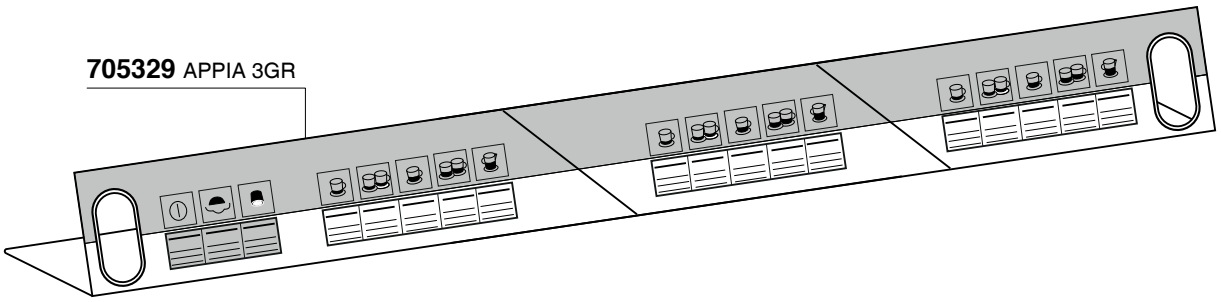

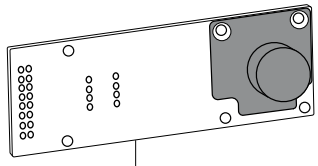

705331
G/S

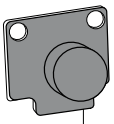

705341
G/S AURELIA

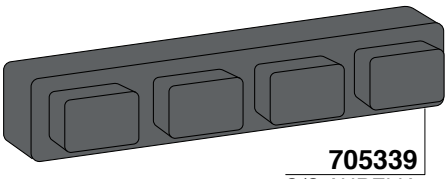

705339
G/S AURELIA

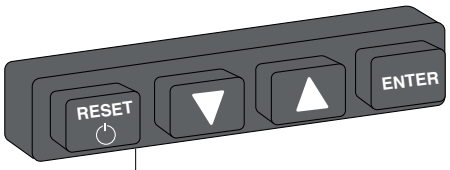

705338
G/S AURELIA

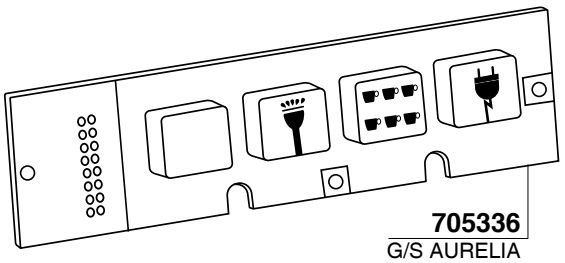

705336
G/S AURELIA

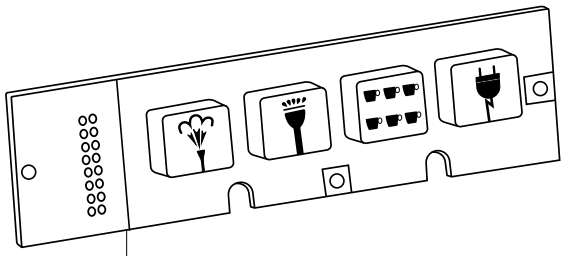

705340
G/S AURELIA

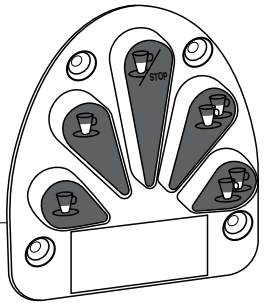

705345
ADONIS

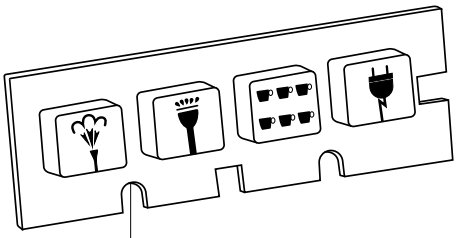

705337
G/S AURELIA

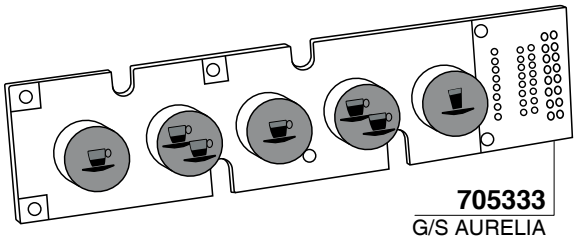

705333
G/S AURELIA

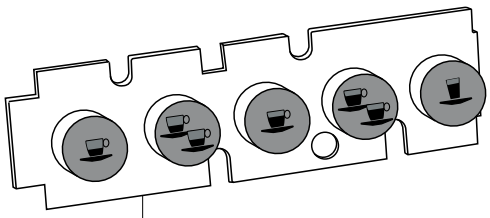

705334
G/S AURELIA

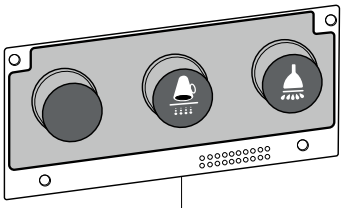

705332
ADONIS

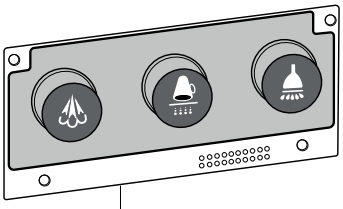

705346
ADONIS

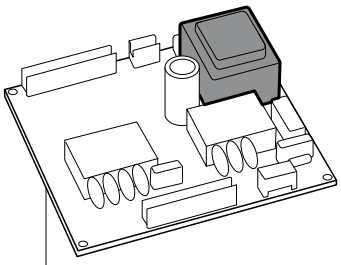

705347
AURELIA VIP 2GR

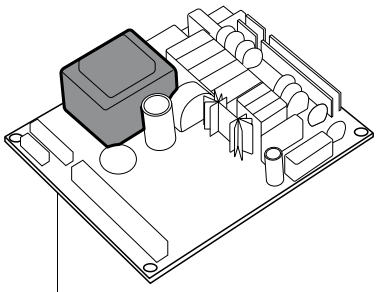

705348
AURELIA PLUS 3/4GR

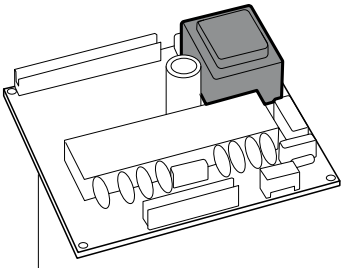

705350 AURELIA V 3/4GR
705311 AURELIA II "V" 3/4GR

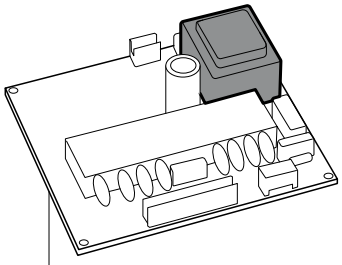

705351 AURELIA S 3/4GR
705310 AURELIA II "S" 3/4GR

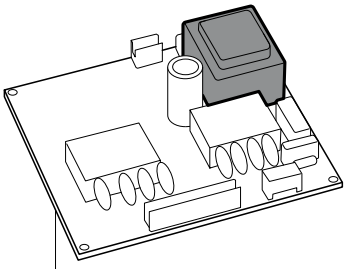

705352
AURELIA S 2GR

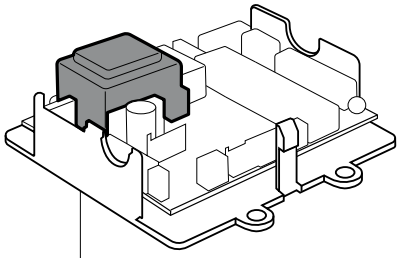

705353
AURELIA II/COMPACT
1/2/3 GR 230V

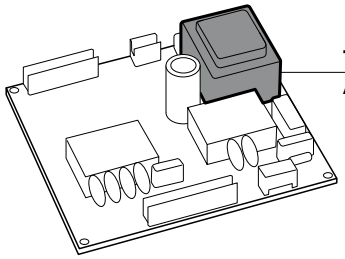

705356
AURELIA II V 2GR

705317
2GR APPIA-APPIA II
VOLUMETRIC 230V

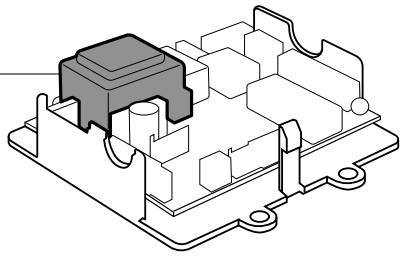

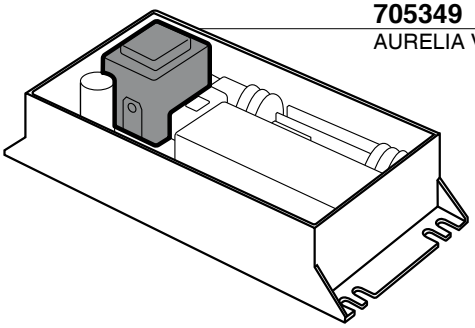

705349
AURELIA V 2GR

705315
2GR APPIA COMP.
APPIA II COMP. 230V

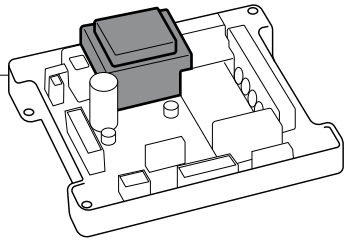

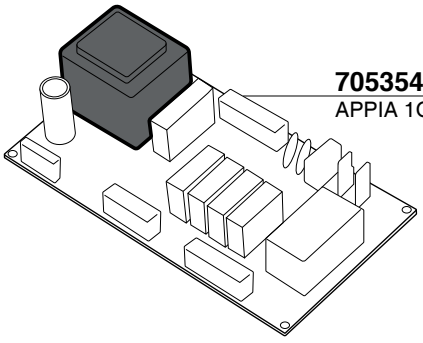

705354
APPIA 1GR 230V 50/60 Hz

705355
MUSICA 230V

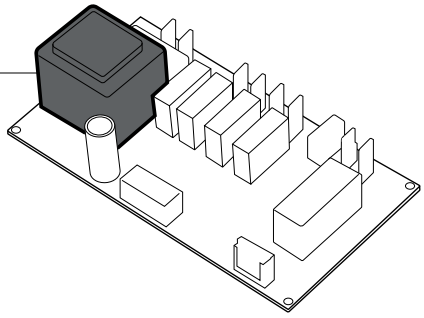

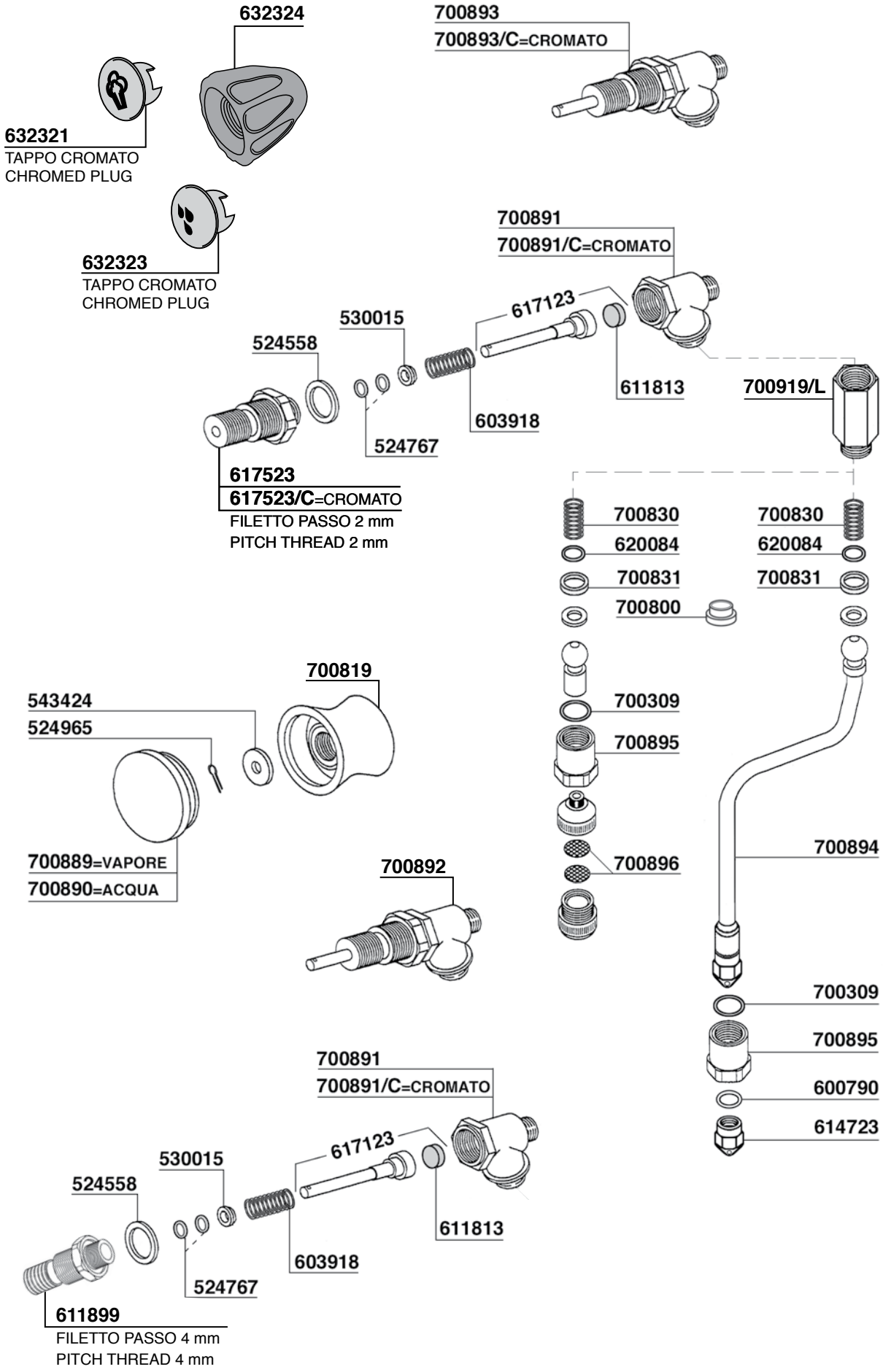
632324
700893
700893/C=CROMATO
632321
TAPPO CROMATO
CHROMED PLUG
632323
TAPPO CROMATO
CHROMED PLUG
700891
700891/C=CROMATO
617123
530015
524558
611813
700919/L
603918
524767
617523
617523/C=CROMATO
FILETTO PASSO 2 mm
PITCH THREAD 2 mm
700830
620084
700831
700800
700830
620084
700831
700819
543424
524965
700309
700895
700889=VAPORE
700890=ACQUA
700892
700896
700894
700309
700895
600790
614723
700891
700891/C=CROMATO
617123
530015
524558
611813
603918
524767
611899
FILETTO PASSO 4 mm
PITCH THREAD 4 mm

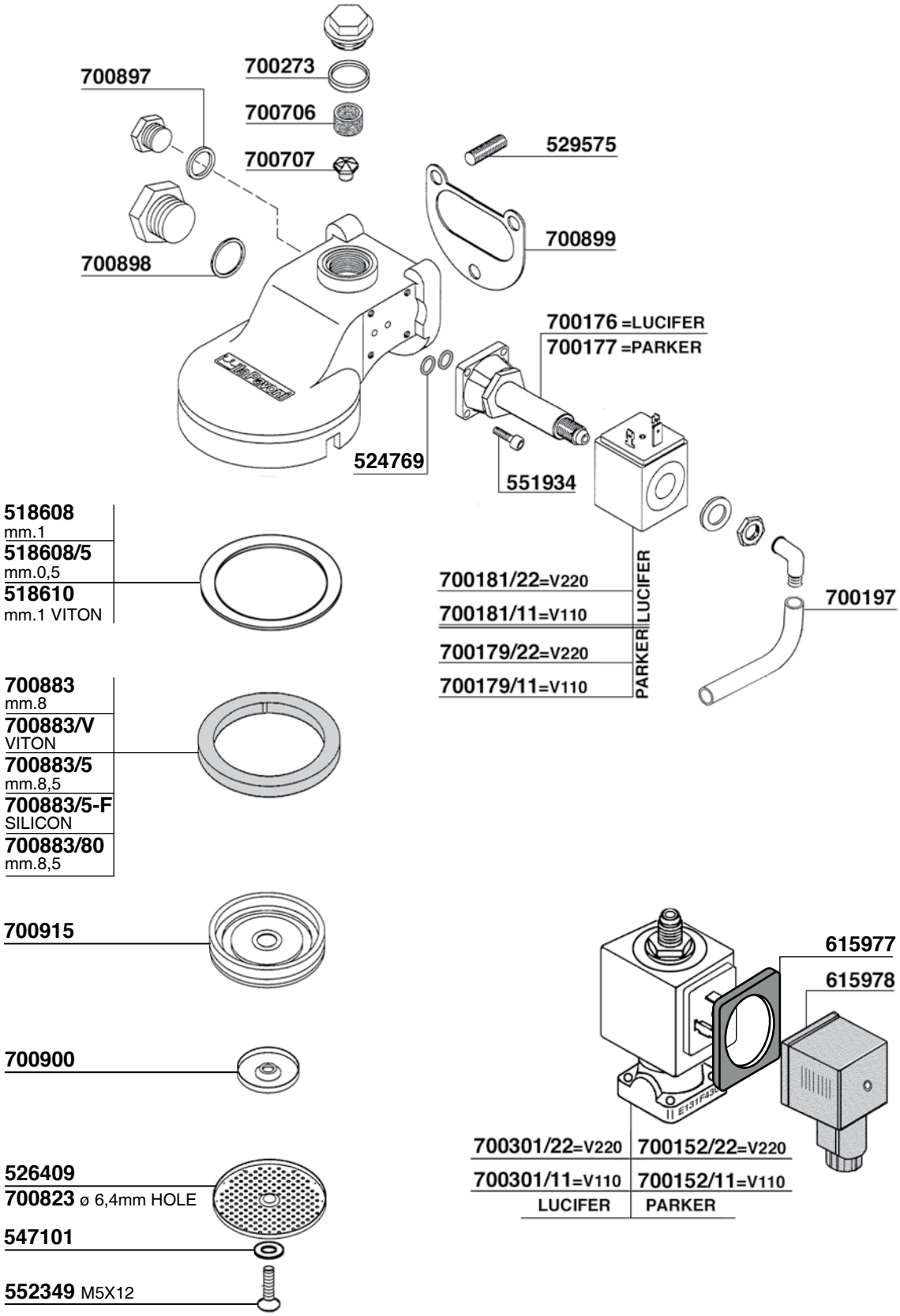
700897
700273
700706
700707
529575
700899
700898
700176 =LUCIFER
700177 =PARKER
524769
551934
518608
mm.1
518608/5
mm.0,5
518610
mm.1 VITON
700181/22=V220
700181/11=V110
700179/22=V220
700179/11=V110
LUCIFER
PARKER
700197
700883
mm.8
700883/V
VITON
700883/5
mm.8,5
700883/5-F
SILICON
700883/80
mm.8,5
700915
615977
615978
700900
700301/22=V220
700301/11=V110
LUCIFER
700152/22=V220
700152/11=V110
PARKER
526409
700823 ø 6,4mm HOLE
547101
552349 M5X12

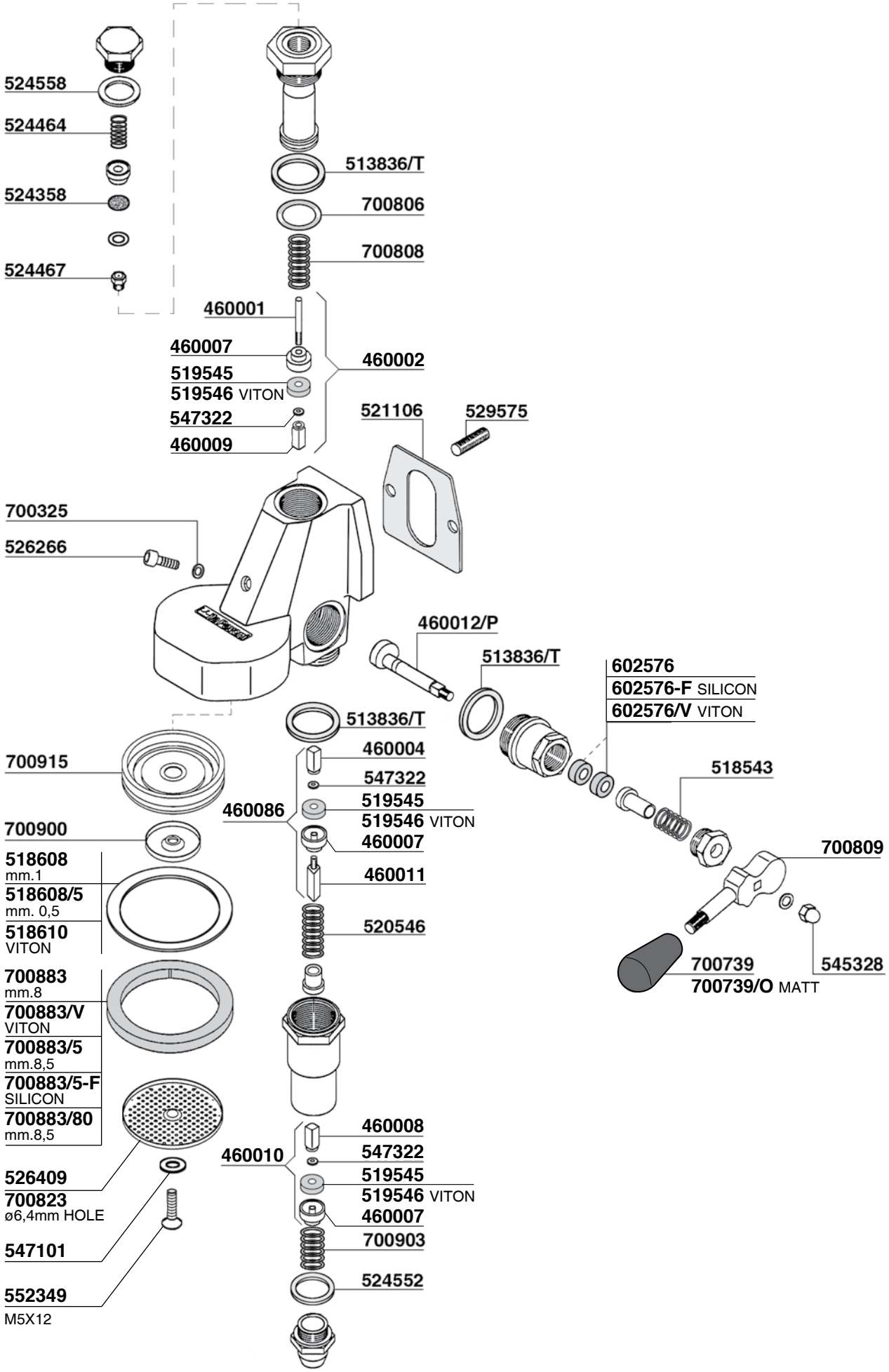
524558
524464
524358
524467
513836/T
700806
700808
460001
460007
519545
519546 VITON
547322
460009
460002
521106
529575
700325
526266
460012/P
513836/T
602576
602576-F SILICON
602576/V VITON
513836/T
460004
547322
519545
519546 VITON
460007
460011
520546
460086
700915
700900
518608
mm.1
518608/5
mm. 0,5
518610
VITON
700883
mm.8
700883/V
VITON
700883/5
mm.8,5
700883/5-F
SILICON
700883/80
mm.8,5
526409
700823
ø6,4mm HOLE
547101
552349
M5X12
518543
700809
700739
700739/O MATT
545328
460008
547322
519545
519546 VITON
460007
700903
524552
460010

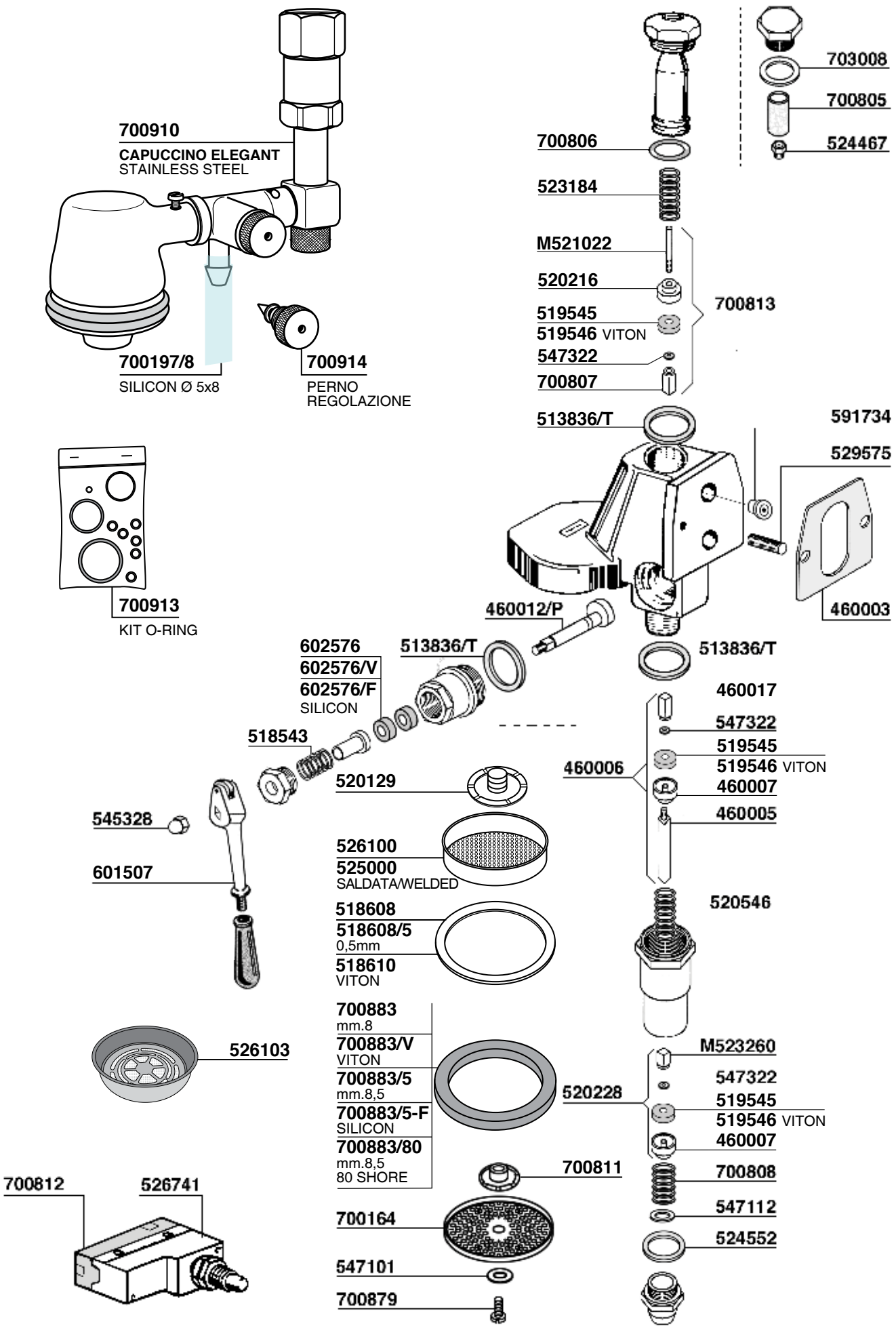
700910
CAPUCCINO ELEGANT
STAINLESS STEEL
700197/8
SILICON Ø 5x8
700914
PERNO
REGOLAZIONE
700913
KIT O-RING
703008
700805
524467
700806
523184
M521022
520216
519545
519546 VITON
547322
700807
700813
513836/T
591734
529575
460003
460012/P
513836/T
602576
602576/V
602576/F
SILICON
513836/T
518543
520129
545328
601507
526100
525000
SALDATA/WELDED
518608
518608/5
0,5mm
518610
VITON
526103
700883
mm.8
700883/V
VITON
700883/5
mm.8,5
700883/5-F
SILICON
700883/80
mm.8,5
80 SHORE
700812
526741
700164
547101
700879
700811
460017
547322
519545
519546 VITON
460007
460005
460006
520546
M523260
547322
519545
519546 VITON
460007
520228
700808
547112
524552

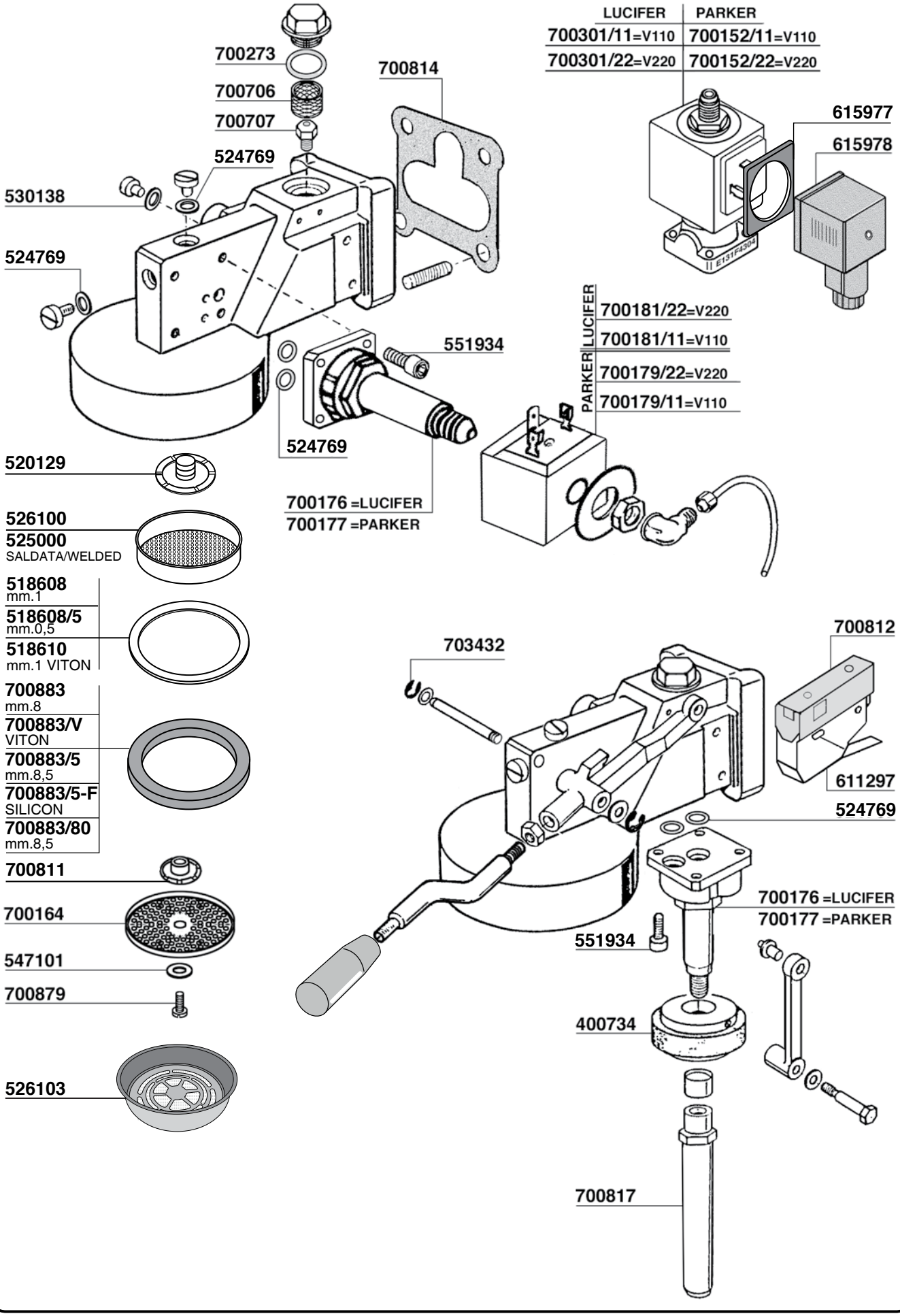
LUCIFER
PARKER
700301/11=V110
700152/11=V110
700301/22=V220
700152/22=V220
700273
700706
700707
700814
524769
530138
524769
615977
615978
E131F4304
551934
524769
700181/22=V220
700181/11=V110
700179/22=V220
700179/11=V110
LUCIFER
PARKER
520129
700176 =LUCIFER
700177 =PARKER
526100
525000
SALDATA/WELDED
518608
mm.1
518608/5
mm.0,5
518610
mm.1 VITON
700883
mm.8
700883/V
VITON
700883/5
mm.8,5
700883/5-F
SILICON
700883/80
mm.8,5
700811
700164
547101
700879
526103
703432
700812
611297
524769
700176 =LUCIFER
700177 =PARKER
551934
400734
700817

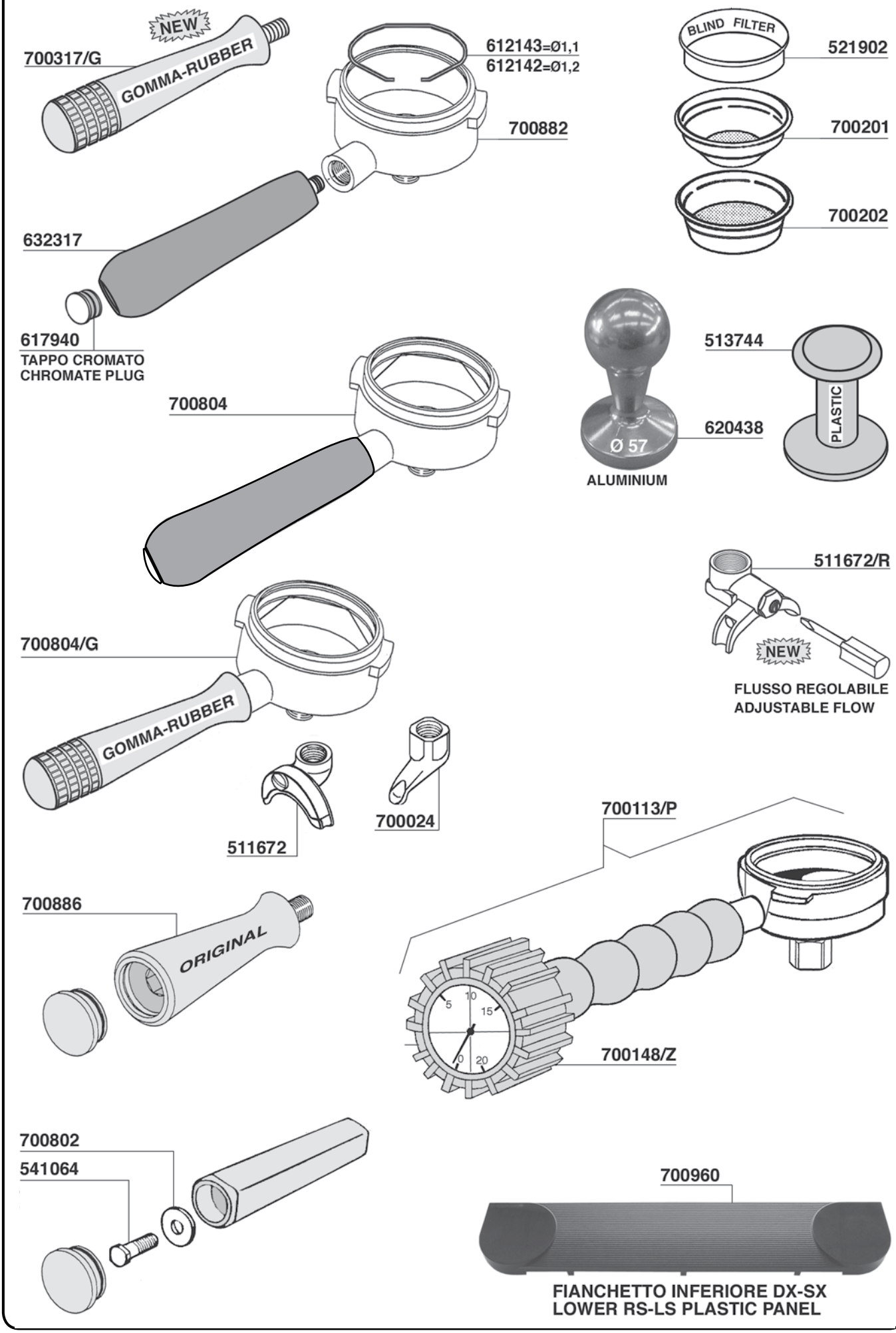
NEW
700317/G
GOMMA-RUBBER
612143=Ø1,1
612142=Ø1,2
700882
BLIND FILTER
521902
700201
700202
632317
617940
TAPPO CROMATO
CHROMATE PLUG
700804
513744
PLASTIC
620438
Ø 57
ALUMINIUM
511672/R
NEW
FLUSSO REGOLABILE
ADJUSTABLE FLOW
700804/G
GOMMA-RUBBER
511672
700024
700113/P
700886
ORIGINAL
700148/Z
700802
541064
700960
FIANCHETTO INFERIORE DX-SX
LOWER RS-LS PLASTIC PANEL

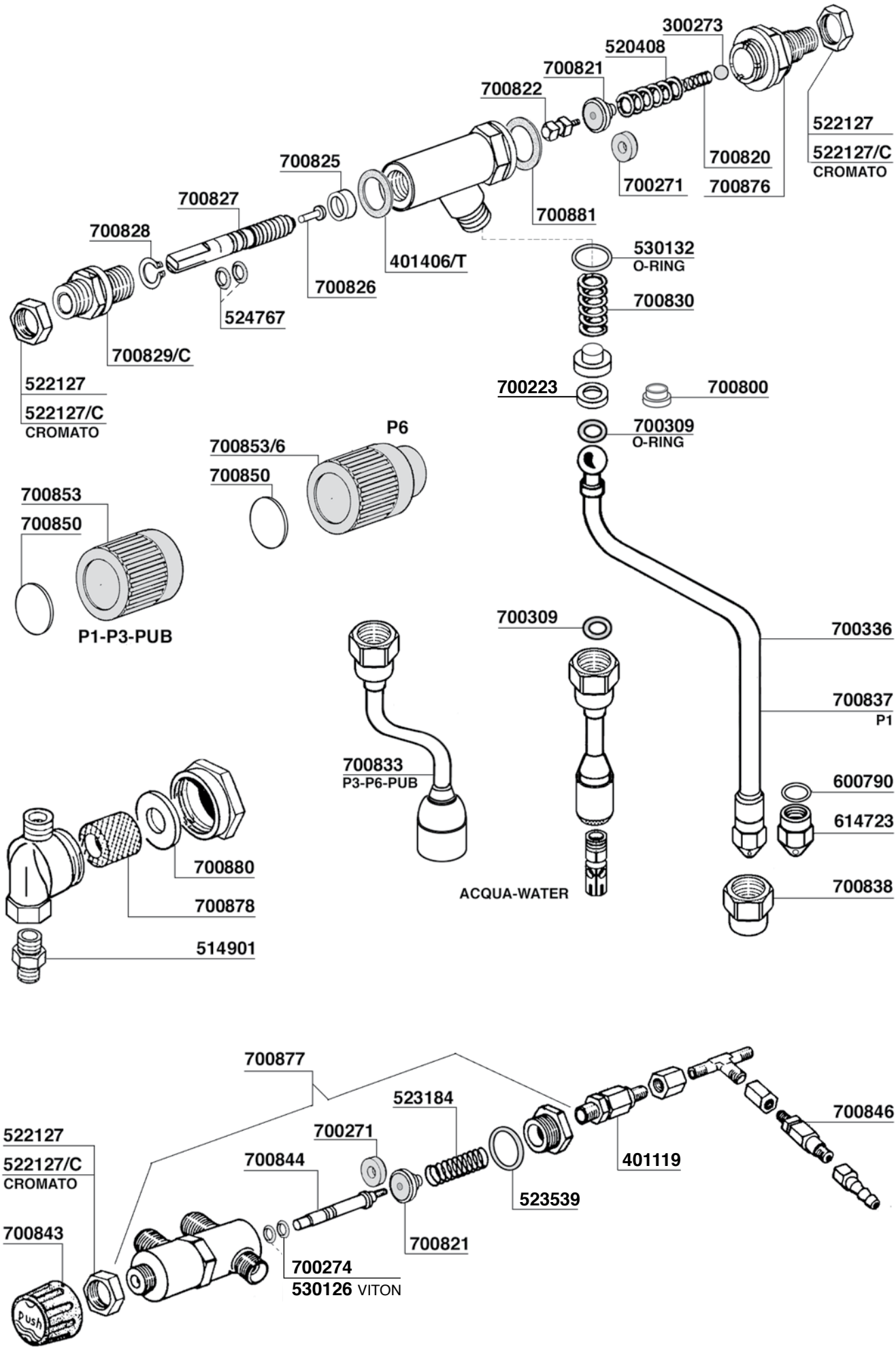
300273
520408
700821
700822
522127
522127/C
CROMATO
700820
700876
700271
700825
700827
700828
700881
530132
O-RING
401406/T
700826
700830
524767
700829/C
522127
522127/C
CROMATO
700223
700800
700309
O-RING
P6
700853/6
700850
700853
700850
P1-P3-PUB
700309
700336
700837
P1
700833
P3-P6-PUB
600790
614723
700880
700878
ACQUA-WATER
700838
514901
700877
523184
700846
522127
522127/C
CROMATO
700271
700844
401119
523539
700843
700821
700274
530126 VITON
Push

700856

700907

Ø184x170mm

400826/T

700858/22=W1500 V220 mm.140

700858/11=W1500 V110 mm.140

700860/22=GR/2 W1300 V220

700863

700874

700861=GR/1/2 W3000 V220/380

700861/11=GR/1/2 W2000 V110

700862=GR/2/3 W4000 V220/380

700862/11=GR/2/3 W3000 V110

700863

700875

400826/T

700887 = 4500W 230/400V mm.290

700888 = GR2 3000W 230 mm.230

700884

615623

1/4

615624/A

certificato
certified

3/8

524555

700869/22=V220

700869/11=V110

PARKER

1/8

1/8

615978

ACQUA CALDA

701801

M12x1

701804

700857

M22

700898

551937

530143

617903/G

615978/T

615979

620404

GICAR

700253/22=V220

700253/11=V110

615978/P

AUTOLIVELLO

612601 120mm

524554

700737 =V220

700737/11=V110

GICAR

RL 30/1 E-2CF

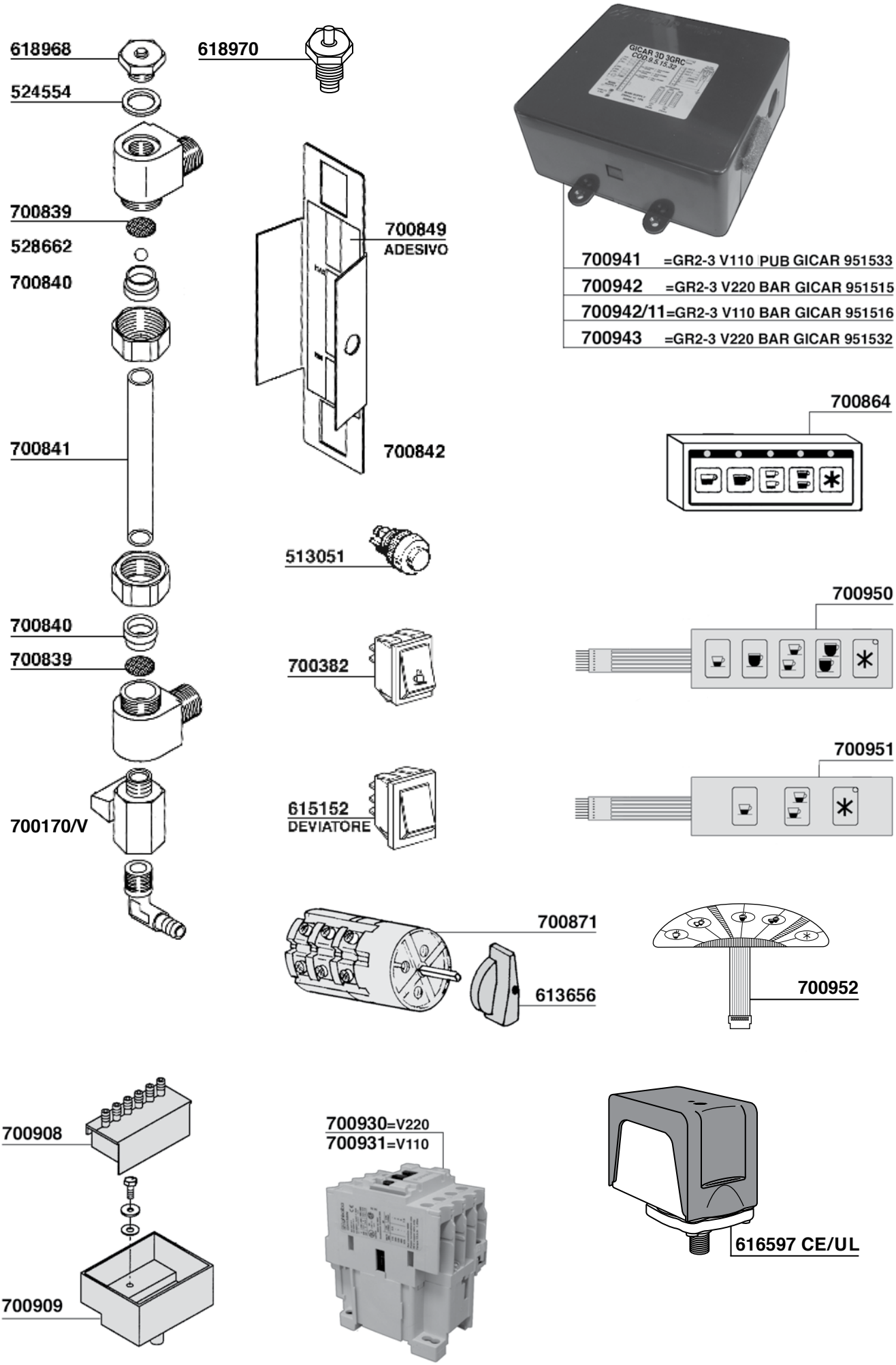
618968
618970
524554
700839
528662
700840
700841
700840
700839
700170/V
700849
ADESIVO
700842
513051
700382
615152
DEVIATORE
GICAR 3D 3GRC
700941 =GR2-3 V110 PUB GICAR 951533
700942 =GR2-3 V220 BAR GICAR 951515
700942/11=GR2-3 V110 BAR GICAR 951516
700943 =GR2-3 V220 BAR GICAR 951532
700864
700950
700951
700871
613656
700952
700908
700909
700930=V220
700931=V110
616597 CE/UL

PAVONI

EUROPICCOLA - PROFESSIONAL

MODELLO CROMATO - CHROMED MODEL

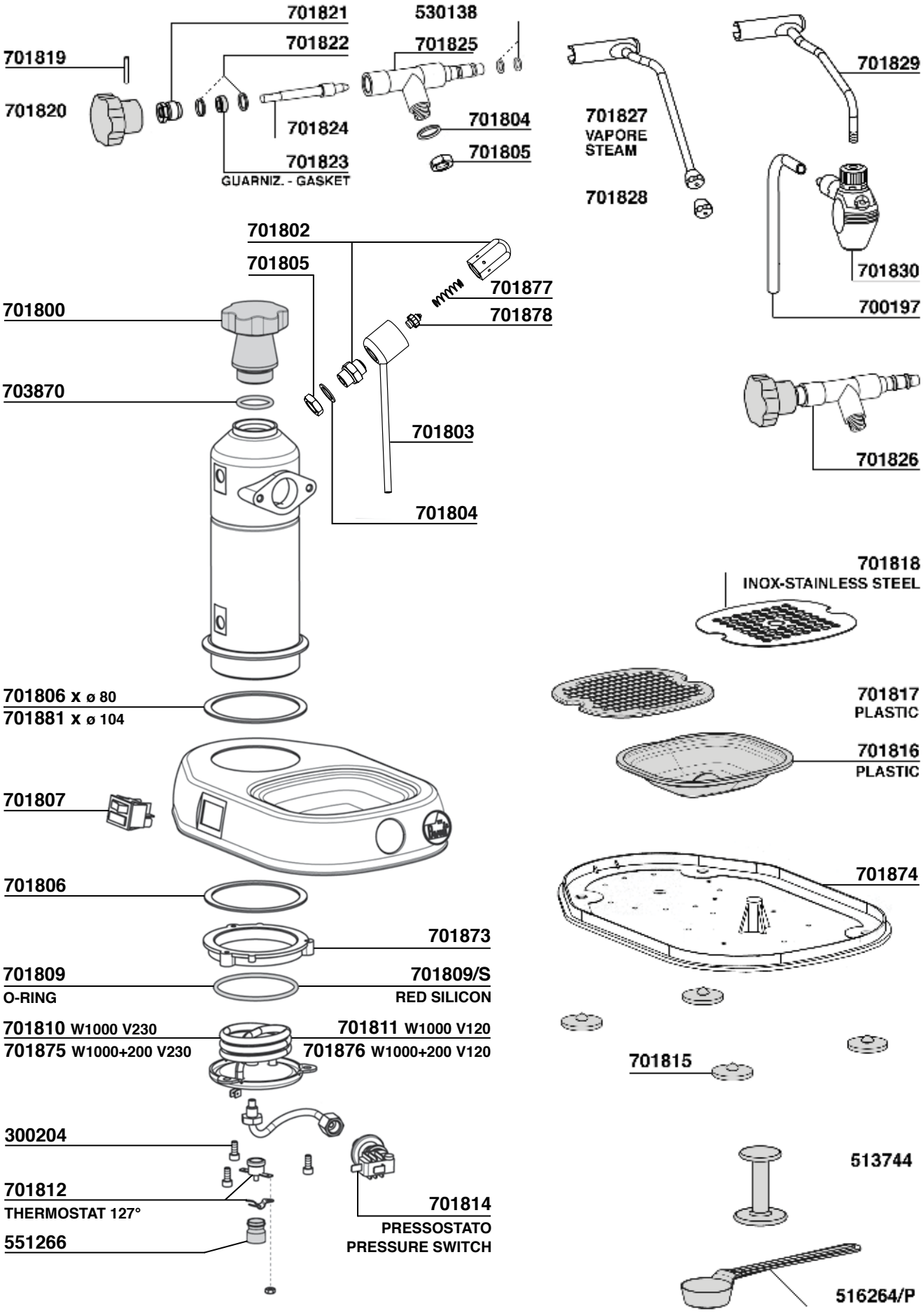

PAVONI

EUROPICCOLA - PROFESSIONAL

MODELLO CROMATO - CHROMED MODEL

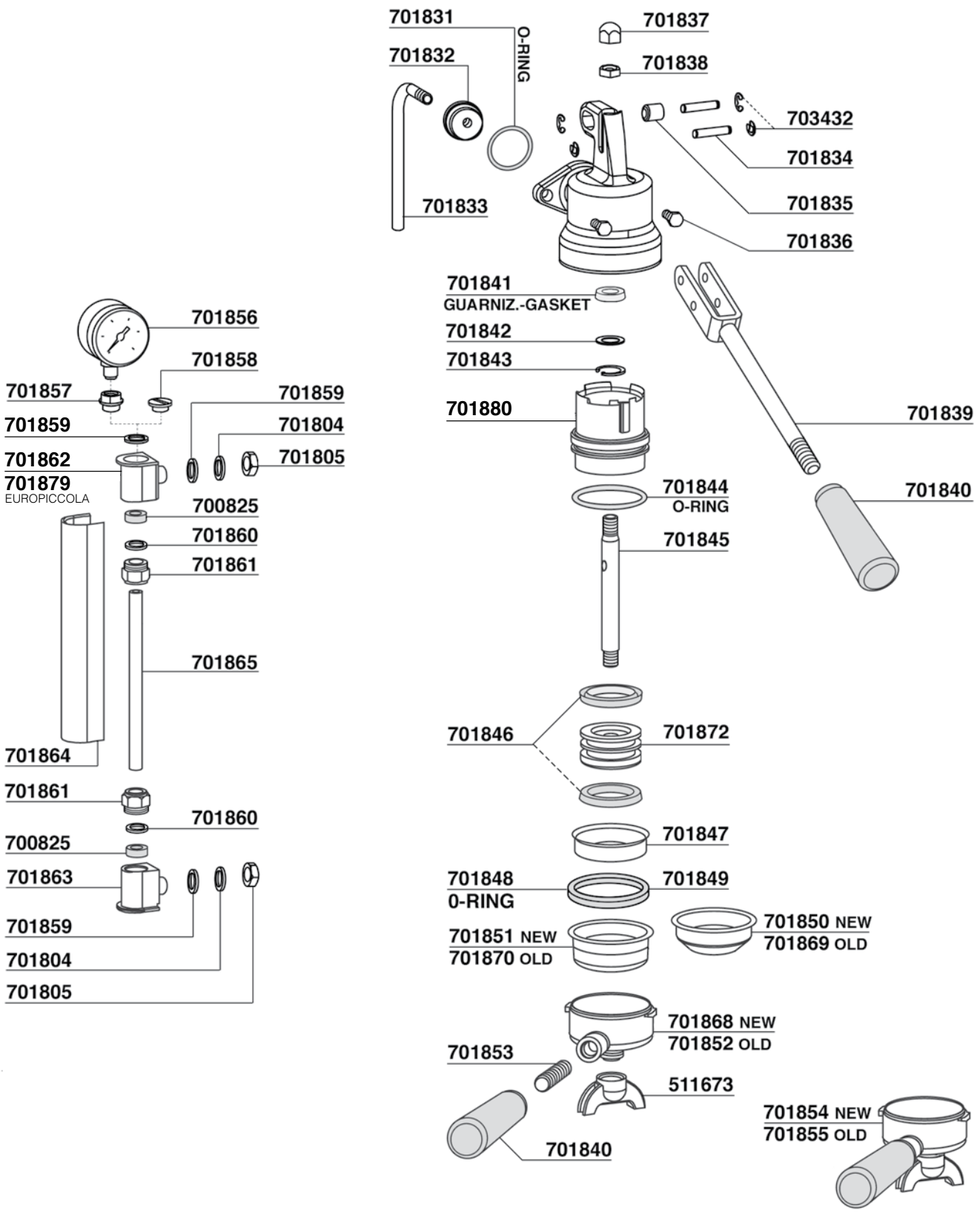

KIT COMPLETO GUARIZIONI EUROPICCOLA
EUROPICCOLA GASKET COMPLETE KIT — **COD. 701866**

KIT COMPLETO GUARNIZIONI PROFESSIONAL
PROFESSIONAL GASKET COMPLETE KIT — **COD. 701867**

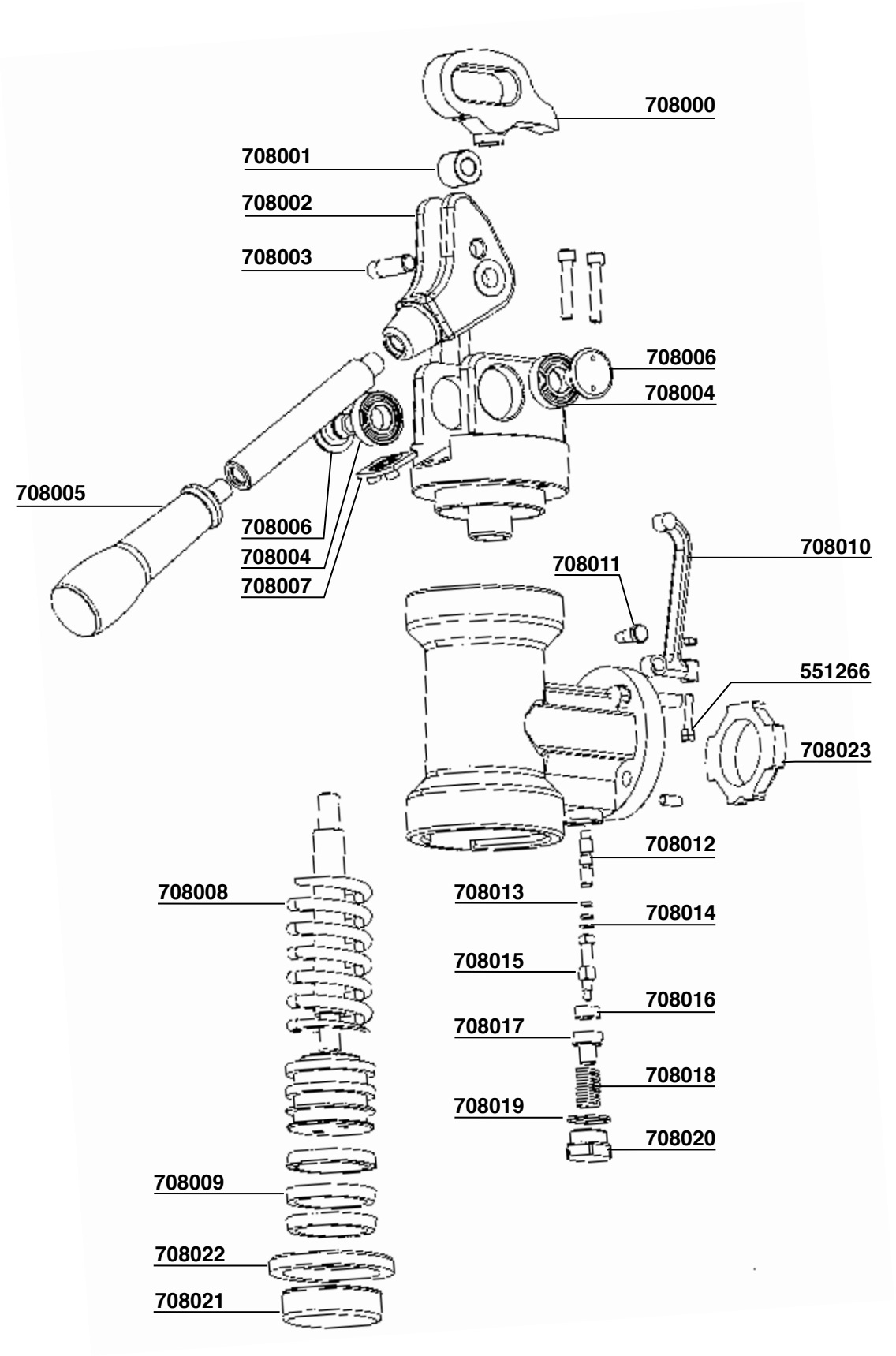
708000
708001
708002
708003
708006
708004
708005
708006
708004
708007
708010
708011
551266
708023
708012
708008
708013
708014
708015
708016
708017
708018
708019
708020
708009
708022
708021

PROMAC

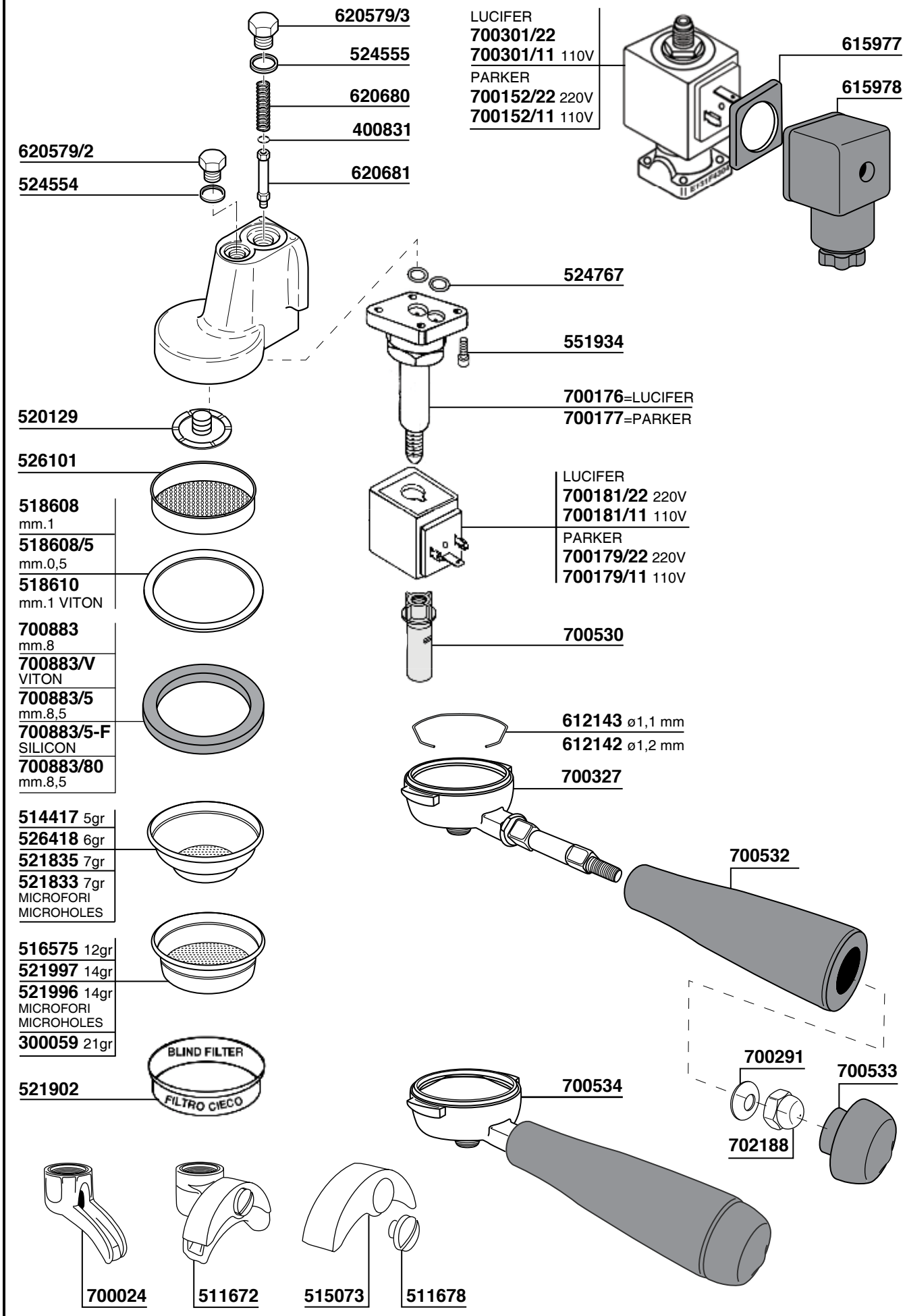
620579/3
524555
620680
400831
620681
620579/2
524554
LUCIFER
700301/22
700301/11 110V
PARKER
700152/22 220V
700152/11 110V
615977
615978
524767
551934
700176=LUCIFER
700177=PARKER
520129
526101
518608
mm.1
518608/5
mm.0,5
518610
mm.1 VITON
LUCIFER
700181/22 220V
700181/11 110V
PARKER
700179/22 220V
700179/11 110V
700883
mm.8
700883/V
VITON
700883/5
mm.8,5
700883/5-F
SILICON
700883/80
mm.8,5
700530
612143 ø1,1 mm
612142 ø1,2 mm
700327
514417 5gr
526418 6gr
521835 7gr
521833 7gr
MICROFORI
MICROHOLES
700532
516575 12gr
521997 14gr
521996 14gr
MICROFORI
MICROHOLES
300059 21gr
BLIND FILTER
FILTRO CIECO
521902
700291
700533
700534
702188
700024
511672
515073
511678

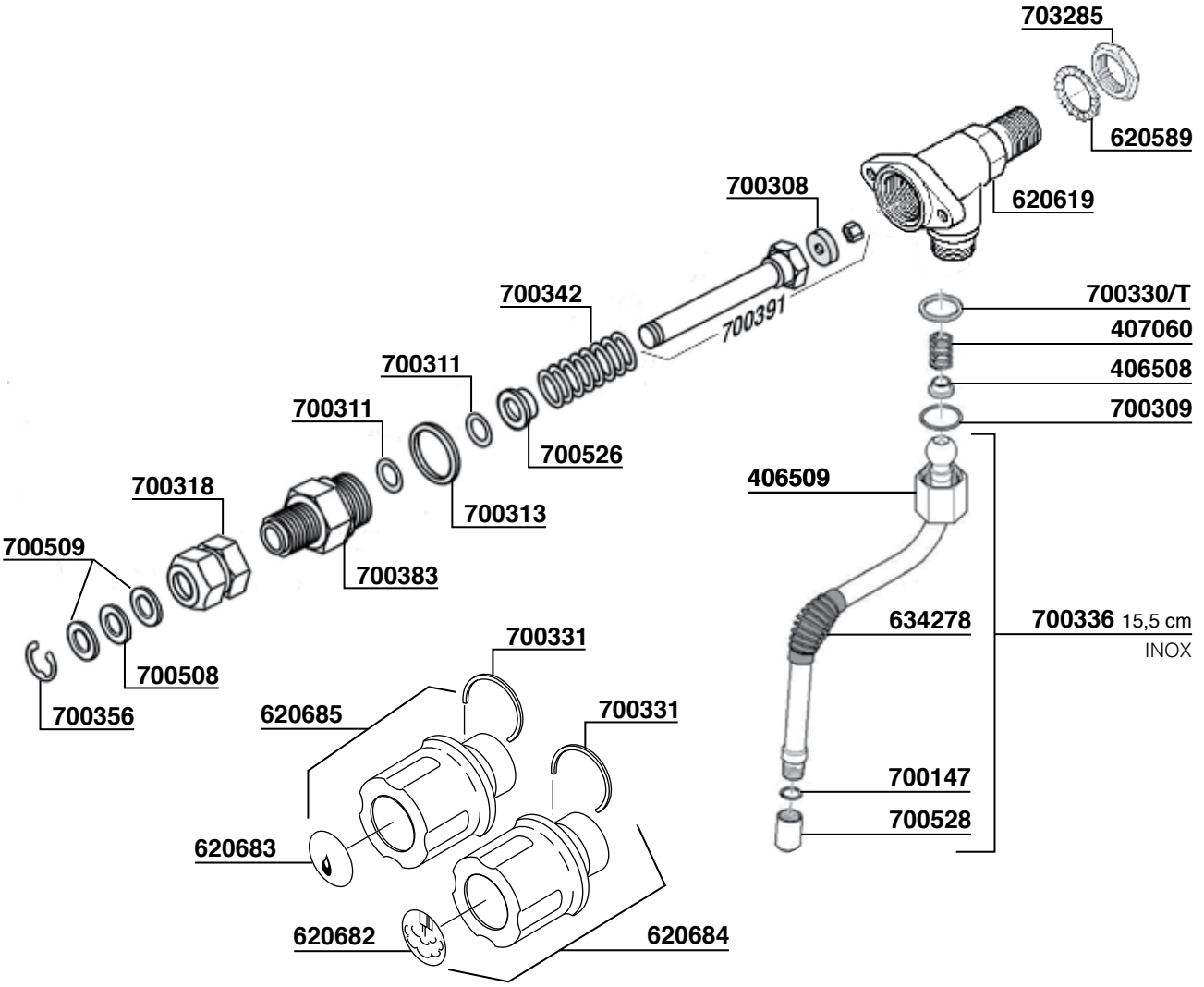
703285
620589
620619
700308
700391
700342
700330/T
407060
406508
700309
700311
700311
700526
700313
406509
700318
700383
700509
634278
700336 15,5 cm
INOX
700508
700356
700331
620685
700331
700147
700528
620683
620682
620684

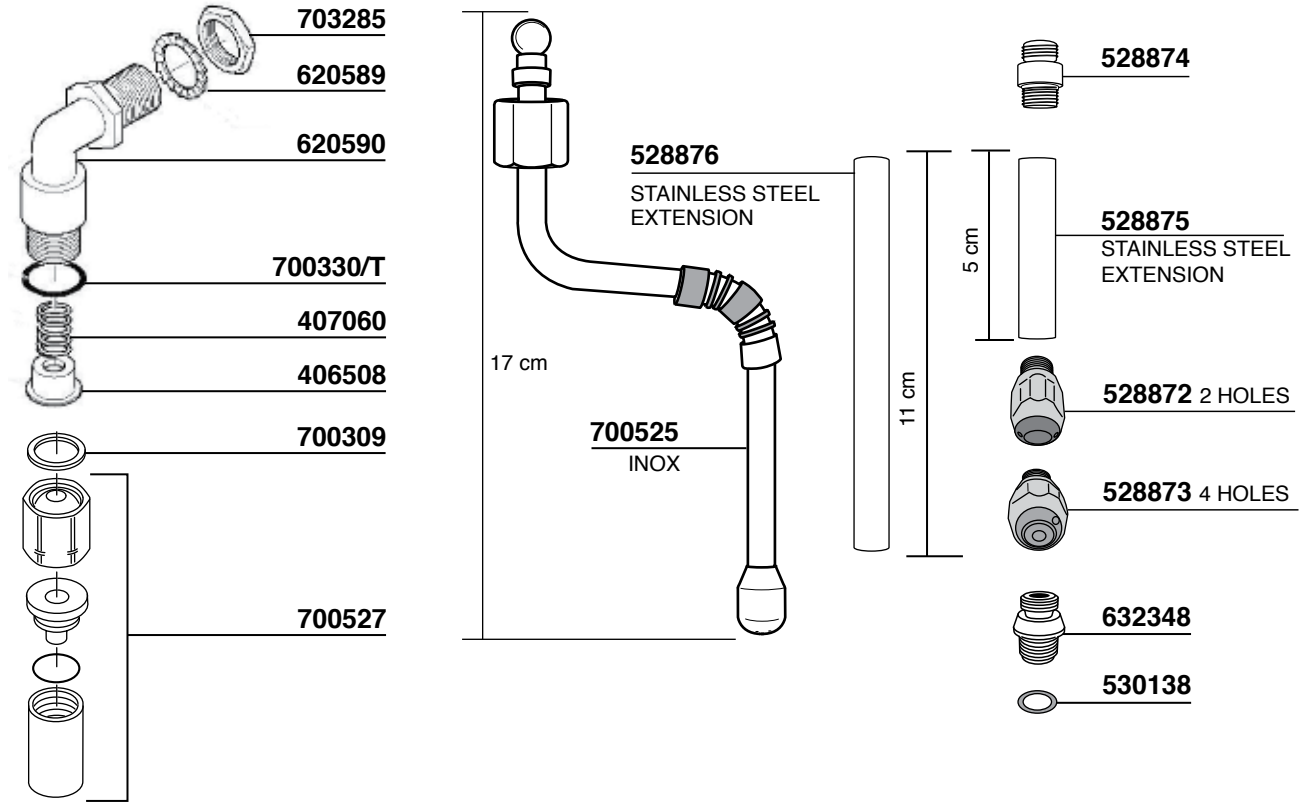
703285
620589
620590
700330/T
407060
406508
700309
700527
528876
STAINLESS STEEL
EXTENSION
17 cm
700525
INOX
11 cm
5 cm
528874
528875
STAINLESS STEEL
EXTENSION
528872 2 HOLES
528873 4 HOLES
632348
530138
633433=3 HOLES
FEMALE
633433/4=4 HOLES
FEMALE

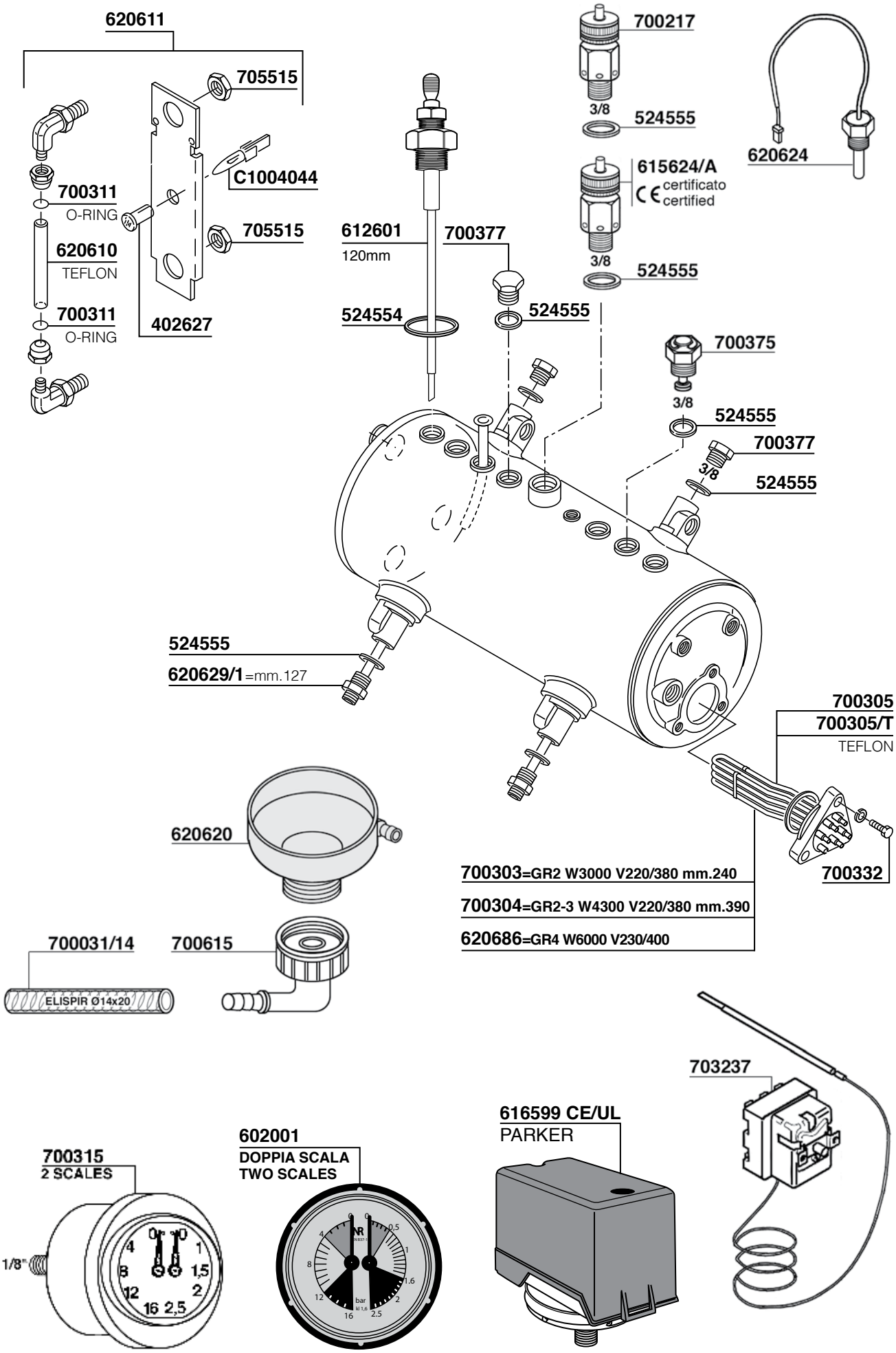
620611
705515
C1004044
705515
700311
O-RING
620610
TEFLON
700311
O-RING
402627
612601
120mm
700377
524554
524555
700217
3/8
524555
615624/A
certificato
certified
3/8
524555
620624
700375
3/8
524555
700377
3/8
524555
524555
620629/1 =mm.127
700305
700305/T
TEFLON
620620
700332
700303=GR2 W3000 V220/380 mm.240
700304=GR2-3 W4300 V220/380 mm.390
620686=GR4 W6000 V230/400
700031/14
ELISPIR Ø14x20
700615
703237
616599 CE/UL
PARKER
602001
DOPPIA SCALA
TWO SCALES
700315
2 SCALES
1/8"

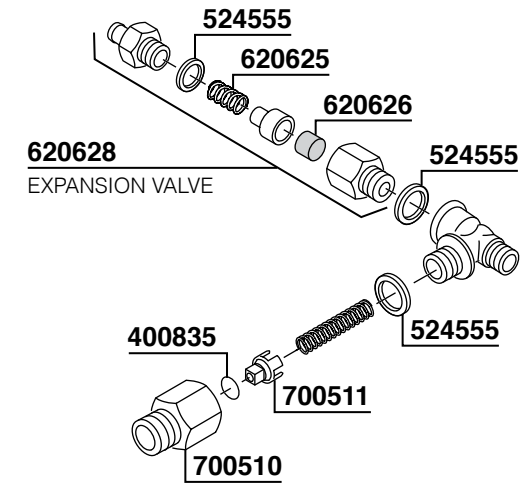
524555
620625
620626
620628
EXPANSION VALVE
524555
524555
400835
700511
700510

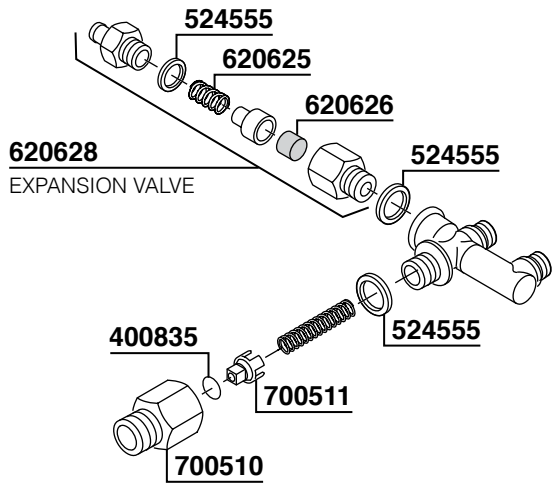
524555
620625
620626
620628
EXPANSION VALVE
524555
524555
400835
700511
700510

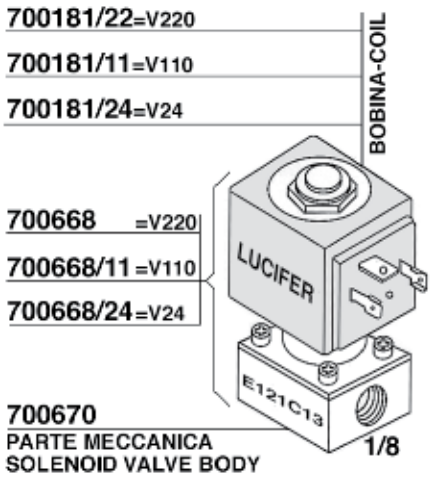
700181/22=V220
700181/11=V110
700181/24=V24
BOBINA-COIL
700668 =V220
700668/11 =V110
700668/24=V24
LUCIFER
E121C13
700670
PARTE MECCANICA
SOLENOID VALVE BODY
1/8

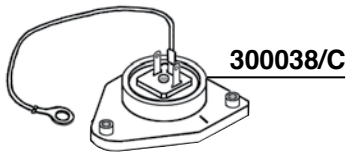
300038/C

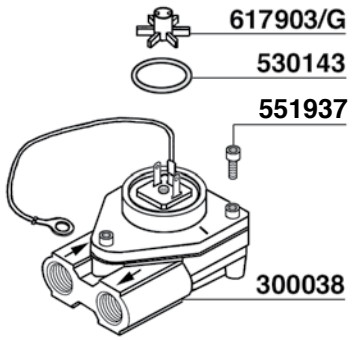
617903/G
530143
551937
300038

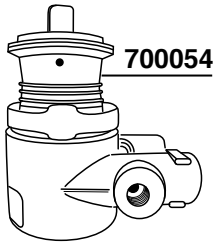
700054

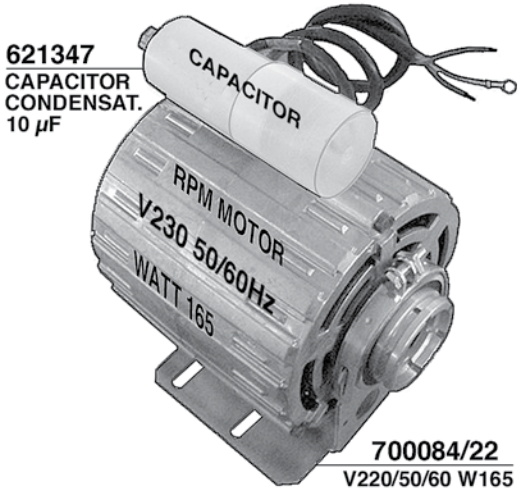
621347
CAPACITOR
CONDENSAT.
10 μF
CAPACITOR
RPM MOTOR
V230 50/60Hz
WATT 165
700084/22
V220/50/60 W165

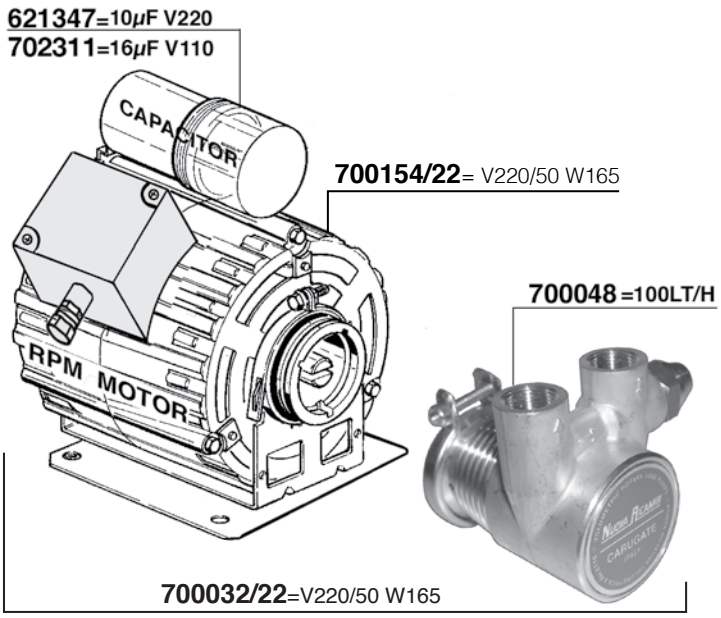
621347=10μF V220
702311=16μF V110
CAPACITOR
700154/22= V220/50 W165
700048 =100LT/H
RPM MOTOR
700032/22=V220/50 W165

700042

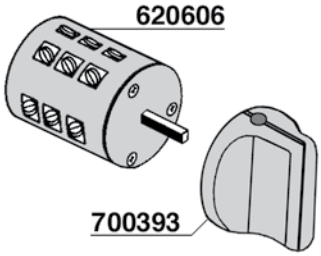

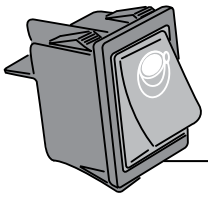

620687

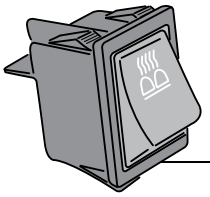

620688

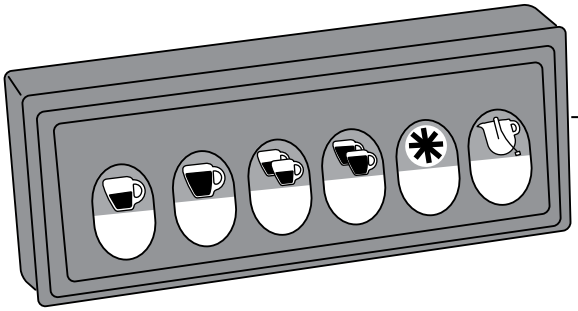

620689
GICAR CODE 9.9.08.91.G

620690
GICAR CODE 9.5.13.59.G

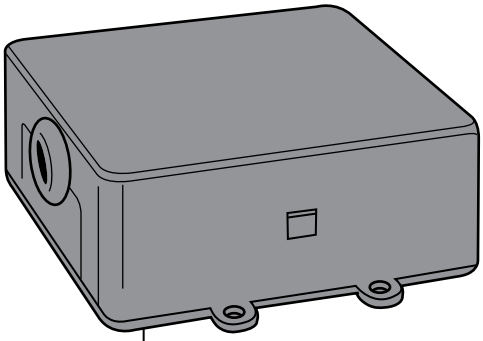

620691 GR1/2/3 230V
GICAR CODE 9.5.25.49.G

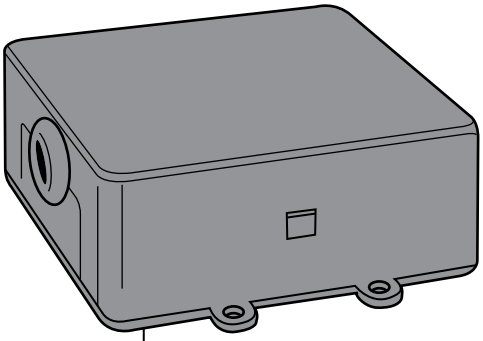

620693 GR2/3 230V PROMAC PLUS
GICAR CODE 9.5.25.29.G

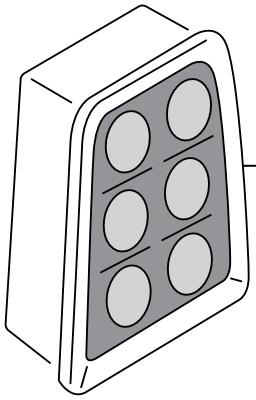

620694
GICAR CODE 9.9.18.36.G

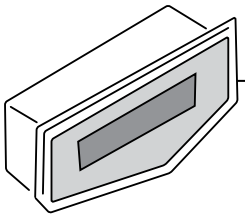

620695
GICAR CODE 9.5.31.67.G

RANCILIO

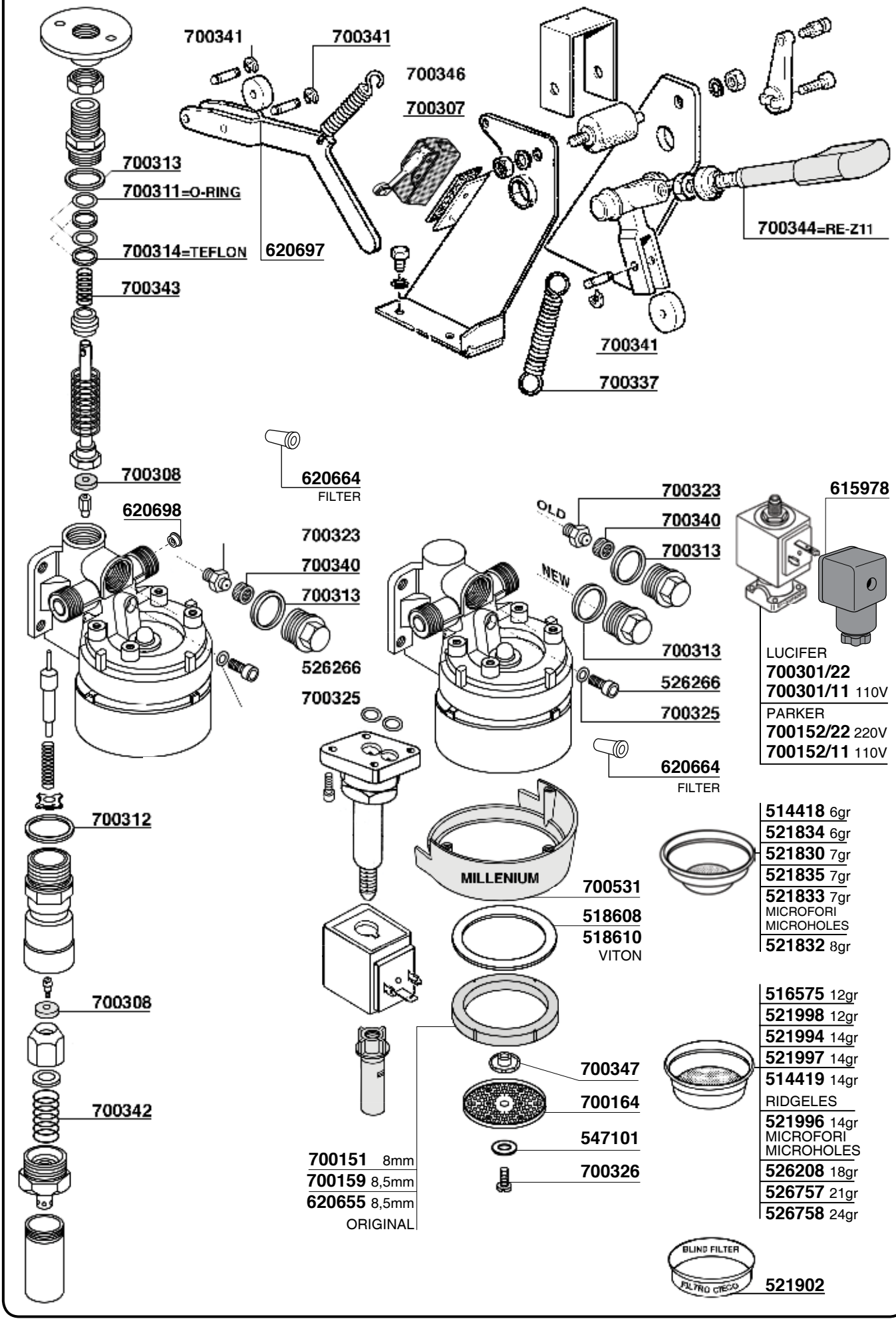
700341
700341
700346
700307
700313
700311=O-RING
700314=TEFLON
620697
700343
700344=RE-Z11
700341
700337
620664
FILTER
700308
620698
700323
700340
700313
526266
700325
OLD
NEW
700323
700340
700313
700313
526266
700325
620664
FILTER
615978
LUCIFER
700301/22
700301/11 110V
PARKER
700152/22 220V
700152/11 110V
700312
MILLENIUM
700531
518608
518610
VITON
514418 6gr
521834 6gr
521830 7gr
521835 7gr
521833 7gr
MICROFORI
MICROHOLES
521832 8gr
700308
700342
700347
700164
547101
700326
700151 8mm
700159 8,5mm
620655 8,5mm
ORIGINAL
516575 12gr
521998 12gr
521994 14gr
521997 14gr
514419 14gr
RIDGELES
521996 14gr
MICROFORI
MICROHOLES
526208 18gr
526757 21gr
526758 24gr
BLIND FILTER
FILTRO CIECO
521902

RANCILIO

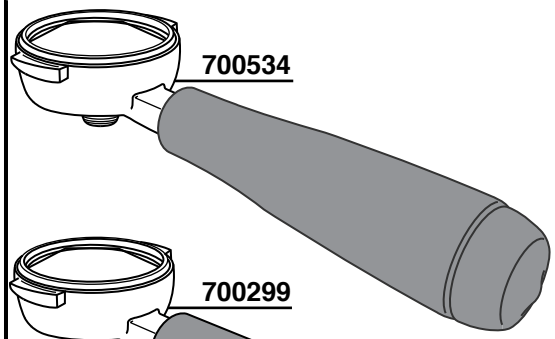

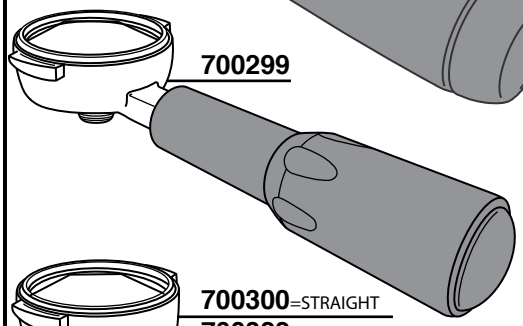

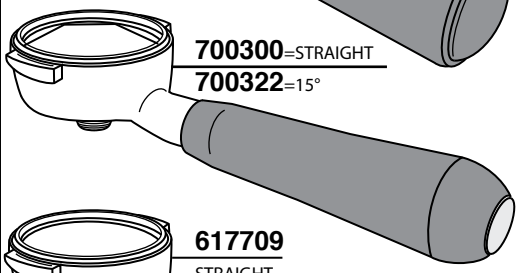

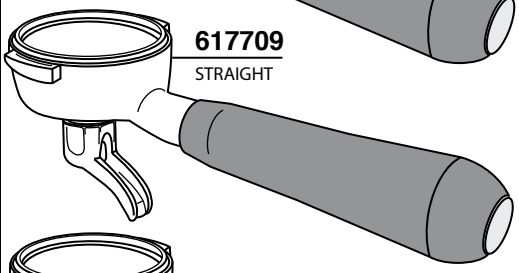

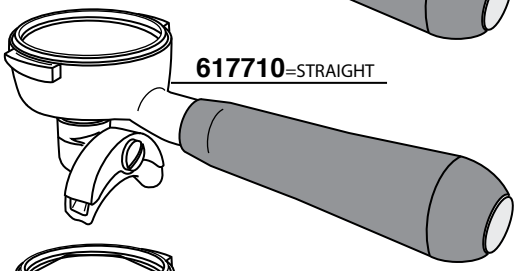

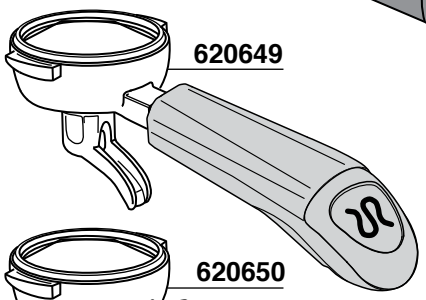

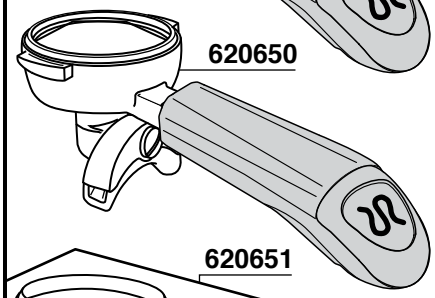

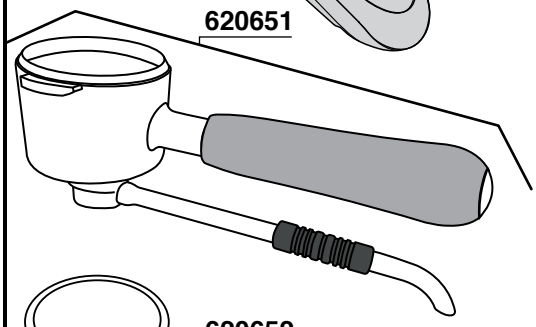

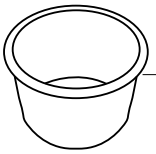

620652
FILETR 42 GR

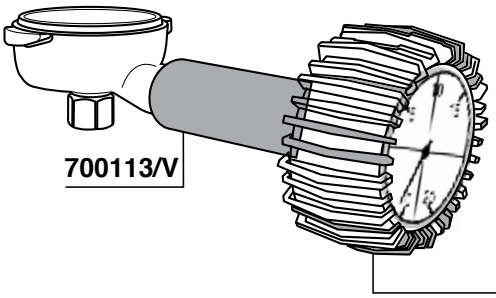

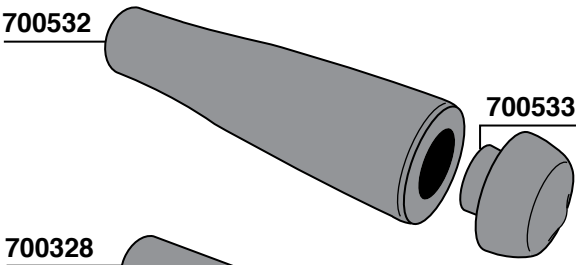

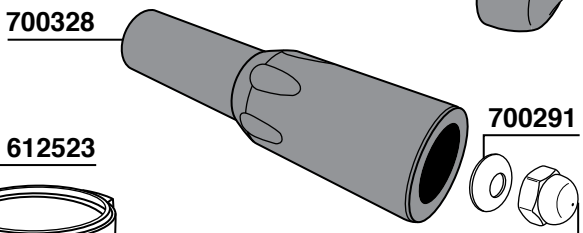

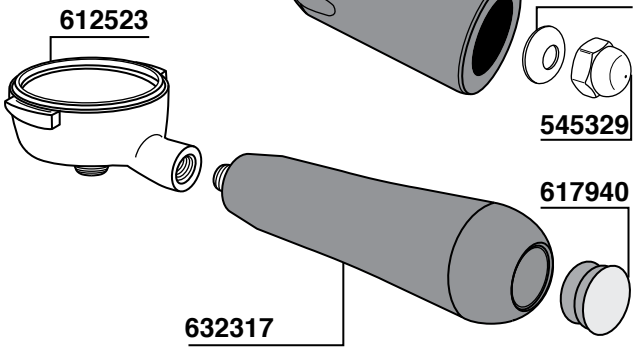

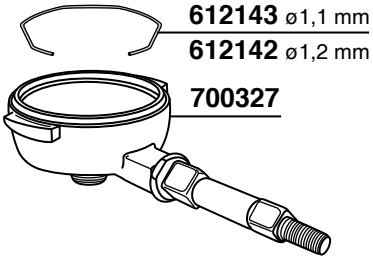

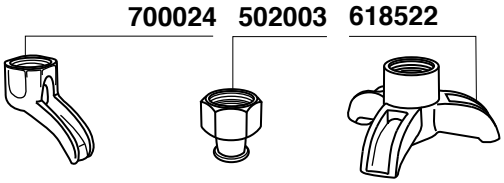

ALUMINIUM

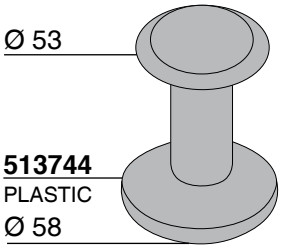

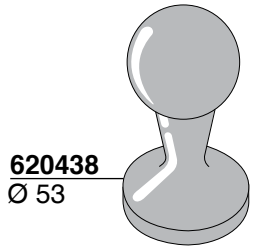

RANCILIO

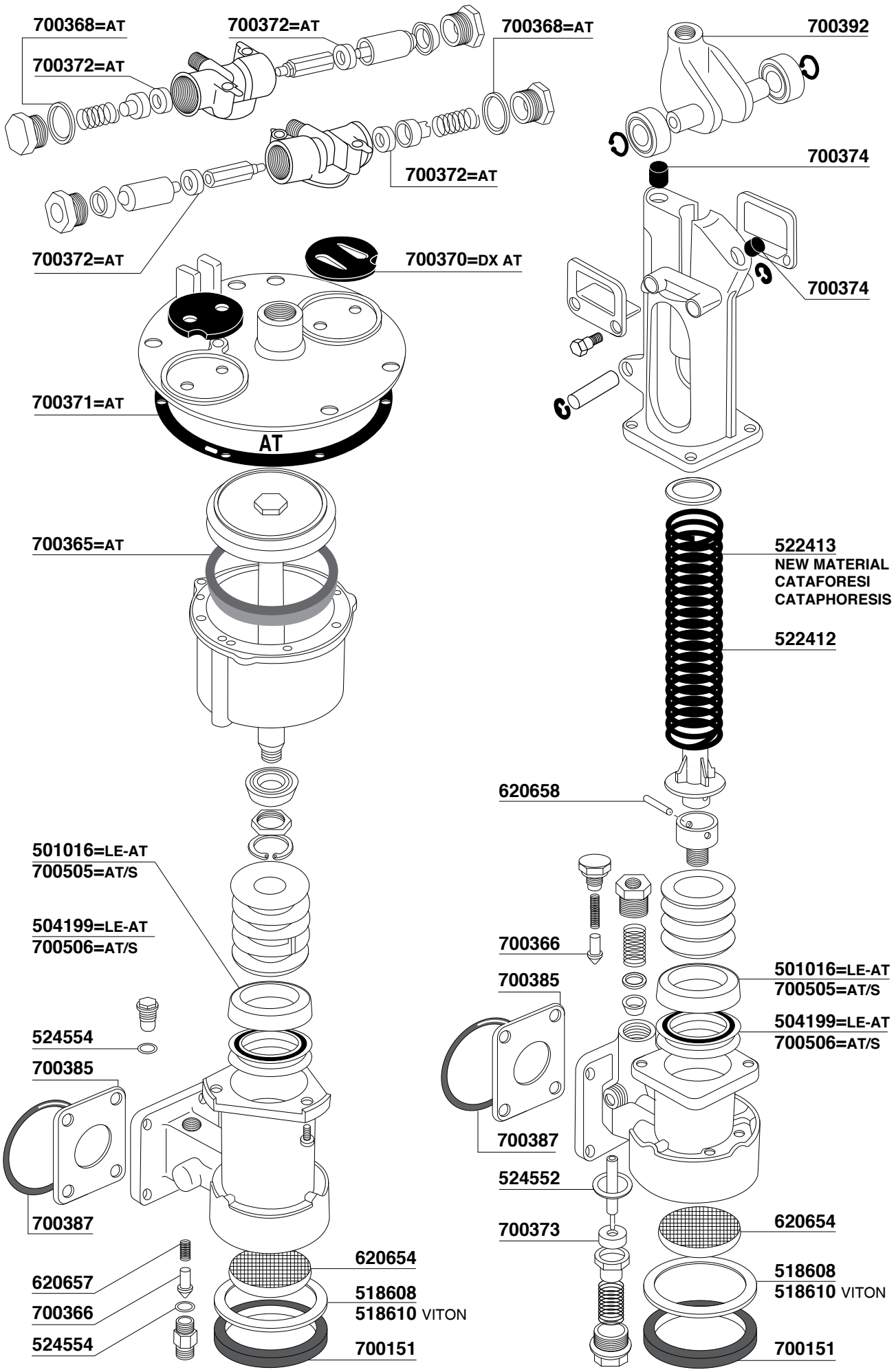
700368=AT
700372=AT
700372=AT
700368=AT
700392
700372=AT
700374
700372=AT
700370=DX AT
700374
700371=AT
AT
700365=AT
522413
NEW MATERIAL
CATAFORESI
CATAPHORESIS
522412
620658
501016=LE-AT
700505=AT/S
504199=LE-AT
700506=AT/S
700366
700385
501016=LE-AT
700505=AT/S
504199=LE-AT
700506=AT/S
524554
700385
700387
524552
700387
700373
620654
620654
518608
518610 VITON
620657
518608
518610 VITON
700366
524554
700151
700151

RANCILIO

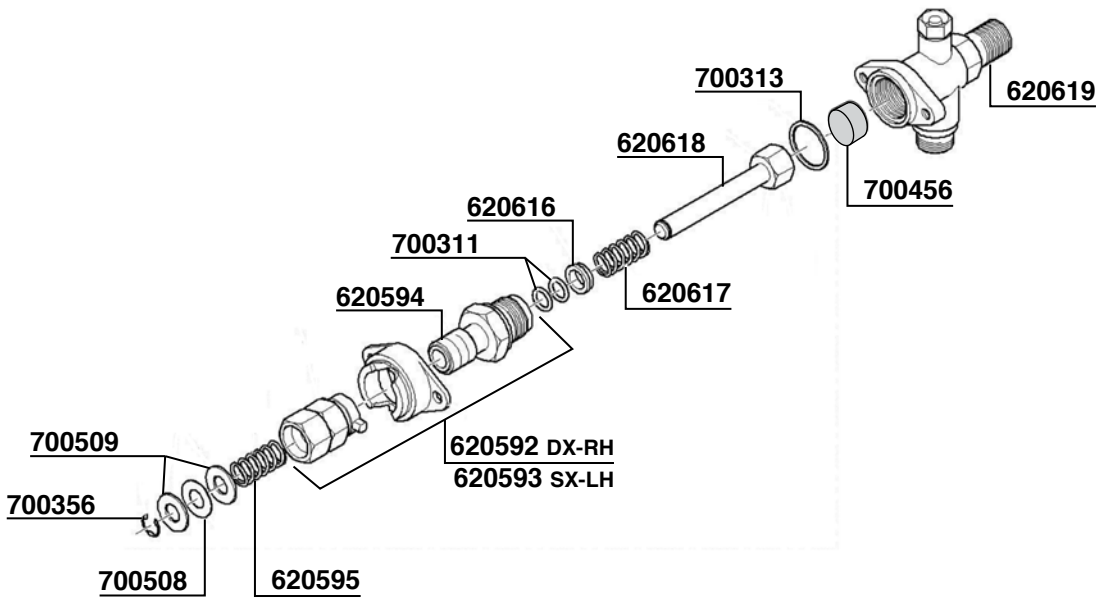
700313
620619
620618
700456
620616
700311
620617
620594
700509
620592 DX-RH
620593 SX-LH
700356
700508
620595

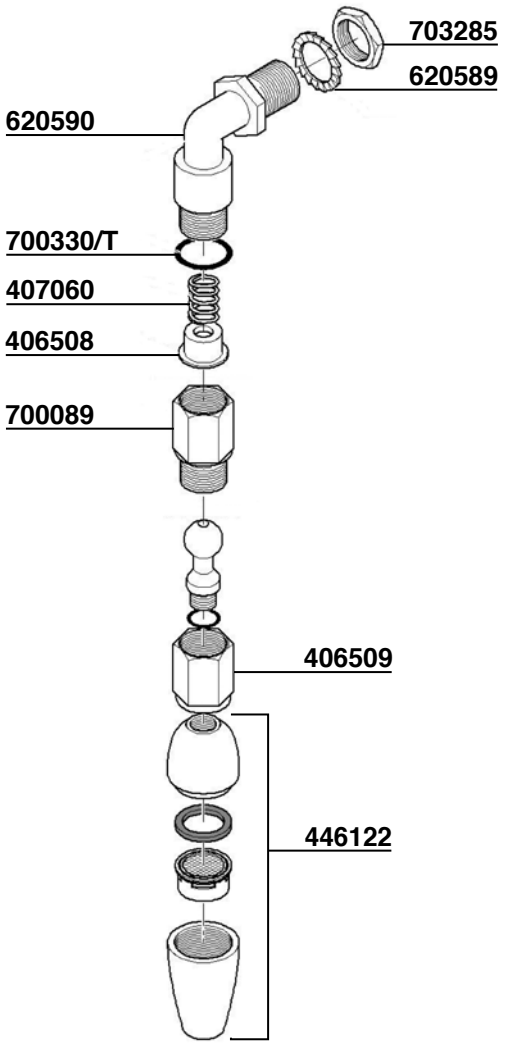
703285
620589
620590
700330/T
407060
406508
700089
406509
446122

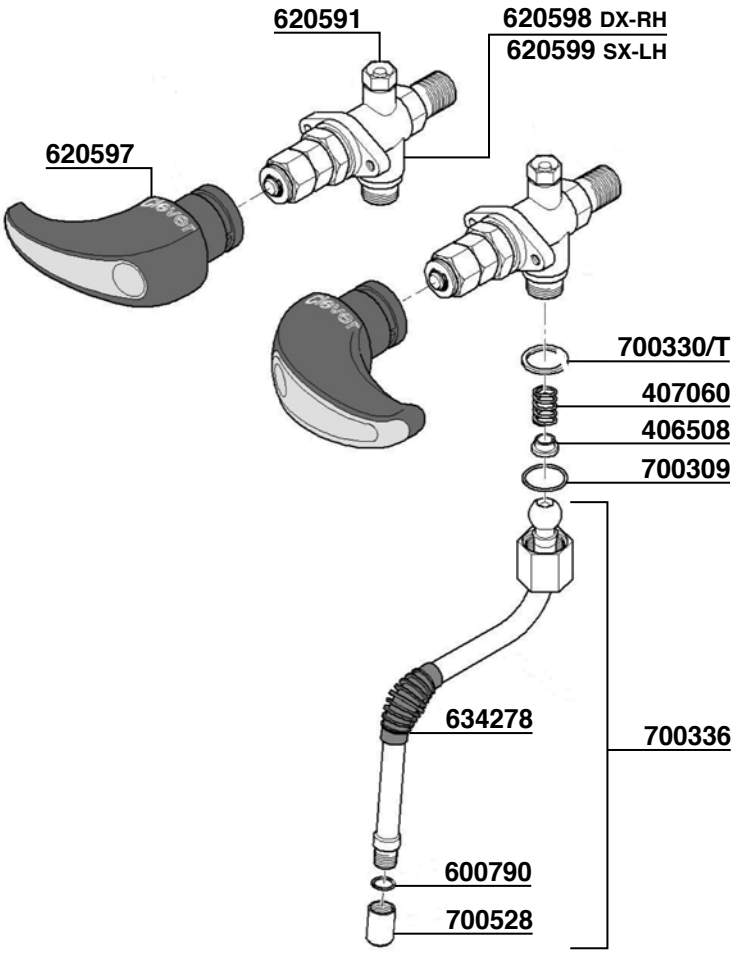
620591
620598 DX-RH
620599 SX-LH
620597
700330/T
407060
406508
700309
634278
700336
600790
700528

RANCILIO

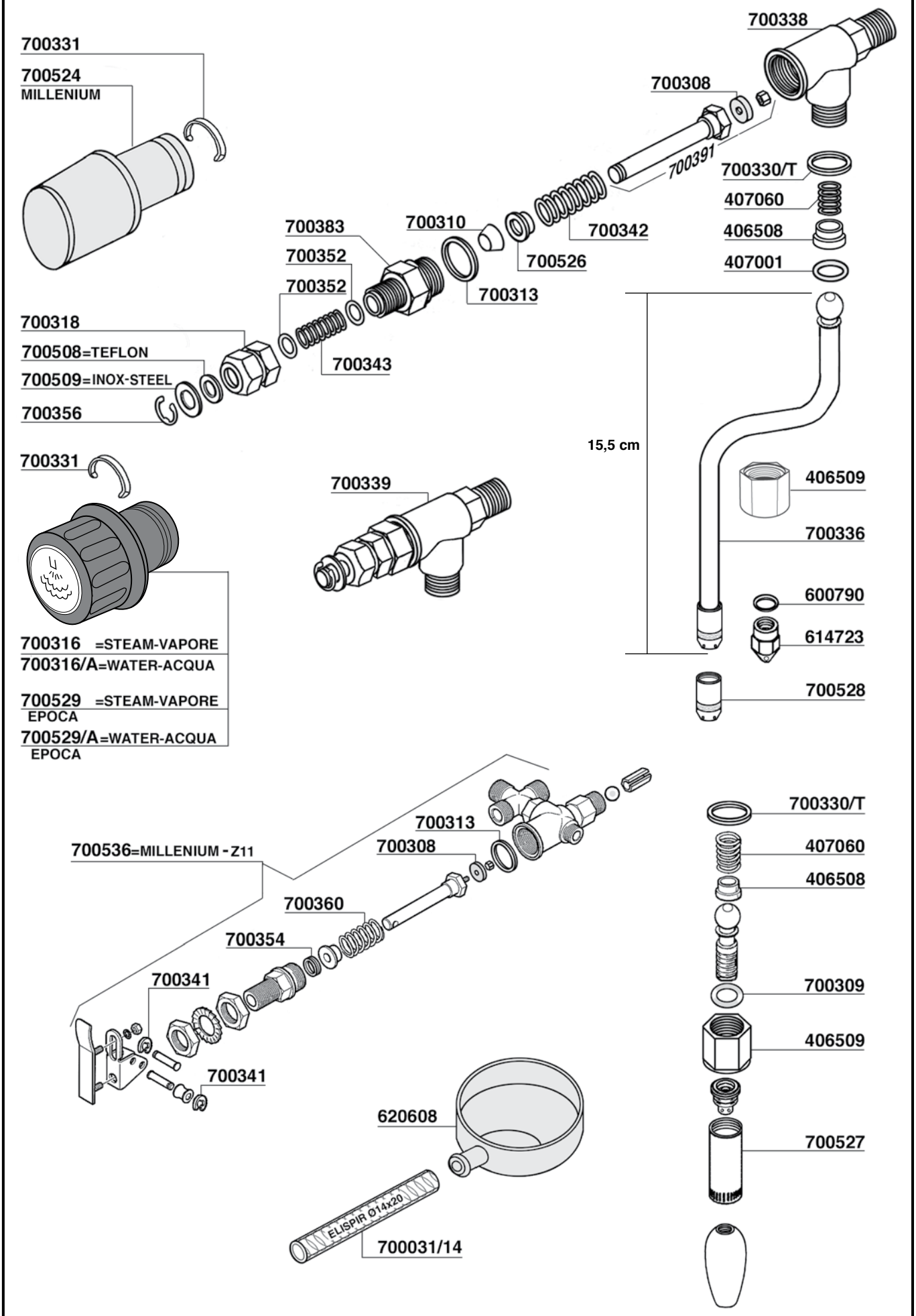
700331
700524
MILLENIUM
700338
700308
700391
700330/T
407060
406508
407001
700383
700310
700342
700352
700526
700352
700313
700318
700508=TEFLON
700509=INOX-STEEL
700343
700356
15,5 cm
406509
700336
600790
614723
700528
700331
700339
700316 =STEAM-VAPORE
700316/A=WATER-ACQUA
700529 =STEAM-VAPORE
EPOCA
700529/A=WATER-ACQUA
EPOCA
700330/T
700313
700536=MILLENIUM - Z11
700308
407060
406508
700360
700354
700341
700309
406509
700341
620608
700527
ELISPIR Ø14x20
700031/14

NUOVA RICAMBI

RANCILIO

Tav. 06

CLASSE 10

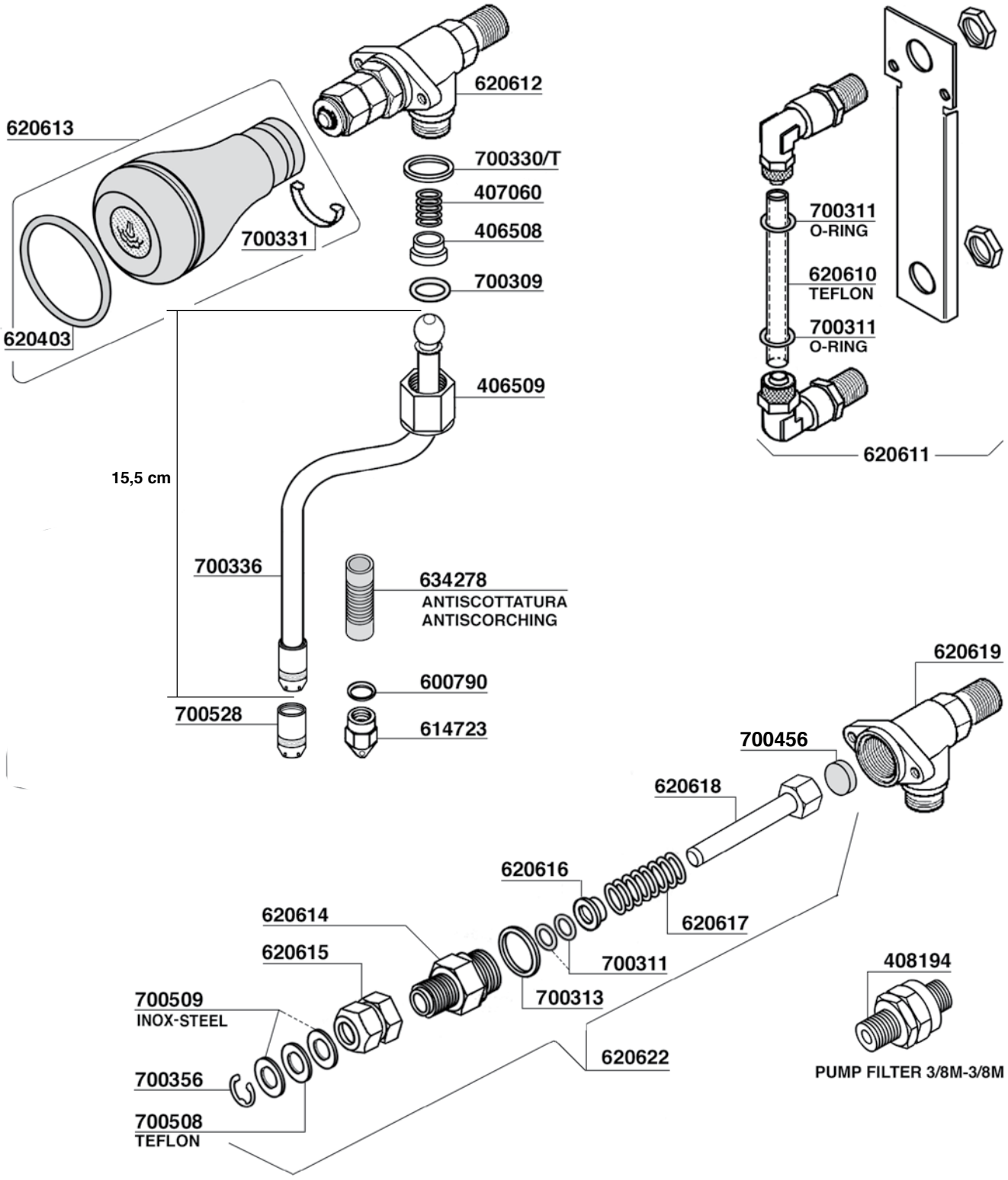

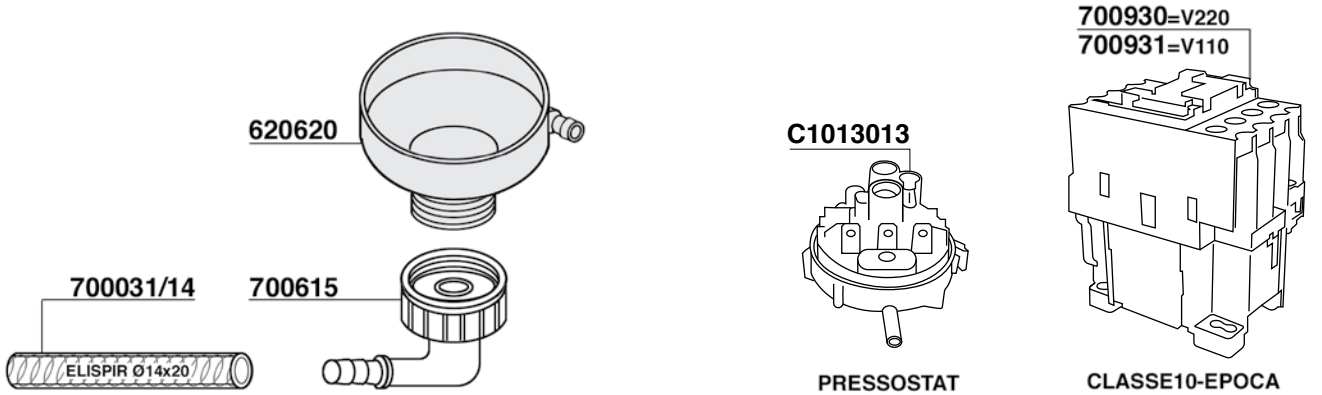

RANCILIO

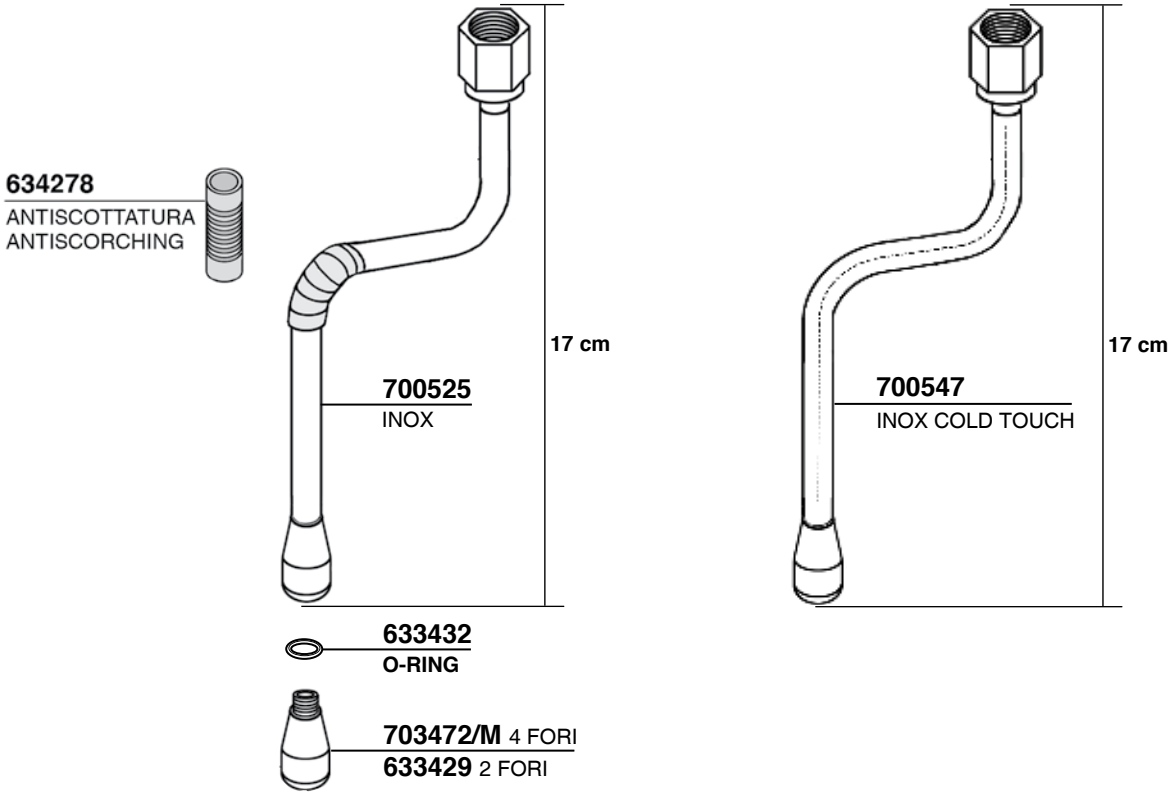
634278
ANTISCOTTATURA
ANTISCORCHING
17 cm
700525
INOX
17 cm
700547
INOX COLD TOUCH
633432
O-RING
703472/M 4 FORI
633429 2 FORI

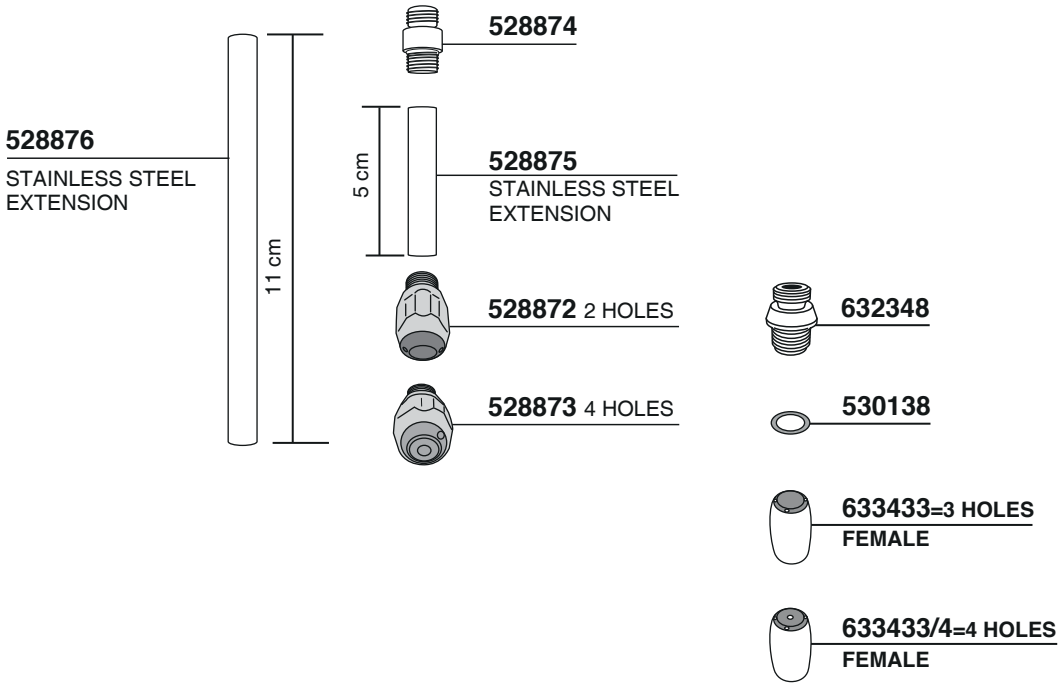
528874
528876
STAINLESS STEEL
EXTENSION
5 cm
528875
STAINLESS STEEL
EXTENSION
11 cm
528872 2 HOLES
632348
528873 4 HOLES
530138
633433=3 HOLES
FEMALE
633433/4=4 HOLES
FEMALE

RANCILIO

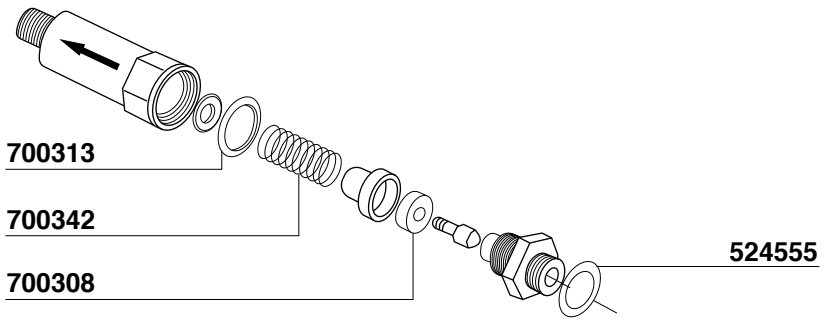

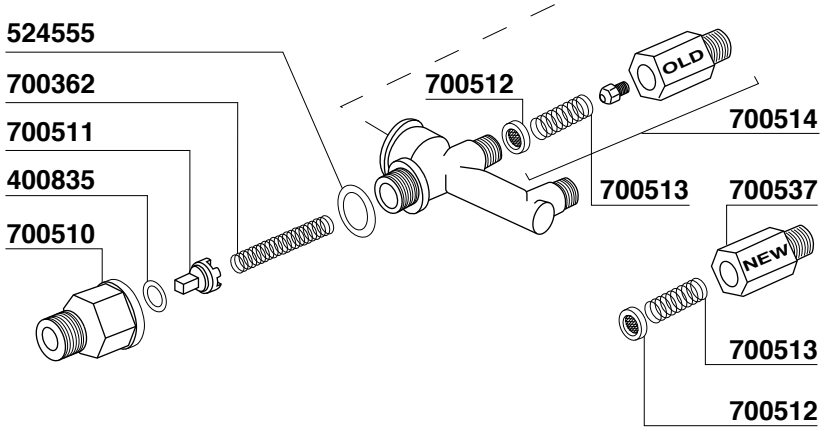

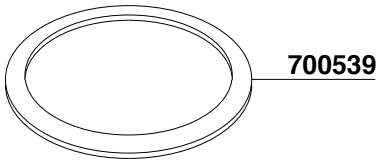

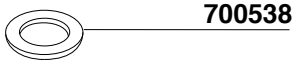

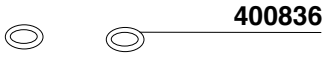

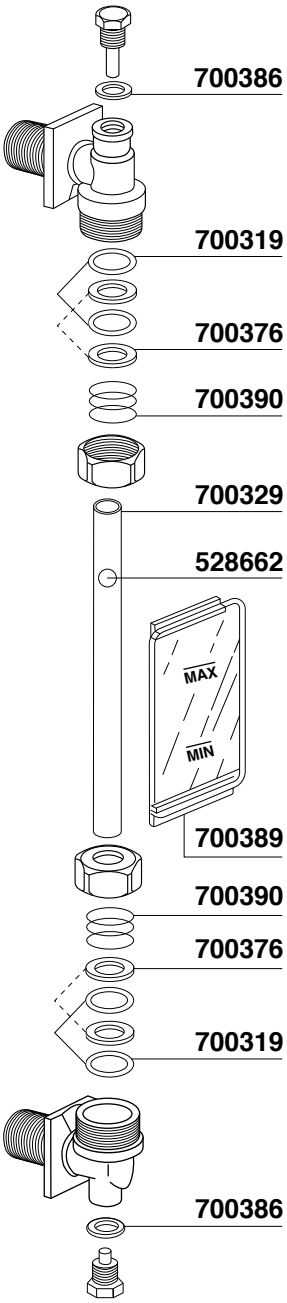

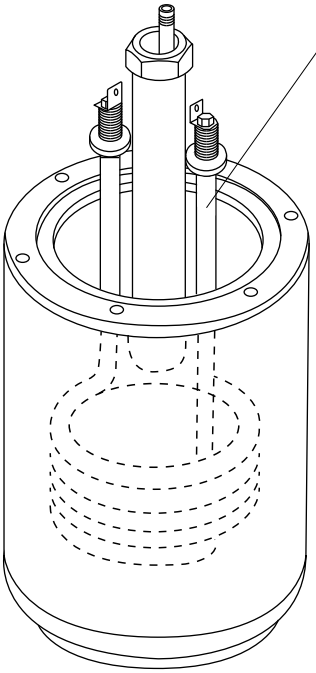

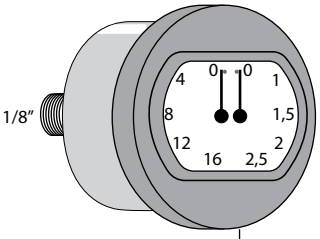

700315
2 SCALES

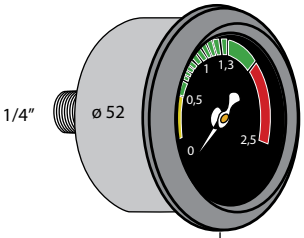

700394
1 SCALE

620656

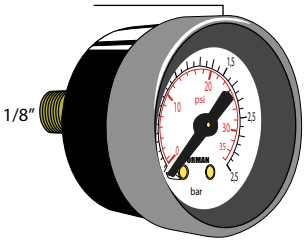

700320

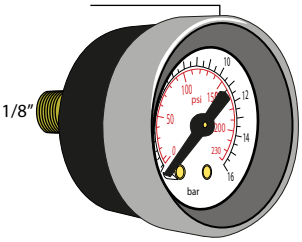

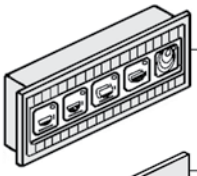

700397=Z9DE-Z11(OLD)

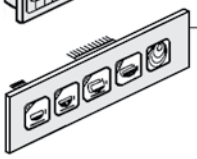

700398/S
Z11 OMICRON-TECNA-S20

700541=CDX

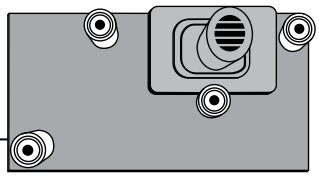

620600/N

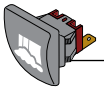

620603= WATER PUSH BUTTON MLN/SDE
620604= WATER SWITCH MLN/CDX

620601
EPOCA CD

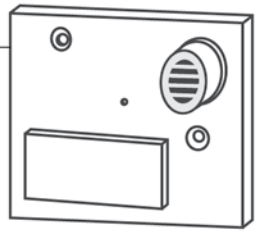

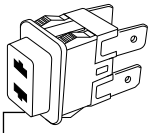

620609
SWITCH

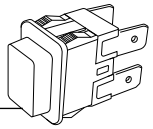

620630=ORANGE V230
2 POLE LUMINOUS SWITCH

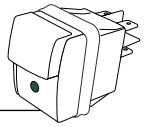

620632
INTERRUTTORE BIP.VERDE EPOCA

620602
EPOCA DE

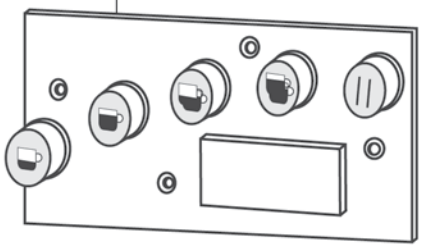

700181/22=V220
700181/11=V110
700181/24=V24
BOBINA-COIL

617903/G

530143

551937

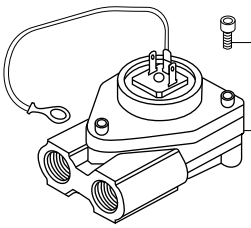

300038

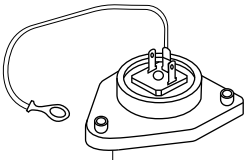

300038/C

700668 =V220
700668/11 =V110
700668/24=V24

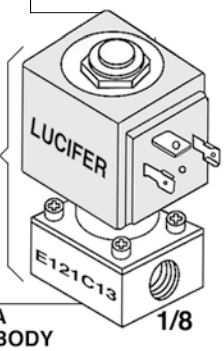

700670
PARTE MECCANICA
SOLENOID VALVE BODY
1/8

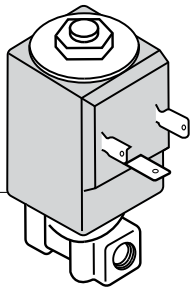

700181/22=V220
700181/11=V110

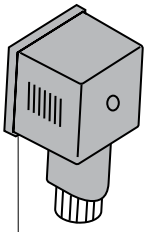

615978/P

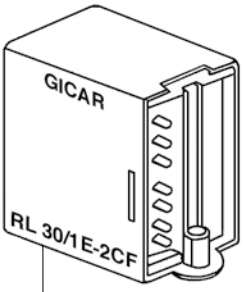

700737 =V220
700737/11=V110

620606

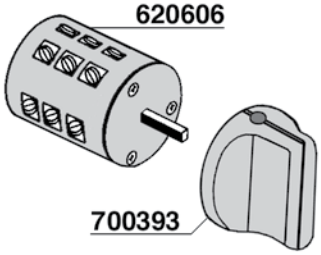

700393

700381

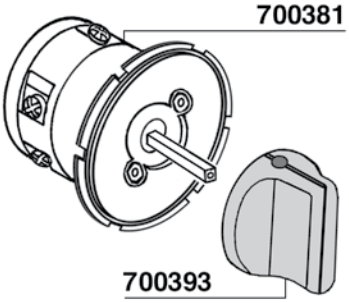

700393

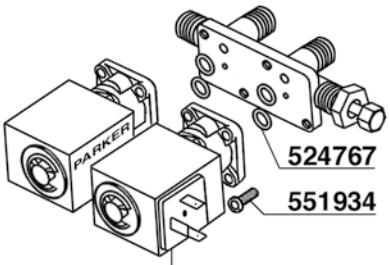

524767
551934
PARKER
634294/22=V220
634294/11=V110

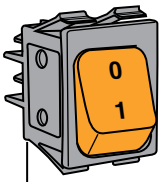

700382 ORANGE

RANCILIO

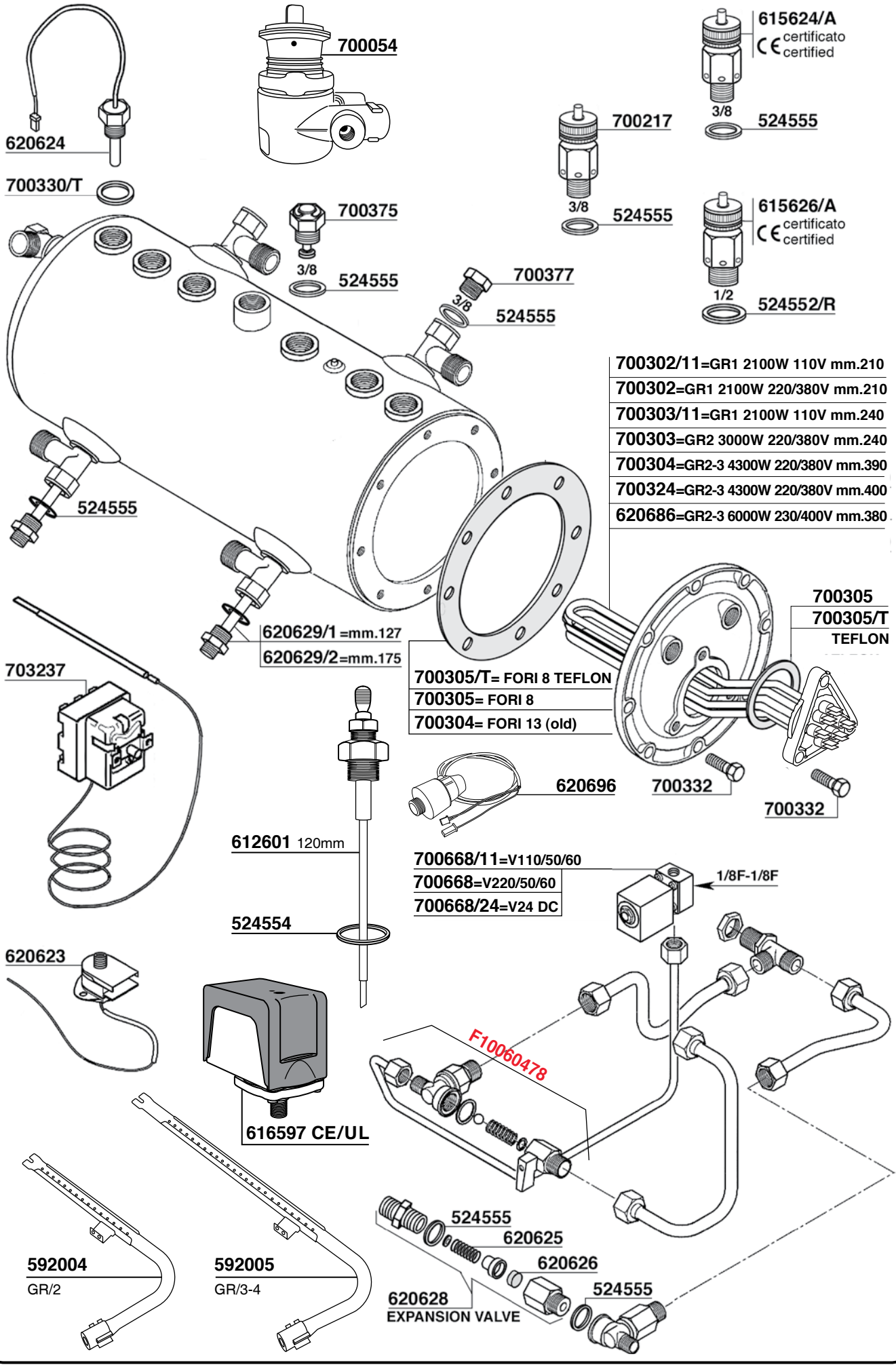
620624
700054
700330/T
700375
3/8
524555
700377
3/8
524555
700217
3/8
524555
615624/A
CE certificato certified
3/8
524555
615626/A
CE certificato certified
1/2
524552/R
524555
620629/1 =mm.127
620629/2=mm.175
700302/11=GR1 2100W 110V mm.210
700302=GR1 2100W 220/380V mm.210
700303/11=GR1 2100W 110V mm.240
700303=GR2 3000W 220/380V mm.240
700304=GR2-3 4300W 220/380V mm.390
700324=GR2-3 4300W 220/380V mm.400
620686=GR2-3 6000W 230/400V mm.380
700305
700305/T
TEFLON
700305/T= FORI 8 TEFLON
700305= FORI 8
700304= FORI 13 (old)
703237
620696
700332
700332
612601 120mm
524554
700668/11=V110/50/60
700668=V220/50/60
700668/24=V24 DC
1/8F-1/8F
620623
F10060478
616597 CE/UL
592004
GR/2
592005
GR/3-4
524555
620625
620626
524555
620628
EXPANSION VALVE

RANCILIO

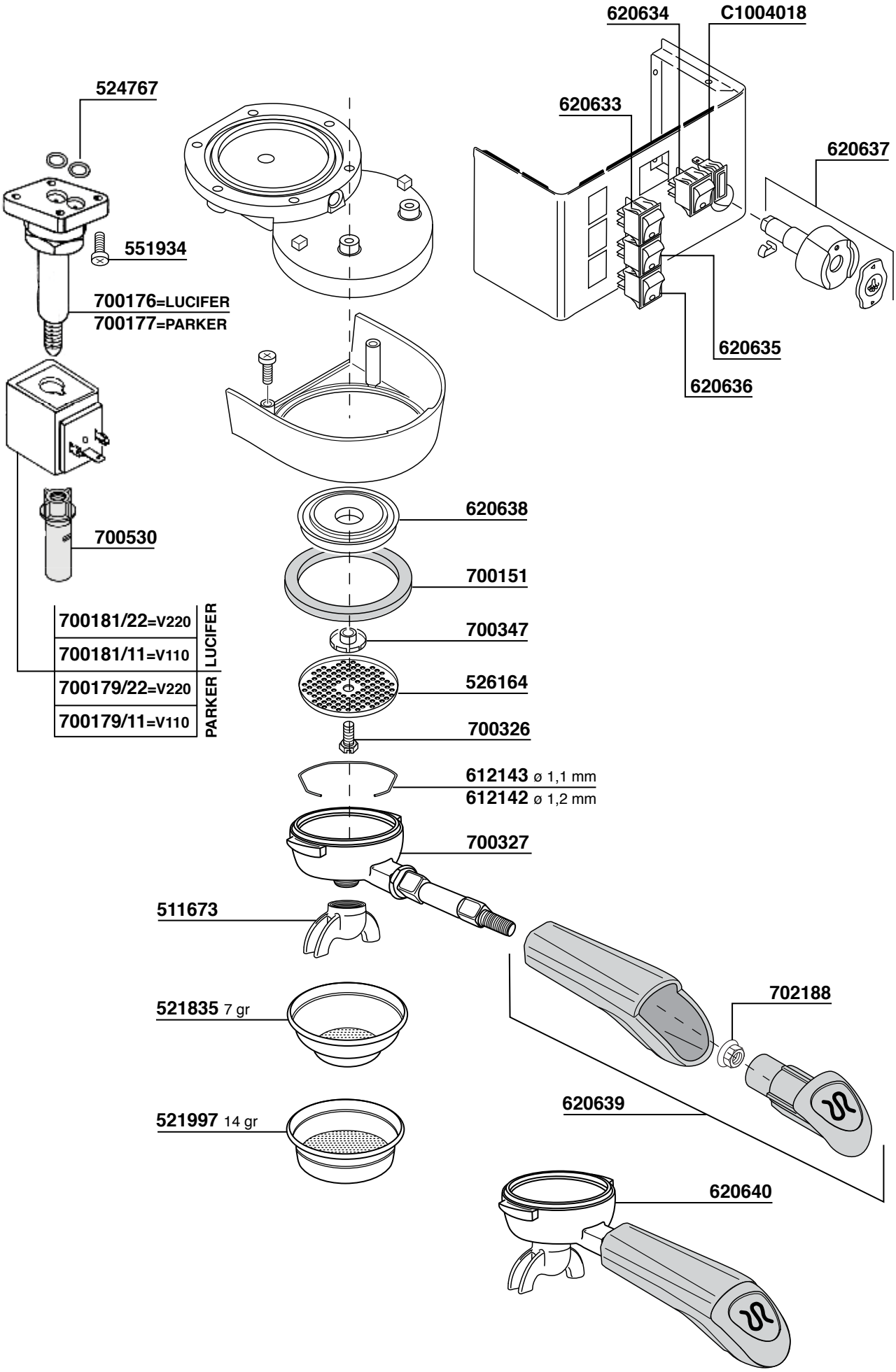
620634
C1004018
620633
620637
524767
551934
700176=LUCIFER
700177=PARKER
620635
620636
620638
700530
700151
700181/22=V220
700181/11=V110
700179/22=V220
700179/11=V110
LUCIFER
PARKER
700347
526164
700326
612143 ø 1,1 mm
612142 ø 1,2 mm
700327
511673
702188
521835 7 gr
620639
521997 14 gr
620640

RANCILIO

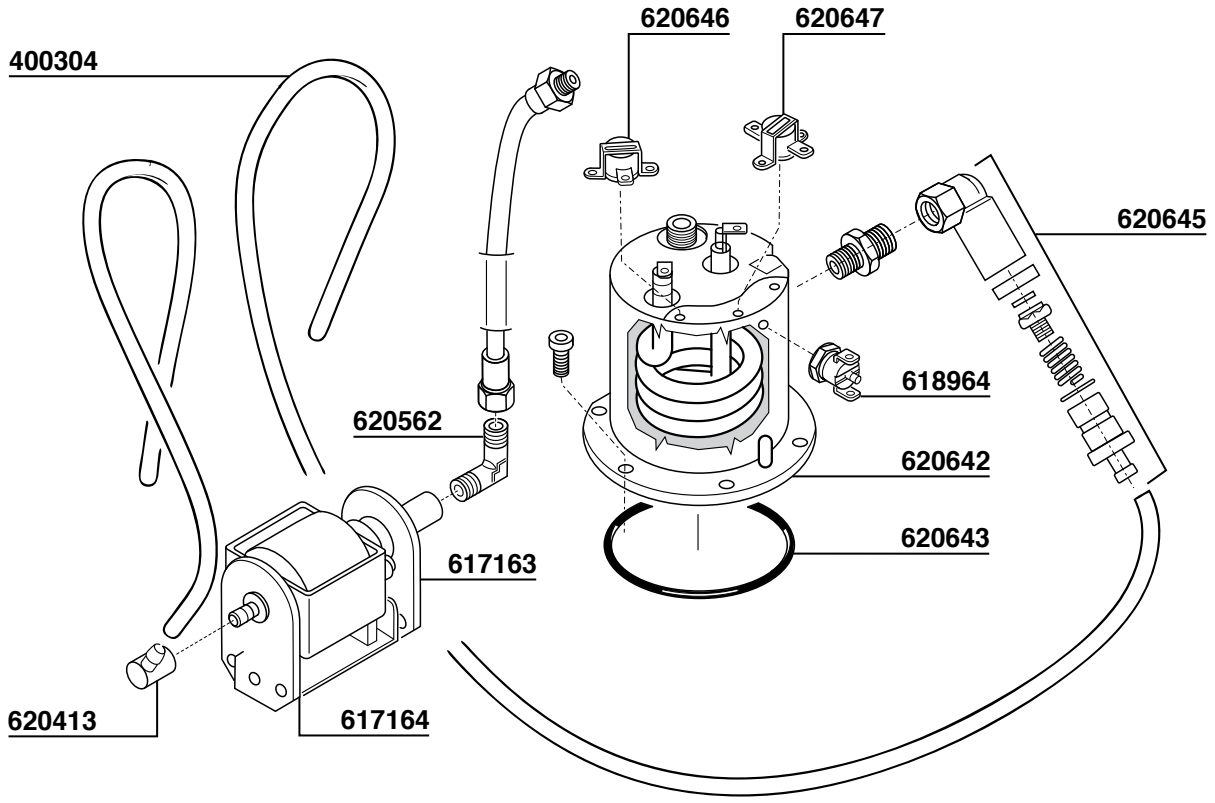
620646
620647
400304
620645
618964
620562
620642
620643
617163
620413
617164

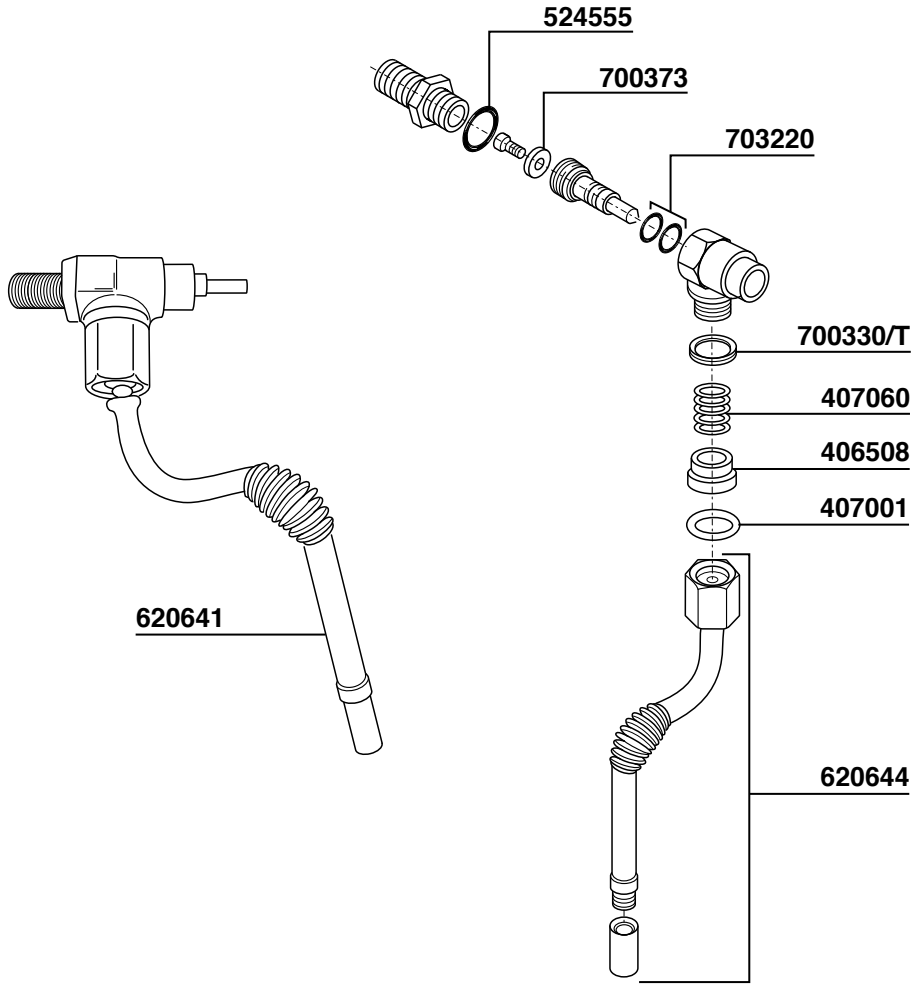
524555
700373
703220
700330/T
407060
406508
407001
620641
620644

SANREMO

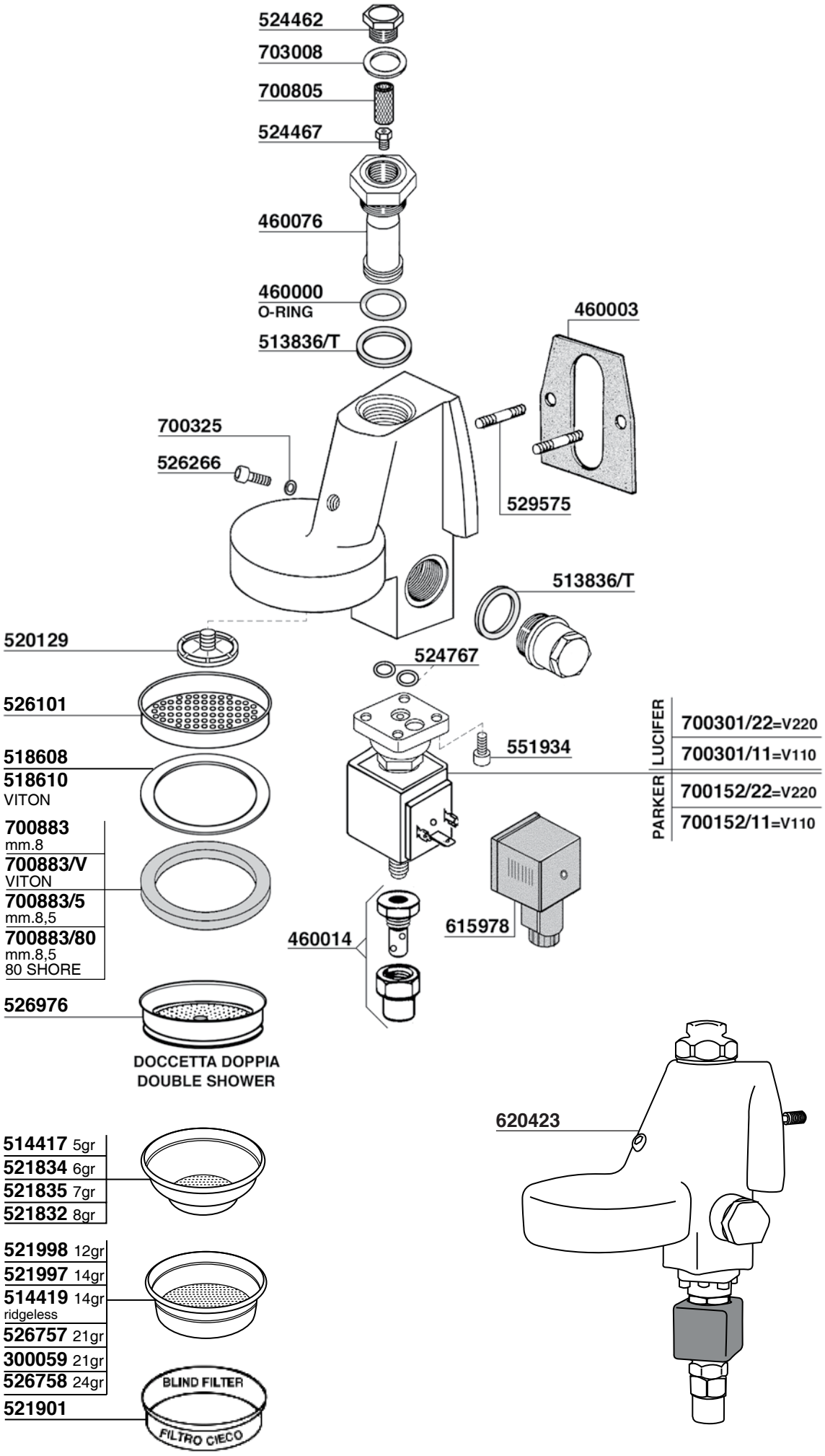
524462
703008
700805
524467
460076
460000
O-RING
513836/T
460003
700325
526266
529575
513836/T
520129
524767
526101
551934
518608
518610
VITON
700883
mm.8
700883/V
VITON
700883/5
mm.8,5
700883/80
mm.8,5
80 SHORE
526976
460014
615978
LUCIFER
700301/22=V220
700301/11=V110
PARKER
700152/22=V220
700152/11=V110
DOCCETTA DOPPIA
DOUBLE SHOWER
620423
514417 5gr
521834 6gr
521835 7gr
521832 8gr
521998 12gr
521997 14gr
514419 14gr
ridgeless
526757 21gr
300059 21gr
526758 24gr
521901
BLIND FILTER
FILTRO CIECO

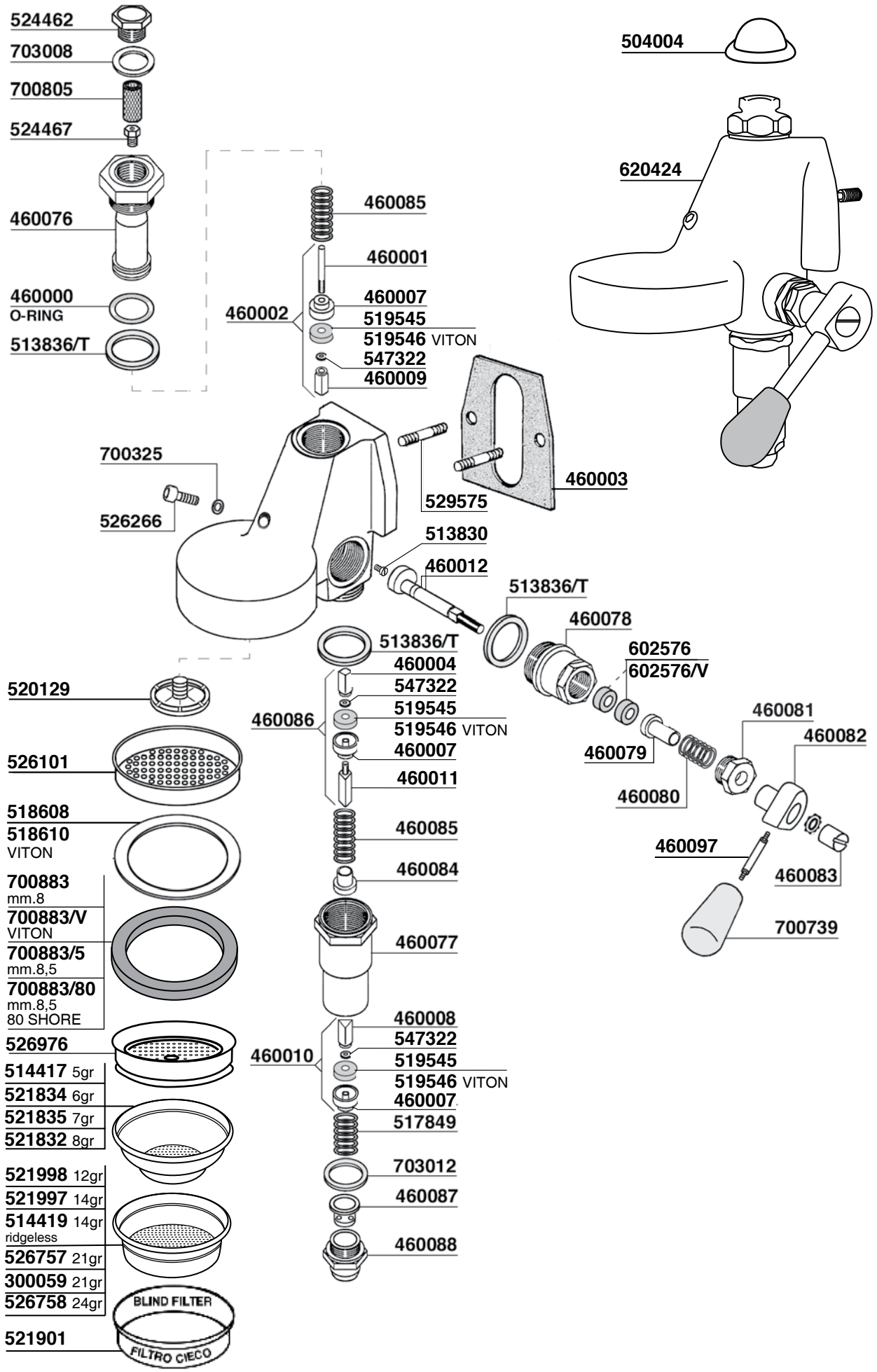
524462
703008
700805
524467
460076
460000
O-RING
513836/T
460085
460001
460002
460007
519545
519546 VITON
547322
460009
504004
620424
700325
526266
529575
460003
513830
460012
513836/T
460078
602576
602576/V
460081
460082
460079
460080
460097
460083
700739
513836/T
460004
547322
519545
460086
519546 VITON
460007
460011
460085
460084
460077
520129
526101
518608
518610
VITON
700883
mm.8
700883/V
VITON
700883/5
mm.8,5
700883/80
mm.8,5
80 SHORE
526976
514417 5gr
521834 6gr
521835 7gr
521832 8gr
521998 12gr
521997 14gr
514419 14gr
ridgeless
526757 21gr
300059 21gr
526758 24gr
521901
BLIND FILTER
FILTRO CIECO
460008
547322
460010
519545
519546 VITON
460007
517849
703012
460087
460088

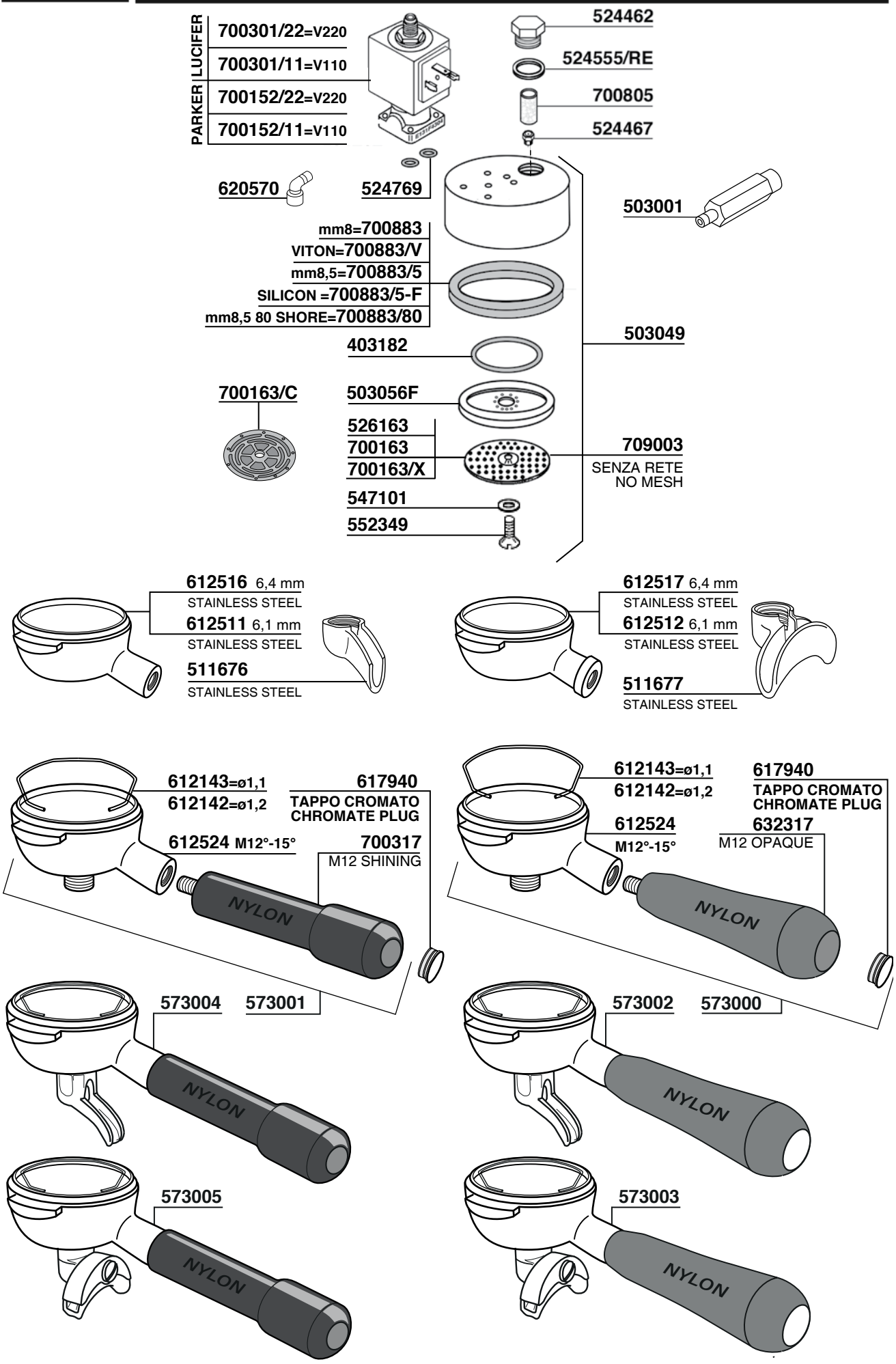
PARKER LUCIFER
700301/22=V220
700301/11=V110
700152/22=V220
700152/11=V110
524462
524555/RE
700805
524467
620570
524769
503001
mm8=700883
VITON=700883/V
mm8,5=700883/5
SILICON =700883/5-F
mm8,5 80 SHORE=700883/80
403182
503049
700163/C
503056F
526163
700163
700163/X
709003
SENZA RETE
NO MESH
547101
552349
612516 6,4 mm
STAINLESS STEEL
612511 6,1 mm
STAINLESS STEEL
511676
STAINLESS STEEL
612517 6,4 mm
STAINLESS STEEL
612512 6,1 mm
STAINLESS STEEL
511677
STAINLESS STEEL
612143=ø1,1
612142=ø1,2
617940
TAPPO CROMATO
CHROMATE PLUG
612524 M12°-15°
700317
M12 SHINING
NYLON
612143=ø1,1
612142=ø1,2
617940
TAPPO CROMATO
CHROMATE PLUG
612524
M12°-15°
632317
M12 OPAQUE
NYLON
573004
573001
NYLON
573002
573000
NYLON
573005
NYLON
573003
NYLON

SANREMO

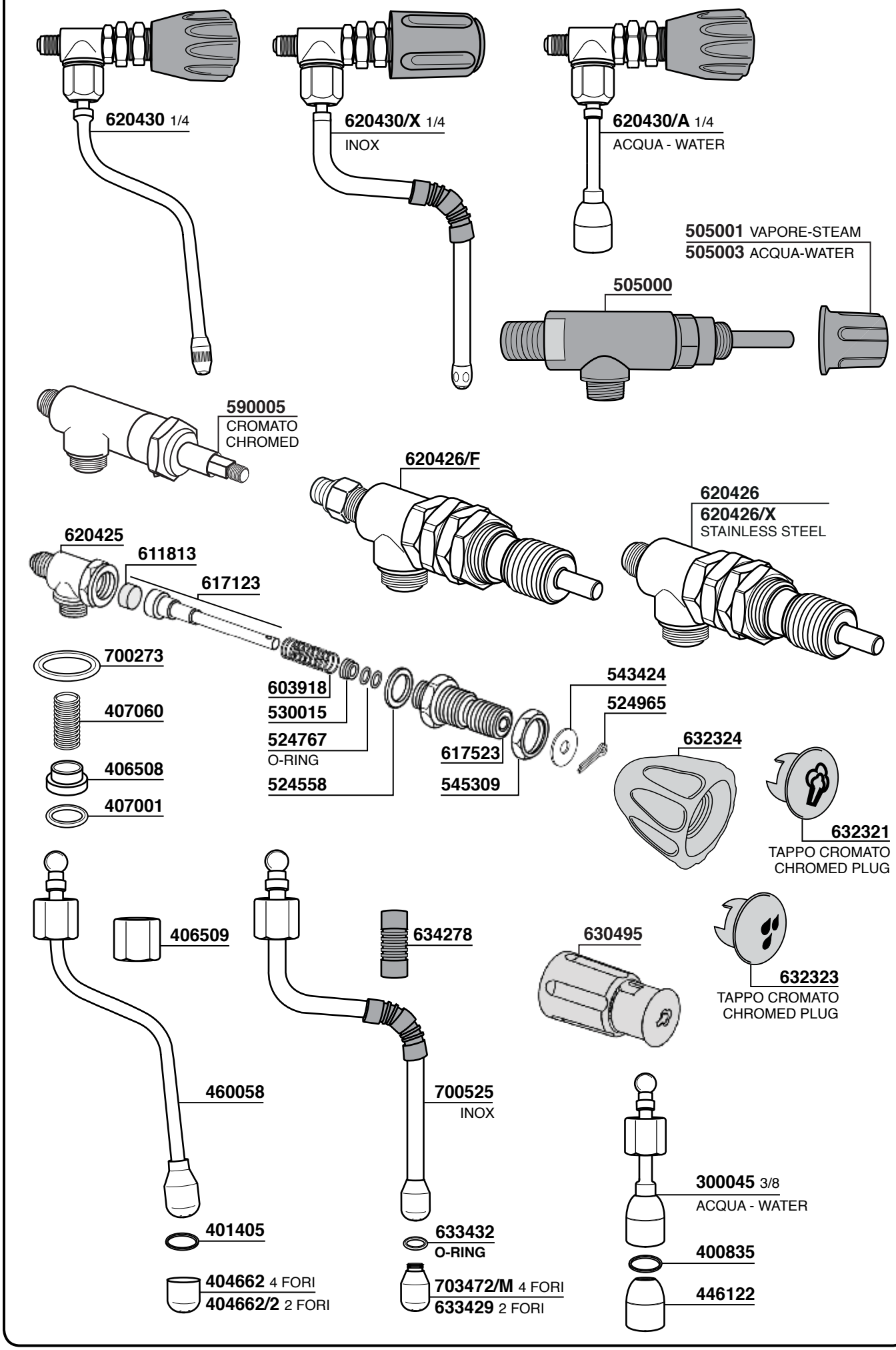
620430 1/4
620430/X 1/4
INOX
620430/A 1/4
ACQUA - WATER
505001 VAPORE-STEAM
505003 ACQUA-WATER
505000
590005
CROMATO
CHROMED
620426/F
620426
620426/X
STAINLESS STEEL
620425
611813
617123
700273
407060
406508
407001
603918
530015
524767
O-RING
524558
617523
545309
543424
524965
632324
632321
TAPPO CROMATO
CHROMED PLUG
406509
634278
630495
632323
TAPPO CROMATO
CHROMED PLUG
460058
700525
INOX
401405
633432
O-RING
404662 4 FORI
404662/2 2 FORI
703472/M 4 FORI
633429 2 FORI
300045 3/8
ACQUA - WATER
400835
446122

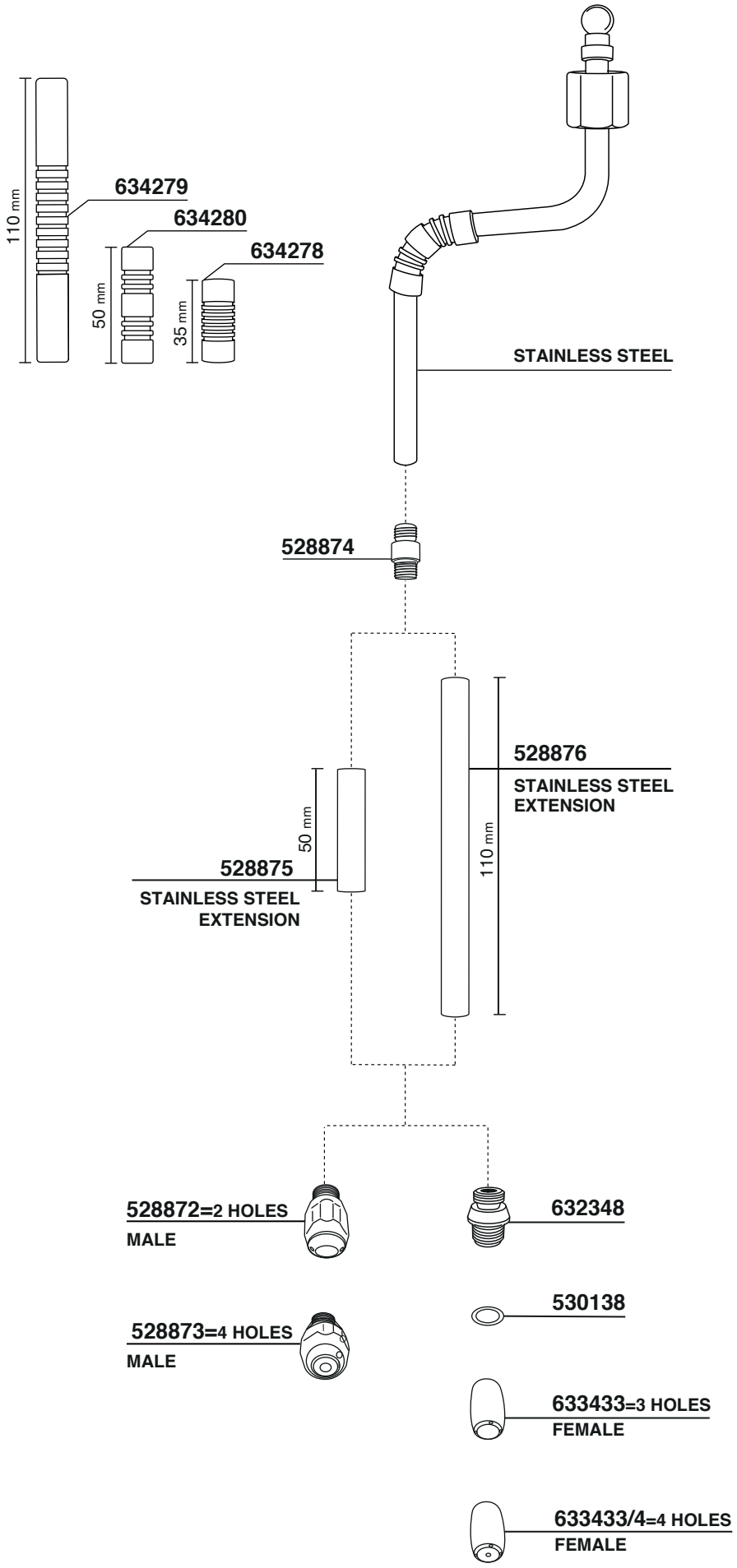
110 mm
634279
634280
50 mm
634278
35 mm
STAINLESS STEEL
528874
528876
STAINLESS STEEL
EXTENSION
50 mm
110 mm
528875
STAINLESS STEEL
EXTENSION
528872=2 HOLES
MALE
632348
530138
528873=4 HOLES
MALE
633433=3 HOLES
FEMALE
633433/4=4 HOLES
FEMALE

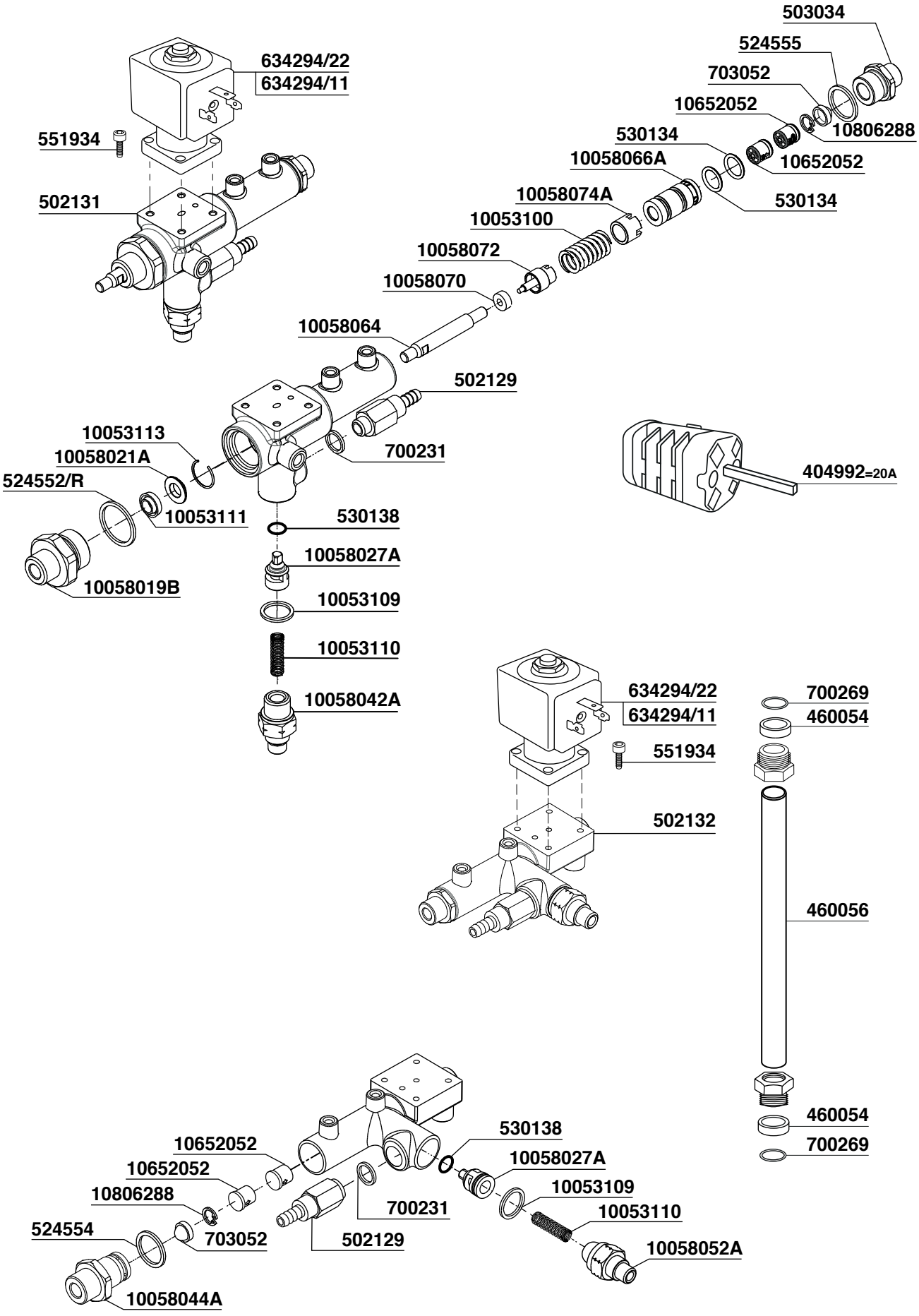
503034
524555
703052
10652052
10806288
530134
10652052
10058066A
530134
10058074A
10053100
10058072
10058070
634294/22
634294/11
551934
502131
10058064
502129
10053113
10058021A
700231
524552/R
10053111
530138
10058027A
10058019B
10053109
10053110
10058042A
404992=20A
634294/22
634294/11
551934
502132
700269
460054
460056
460054
700269
530138
10652052
10058027A
10652052
10053109
10806288
700231
10053110
524554
703052
502129
10058052A
10058044A

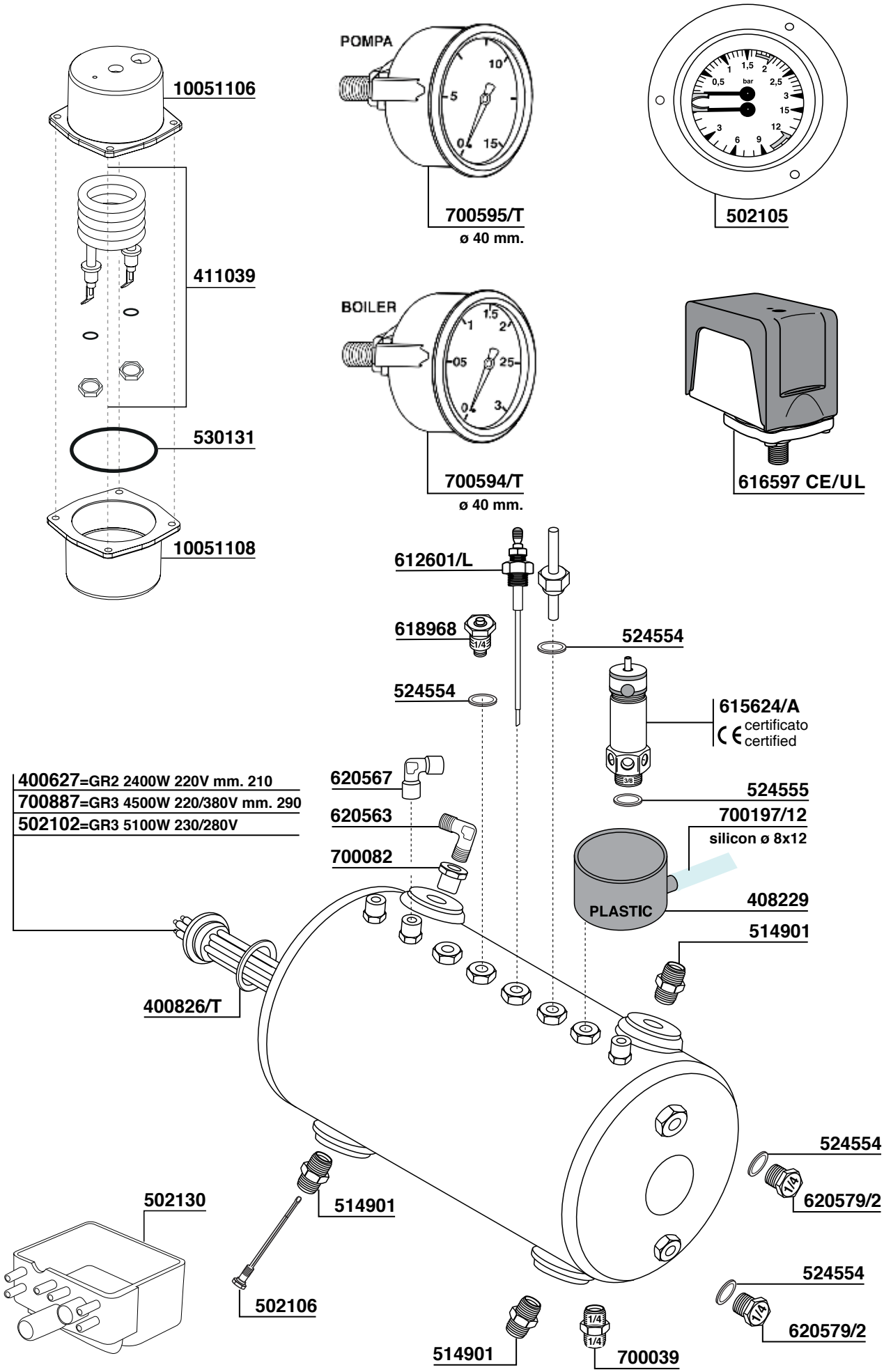
10051106
411039
530131
10051108
POMPA
700595/T
ø 40 mm.
502105
BOILER
700594/T
ø 40 mm.
616597 CE/UL
612601/L
618968
524554
524554
615624/A
certificato
certified
524555
700197/12
silicon ø 8x12
408229
PLASTIC
514901
400627=GR2 2400W 220V mm. 210
700887=GR3 4500W 220/380V mm. 290
502102=GR3 5100W 230/280V
620567
620563
700082
400826/T
524554
620579/2
502130
514901
502106
524554
620579/2
514901
700039

SANREMO

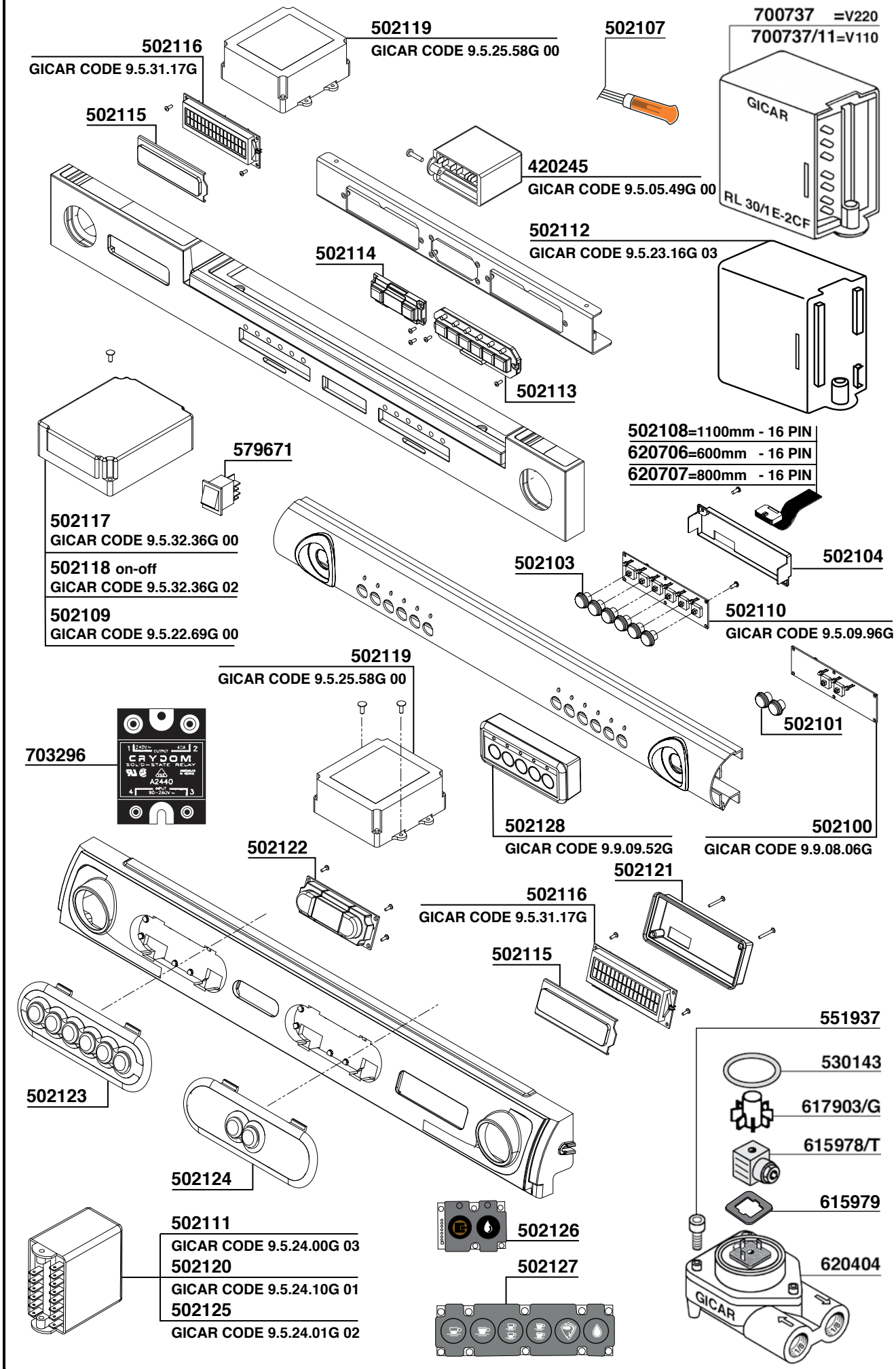
502119
GICAR CODE 9.5.25.58G 00
502116
GICAR CODE 9.5.31.17G
502107
700737 =V220
700737/11=V110
GICAR
RL 30/1 E-2CF
502115
420245
GICAR CODE 9.5.05.49G 00
502112
GICAR CODE 9.5.23.16G 03
502114
502113
502108=1100mm - 16 PIN
620706=600mm - 16 PIN
620707=800mm - 16 PIN
579671
502117
GICAR CODE 9.5.32.36G 00
502118 on-off
GICAR CODE 9.5.32.36G 02
502109
GICAR CODE 9.5.22.69G 00
502104
502103
502110
GICAR CODE 9.5.09.96G
502119
GICAR CODE 9.5.25.58G 00
502101
703296
CRYDOM
SOLID-STATE RELAY
A2440
502128
GICAR CODE 9.9.09.52G
502100
GICAR CODE 9.9.08.06G
502122
502121
502116
GICAR CODE 9.5.31.17G
502115
551937
530143
617903/G
615978/T
615979
620404
GICAR
502123
502124
502111
GICAR CODE 9.5.24.00G 03
502120
GICAR CODE 9.5.24.10G 01
502125
GICAR CODE 9.5.24.01G 02
502126
502127

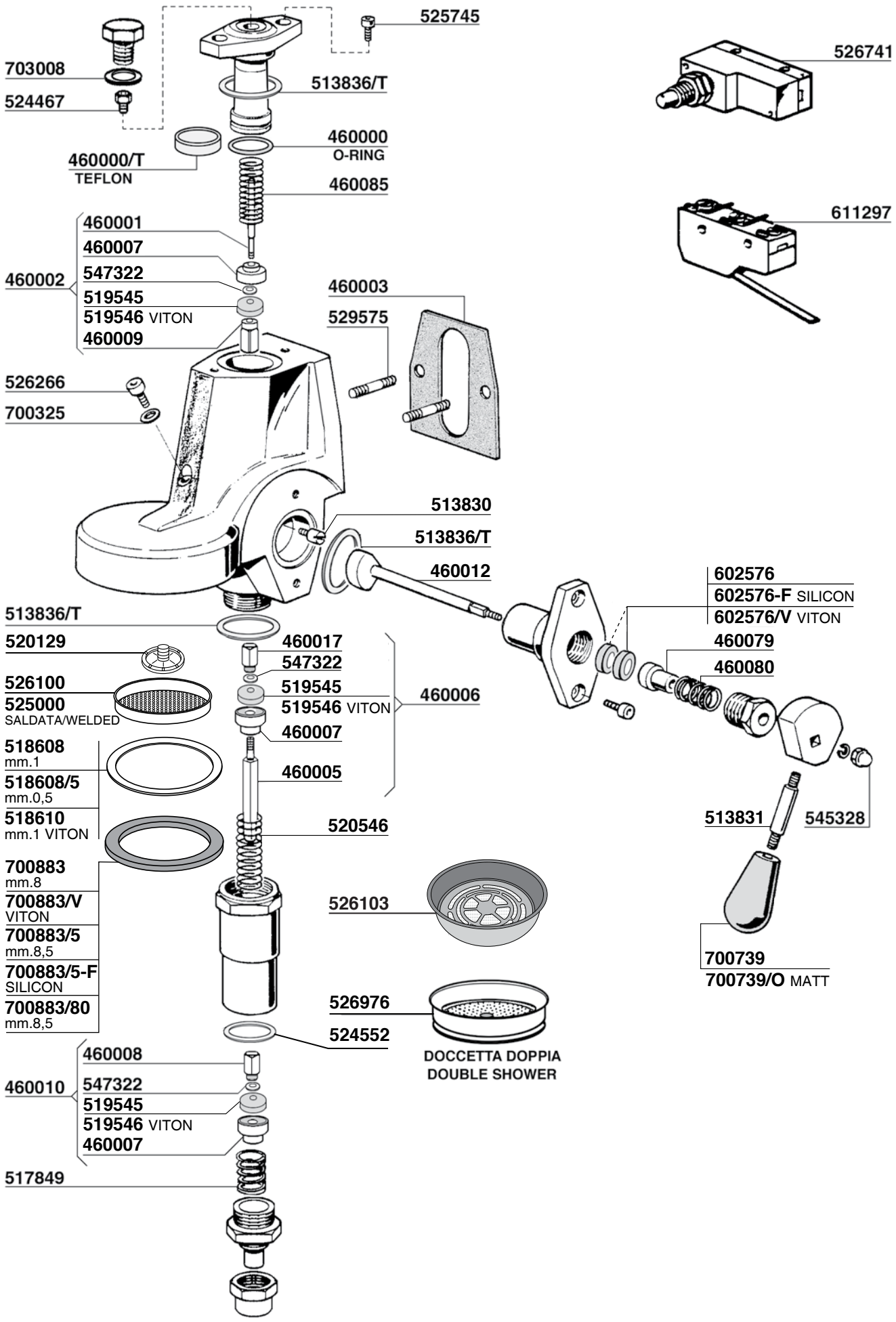
525745
703008
524467
513836/T
526741
460000
O-RING
460000/T
TEFLON
460085
611297
460001
460007
547322
460002
519545
519546 VITON
460009
460003
529575
526266
700325
513830
513836/T
460012
602576
602576-F SILICON
602576/V VITON
513836/T
520129
460017
547322
460079
460080
526100
525000
SALDATA/WELDED
519545
519546 VITON
460006
460007
518608
mm.1
518608/5
mm.0,5
518610
mm.1 VITON
460005
520546
513831
545328
700883
mm.8
700883/V
VITON
700883/5
mm.8,5
700883/5-F
SILICON
700883/80
mm.8,5
526103
700739
700739/O MATT
526976
524552
DOCCETTA DOPPIA
DOUBLE SHOWER
460008
460010
547322
519545
519546 VITON
460007
517849

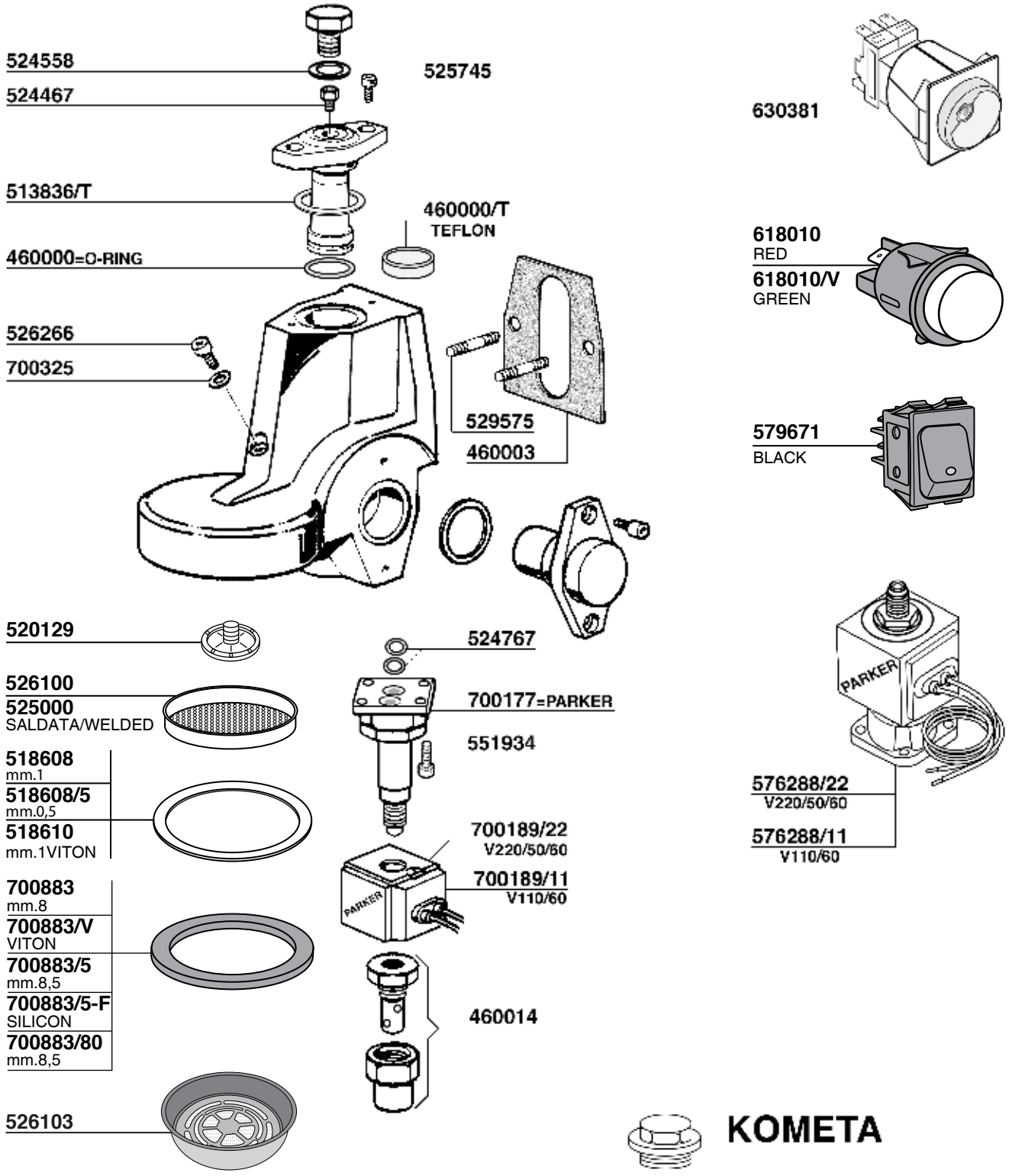
524558
524467
525745
513836/T
460000/T
TEFLON
460000=O-RING
526266
700325
529575
460003
630381
618010
RED
618010/V
GREEN
579671
BLACK
520129
524767
526100
525000
SALDATA/WELDED
700177=PARKER
551934
518608
mm.1
518608/5
mm.0,5
518610
mm.1VITON
700189/22
V220/50/60
700189/11
V110/60
PARKER
576288/22
V220/50/60
576288/11
V110/60
700883
mm.8
700883/V
VITON
700883/5
mm.8,5
700883/5-F
SILICON
700883/80
mm.8,5
460014
526103

KOMETA

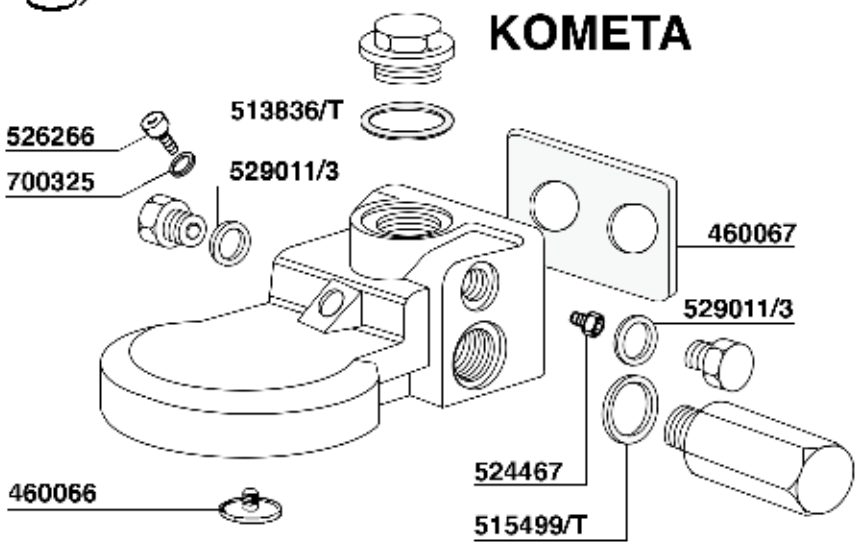
513836/T
526266
700325
529011/3
460067
529011/3
524467
460066
515499/T

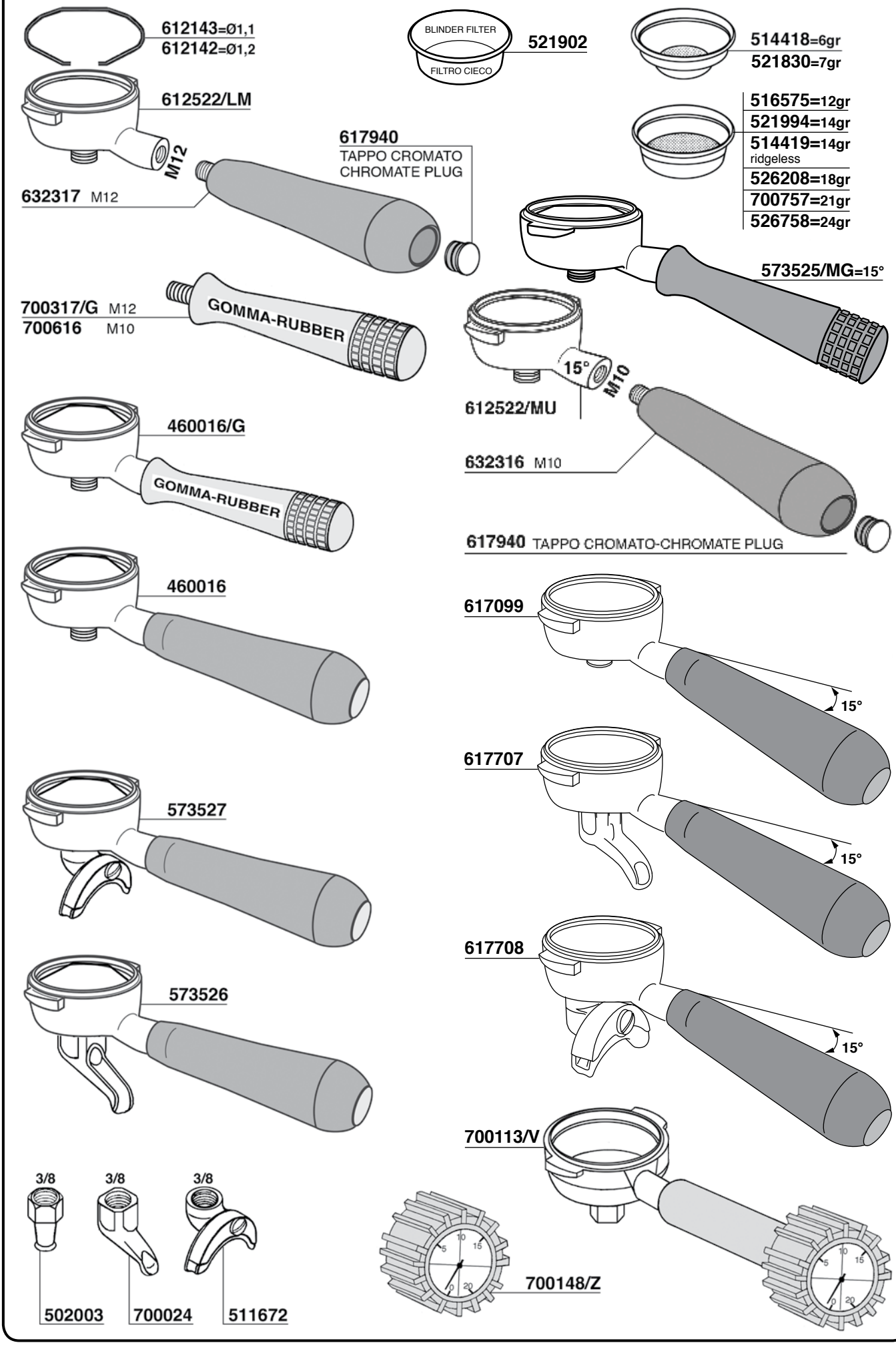
612143=Ø1,1
612142=Ø1,2
612522/LM
M12
632317 M12
617940
TAPPO CROMATO
CHROMATE PLUG
700317/G M12
700616 M10
GOMMA-RUBBER
460016/G
GOMMA-RUBBER
460016
573527
573526
3/8
3/8
3/8
502003
700024
511672
BLINDER FILTER
FILTRO CIECO
521902
514418=6gr
521830=7gr
516575=12gr
521994=14gr
514419=14gr
ridgeless
526208=18gr
700757=21gr
526758=24gr
573525/MG=15°
15°
M10
612522/MU
632316 M10
617940 TAPPO CROMATO-CHROMATE PLUG
617099
15°
617707
15°
617708
15°
700113/V
700148/Z

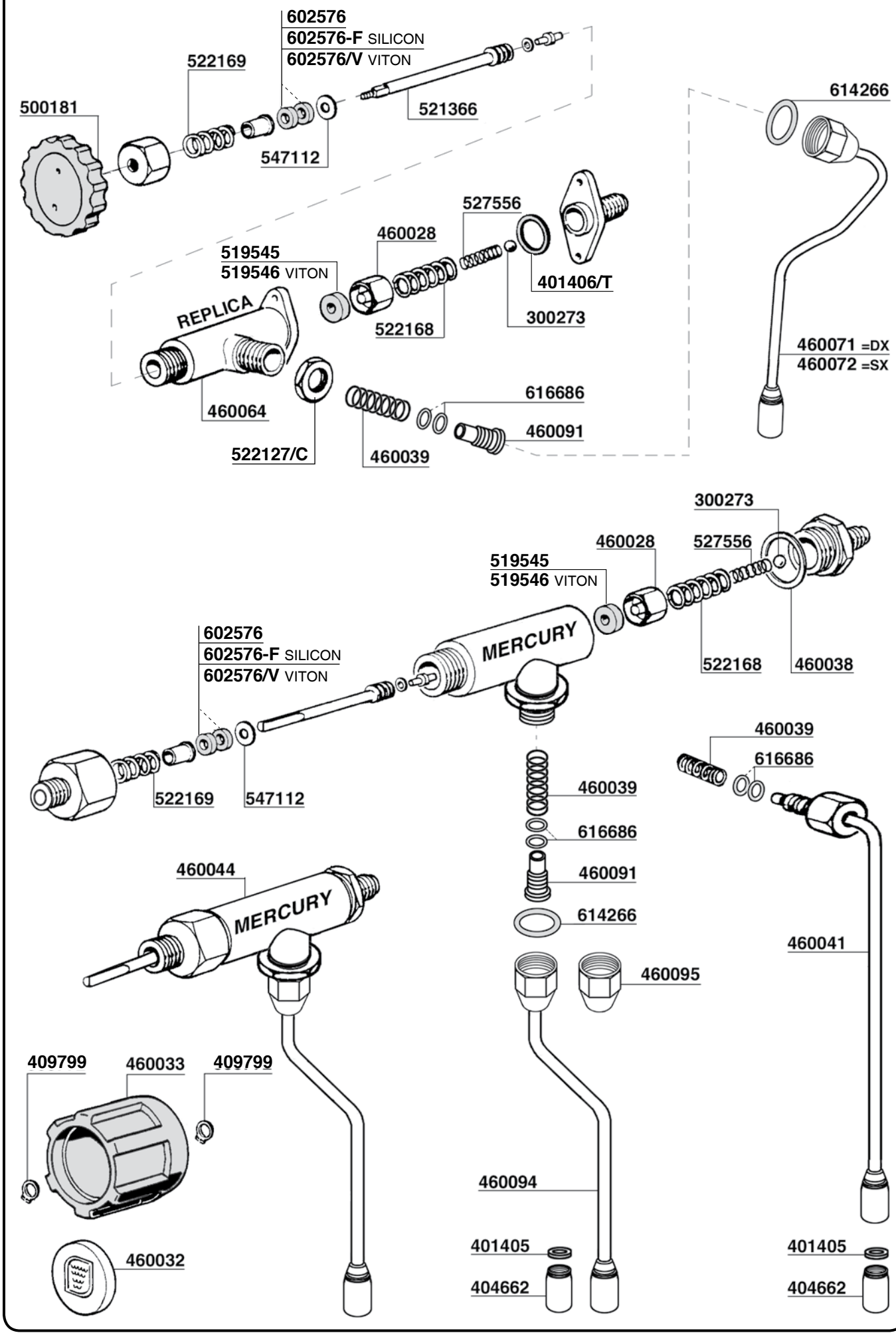
602576
602576-F SILICON
602576/V VITON
522169
500181
521366
547112
614266
527556
460028
519545
519546 VITON
401406/T
REPLICA
522168
300273
460071 =DX
460072 =SX
616686
460064
460091
522127/C
460039
300273
460028
527556
519545
519546 VITON
MERCURY
602576
602576-F SILICON
602576/V VITON
522168
460038
460039
616686
522169
547112
460039
616686
460091
614266
460044
MERCURY
460041
460095
409799
460033
409799
460094
401405
404662
460032
401405
404662

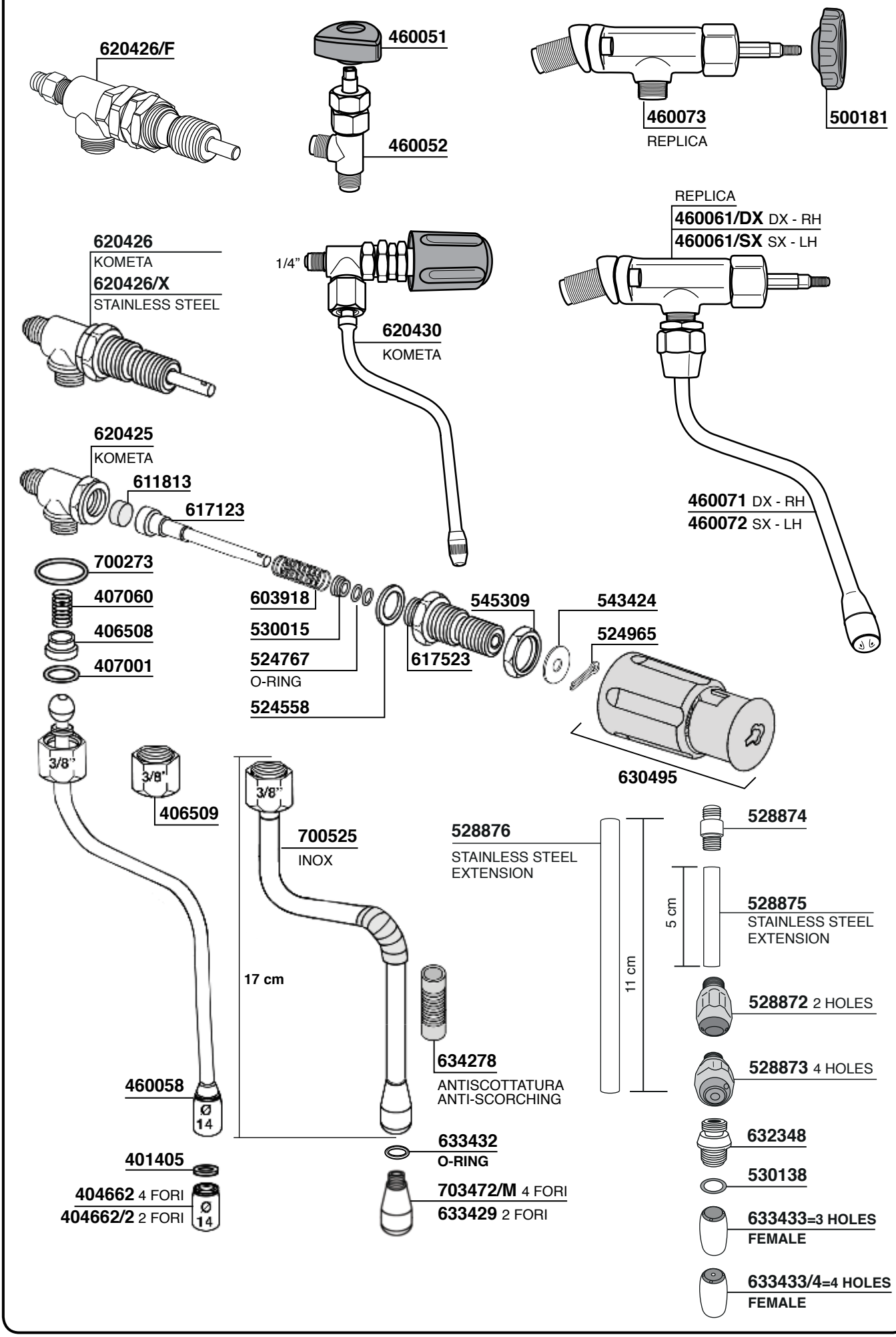
620426/F
460051
460052
460073
REPLICA
500181
REPLICA
460061/DX DX - RH
460061/SX SX - LH
620426
KOMETA
620426/X
STAINLESS STEEL
1/4"
620430
KOMETA
620425
KOMETA
611813
617123
460071 DX - RH
460072 SX - LH
700273
407060
406508
407001
603918
530015
524767
O-RING
524558
617523
545309
543424
524965
630495
3/8"
406509
700525
INOX
528876
STAINLESS STEEL
EXTENSION
528874
5 cm
528875
STAINLESS STEEL
EXTENSION
11 cm
17 cm
528872 2 HOLES
528873 4 HOLES
634278
ANTISCOTTATURA
ANTI-SCORCHING
460058
Ø 14
633432
O-RING
632348
530138
401405
404662 4 FORI
404662/2 2 FORI
703472/M 4 FORI
633429 2 FORI
633433=3 HOLES
FEMALE
633433/4=4 HOLES
FEMALE

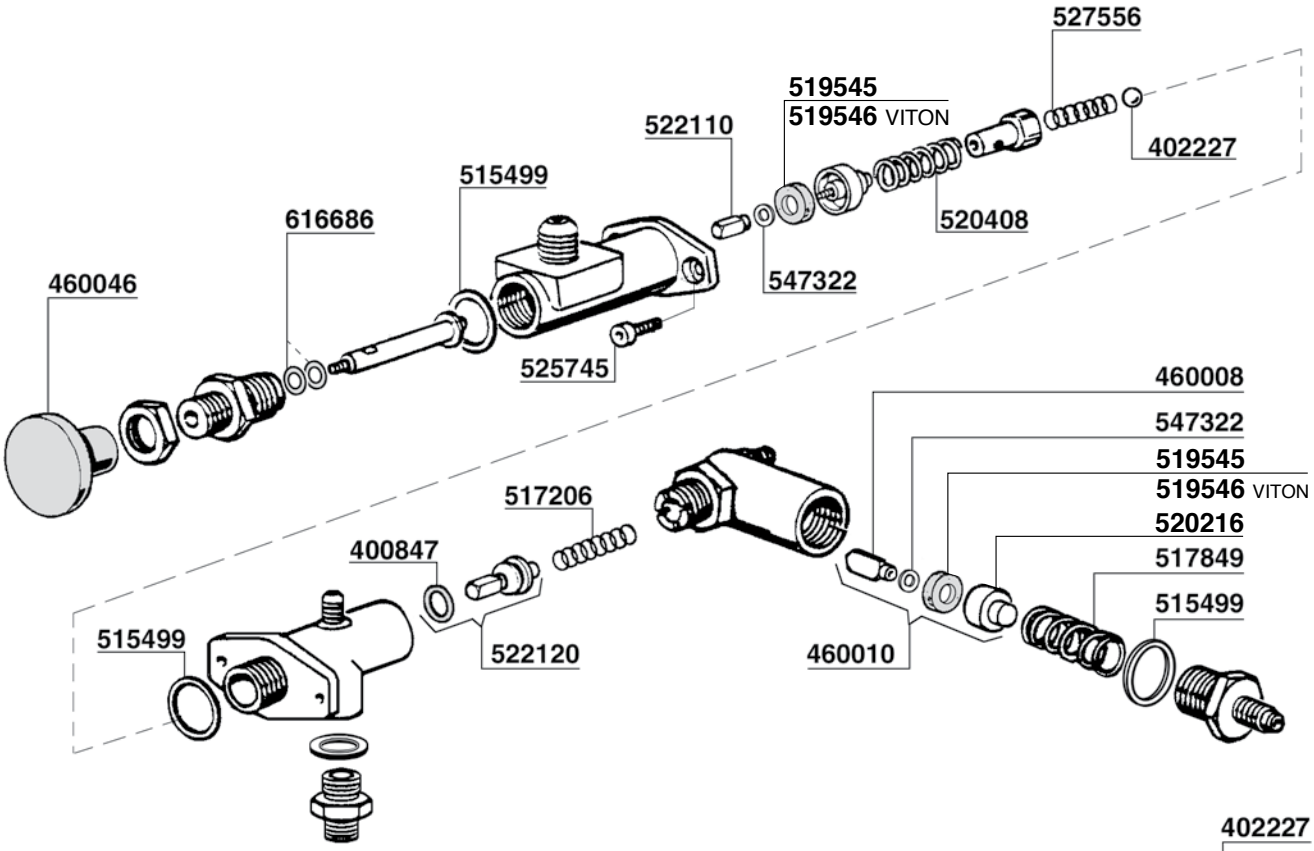
527556
519545
519546 VITON
522110
402227
515499
520408
616686
547322
460046
525745
460008
547322
519545
519546 VITON
517206
520216
400847
517849
515499
515499
522120
460010

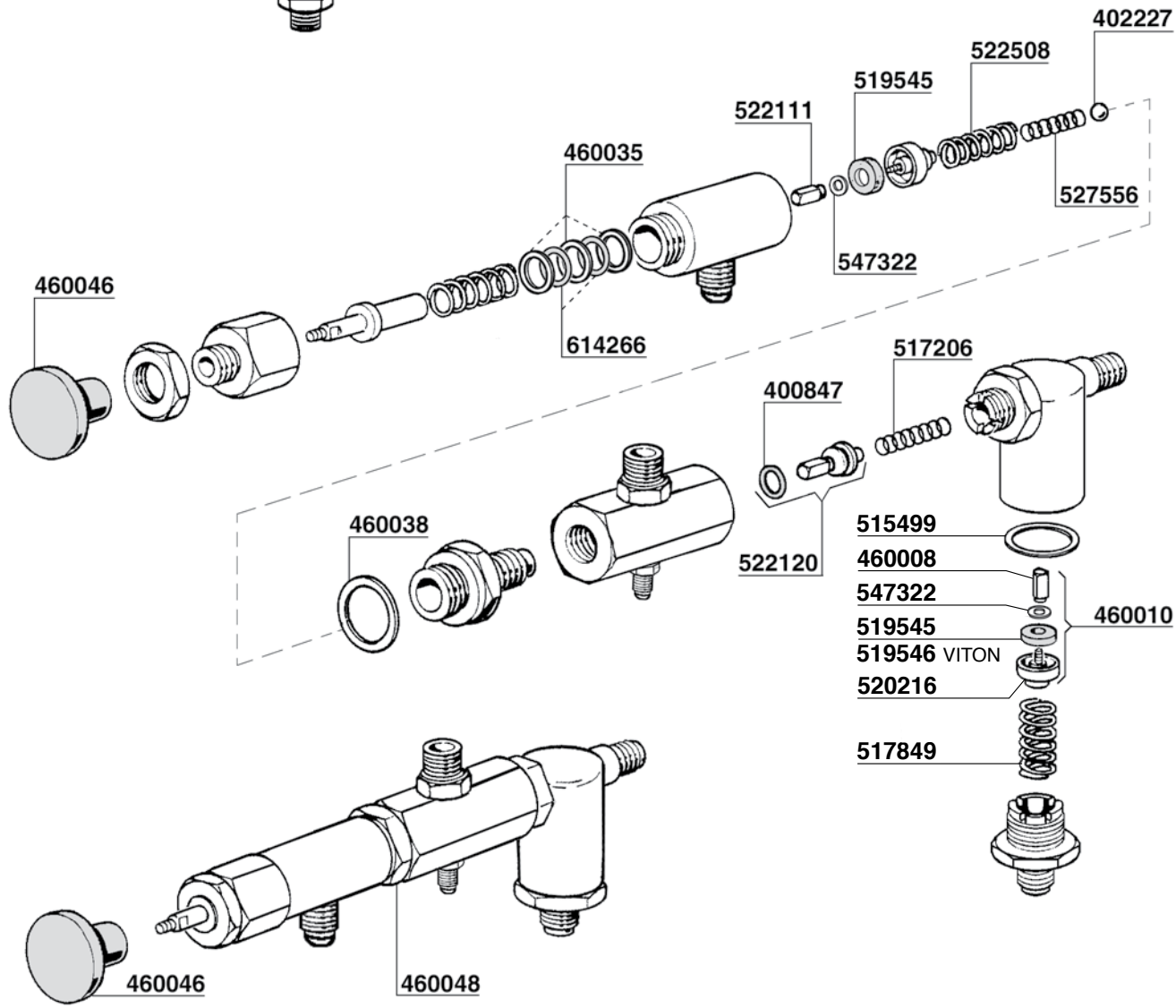
402227
522508
519545
522111
460035
527556
547322
460046
614266
517206
400847
460038
515499
522120
460008
547322
460010
519545
519546 VITON
520216
517849
460046
460048

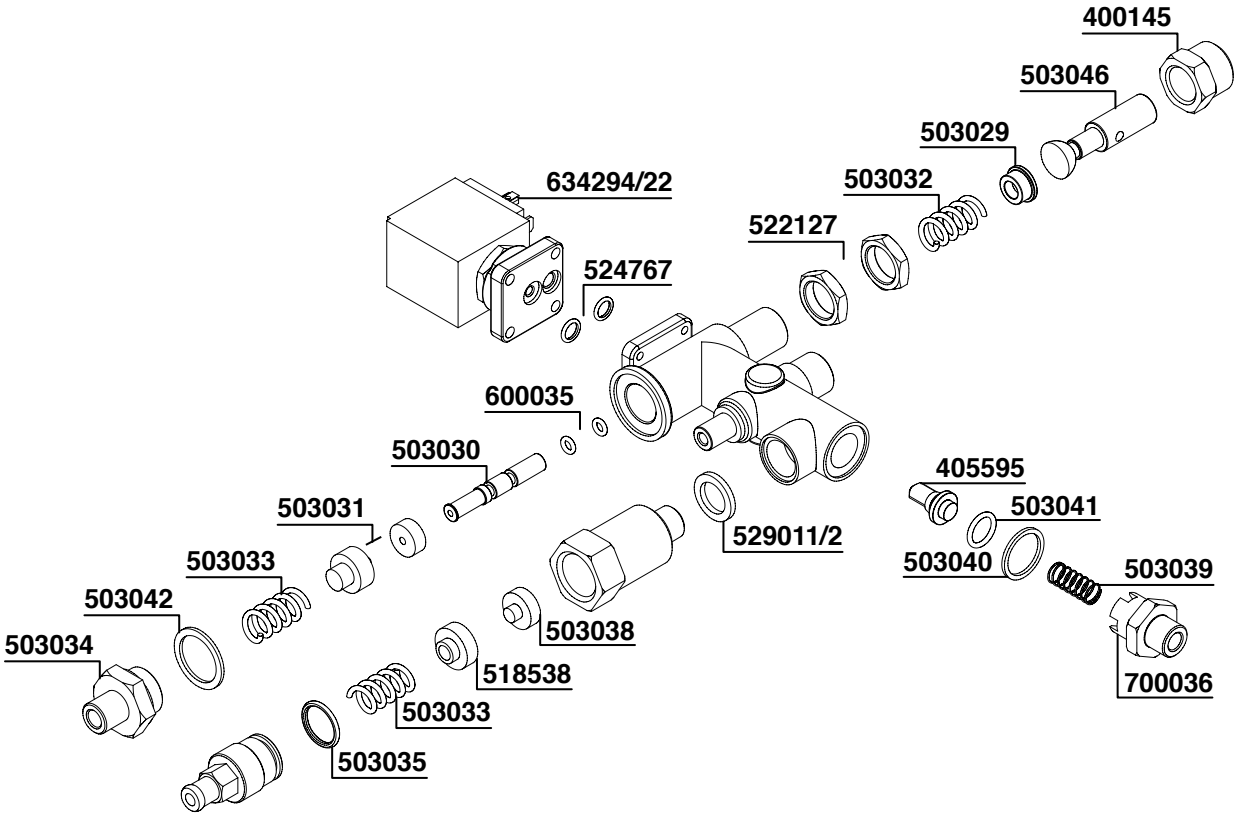
400145
503046
503029
503032
522127
634294/22
524767
600035
503030
503031
503033
503042
503034
405595
503041
503040
503039
529011/2
503038
518538
503033
503035
700036

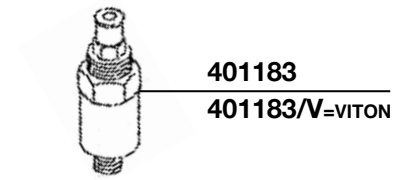
401183
401183/V=VITON

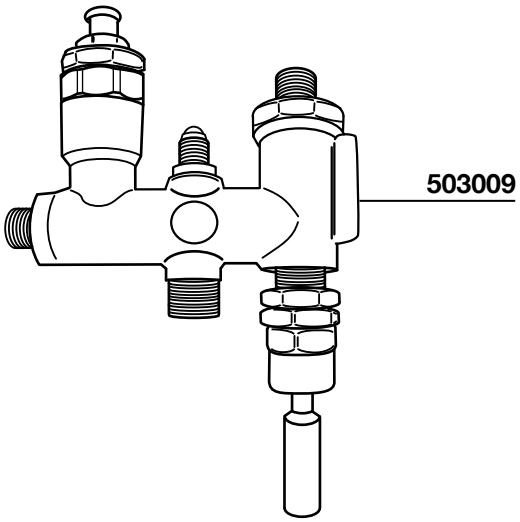
503009

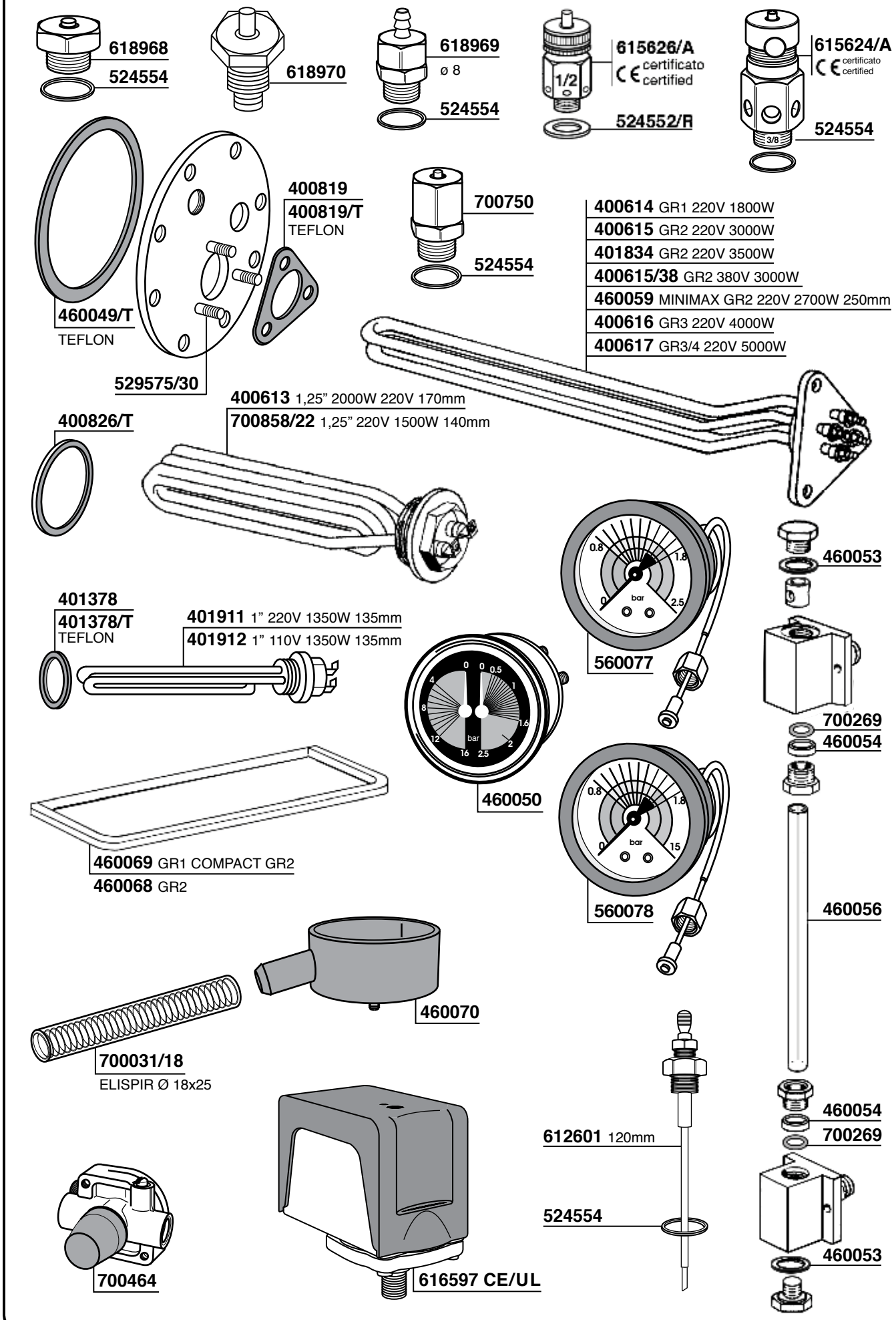
618968
524554
618970
618969
ø 8
524554
615626/A
certificato
certified
1/2
524552/R
615624/A
certificato
certified
3/8
524554
400819
400819/T
TEFLON
460049/T
TEFLON
529575/30
700750
524554
400614 GR1 220V 1800W
400615 GR2 220V 3000W
401834 GR2 220V 3500W
400615/38 GR2 380V 3000W
460059 MINIMAX GR2 220V 2700W 250mm
400616 GR3 220V 4000W
400617 GR3/4 220V 5000W
400613 1,25" 2000W 220V 170mm
700858/22 1,25" 220V 1500W 140mm
400826/T
401378
401378/T
TEFLON
401911 1" 220V 1350W 135mm
401912 1" 110V 1350W 135mm
0.8
1.8
0
2.5
bar
560077
460053
700269
460054
460050
0.8
1.8
0
15
bar
560078
460056
460069 GR1 COMPACT GR2
460068 GR2
460070
700031/18
ELISPIR Ø 18x25
460054
700269
612601 120mm
524554
460053
700464
616597 CE/UL

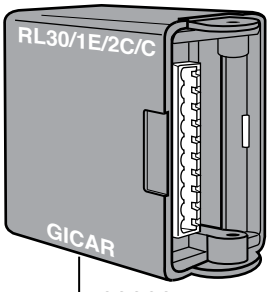

460062 220V
460062/11 110V

620709/10
CONNETTORE 10 PIN

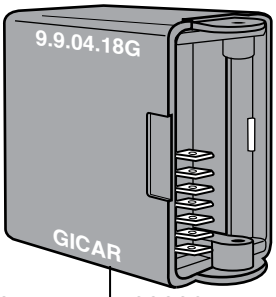

460029 GR2/3
DE LUX

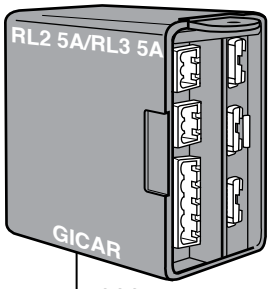

460075 GR1 220V
KOMETA

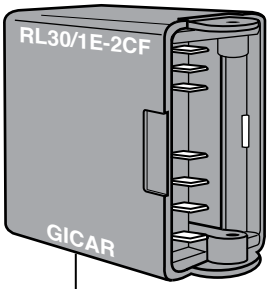

700737 220V
700737/11 110V

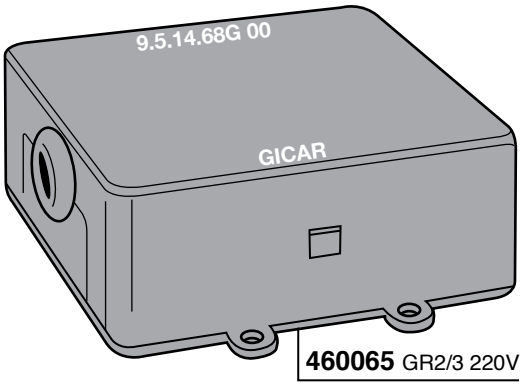

460065 GR2/3 220V
GICAR 3D

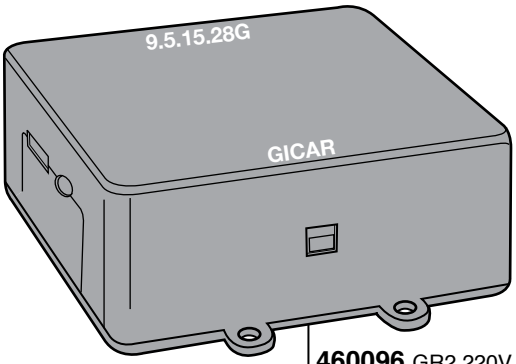

460096 GR2 220V
GICAR 3D5

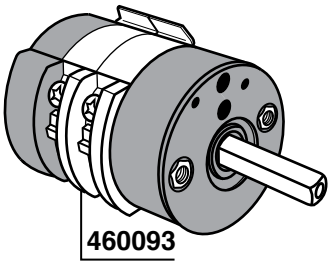

460093

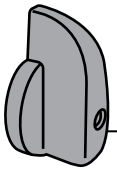

613656

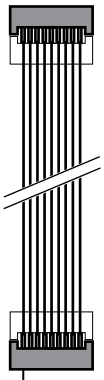

620714
8 pin 800 mm

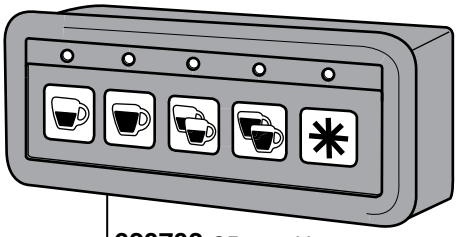

620702 GR1 220V
PULSANTIERA + CENTRALINA
TOUCH PAD + ELECTRONIC BOX

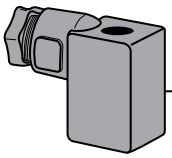

615978/T

615979

530143

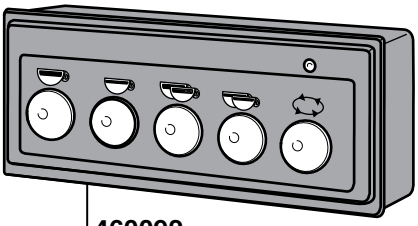

460092
PULSANTIERA - TOUCH PAD

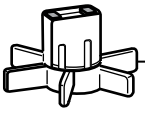

617903

551937

700621

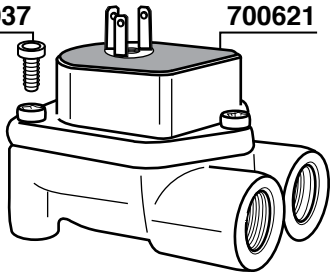

700869/22 220V
700869/11 110V

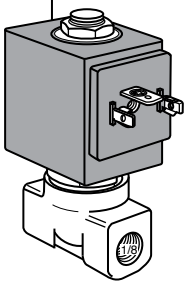

615978

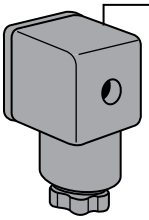

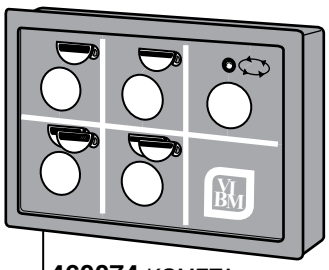

460074 KOMETA
PULSANTIERA - TOUCH PAD

VIBIEMME

DOMOBAR SUPER

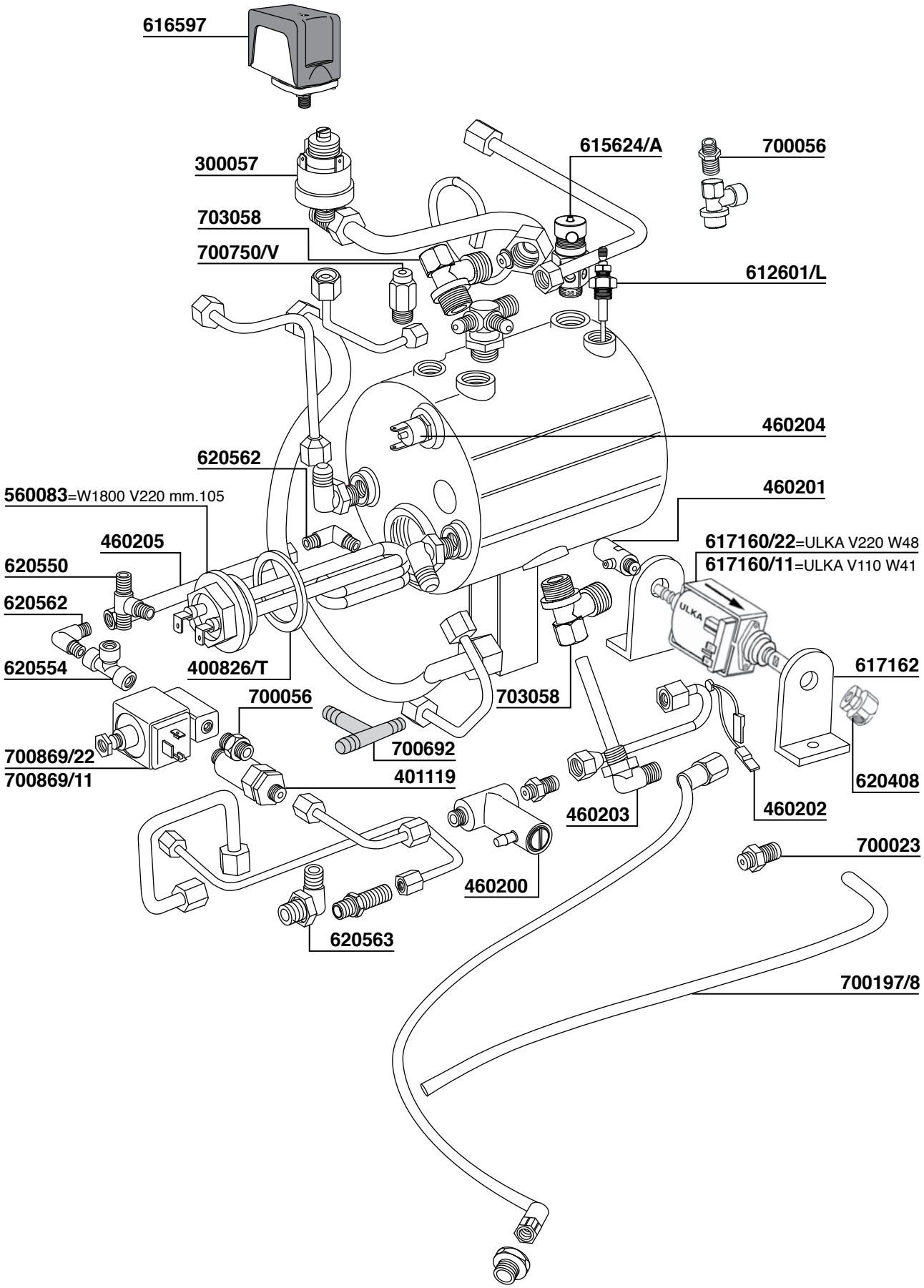

DOMOBAR SUPER

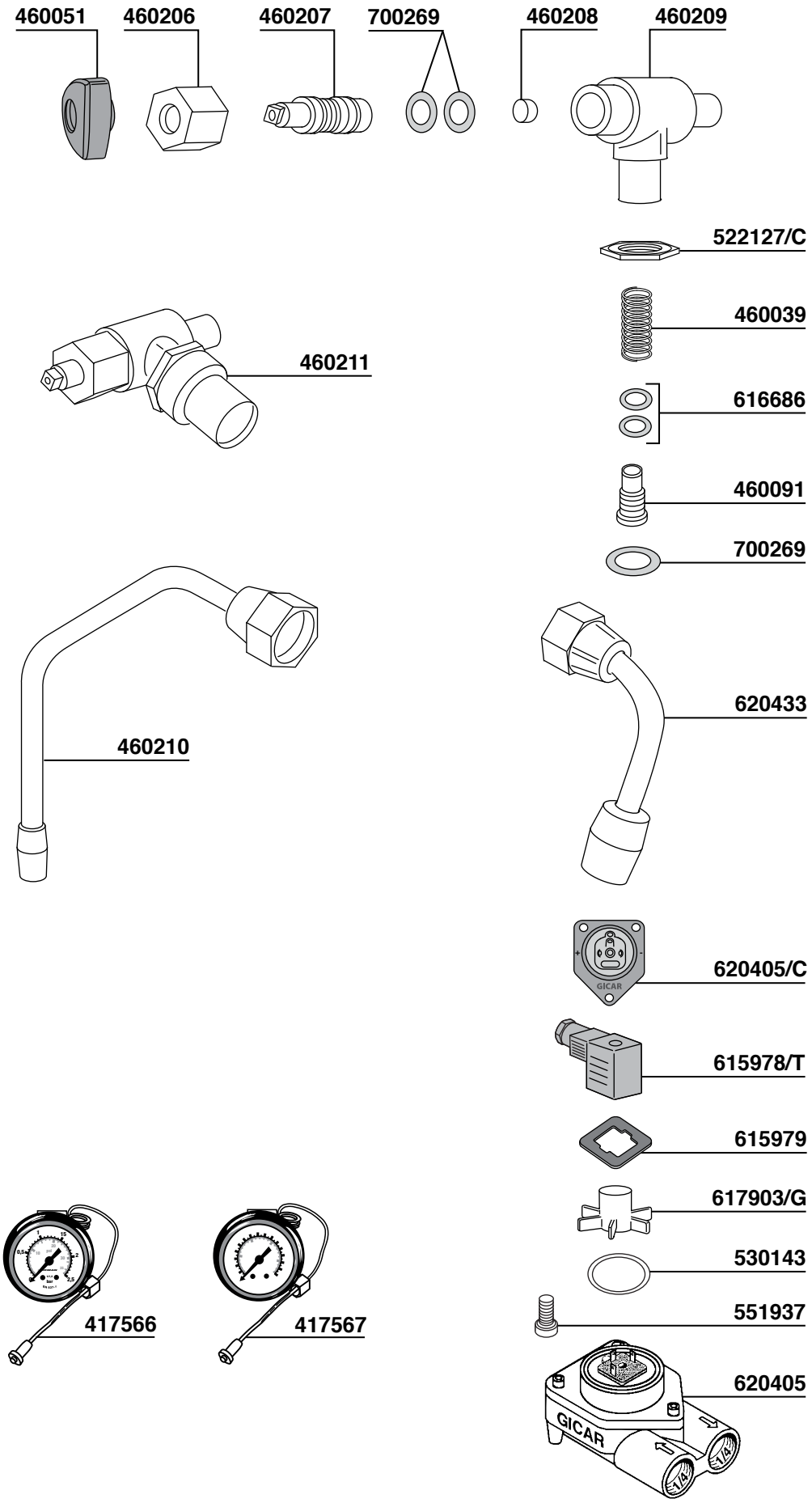

DOMOBAR CALDAIA VERTICALE

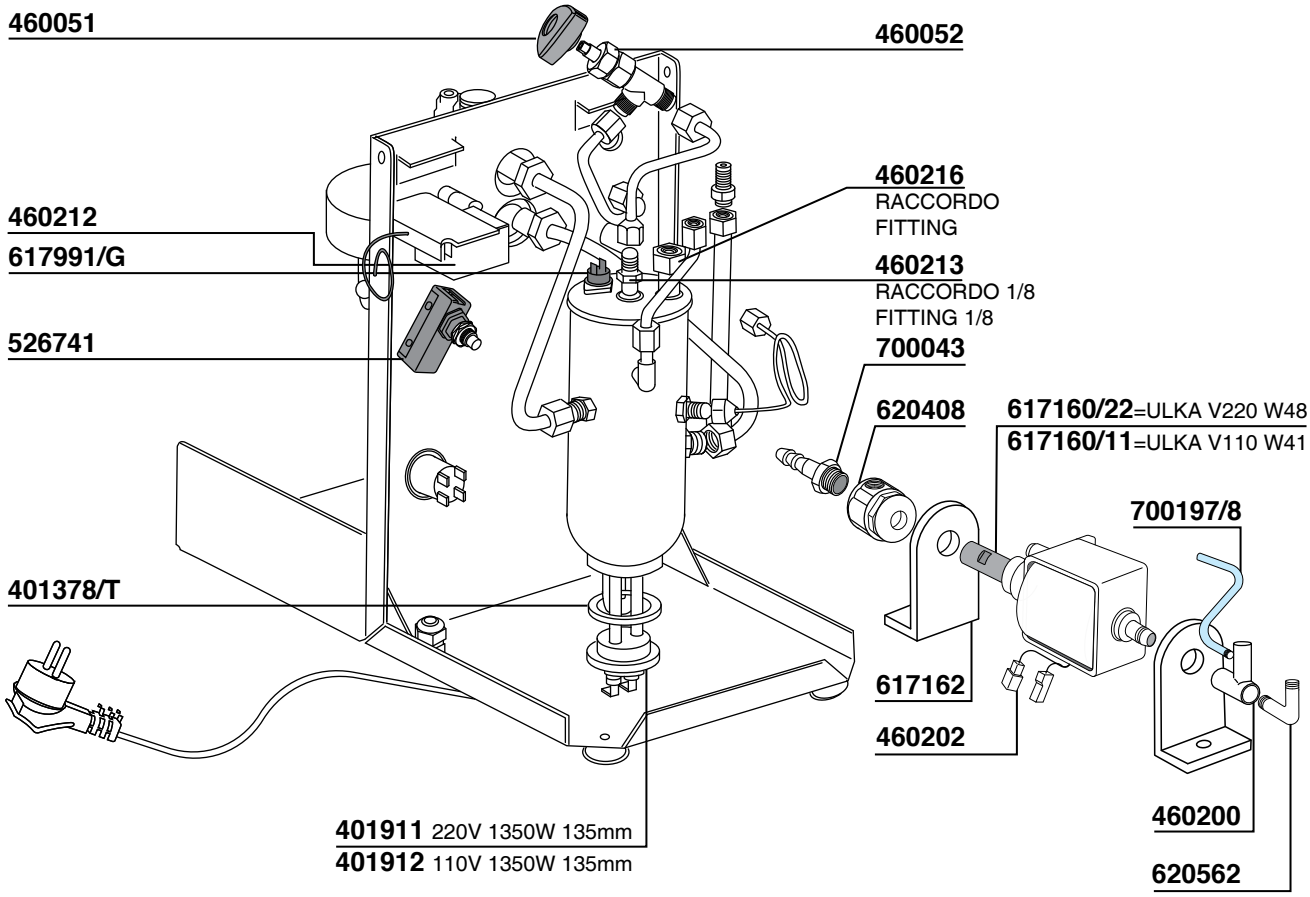

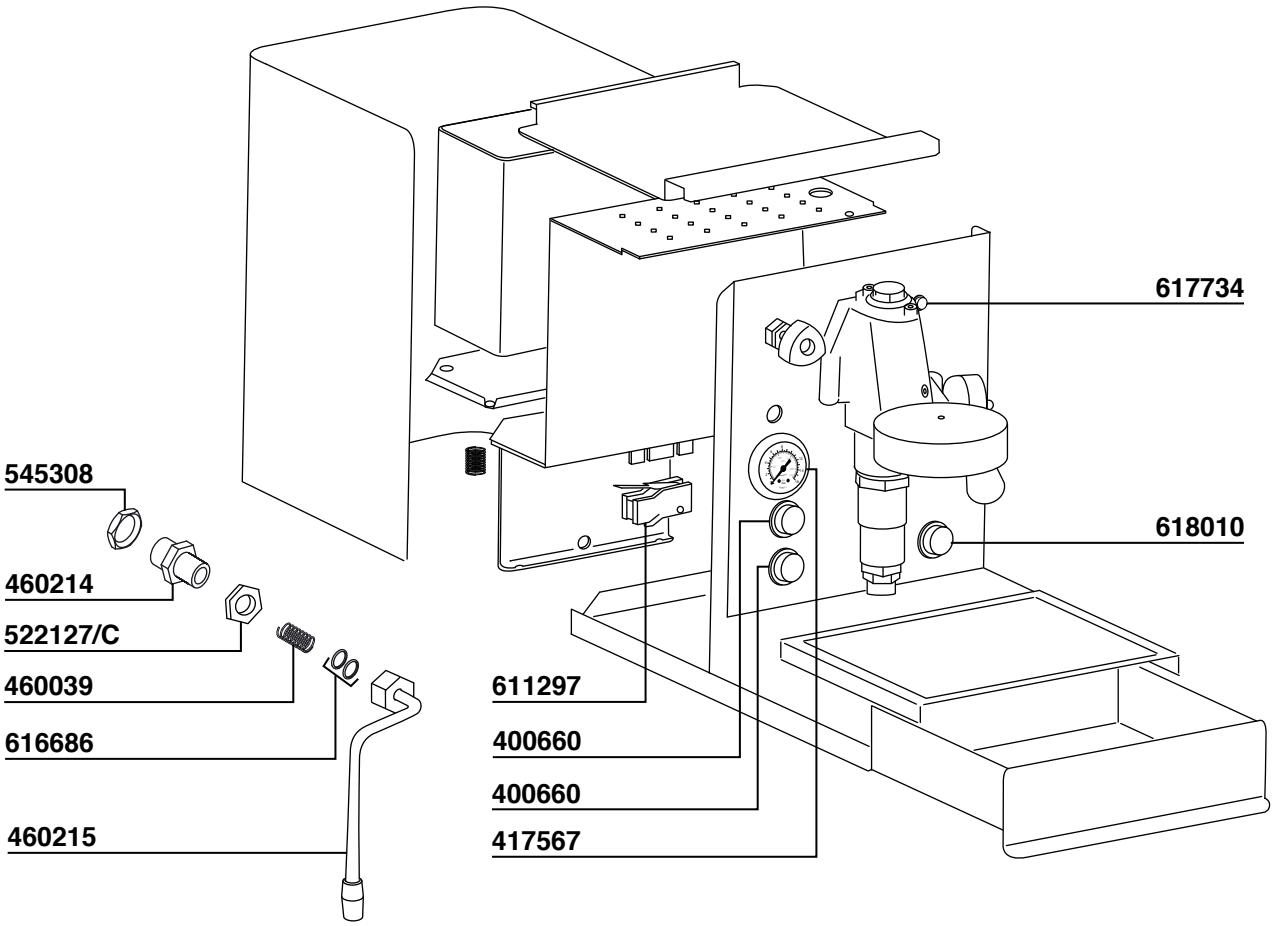

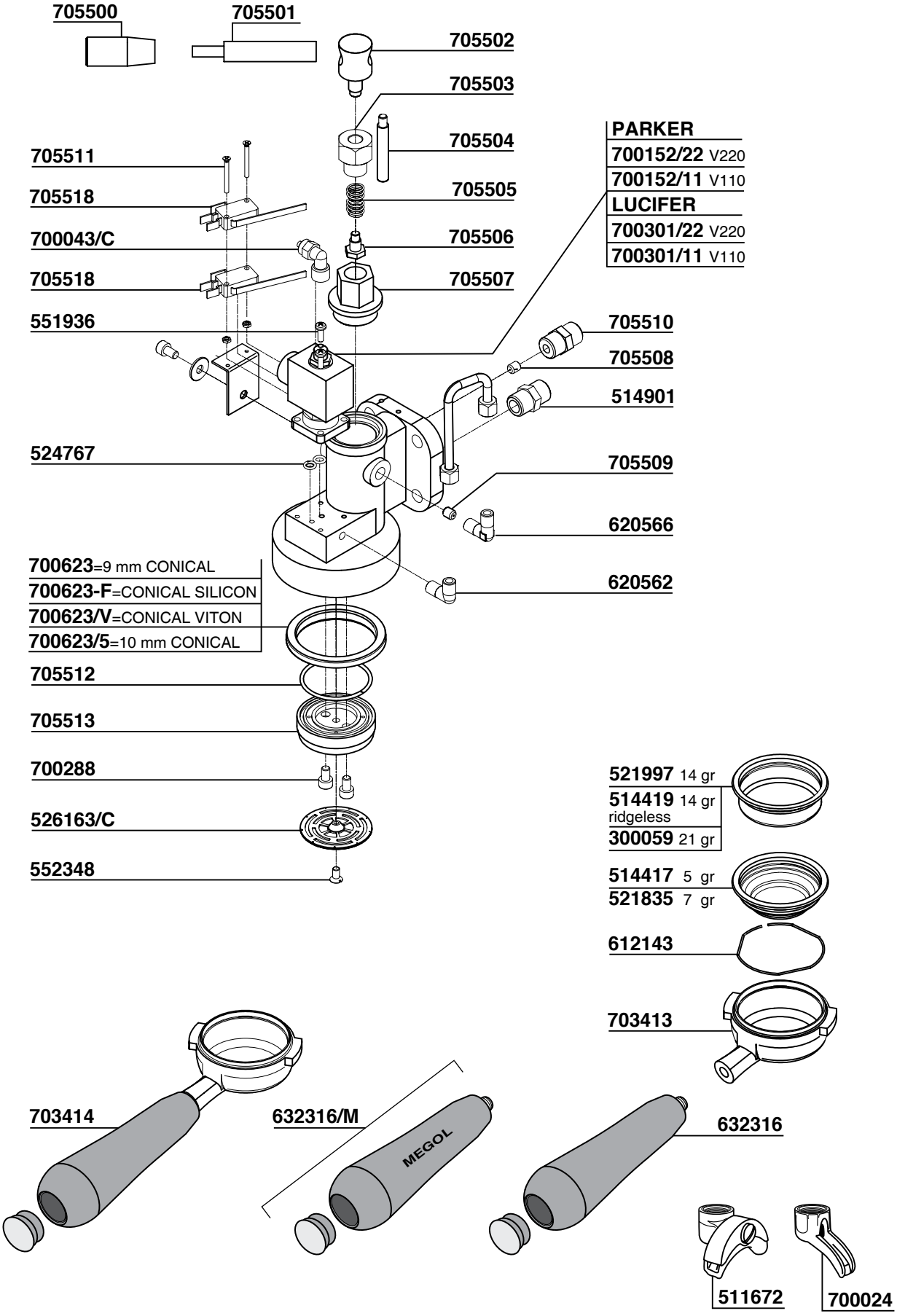
705500
705501
705502
705503
705504
705505
705506
705507
705511
705518
700043/C
705518
551936
PARKER
700152/22 V220
700152/11 V110
LUCIFER
700301/22 V220
700301/11 V110
705510
705508
514901
524767
705509
620566
620562
700623=9 mm CONICAL
700623-F=CONICAL SILICON
700623/V=CONICAL VITON
700623/5=10 mm CONICAL
705512
705513
700288
526163/C
552348
521997 14 gr
514419 14 gr
ridgeless
300059 21 gr
514417 5 gr
521835 7 gr
612143
703413
703414
632316/M
MEGOL
632316
511672
700024

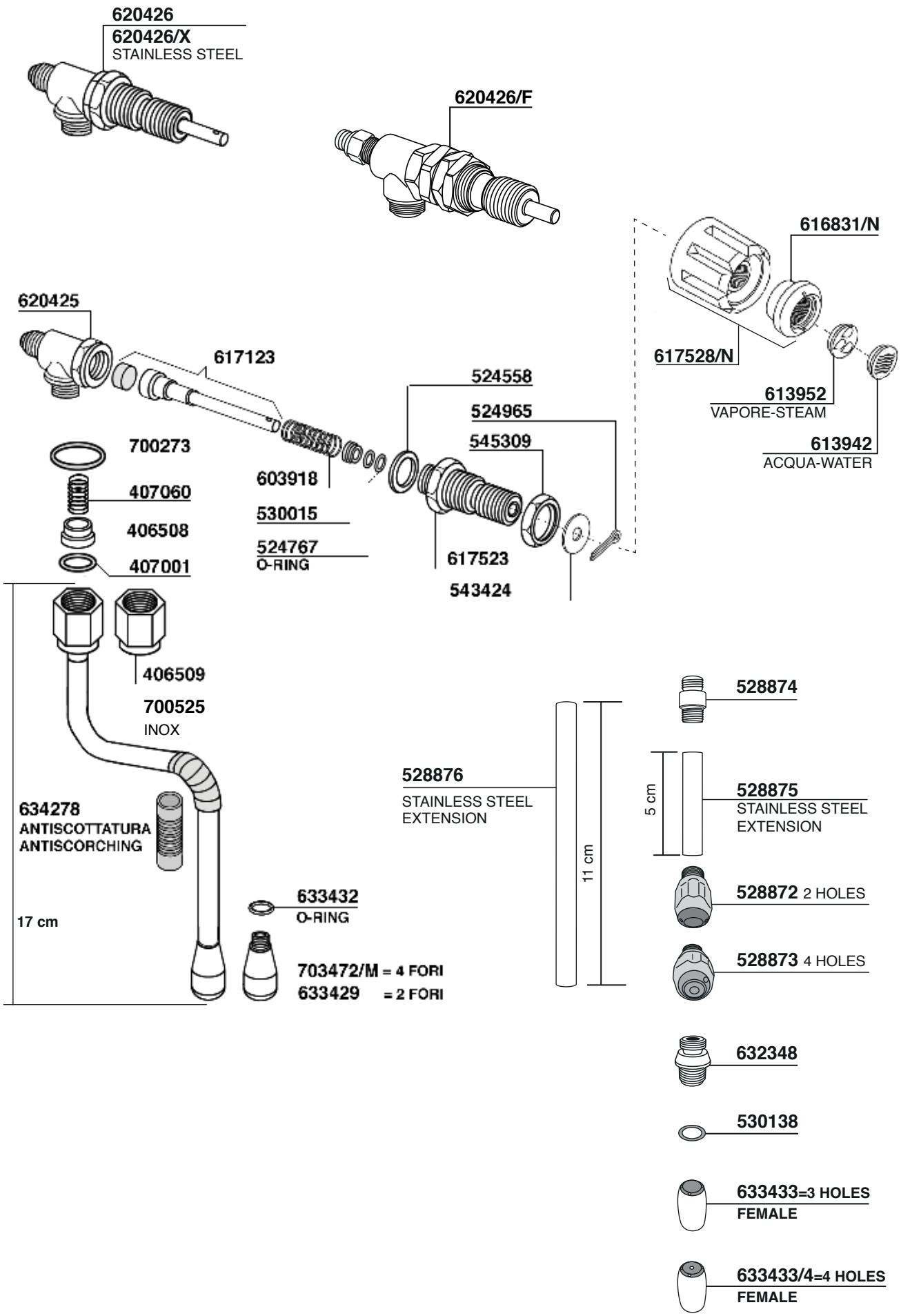
620426
620426/X
STAINLESS STEEL
620426/F
616831/N
620425
617123
617528/N
524558
613952
VAPORE-STEAM
524965
613942
ACQUA-WATER
545309
700273
603918
407060
530015
406508
524767
O-RING
407001
617523
543424
406509
700525
INOX
528874
528876
STAINLESS STEEL
EXTENSION
5 cm
528875
STAINLESS STEEL
EXTENSION
634278
ANTISCOTTATURA
ANTISCORCHING
11 cm
528872 2 HOLES
633432
O-RING
17 cm
528873 4 HOLES
703472/M = 4 FORI
633429 = 2 FORI
632348
530138
633433=3 HOLES
FEMALE
633433/4=4 HOLES
FEMALE

615624/A
CE certificato certified

524555

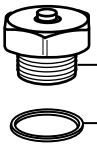

618968

524554

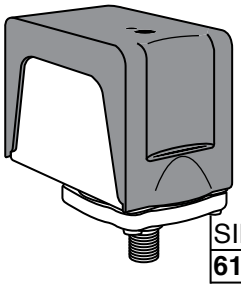

SIRAI
616597 CE/UL

620411=3/8F

524555

617991

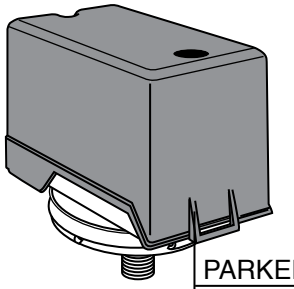

PARKER
616599 CE/UL

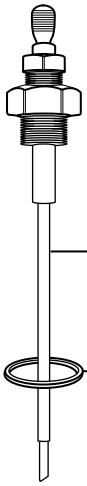

612601/L 140mm

524554

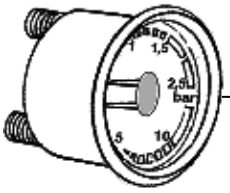

700874

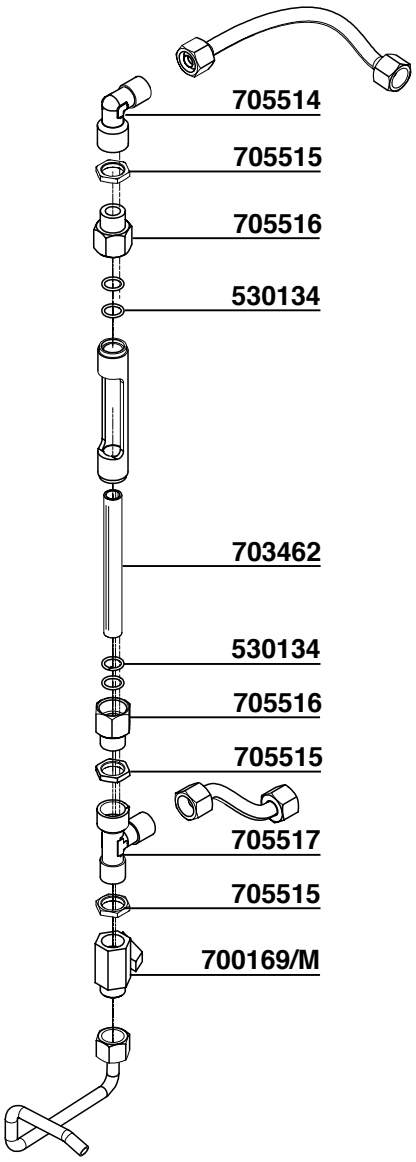

705514

705515

705516

530134

703462

530134

705516

705515

705517

705515

700169/M

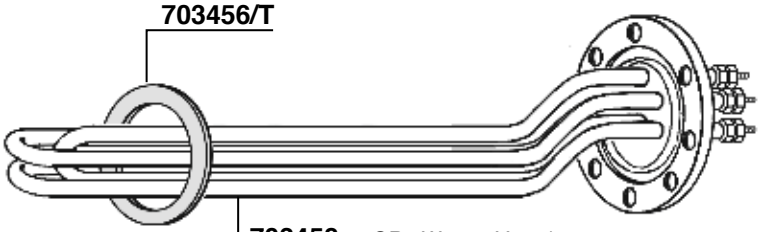

703456/T

703458 = GR2 W3000 V220/380 mm.340

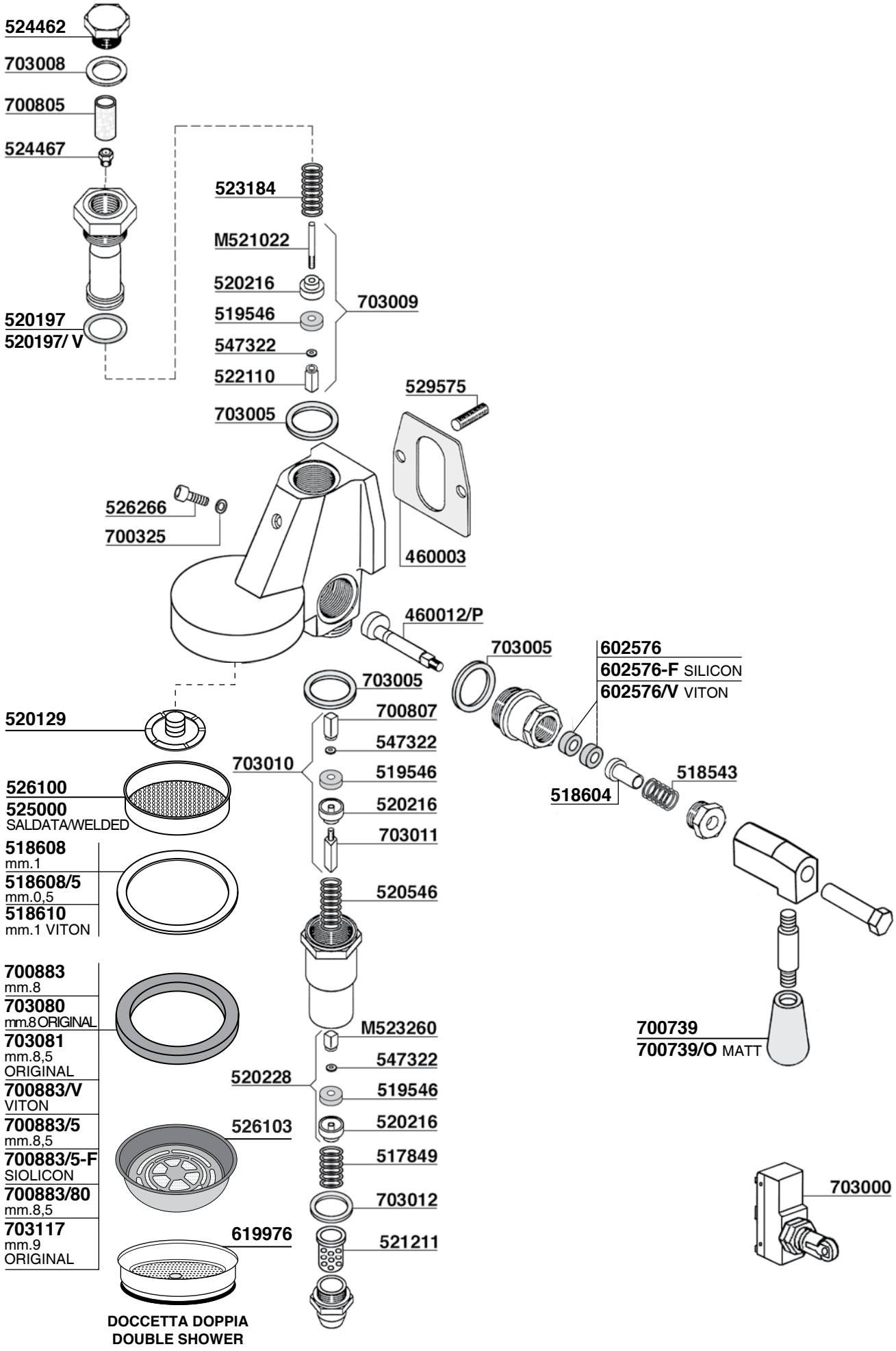
524462
703008
700805
524467
523184
M521022
520216
519546
547322
522110
703009
520197
520197/ V
529575
703005
526266
700325
460003
460012/P
703005
602576
602576-F SILICON
602576/V VITON
703005
700807
547322
519546
520216
703011
703010
520129
526100
525000
SALDATA/WELDED
518608
mm.1
518608/5
mm.0,5
518610
mm.1 VITON
518543
518604
520546
700883
mm.8
703080
mm.8 ORIGINAL
703081
mm.8,5
ORIGINAL
700883/V
VITON
700883/5
mm.8,5
700883/5-F
SIOLICON
700883/80
mm.8,5
703117
mm.9
ORIGINAL
M523260
547322
520228
519546
520216
526103
517849
703012
619976
521211
700739
700739/O MATT
703000
DOCCETTA DOPPIA
DOUBLE SHOWER

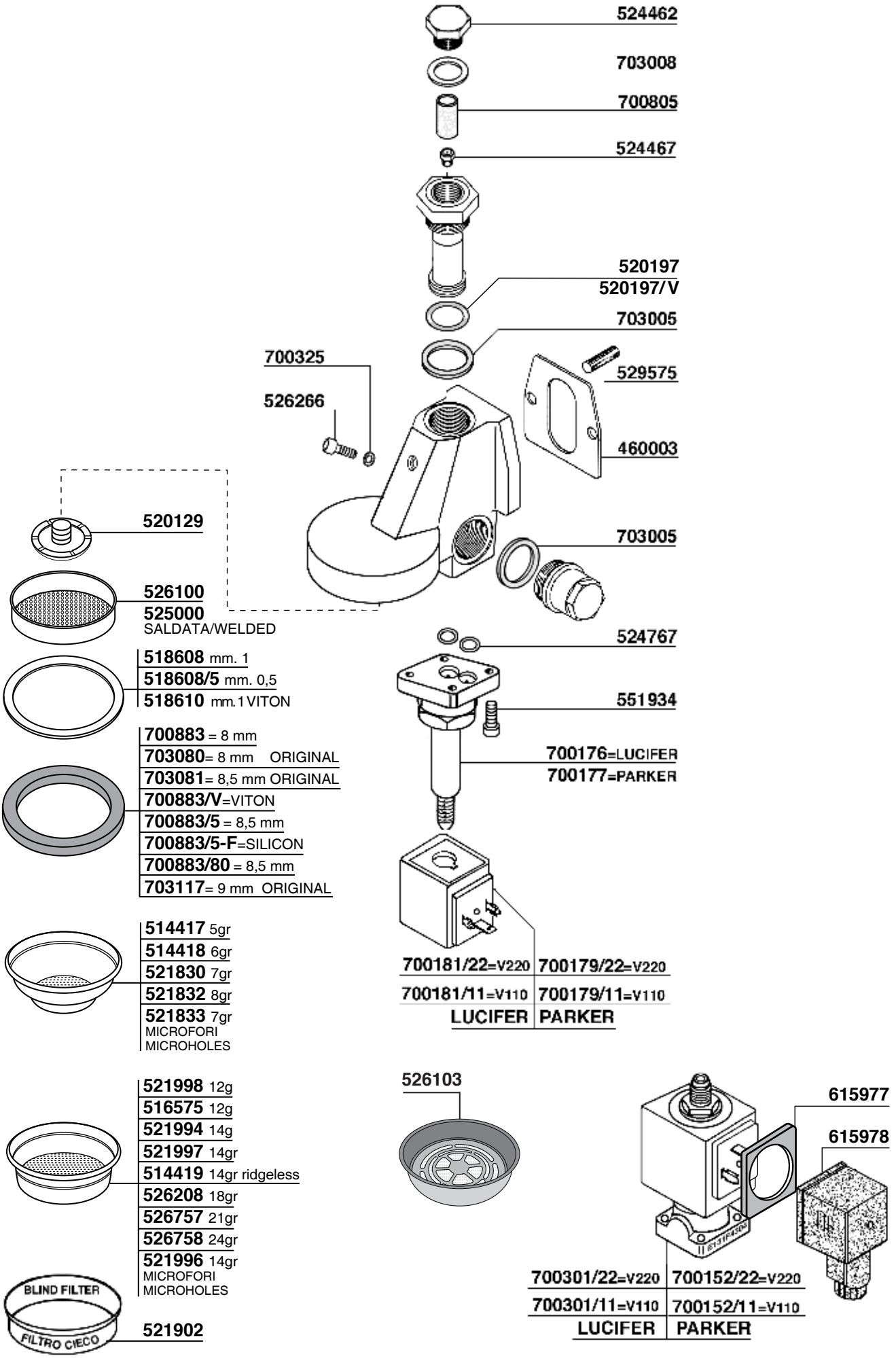
524462
703008
700805
524467
520197
520197/V
703005
700325
526266
529575
460003
520129
703005
526100
525000
SALDATA/WELDED
524767
518608 mm. 1
518608/5 mm. 0,5
518610 mm.1 VITON
551934
700883 = 8 mm
703080= 8 mm ORIGINAL
703081= 8,5 mm ORIGINAL
700883/V=VITON
700883/5 = 8,5 mm
700883/5-F=SILICON
700883/80 = 8,5 mm
703117= 9 mm ORIGINAL
700176=LUCIFER
700177=PARKER
514417 5gr
514418 6gr
521830 7gr
521832 8gr
521833 7gr
MICROFORI
MICROHOLES
700181/22=V220
700179/22=V220
700181/11=V110
700179/11=V110
LUCIFER
PARKER
526103
615977
615978
521998 12g
516575 12g
521994 14g
521997 14gr
514419 14gr ridgeless
526208 18gr
526757 21gr
526758 24gr
521996 14gr
MICROFORI
MICROHOLES
700301/22=V220
700152/22=V220
700301/11=V110
700152/11=V110
LUCIFER
PARKER
BLIND FILTER
FILTRO CIECO
521902

VENERE

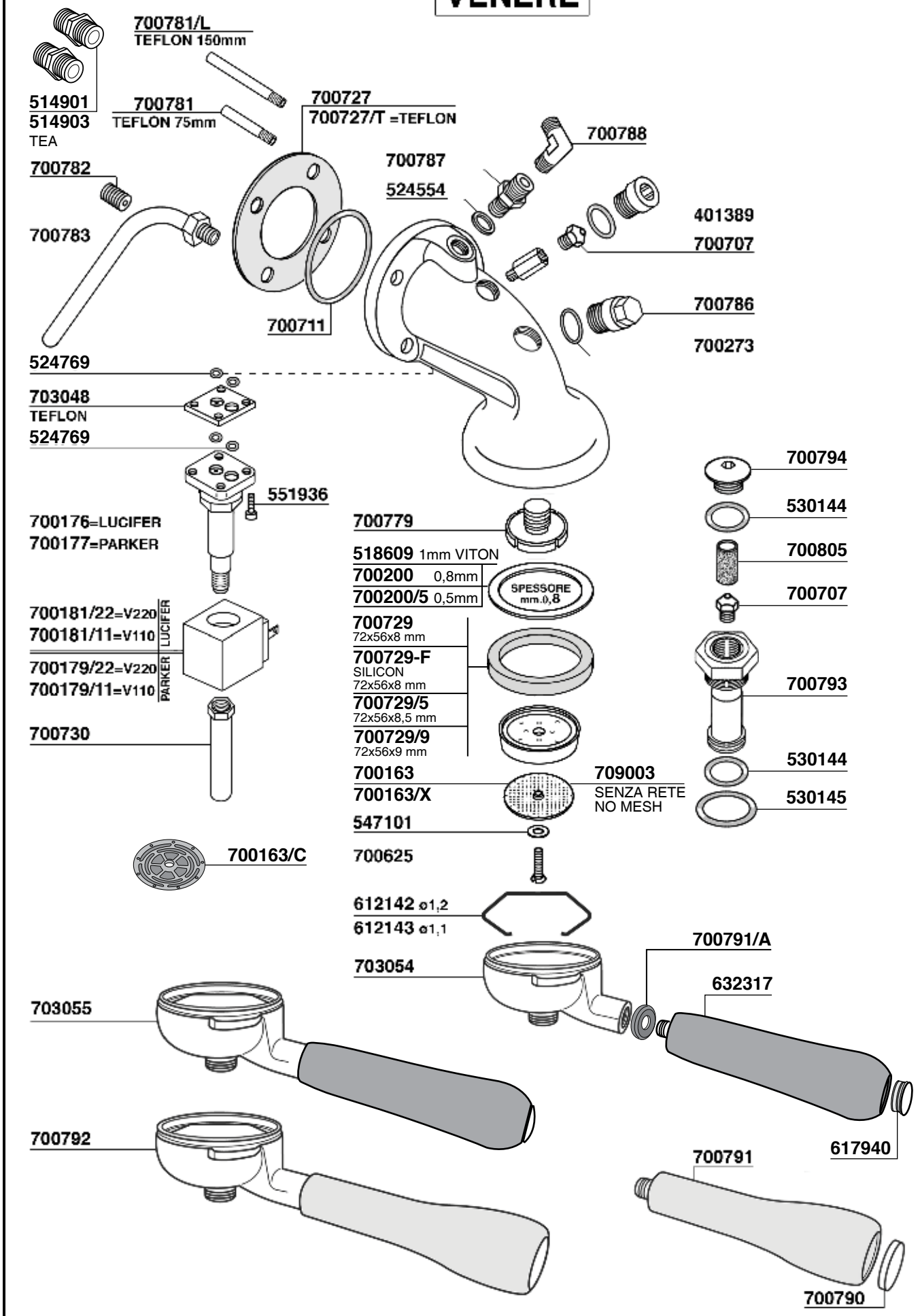
700781/L
TEFLON 150mm
514901
514903
TEA
700781
TEFLON 75mm
700727
700727/T =TEFLON
700788
700787
524554
700782
401389
700707
700783
700786
700711
700273
524769
703048
TEFLON
524769
700794
551936
530144
700176=LUCIFER
700177=PARKER
700779
700805
518609 1mm VITON
700200 0,8mm
700200/5 0,5mm
SPESSORE mm.0,8
700707
700181/22=V220
700181/11=V110
LUCIFER
700729
72x56x8 mm
700729-F
SILICON
72x56x8 mm
700179/22=V220
700179/11=V110
PARKER
700729/5
72x56x8,5 mm
700729/9
72x56x9 mm
700793
700730
530144
700163
700163/X
709003
SENZA RETE
NO MESH
530145
547101
700163/C
700625
612142 ø1,2
612143 ø1,1
700791/A
703054
632317
703055
617940
700792
700791
700790

WEGA

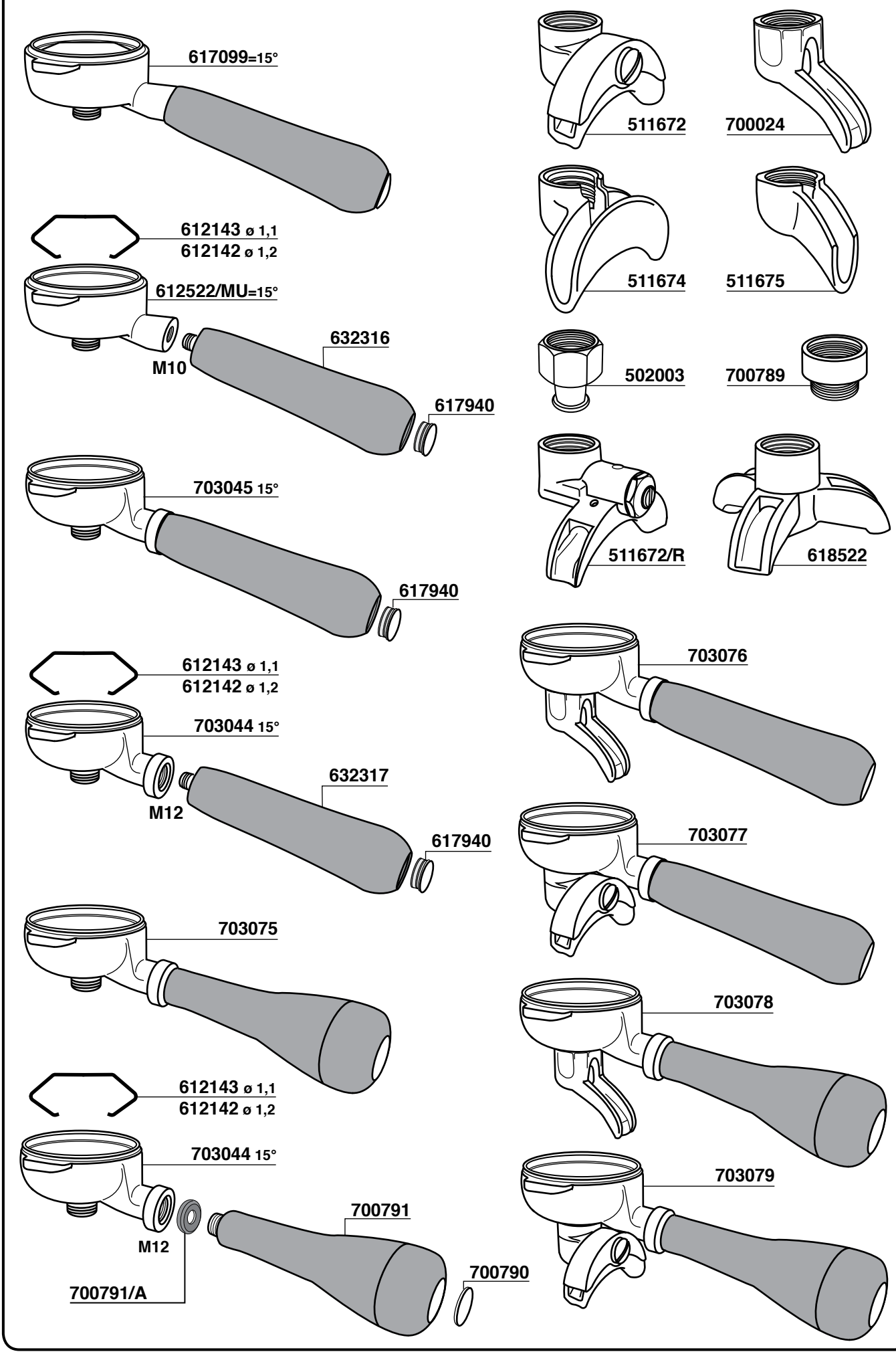
617099=15°
612143 ø 1,1
612142 ø 1,2
612522/MU=15°
632316
M10
617940
703045 15°
617940
612143 ø 1,1
612142 ø 1,2
703044 15°
632317
M12
617940
703075
612143 ø 1,1
612142 ø 1,2
703044 15°
700791
M12
700791/A
700790
511672
700024
511674
511675
502003
700789
511672/R
618522
703076
703077
703078
703079

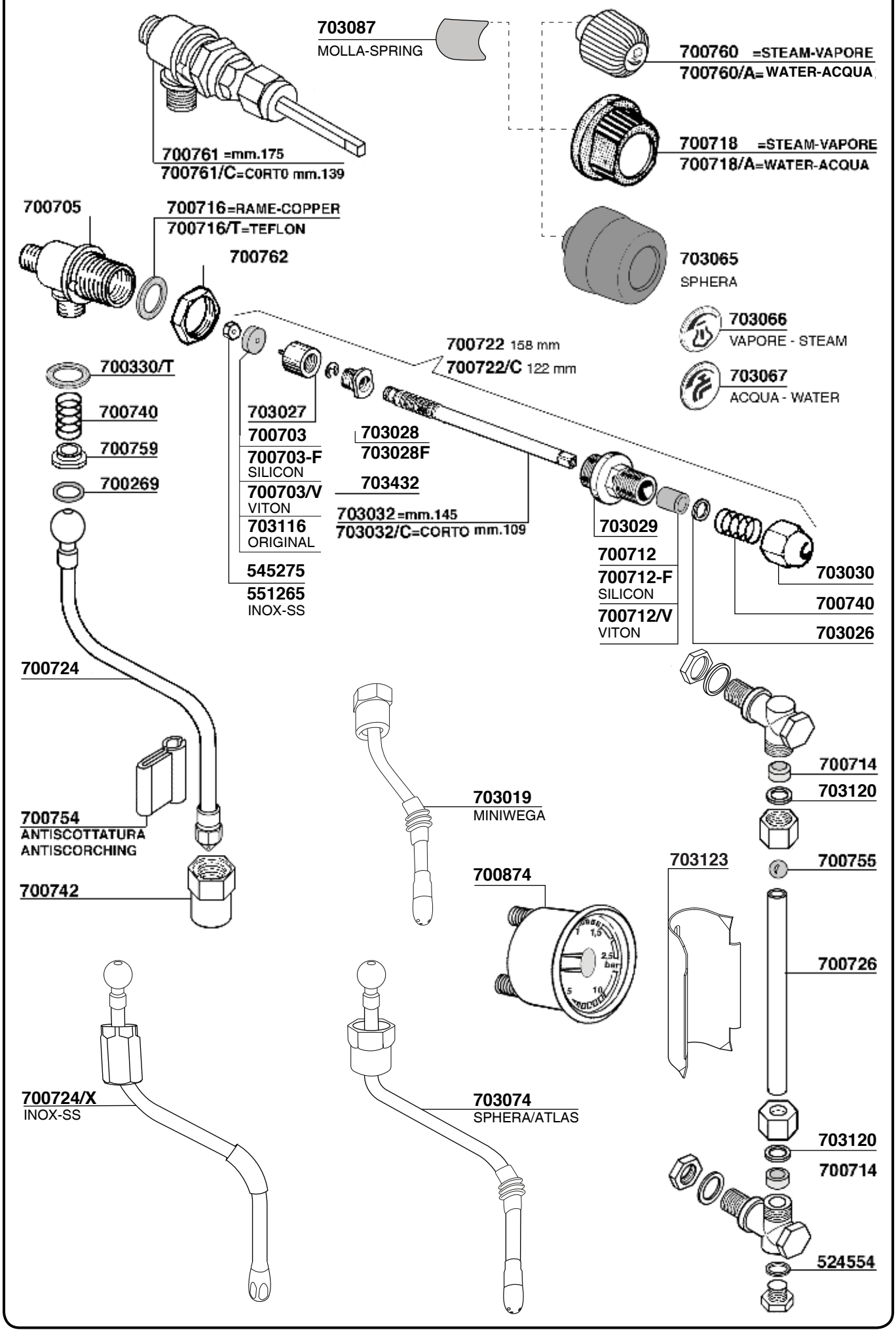
703087
MOLLA-SPRING
700760 =STEAM-VAPORE
700760/A= WATER-ACQUA
700718 =STEAM-VAPORE
700718/A=WATER-ACQUA
700761 =mm.175
700761/C=CORTO mm.139
700705
700716=RAME-COPPER
700716/T=TEFLON
700762
703065
SPHERA
703066
VAPORE - STEAM
703067
ACQUA - WATER
700722 158 mm
700722/C 122 mm
700330/T
700740
700759
700269
703027
700703
700703-F
SILICON
700703/V
VITON
703116
ORIGINAL
545275
551265
INOX-SS
703028
703028F
703432
703032=mm.145
703032/C=CORTO mm.109
703029
700712
700712-F
SILICON
700712/V
VITON
703030
700740
703026
700724
700754
ANTISCOTTATURA
ANTISCORCHING
700742
703019
MINIWEGA
700874
703123
700714
703120
700755
700726
703120
700714
524554
700724/X
INOX-SS
703074
SPHERA/ATLAS

618968

524554

700750

524554

618970

615624/A
certificato
certified

524555

700217

524555

618969
ø 8

524554

620579/2

524554

703058

524552/R

524555

703068

514901

524555

524554

542794 M10X40

501652

501652/T TEFLON

529575

700715

700715/T=TEFLON

703058

524554

703014

6 POLI

703001 GR1 2000W 220/380V mm. 170
703001/11 GR1 2000W 110V mm. 170
703002 GR2 3000W 220/380V mm. 290
703003 GR3 3700W 220/380V mm.570
703069 GR2 4500W 220/380V mm. 310
703004 GR3/4 5000W 220/380V mm. 570

4 POLI

700731/22 GR1 2000W 220V mm. 160
700731/11 GR1 1700W 110V mm. 175
700732/22 GR2 2600W 220V mm. 305
700778 GR3 3700W 220V mm. 515
633092 GR3-4 6500W 220V mm. 500

400826/T

mm 95

MINIWEGA

703020 1500W 220V mm.95

703020/11 1300W 110V mm.95

mm 105

501652/T

703022 = w1500 220V mm. 105

703022/11 = w1500 110V mm. 105

612601 120mm

612601/L 140mm

524554

592002

Ø40L=282mmGR/2

616597 CE/UL

703013

592003

Ø40L=502mm GR/3

MOTORE RAFFREDDATO AD ACQUA - MOTOR WATERCOOL

621112 (µF 6,3)
700182
700182
700182
514901
514903 TEA
524555
514901
514903 TEA
524555
115 mm
140 mm
135 mm
700048
703024
700050
703023 MOTOR V220
703023/11 MOTOR V110
700008 PROCON
700008/X INOX
STAINLESS STEEL

700253/22 220V
700253/11 110V
615978/P

700869/22 220V
700869/11 110V
615977
615978

615978/T
615979
617903
530143
551937
700621
DIGMESA

21 mm
68 mm
3/8
700011

21 mm
65 mm
3/8
700011/E

620405/C
703082

700749
20A 0-1

613656

700429

703072 WHITE
PULSANTE
PUSH BUTTON

703059
CROMATO
CHROME PLATED

703056
703056/V=VITON

700769
32A 0-1

703025
25A 0-1-2

703031

524554
700744

700723

550168

700713

700739
700739/O MATT

523239
700741

700703
700703-F
SILICON
700703/V
VITON
703116

700747

700031/16

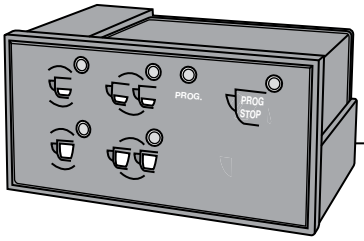

703015

PULSANTIERA + CENTRALINA
TOUCHPAD + ELECTRONIC BOX

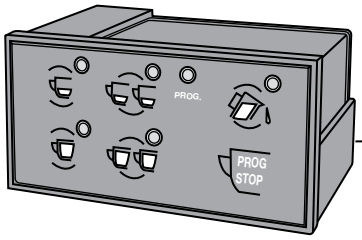

703016

PULSANTIERA
TOUCHPAD

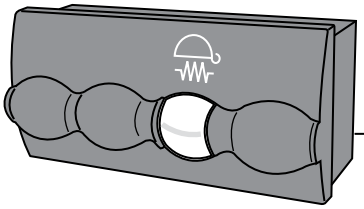

703060
SPHERA

PULSANTIERA SCALDATAZZE
CUP WARMER TOUCHPAD

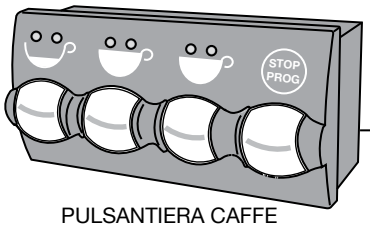

703061
SPHERA EVD

PULSANTIERA CAFFE
COFFEE TOUCHPAD

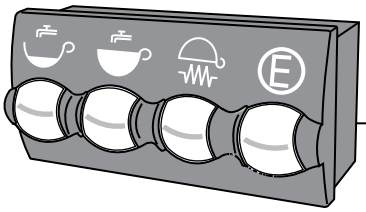

703062
SPHERA

PULSANTIERA SERVIZI
SERVICE TOUCHPAD

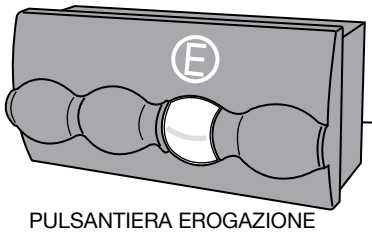

703064
SPHERA

PULSANTIERA EROGAZIONE
1 BREW TOUCHPAD

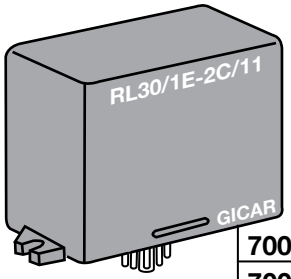

700574 220V
700574/11 110V

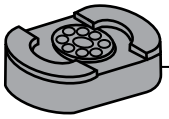

401920

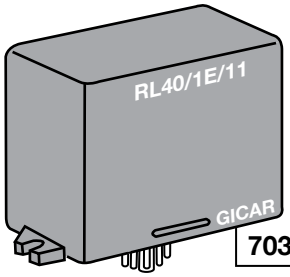

703017 220V

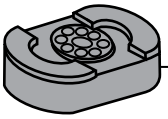

401920

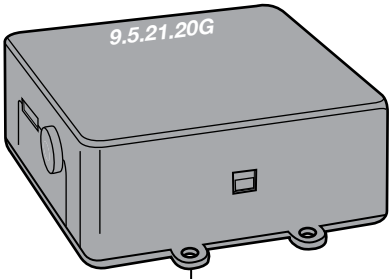

703073

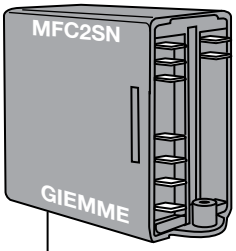

703018 V220
MINIWEGA

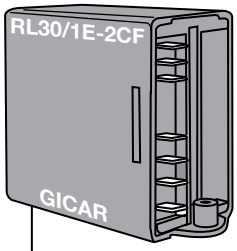

700737 V220
700737/11 V110
703063 WITH TIME OUT

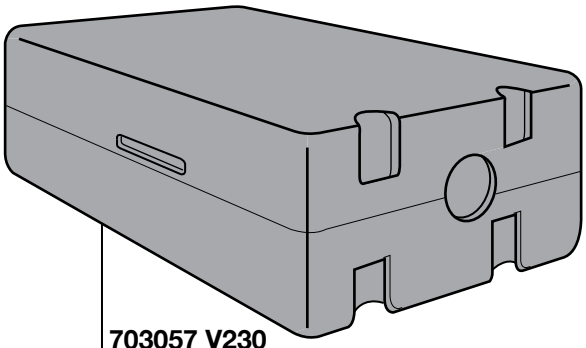

703057 V230
703057/11 V110
CENTRALINA SPHERA EVD GR1-2-3
ELECTRONIC BOX SPHERA EVD GR1-2-3

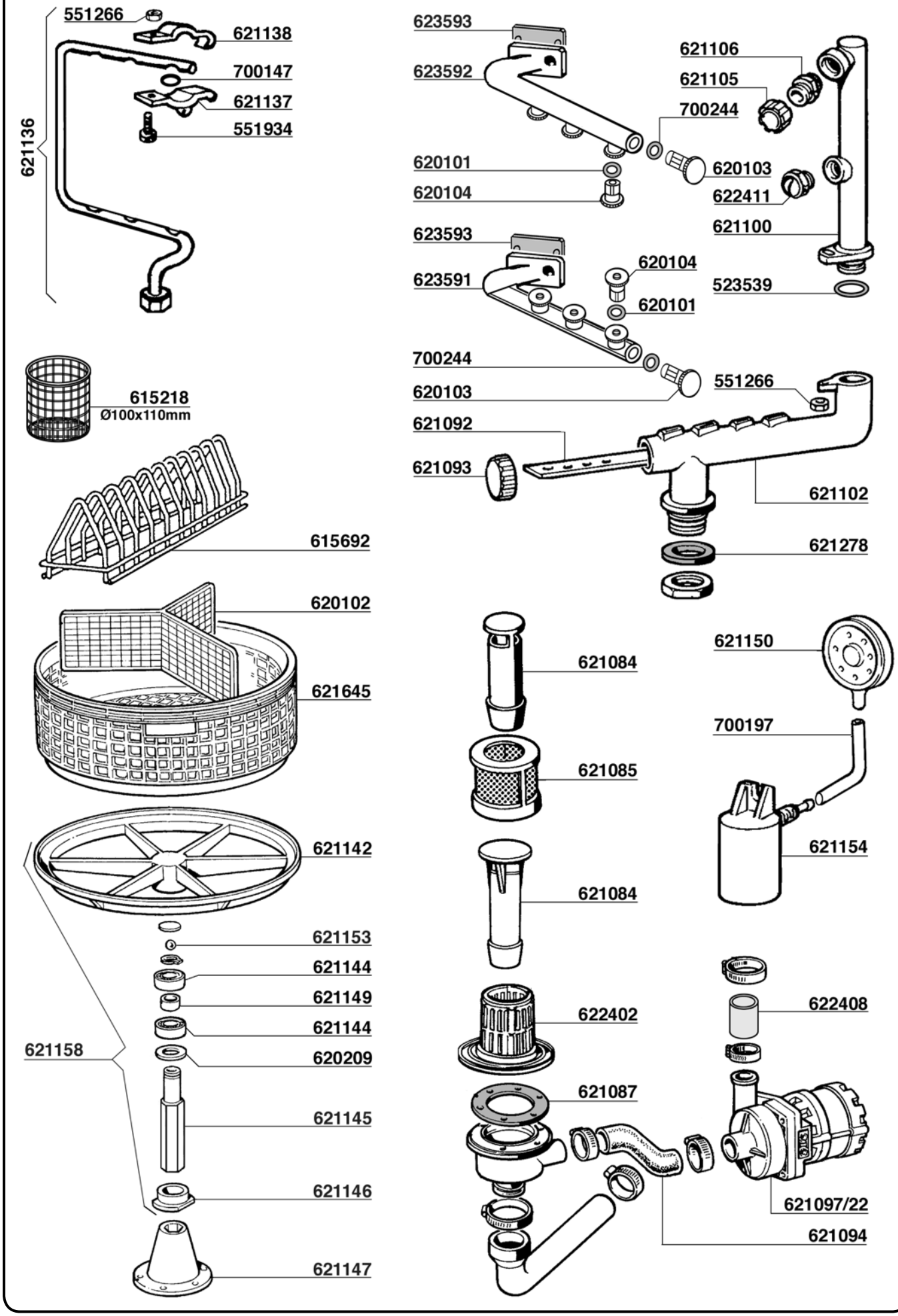
551266
621138
700147
621137
551934
621136
623593
623592
621106
621105
700244
620101
620104
620103
622411
621100
623593
623591
620104
620101
523539
700244
620103
551266
615218
Ø100x110mm
621092
621093
621102
615692
621278
620102
621645
621084
621150
700197
621085
621142
621154
621084
621153
621144
621149
621144
621158
620209
622402
622408
621087
621145
621146
621097/22
621094
621147

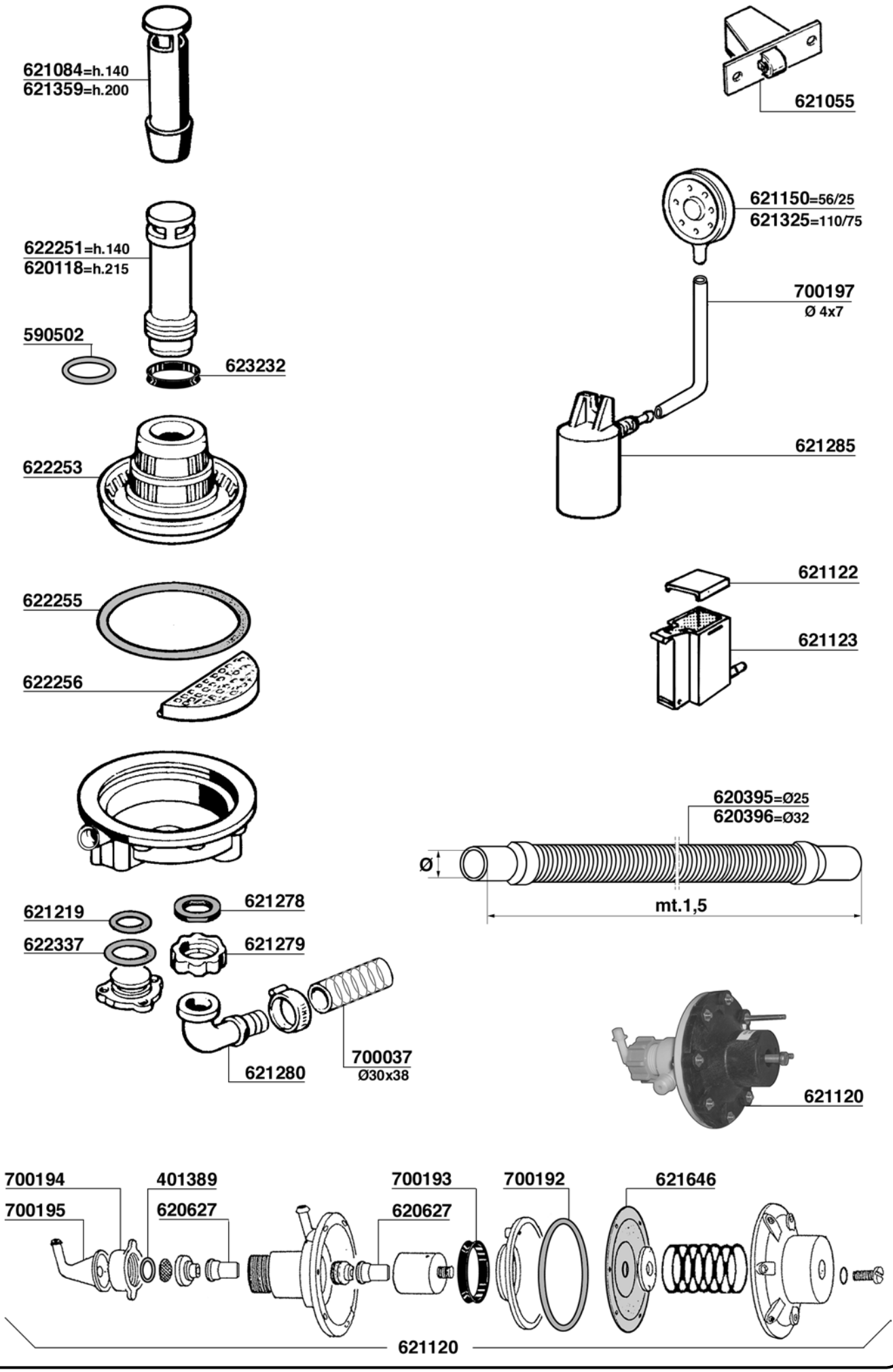
621084=h.140
621359=h.200
621055
621150=56/25
621325=110/75
622251=h.140
620118=h.215
700197
Ø 4x7
590502
623232
622253
621285
621122
622255
621123
622256
620395=Ø25
620396=Ø32
Ø
mt.1,5
621219
621278
622337
621279
700037
Ø30x38
621280
621120
700194
401389
700193
700192
621646
700195
620627
620627
621120

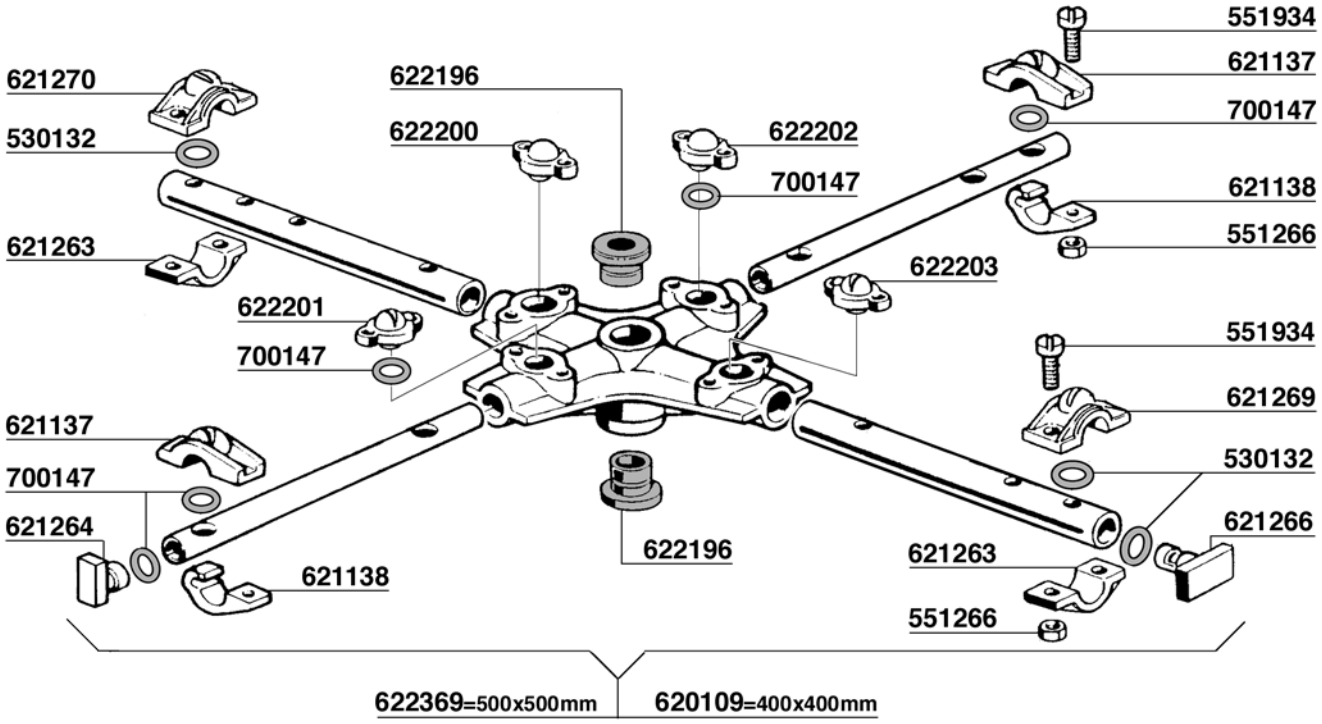
551934
621137
700147
621270
530132
622196
622200
622202
700147
621138
551266
621263
622203
622201
700147
551934
621269
621137
700147
530132
621264
621266
622196
621263
621138
551266
622369=500x500mm
620109=400x400mm

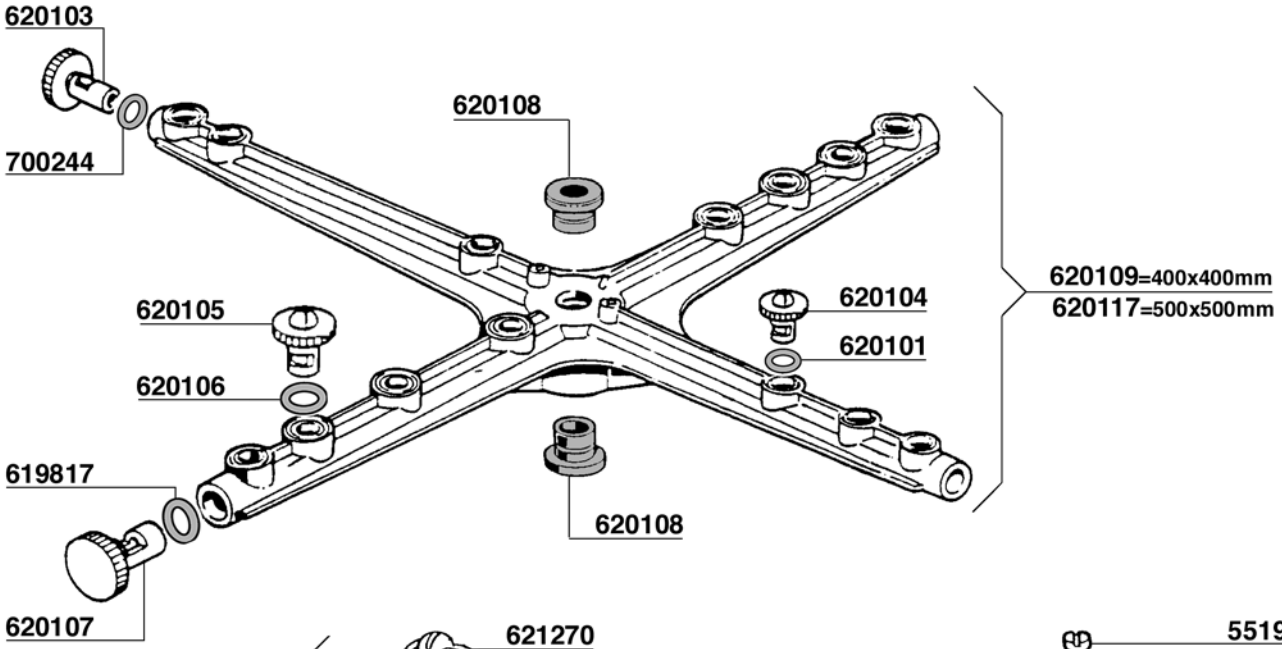
620103
620108
700244
620109=400x400mm
620117=500x500mm
620105
620104
620101
620106
619817
620108
620107

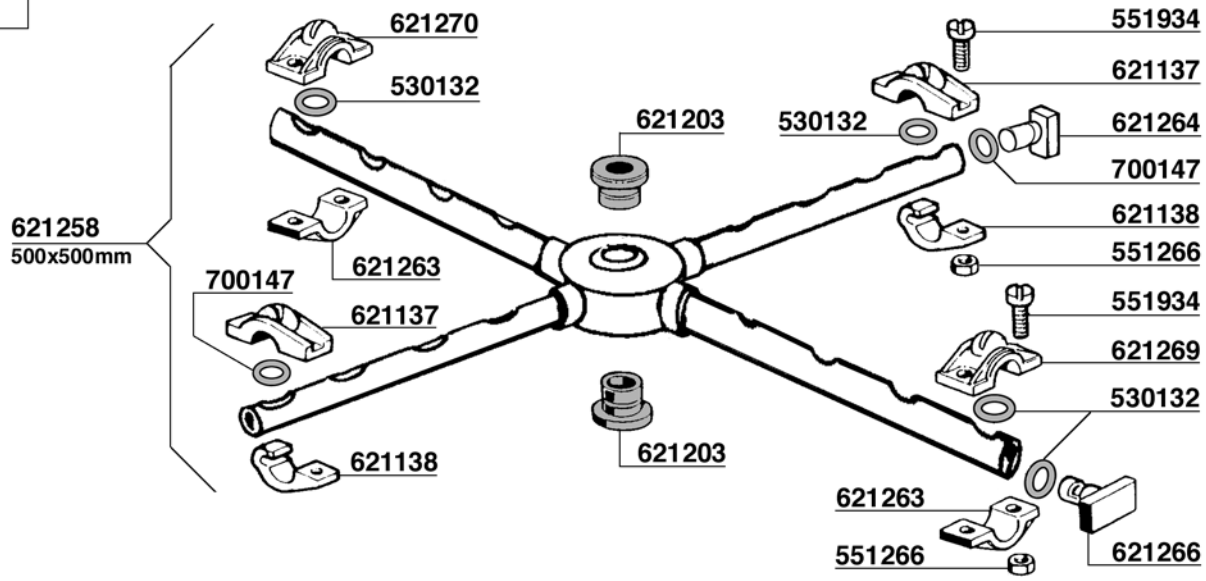
621270
551934
530132
621137
621203
530132
621264
700147
621258
500x500mm
621138
621263
551266
700147
621137
551934
621269
530132
621203
621138
621263
551266
621266

621302/22
BOILER W3000 V220

621303

623932

621348= BOILER W4500 V220/380
620813= BOILER W6000 V220/380

621303

621155

621156/22
VASCA W1500 V220

621118/22
BOILER LAVATAZZE W2800 V220

621117

611532

621286/22
VASCA W2400 V220

621338
VASCA W3000 V220/380

621114

621055

621271

622231

621333

621078

621071

616950

621071

621080

620110

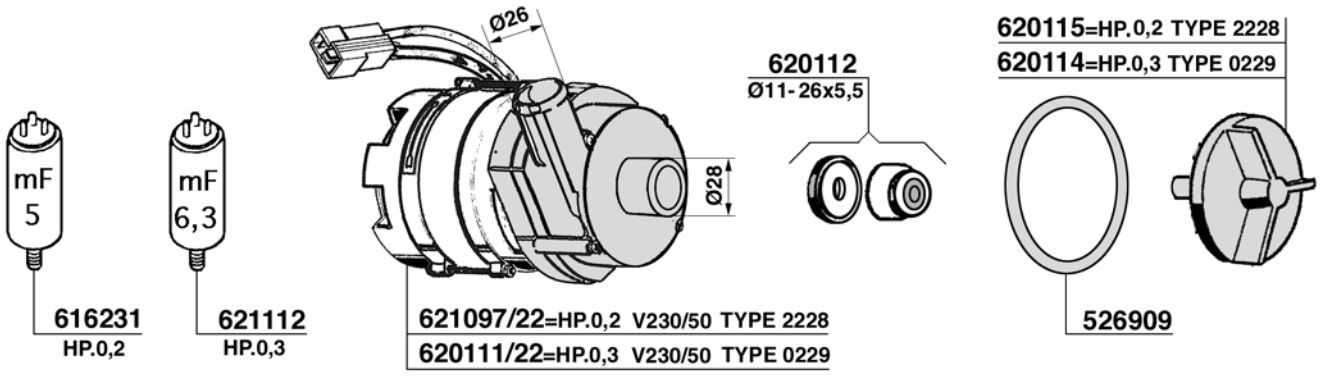
mF 5
mF 6,3
Ø26
Ø28
620112
Ø11- 26x5,5
620115=HP.0,2 TYPE 2228
620114=HP.0,3 TYPE 0229
616231
HP.0,2
621112
HP.0,3
621097/22=HP.0,2 V230/50 TYPE 2228
620111/22=HP.0,3 V230/50 TYPE 0229
526909

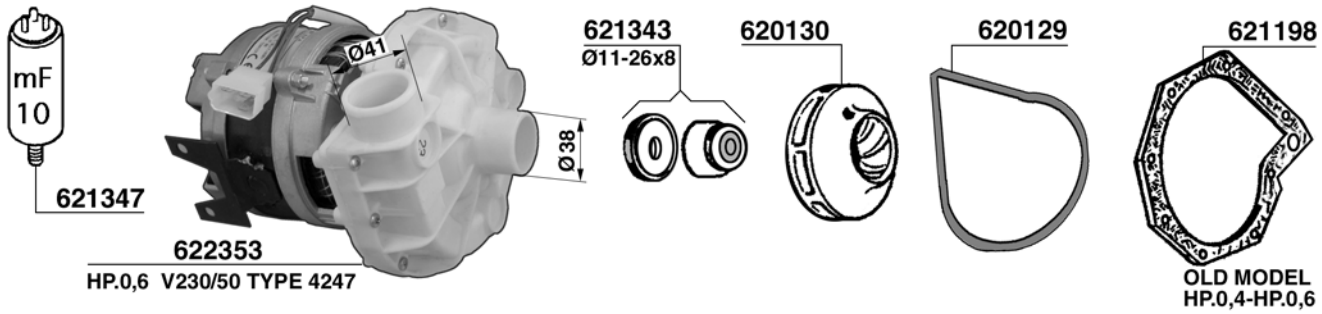
mF 10
621347
Ø41
Ø38
622353
HP.0,6 V230/50 TYPE 4247
621343
Ø11-26x8
620130
620129
621198
OLD MODEL
HP.0,4-HP.0,6

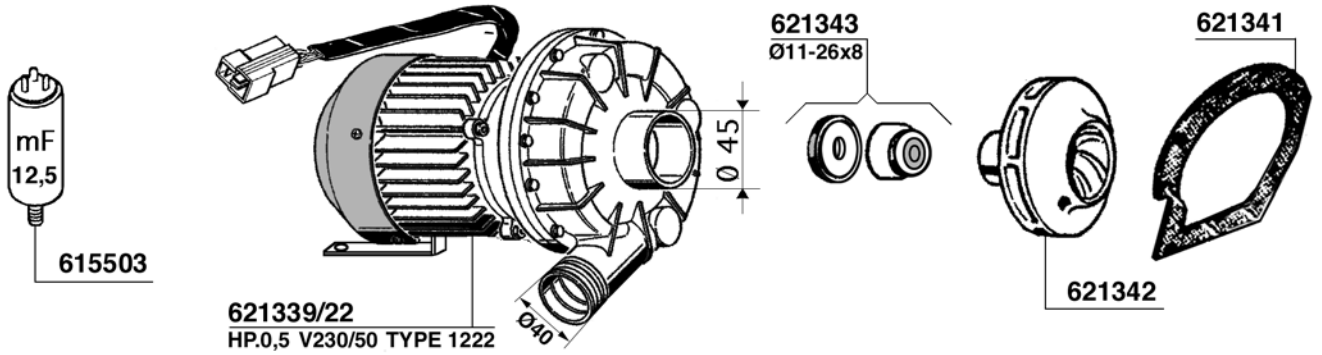
mF 12,5
615503
Ø 45
Ø40
621339/22
HP.0,5 V230/50 TYPE 1222
621343
Ø11-26x8
621341
621342

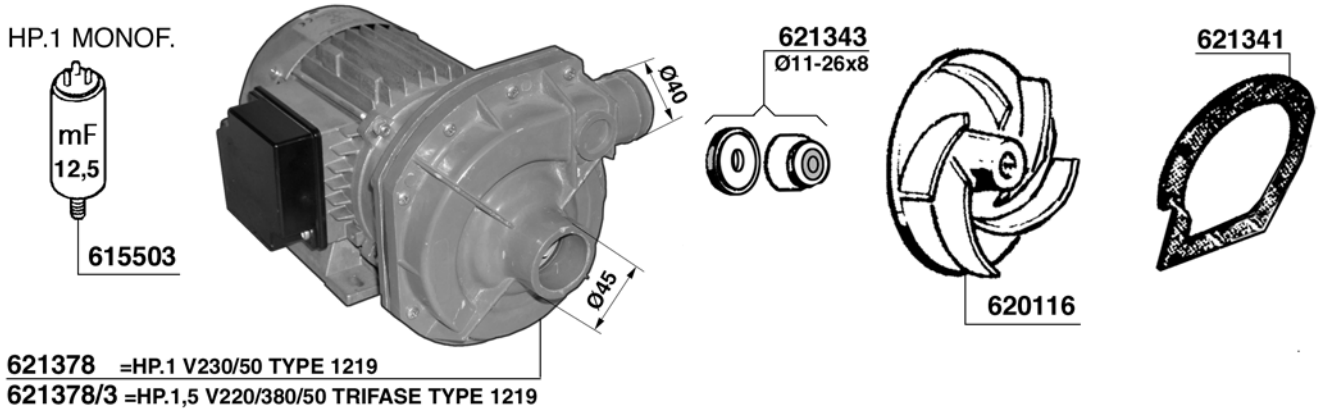
HP.1 MONOF.
mF 12,5
615503
Ø40
Ø45
621343
Ø11-26x8
621341
620116
621378 =HP.1 V230/50 TYPE 1219
621378/3 =HP.1,5 V220/380/50 TRIFASE TYPE 1219

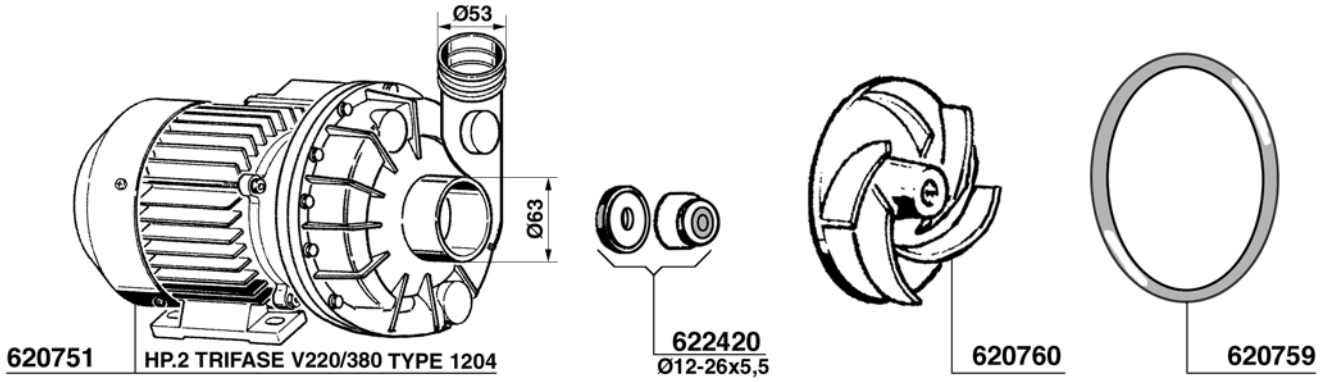
Ø53
Ø63
620751
HP.2 TRIFASE V220/380 TYPE 1204
622420
Ø12-26x5,5
620760
620759

COMENDA-FAEMA

621129

621317

615163

615149

621758

700129

700609=1,5LT/M
700612=0,7LT/M

621074

2 CAMME 120"

621071

615800

3 CAMME 120"

621353

3 CAMME 210"

621071

623254

3 CAMME 120"

621324

3 CAMME 180"

621082

4 CAMME 20'

620119

4 CAMME 120"

PERISTALTIC PUMP WITH
DOSED QUANT.ADJUSTED

POMPA PERISTALTICA
A DOSE REGOLABILE

620126

620121

SEKO PBR 03
FOR DETERGENT
PER DETERGENTE

620127

620123

SEKO PBR 0,4
FOR SHINER
PER BRILLANTANTE

560050

PVC Ø4x6

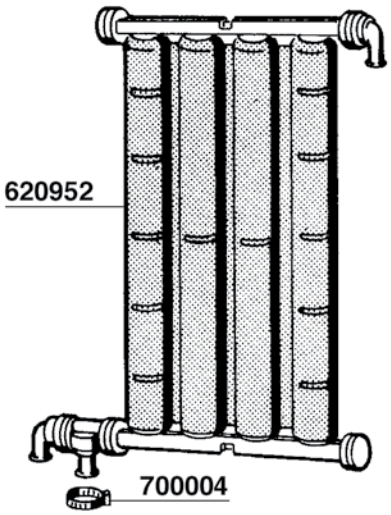

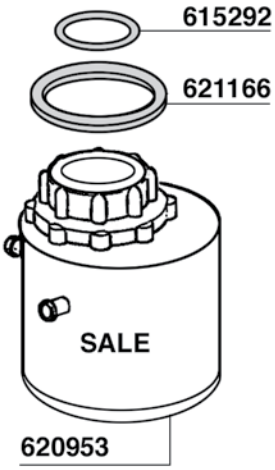

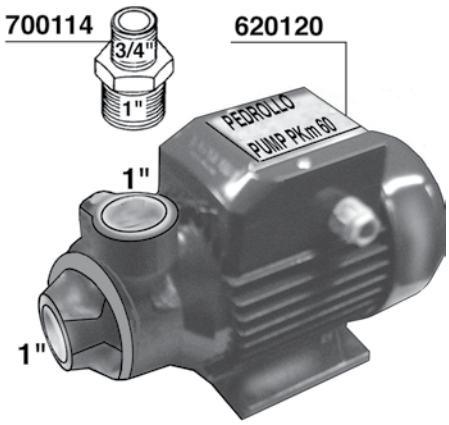

POMPA AUSILIARIA RISCIACQUO
RINSE BOSTER PUMP
l/min. 5 ÷ 40 H 5 ÷ 38 mt
HP 0,5 V220/230

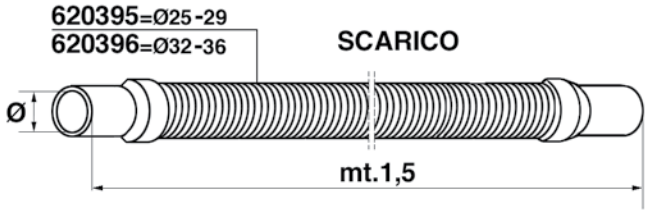

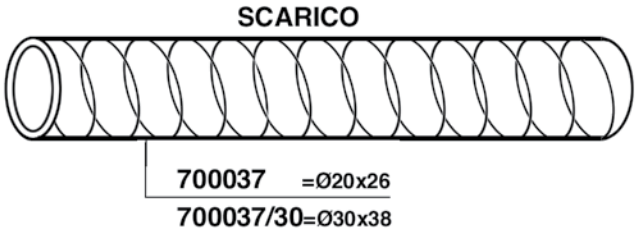

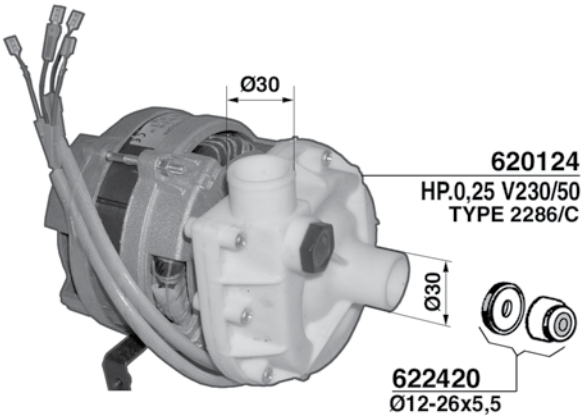

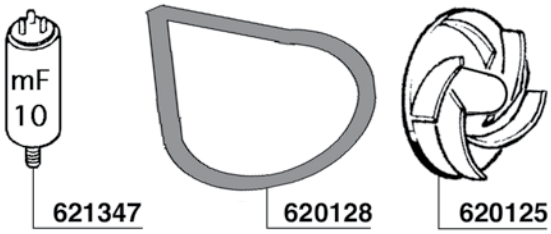

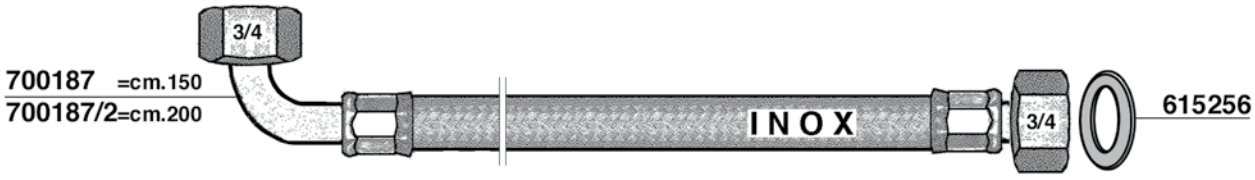

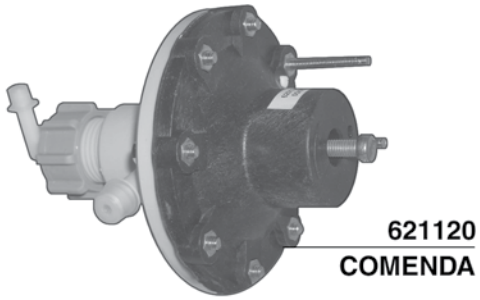

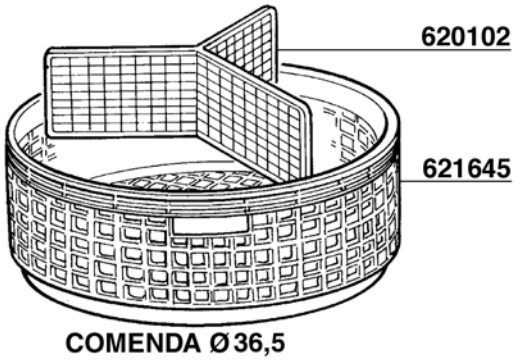
620102
621645
COMENDA Ø 36,5

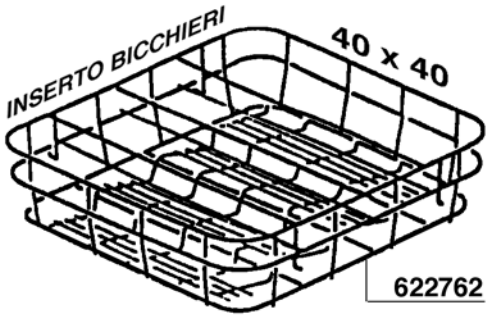
INSERTO BICCHIERI
40 x 40
622762

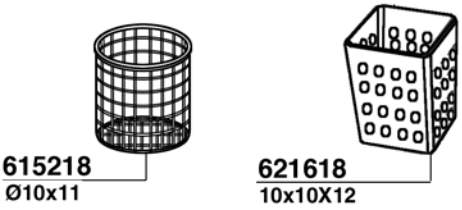
615218
Ø10x11
621618
10x10X12

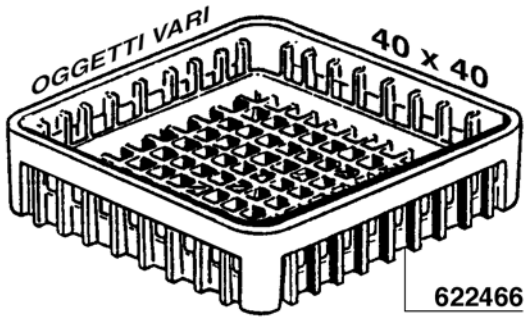
OGGETTI VARI
40 x 40
622466

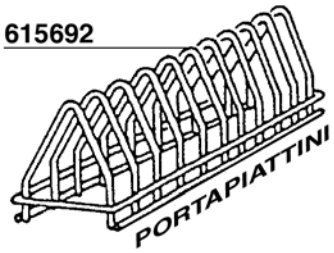
615692
PORTAPIATTINI

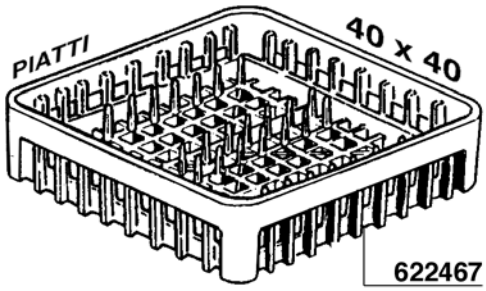
PIATTI
40 x 40
622467

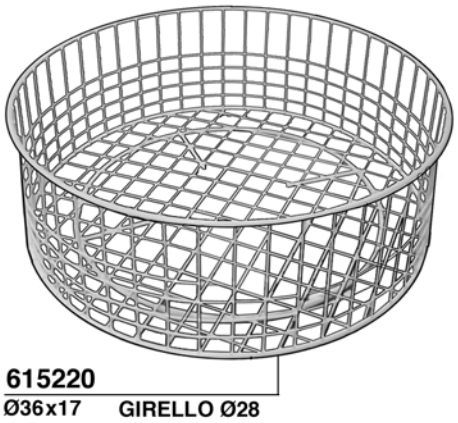
615220
Ø36x17 GIRELLO Ø28

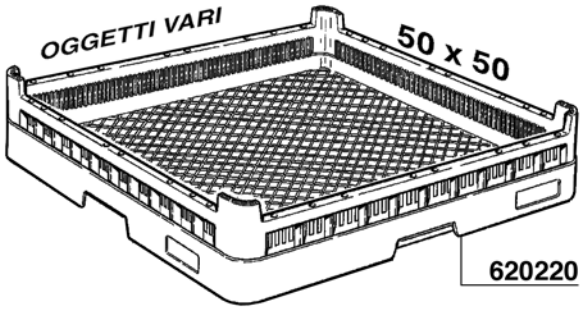
OGGETTI VARI
50 x 50
620220

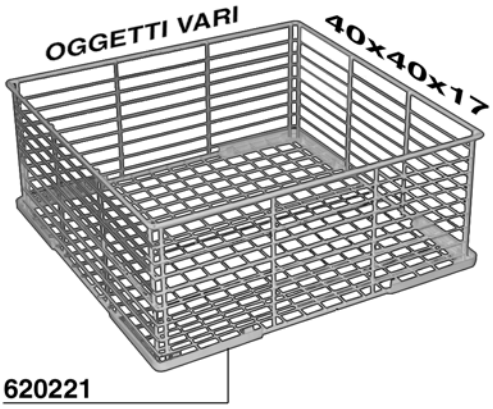
OGGETTI VARI
40x40x17
620221

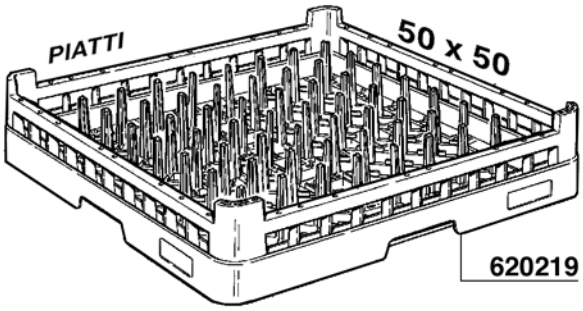
PIATTI
50 x 50
620219

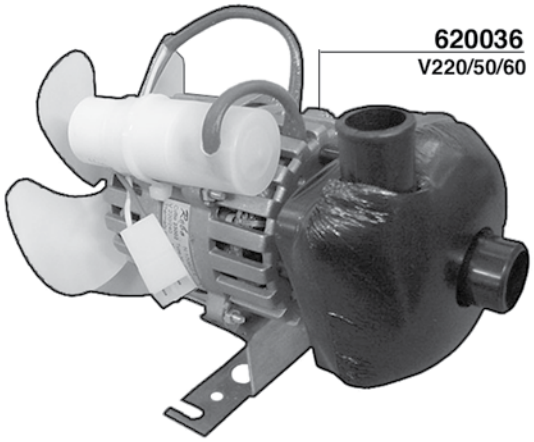

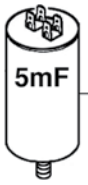

TERM.EVAPORATORE

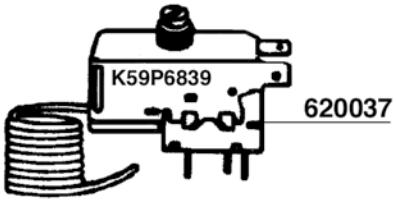

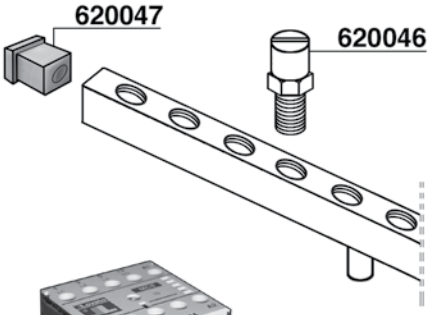

TERM. CONTENITORE

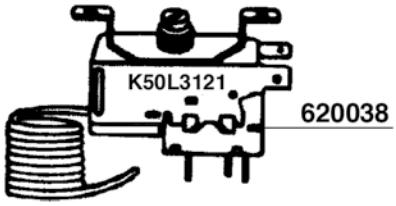

702307=V220
702309=V110
TELERUTTORE
PICCOLO BG09

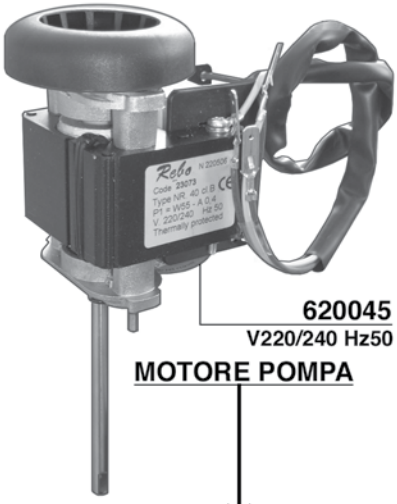

MOTORE POMPA

PRESSOSTATO

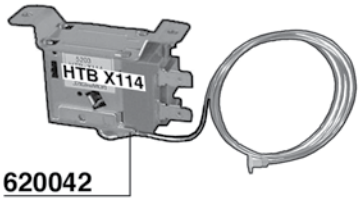

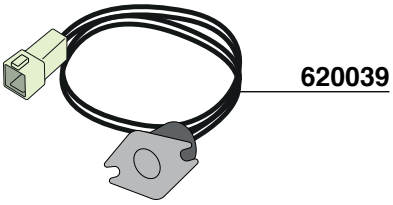

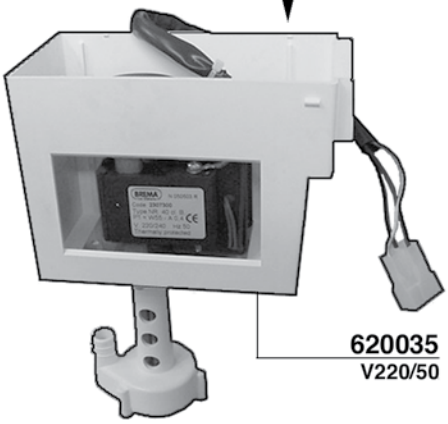

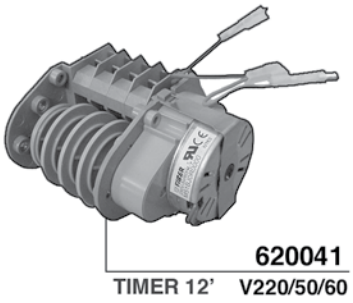

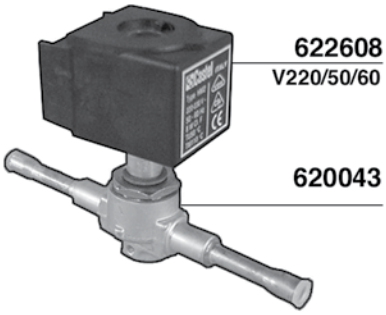

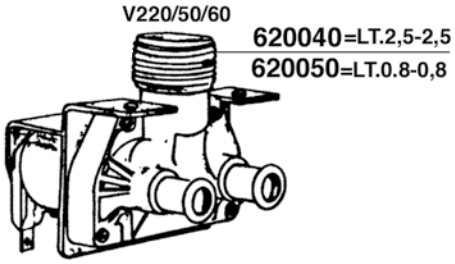

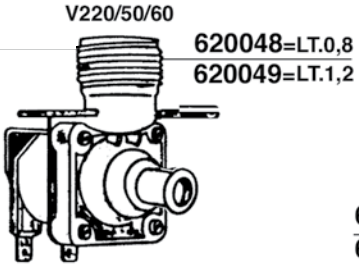

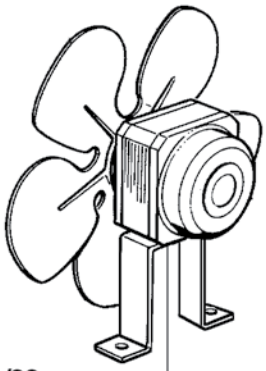

621906
621907
621694/22
621838/22
621758
620023/22=W10 V220
620024/22=W5 V220

621888=F15
620242=F30
621900=F45
621891
621896
621889
EVAPORATORE
MAGAZZINO

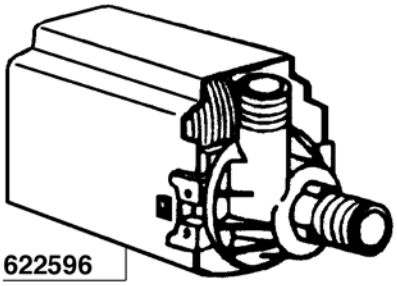

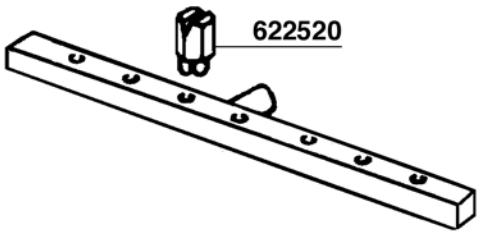

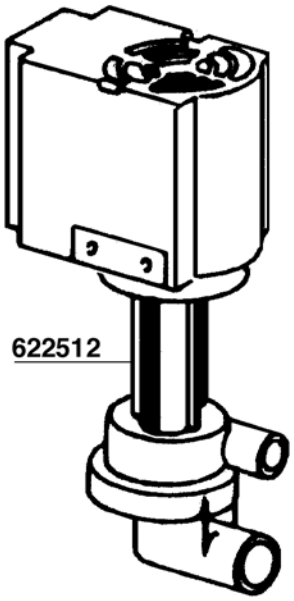

TERM.EVAPORATORE

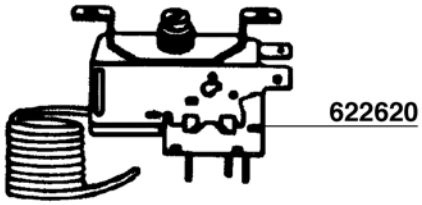

622619/F

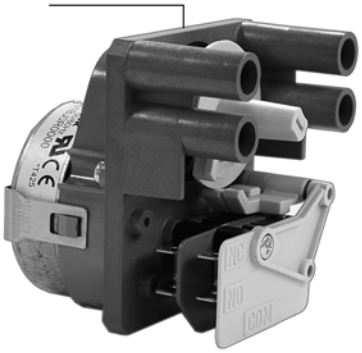

TIMER 1 CAMME 2 MICRO 15'

TERM.MAGAZZINO 1aSERIE

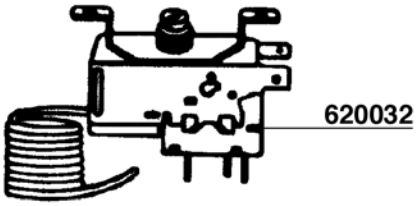

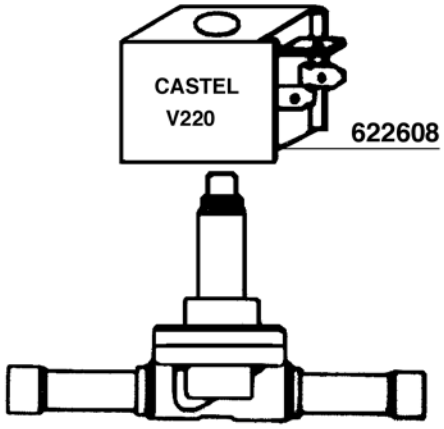

TERM.MAGAZZINO 2aSERIE

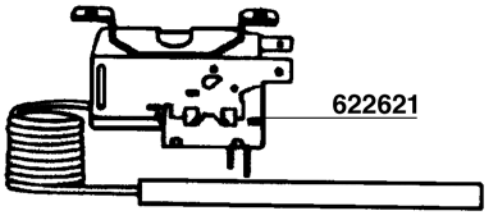

PRESSOSTATO

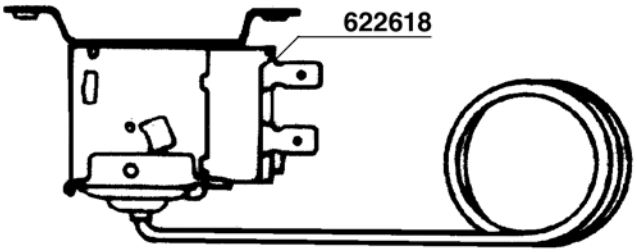

TERM.CONDENSATORE

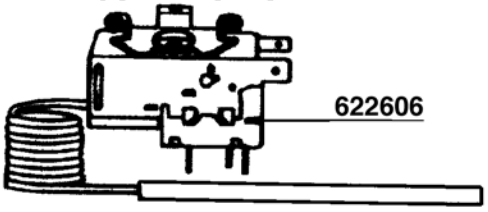

700609=1,5LT/M
700612=0,7LT/M

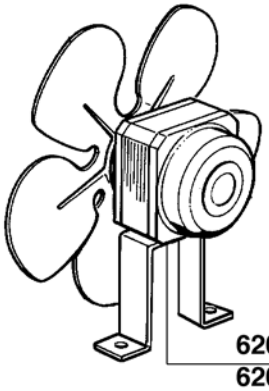

620023/22=W10 V220
620024/22=W5 V220

621758

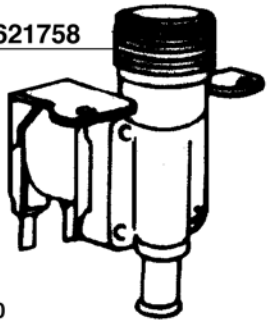

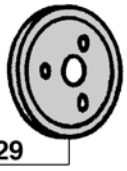

700129

615149

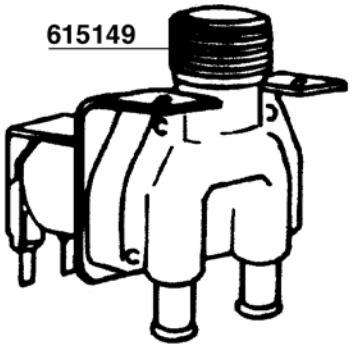

DEPURATORI SERIE LT - IV

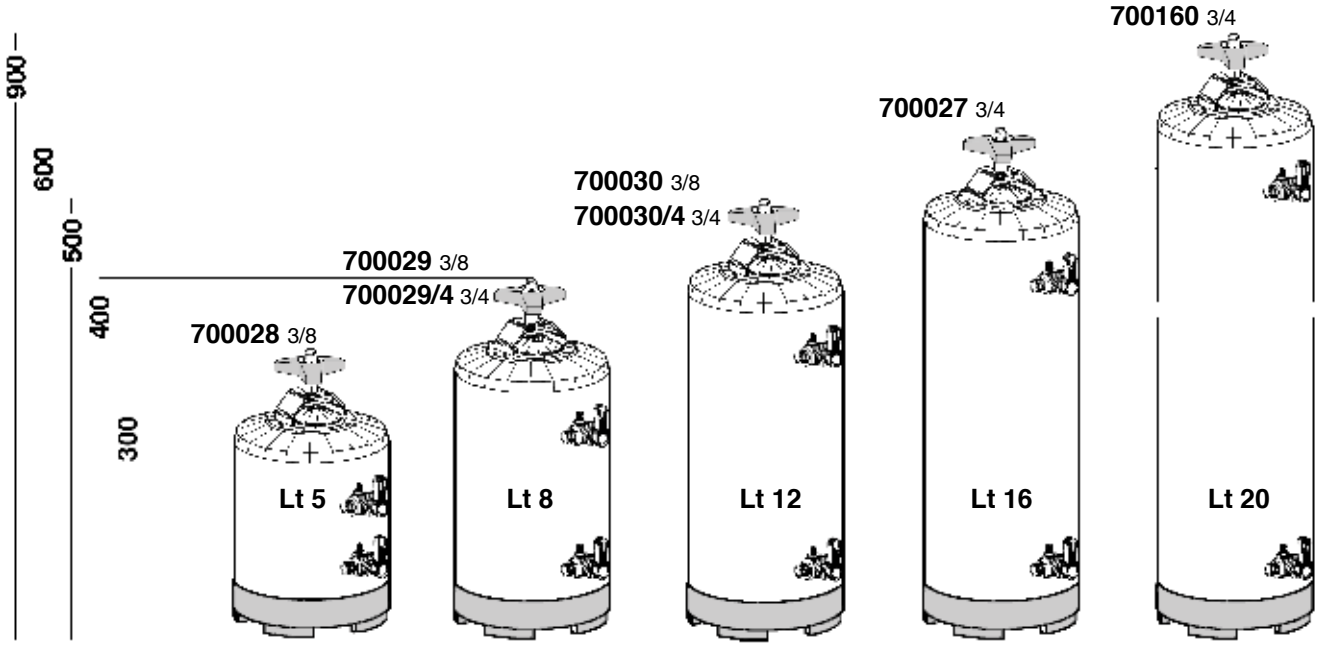

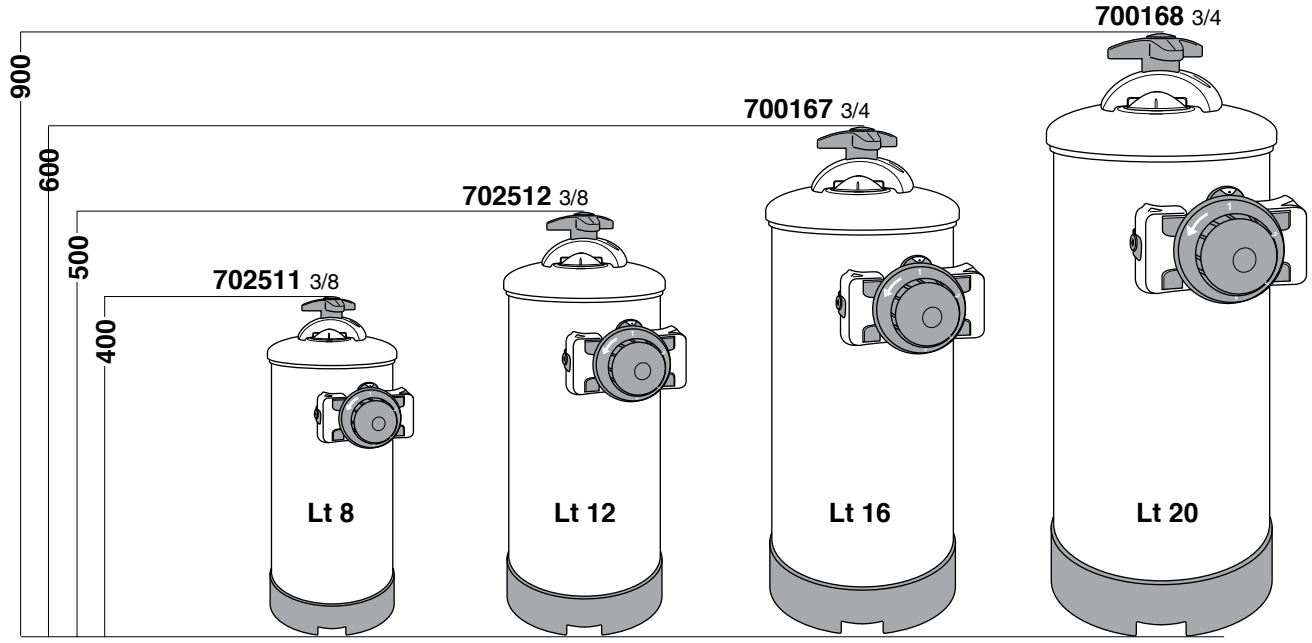

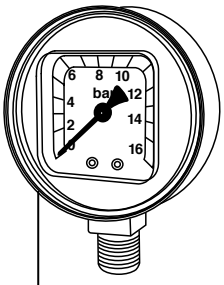

300302 16BAR

manometro consigliato per 620392
suggested manometer for 620392

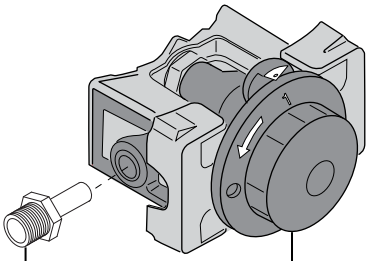

528002 **528001**

517717

NUOVO TAPPO PLASTICA
NEW PLASTIC CAP

INTERCAMBIABILE
INTERCHANGEABLE

528812

620571 =1/4 MF

per collegare 300302 e 620392
for connect 300302 and 620392

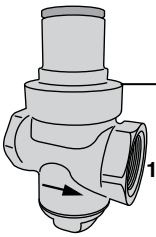

620392

riduttore pressione con attacco manometro
pressure reducer with manometer connection

620400

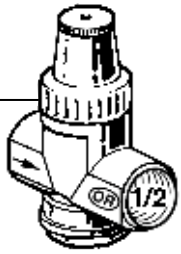

riduttore pressione
pressure reducer

DEPURATORI SERIE ERA

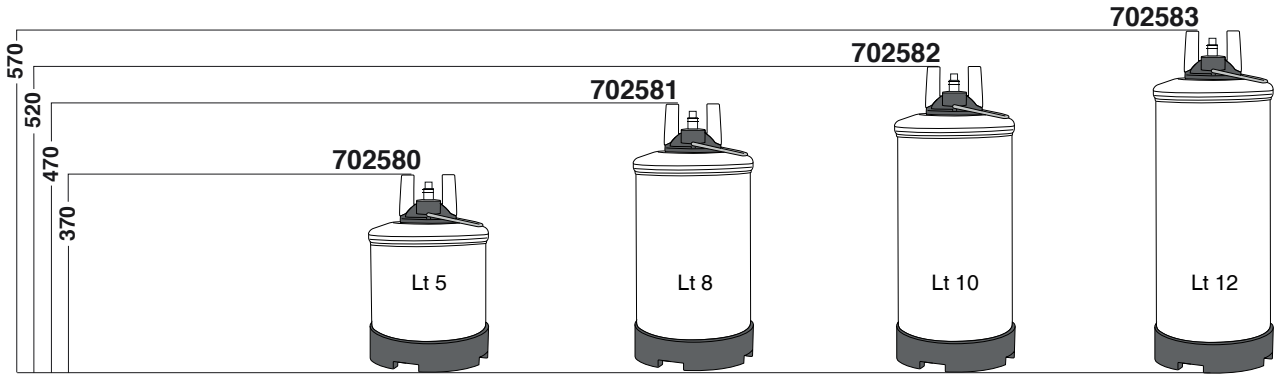

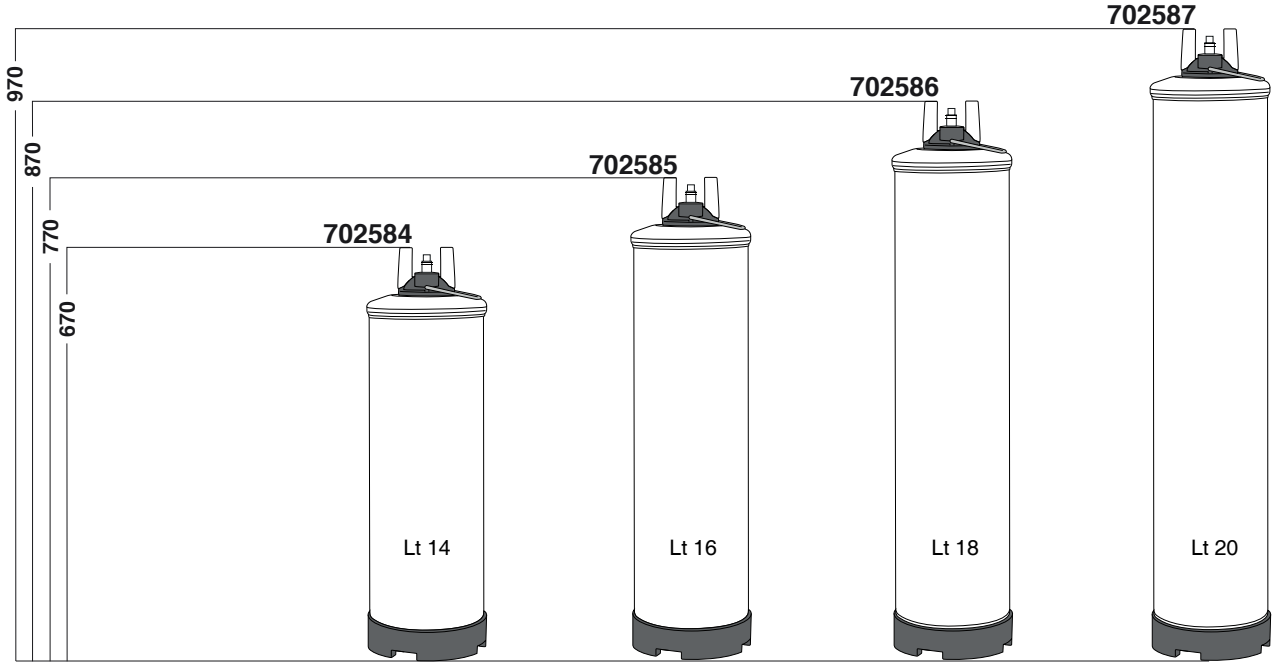

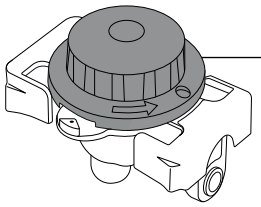

702577 3/8"G

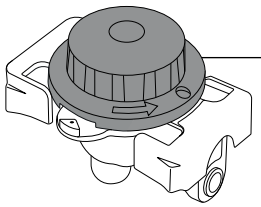

702578 3/4"G

702528

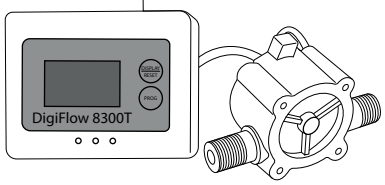

702588

SISTEMA DI RIGENERAZIONE ERA
REGENERATION SYSTEM ERA

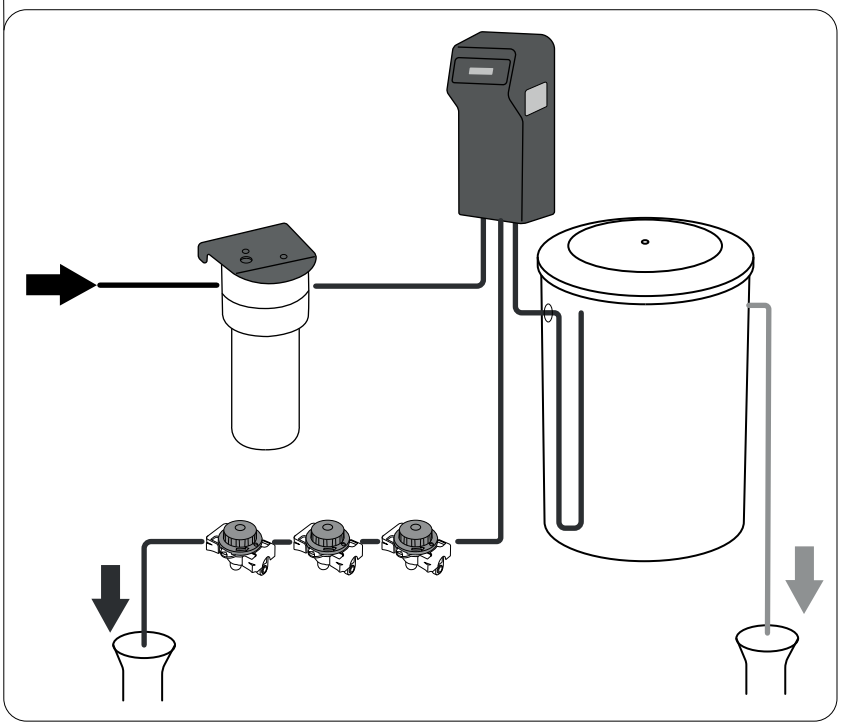

DEPURATORI

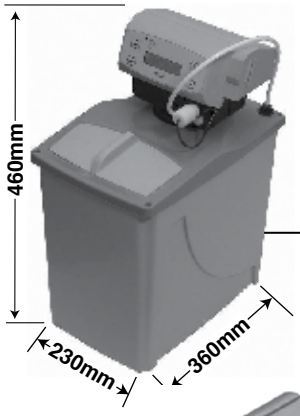

702560
ALIA LT.5

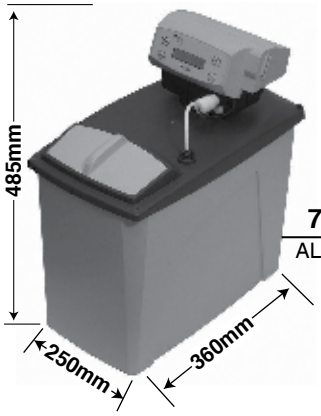

702561
ALIA LT.8

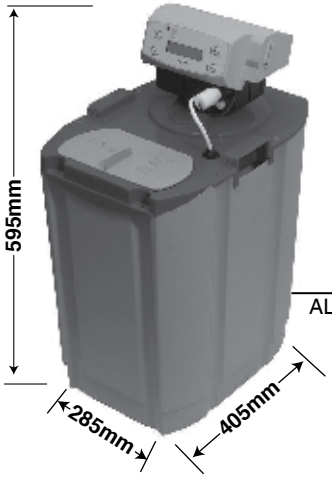

702562
ALIA LT.12

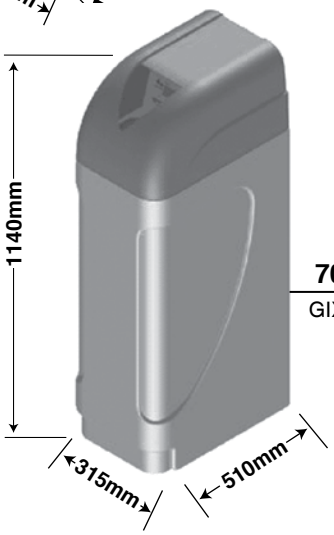

700560
GIX LT. 26

702525
GIX LT. 12

702524
GIX LT. 8

702523
GIX LT. 5

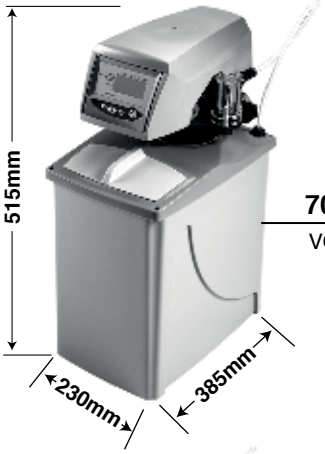

702534
VOL. GIX LT. 5

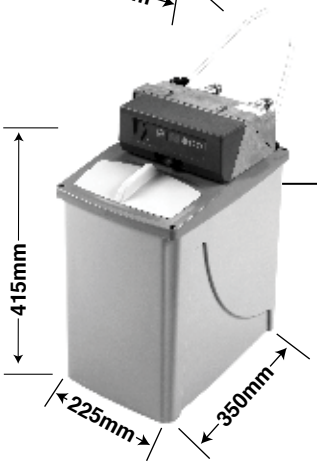

702529
ISI LT. 5

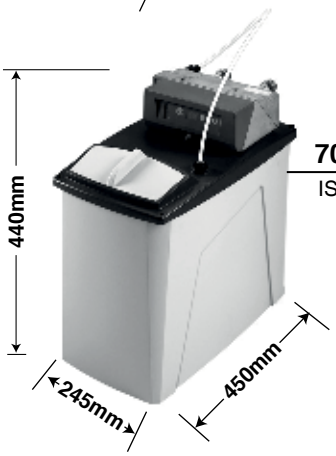

702533
ISI LT. 8

DEPURATORI

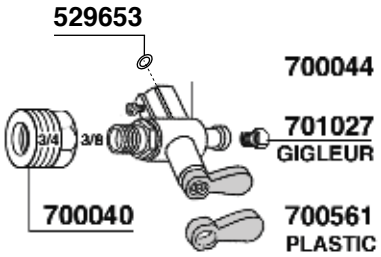
529653
700044
3/4
3/8
701027
GIGLEUR
700040
700561
PLASTIC

620501
620518 8LT
620519 12LT

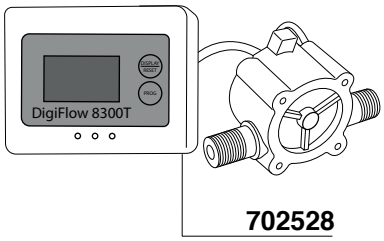
DigiFlow 8300T
702528

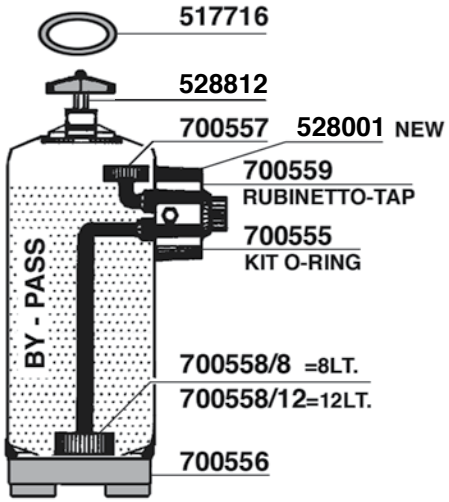
517716
528812
700557
528001 NEW
700559
RUBINETTO-TAP
700555
KIT O-RING
BY - PASS
700558/8 =8LT.
700558/12=12LT.
700556

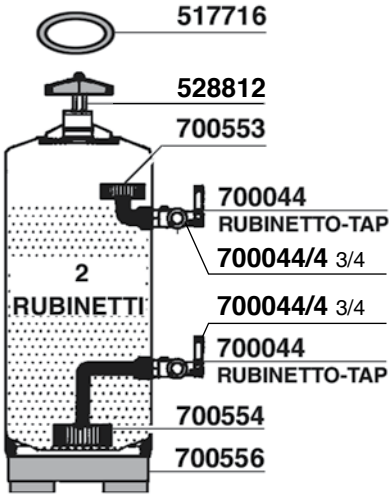
517716
528812
700553
700044
RUBINETTO-TAP
700044/4 3/4
2
RUBINETTI
700044/4 3/4
700044
RUBINETTO-TAP
700554
700556

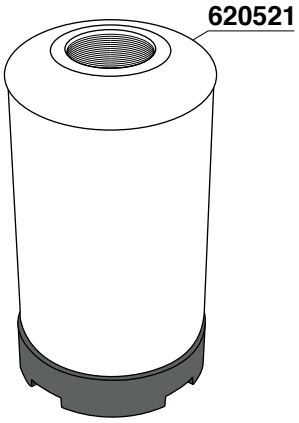
620521

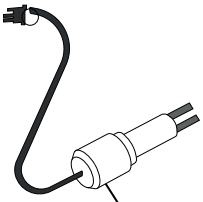
702579
SERIE AL

702526
SERIE GIX

620506
PROVA DUREZZA
HARDNESS TEST

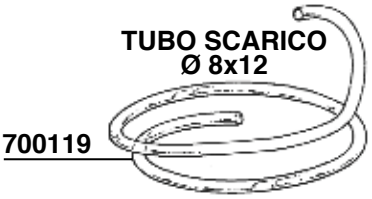
TUBO SCARICO
Ø 8x12
700119

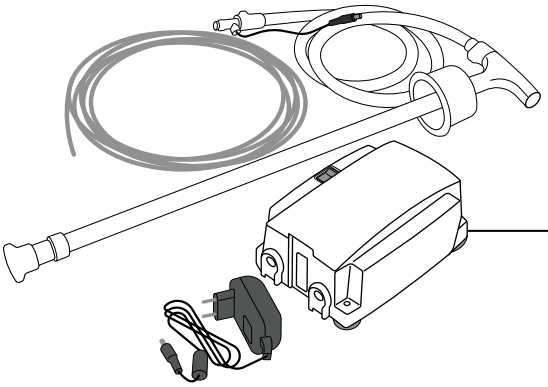
702558
FLOW JET 230V

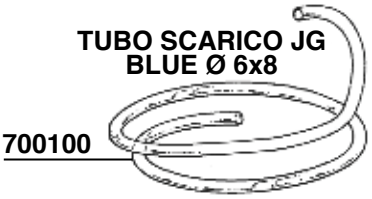
TUBO SCARICO JG
BLUE Ø 6x8
700100

DEPURATORI

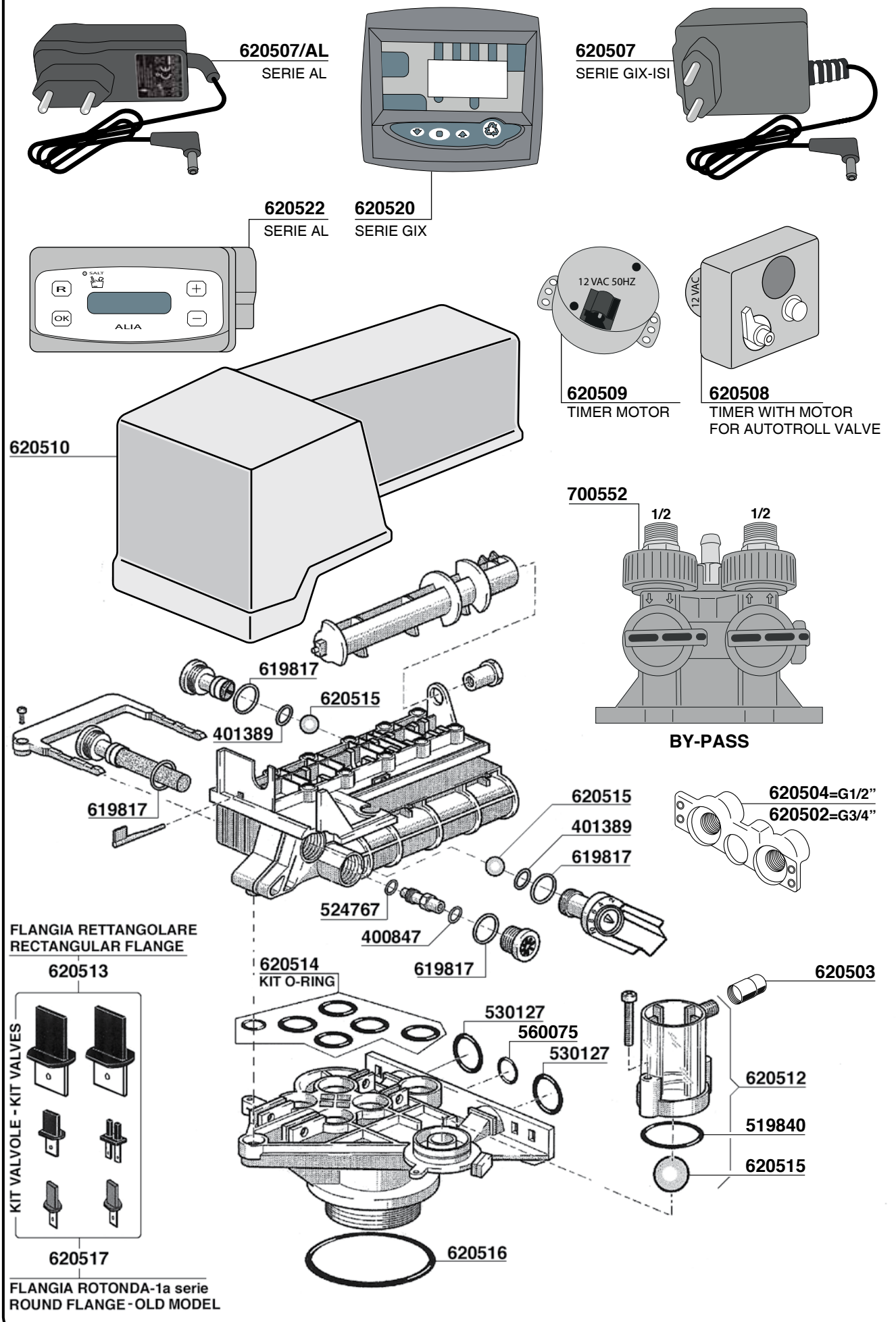
620507/AL
SERIE AL
620507
SERIE GIX-ISI
620522
SERIE AL
620520
SERIE GIX
SALT
R
OK
ALIA
12 VAC 50HZ
12 VAC
620509
TIMER MOTOR
620508
TIMER WITH MOTOR
FOR AUTOTROLL VALVE
620510
700552
1/2
1/2
BY-PASS
619817
620515
401389
619817
620515
401389
619817
620504=G1/2"
620502=G3/4"
524767
400847
619817
FLANGIA RETTANGOLARE
RECTANGULAR FLANGE
620513
620514
KIT O-RING
530127
560075
530127
620503
620512
519840
620515
KIT VALVOLE - KIT VALVES
620517
620516
FLANGIA ROTONDA-1a serie
ROUND FLANGE - OLD MODEL

FILTRI DEPURATORI

KIT CARTUCCIA FILTRANTE
PER DEPURATORI MANUALI
FILTER CARTRIDGE KIT
FOR MANUAL SOFTENERS

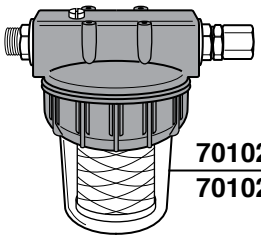

701020 5” 3/8” MF
701021 5“ 3/4” MF

KIT CARTUCCIA FILTRANTE
PER DEPURATORI AUTOMATICI
FILTER CARTRIDGE KIT
FOR AUTOMATIC SOFTENERS

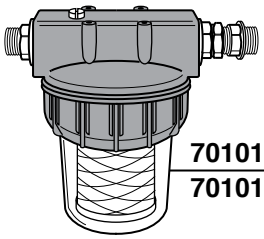

701017 5” 1/2” MM
701016 5” 3/4” MM

KIT CARTUCCIA CARBONI ATTIVI
PER DEPURATORI AUTOMATICI
ACTIVATED CARBON CARTRIDGE KIT
FOR AUTOMATIC SOFTENERS

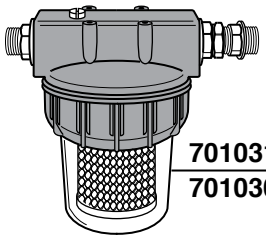

701031 5” 1/2” MM
701030 5” 3/4” MM

KIT CARTUCCIA CARBONI ATTIVI
PER DEPURATORI MANUALI
ACTIVATED CARBON CARTRIDGE KIT
FOR MANUAL SOFTENERS

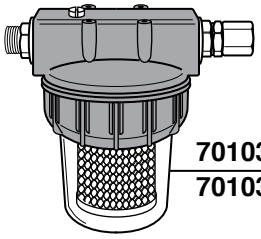

701034 5” 3/8” MF
701035 5” 3/4” MF

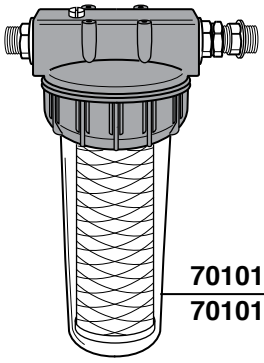

701019 9” 1/2” MM
701018 9” 3/4” MM

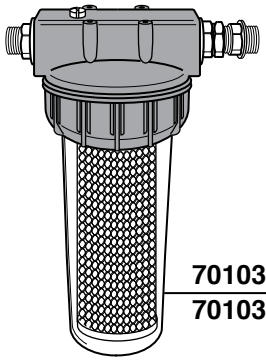

701033 9” 1/2” MM
701032 9” 3/4” MM

CARTUCCIA FILTRANTE
FILTER CARTRIDGE

701022
5”

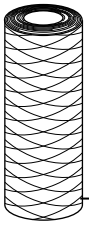

701023
9”

CARTUCCIA CARBONI ATTIVI
ACTIVATED CARBON CARTRIDGE

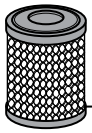

701036
5”

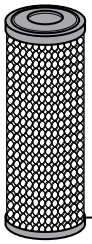

701037
9”

701024
CHIAVE - KEY

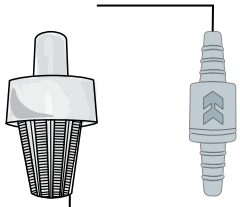

411443

408818

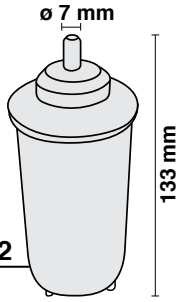

701012
ø 59 mm
FILTRO
DECALCIFICANTE

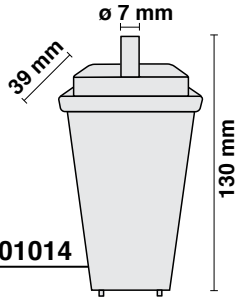

701014
64 mm

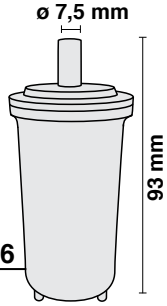

701046
ø 42 mm

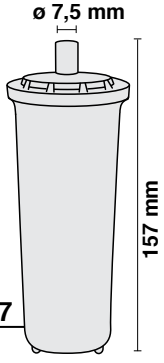

701047
ø 42 mm

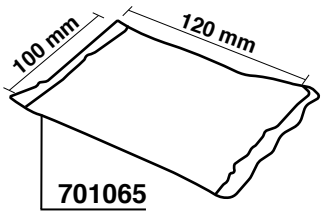

701065

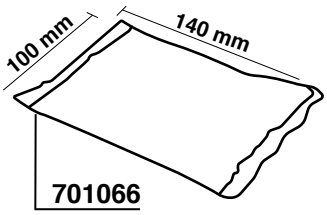

701066

ADDOLCITORE UNIVERSALE
UNIVERSAL WATER SOFTNER

591177 KG.10
591180 KG.25

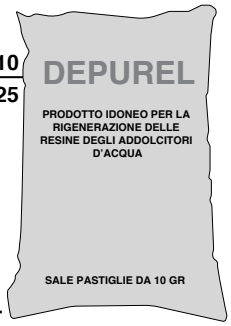

700118
RESINE 25 LT

DEPURATORI ACQUA PRO

702590

MANUAL WATER SOFTENER
LT.8 BY-PASS

702591

MANUAL WATER SOFTENER
LT.12 BY-PASS

702592

AUTOMATIC VOLUMETRIC
WATER SOFTENER LT.6

702593

AUTOMATIC VOLUMETRIC
WATER SOFTENER LT.8

702594

AUTOMATIC VOLUMETRIC
WATER SOFTENER LT.12

TRATTAMENTO ACQUA

702521 3/8 — **702522** 3/8 JG

702521 3/8 — **702522** 3/8 JG

702521 3/8 — **702522** 3/8 JG

702571

702518
2250 Lt

702519
3800 Lt

702527
0,2 micron

702570
6000 Lt.

702563

702564
WITH TANK

702559
HF40

702565
HF40-S

702566
HF37

702567
MEMBRANE

702568
CARBON BLOCK
0,5 um

702528

702520
CARTINE TORNASOLE
LITTMUS PAPER

620506
KIT PROVA DUREZZA
HARDNESS TEST

POMPE ROTATIVE

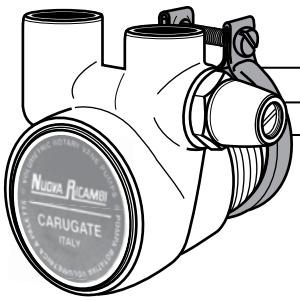

700048 100 Lt/h
700048/X 100 Lt/h INOX-STAINLESS STEEL
700048/2 200 Lt/h

700008 110 Lt/h NSF
700008/X 110 Lt/h NSF INOX-STAINLESS STEEL
700008/2 200 Lt/h NSF
700012/X 150Lt/h NSF INOX-STAINLESS STEEL

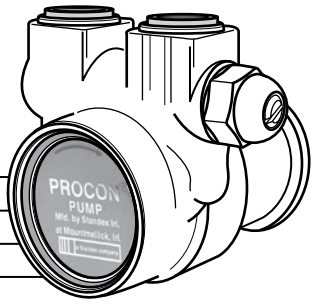

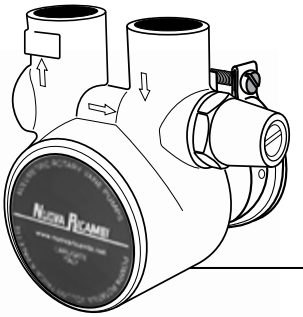

700054 200 Lt/h

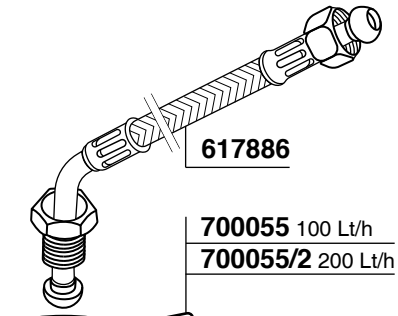

617886

700055 100 Lt/h
700055/2 200 Lt/h

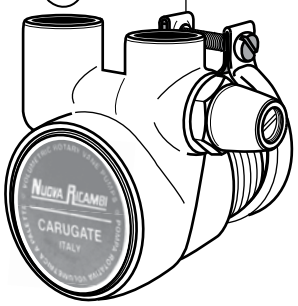

700047 50 Lt/h
MINIPOMPA

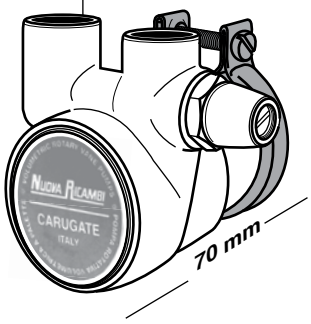

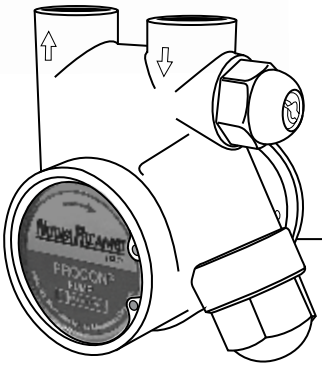

700008/F 150 Lt/h
CON FILTRO
WITH FILTER

700050

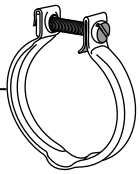

620406 150 Lt/h
620406/X 150 Lt/h INOX-STAINLESS STEEL
620406/2 200 Lt/h

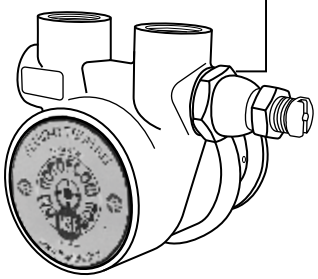

620441
CIECA-BLIND
620442
CON RITEGNO
ONE WAY

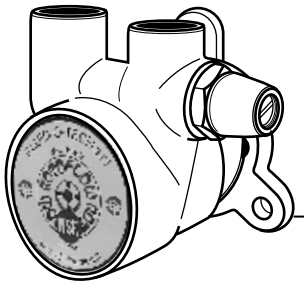

620407/1 100 Lt/h
620407 200 Lt/h

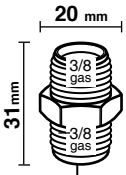

514901
514903 TEA

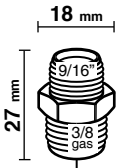

300055
USA

710000 100 Lt/h
TRASCINAMENTO MAGNETICO
MAGNET DRIVE ROTARY VANE PUMP

710001 200 Lt/h
TRASCINAMENTO MAGNETICO
MAGNET DRIVE ROTARY VANE PUMP

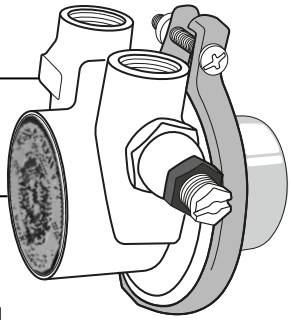

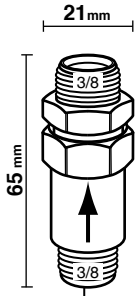

700011/E

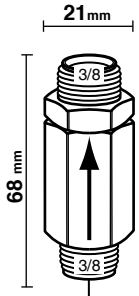

700011

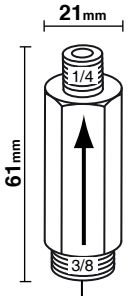

412845

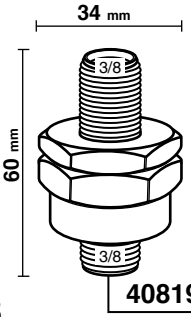

408194
FILTER

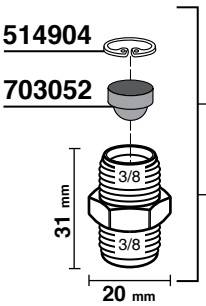

514902
FILTER

514902/X
FILTER STAINLESS STEEL

ELETTROPOMPE

621347=10μF V220
702311=16μF V110

700154/22=V220/50 W165 HP0,2
170x165x185 mm
700085/22=V220/50/60 W330 HP0,5 UL USA
225x175x180 mm
700085/11=V110/60 W330 HP0,5 UL USA
225x175x180 mm

700042

700048=100Lt/h
NUOVA RICAMBI

185 mm
180 mm
225 mm
170 mm
175 mm
165 mm

700032/22=V220/50 W165 HP0,2

621347
CAPACITOR
CONDENSAT.
10 μF

185 mm
165 mm
130 mm

700084/22
V220/50/60 W165 HP0,2 WITH CABLE

621347=10μF V220

700155/22=V220/50 W150 HP0,2

523082

521923

523082

180 mm
185 mm
165 mm

508911 RUBBER FOOT

620407/1=100Lt/h
FLUID-O-TECH

700171/22=V220/50 W150 HP0,2

170 mm
200 mm
126 mm

700095=V220/230-240 W300 HP0,4

μF 6,3 621112

700182

700182

700182

514901

524555

514901

524555

115 mm
140 mm
135 mm

703024
RUBBER FOOT

700042

700048=100Lt/h
NUOVA RICAMBI

703023
MOTOR V220 W260 HP0,4

700008=110 Lt/h NSF PROCON
700008/X=110 Lt/h NSF INOX
STAINLESS STEEL PROCON

MOTORE RAFFREDDATO AD ACQUA - MOTOR WATERCOOL

700086/22=V220/50/60 W150 HP0,2
700086/11=V110/60 W120 HP0,1

621112=6,3μF 220V
621113=25μF 110V

110 mm
150 mm
125 mm

MOTORE PICCOLO - SMALL MOTOR

ELETTROPOMPE COMPATIBILI FAEMA

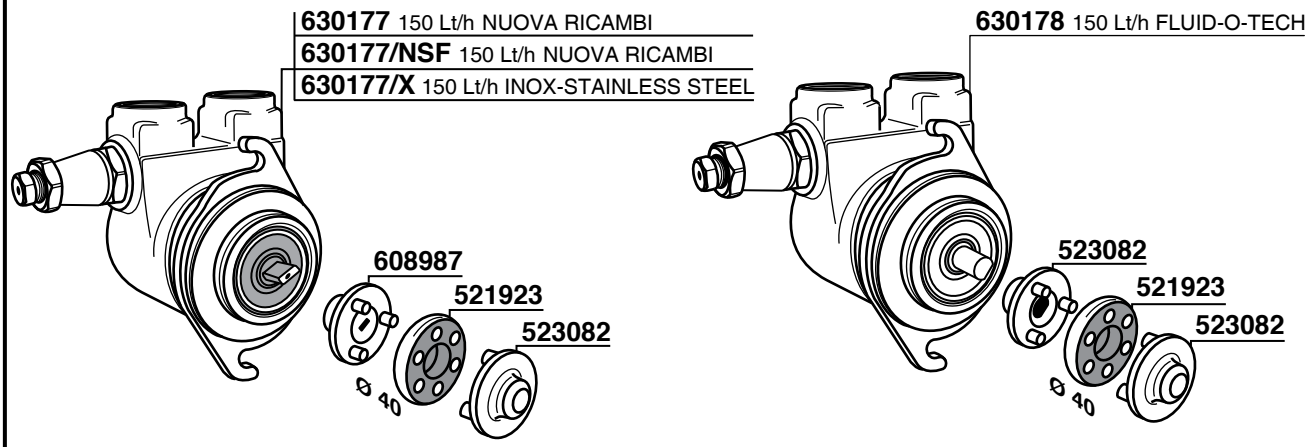

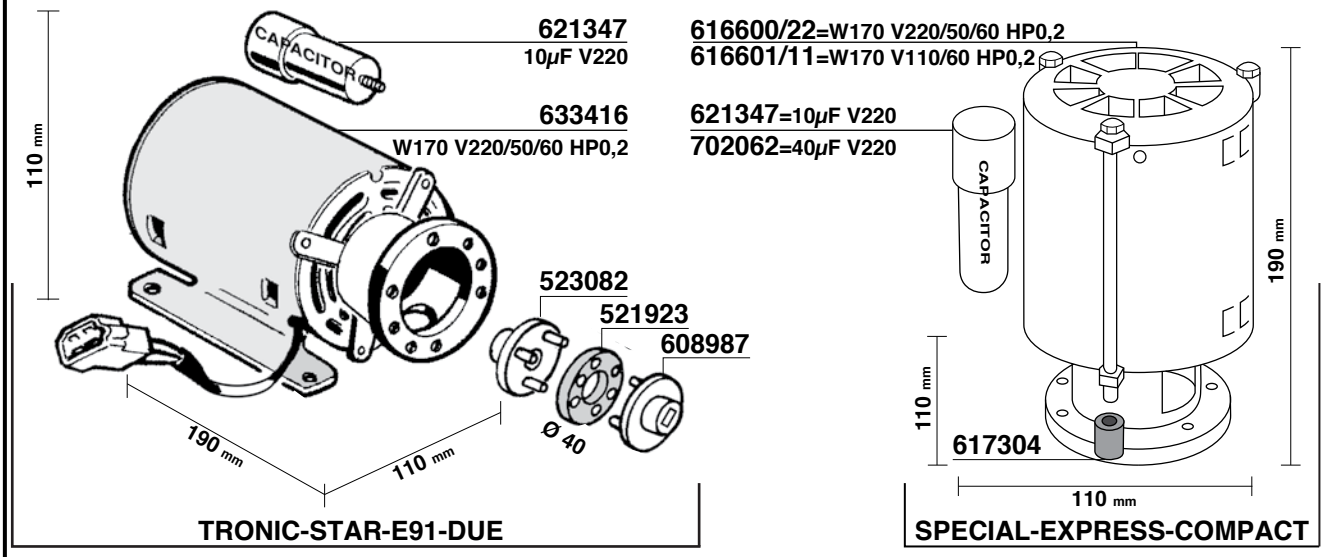

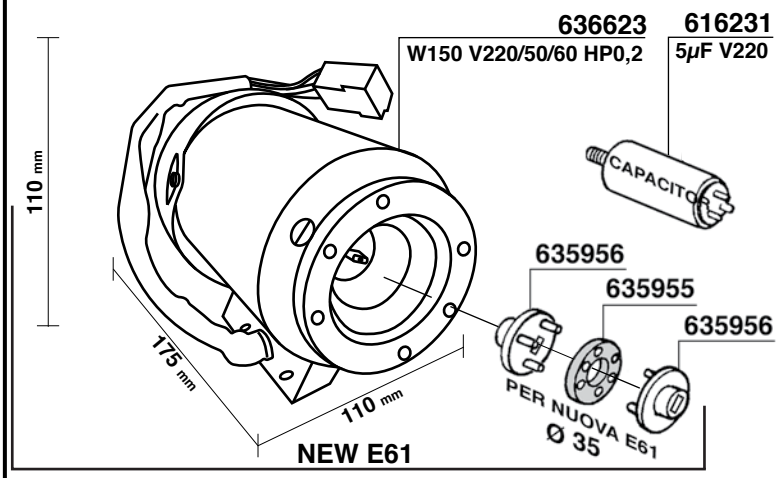

ELETTROPOMPE

FASCETTA IN NYLON 6,6

527000	120x2,5
527002	160x2,5
527003	200x3,6
527005	300x3,6

617170	INVENSYS CP3A - 220V 65W
617160/24	ULKA EX5-24V 48W
617160/22	ULKA EX5-220V 48W
617160/11	ULKA EX5-120V 41W
617165	ULKA EP5 V24 50-60Hz
617164	ULKA EP5-220V 48W
617167	ULKA EAX5-120V 52W
617168	ULKA EP4 230V 50Hz 48W

700043

1/8

700197 4x7
700197/8 5x8

620408

SILICONE

620413

617163

ULKA
INVENSYS

1/8

617162

560048

NYLON 4X6

410071
HOSTAFLON

617162

460202

617163

703220

700197 =4x7
700197/8=5x8

SILICONE

700043/M

615978/D=CON DIODO
WITH DIODE

700043/C

620402 =V220 W70
620402/11=V110 W70
620402/24=V24 W45

700043

1/8

FLUIDOTECH

1/8

NYLON 4X6

560048

MICROPOMPA VAPORE
MANUAL RESETTING

415675=V230/50
414061=V115/60

700043/M

BY-PASS **620409**

620419
MILK PUMP 24V
FLUID-O-TECH
TYPE M36X30/I

700013
60W 24V DC
MICRO VANE
BRUSHED MOTOR

700072
48W 24V DC 2252 rpm 100Lt
ROTARY PUMPS
WITH MOTOR MBT

700073
90W 24V DC 4000 rpm 100 Lt
BRUSHLESS MOTOR

TUBI

TUBI GOMMA - RUBBER HOSES
FOOD QUALITY - BAR 25 - t.110°C

3/8F - 3/8F CONICO - CONICAL

700014 50 cm
700015 60 cm
700016 80 cm
700017 150 cm
700018 200 cm

TUBI INOX - STAINLESS STEEL HOSES
BAR 12 - t.90°

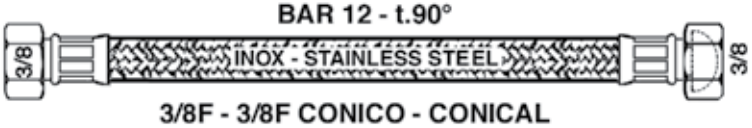

3/8F - 3/8F CONICO - CONICAL

700182 50 cm
700183 80 cm
700196 100 cm
300050 120 cm
700184/S 150 cm
300051 210 cm

TUBI INOX - STAINLESS STEEL HOSES
BAR 12 - t.90°

3/8F - 3/8F CONICO 1CURVA - CONICAL 1CURVE

700186 50 cm
700184 150 cm
700185 200 cm

TUBI INOX - STAINLESS STEEL HOSES
BAR 12 - t.90°

3/4F -3/4F - PIANO 1CURVA - FLAT 1CURVE

700187 150 cm
700187/2 200 cm

TUBI INOX - STAINLESS STEEL HOSES
BAR 12 - t.90°

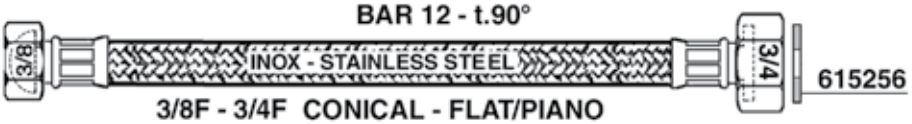

3/8F - 3/4F CONICAL - FLAT/PIANO

300052 150 cm

1/8 F - 1/8 F PIATTO/ FLAT

700250 37 cm

TUBI INOX - STAINLESS STEEL HOSES
BAR 12 - t.90°

3/8F - 3/4F - PIANO 1CURVA - FLAT 1CURVE

300053 200 cm
300054 80 cm

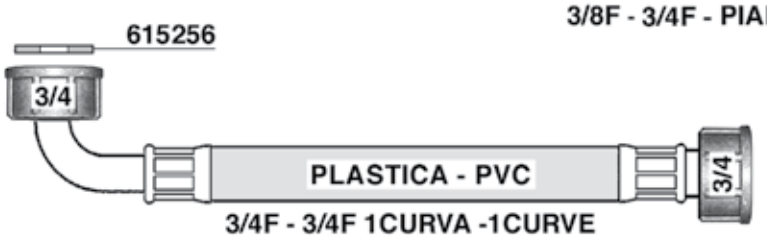

3/4F - 3/4F 1CURVA -1CURVE

615273 200 cm
615274 150 cm

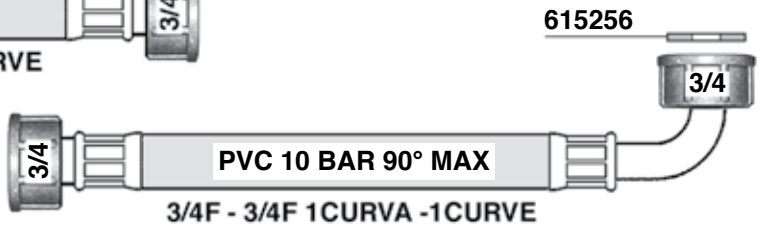

3/4F - 3/4F 1CURVA -1CURVE

615275 200 cm
615276 150 cm

TUBI

TUBI GOMMA - RUBBER HOSES
BAR 25 - t 110°C

GOMMA - RUBBER

700003 Ø 8x17
700003/10 Ø 10x17

TUBI SILICONE - SILICON HOSES

SILICONE - SILICON

700197/6 Ø 3x6
700197 Ø 4x7
700197/8 Ø 5x8
700197/9 Ø 6x9
700197/10 Ø 10x15
700197/12 Ø 8x12

TUBO GAS - GAS HOSE

700198 Ø 13x20

TUBI RILSAN - RILSAN HOSES
BAR 20 - t 20°C

RILSAN

560048 Ø 4x6
560049 Ø 6x8

TUBI TEFLON - TEFLON HOSES

TEFLON

408593 Ø 4x2
560047 Ø 5x3
405335 Ø 6x4
560049/T Ø 6x8

TUBI SCARICO TRASPARENTI CON FILO IN METALLO
DRAIN TRASPARENT HOSES WITH METAL WIRE

ELISPIR

700031 Ø 12x18
700031/14 Ø 14x20
700031/16 Ø 16x23
700031/18 Ø 18x25

ELISPIR

700037 Ø 20x26
700037/25 Ø 25x33
700037/30 Ø 30x38

TUBI SCARICO NERI CON FILO IN METALLO
DRAIN BLACK HOSES WITH METAL WIRE

ELISPIR

700060 Ø 16x23
700060/15 Ø 15x22

RAME - COPPER

M701007 Ø 2x4
M701006 Ø 4x6
M701087 Ø 6x8
M701084 Ø 8x10
M701085 Ø 10x12

TUBO SCARICO - DRAIN HOSES
PLASTICA NERO - BLACK PLASTIC

560058 Ø 14x18
560059 Ø 16x20
560060 Ø 20x24

700078 8-12
700004 12-22
700088 20-32
700079 25-40
700080 30-45

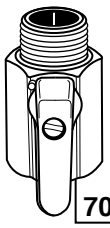

700169/M
3/8M - 3/8F

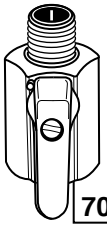

700170/V
1/4M - 1/4F

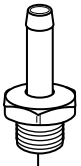

700053
Ø4 - 1/8

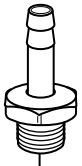

700043
Ø6 - 1/8

700000
3/8
700000/C
3/8 CHROMED

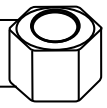

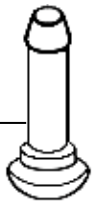

700001
Ø8

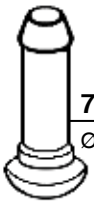

700001/10
Ø10

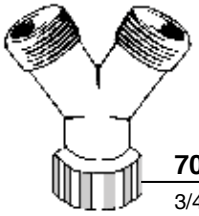

700188
3/4 - PLASTIC

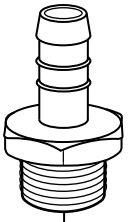

700033
Ø12 - 1/2

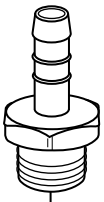

700002
Ø8 - 3/8

552273

552273/6

552273/8

547241

547242

547244

547245

547246

RACCORDI

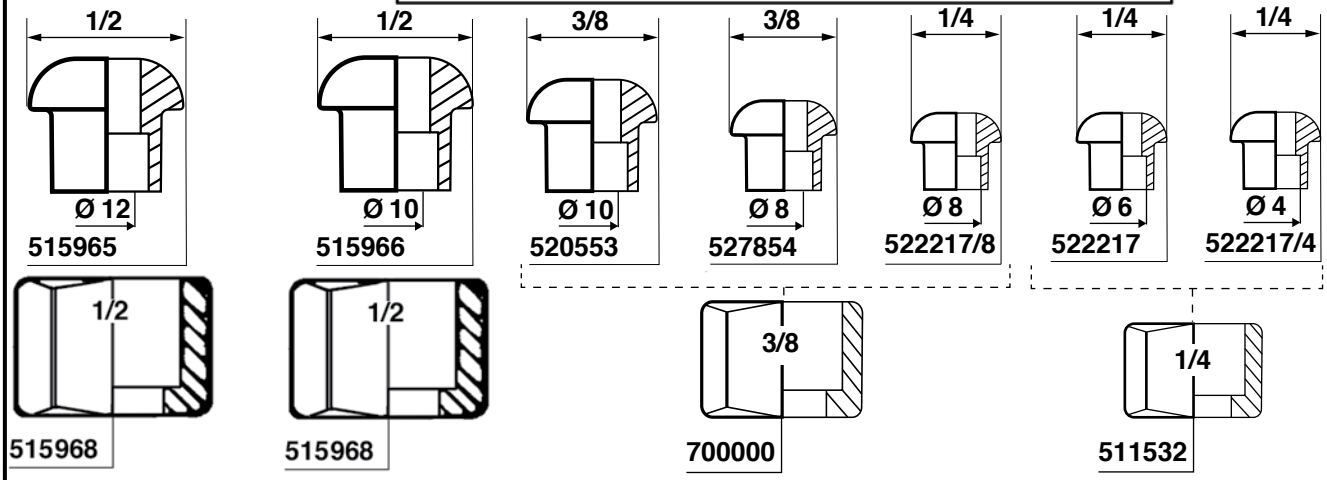

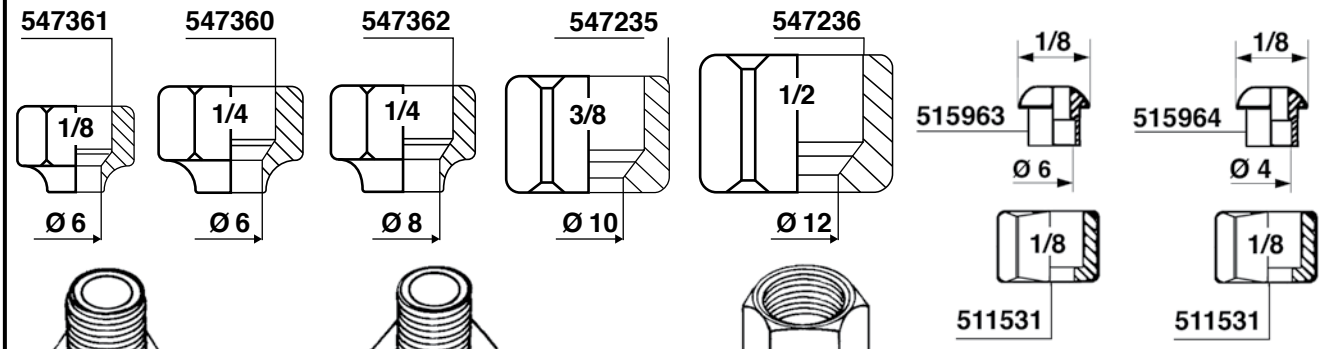

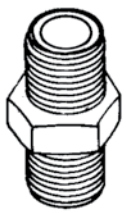

700023= 1/8M
700039= 1/4M
514901= 3/8M
700034= 1/2M
620401= 3/4M
514903= 3/8M TEA

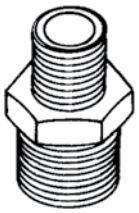

700056= 1/8M - 1/4M
620581= 1/8M - 3/8M
700036= 1/4M - 3/8M
700035= 3/8M - 1/2M
700041= 3/8M - 3/4M
700098= 1/2M - 3/4M
700114= 1"M - 3/4M
620578= 1''M - 3/8M

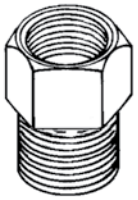

620399= 1/8F - 1/4M
700046= 1/8F - 3/8M
620398= 1/4F - 1/8M
700082= 1/4F - 3/8M
620582= 3/8F - 1/8M
700091= 3/8F - 1/4M
700089= 3/8F - 3/8M
700090= 3/8F - 1/2M
700092= 1/2F - 3/8M
700093= 3/4F - 3/8M
700083= 3/4F - 1/2M

300055
9/16 inch
300056
5/8 inch

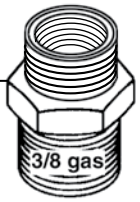

for USA

700040

700059

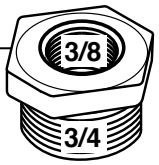

522130

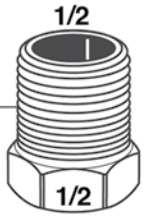

522129
12 mm
547275
10 mm

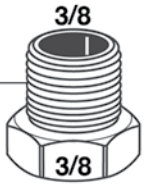

TAPPO FEMMINA-FEMALE PLUG

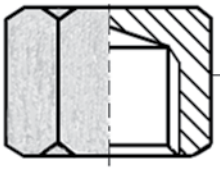

620580/1=1/8F
620580/2=1/4F
620580/3=3/8F
620580/4=1/2F

GUARNIZIONE TEFLON
TEFLON GASKET

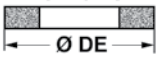

529010/1 = ØDE 1/8
529010/2 = ØDE 1/4
529010/3 = ØDE 3/8
529010/4 = ØDE 1/2
529010/5 = ØDE 3/4

GUARNIZIONE RAME
TEFLON COPPER
524551 = ØDE 1/8

TAPPO MASCHIO-MALE PLUG

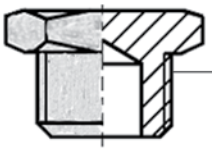

620579/1=1/8M
620579/2=1/4M
620579/3=3/8M
620579/4=1/2M

GUARNIZIONE TEFLON
TEFLON GASKET

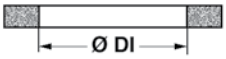

529011/1 = ØDI 1/8
529011/2 = ØDI 1/4
529011/3 = ØDI 3/8
529011/4 = ØDI 1/2
529011/5 = ØDI 3/4

RACCORDI

620550=1/8M
620551=1/4M
620552=3/8M
620553=1/2M

620554=1/8F
620555=1/4F
620556=3/8F
620557=1/2F

620558=1/8FFM
620559=1/4FFM
620560=3/8FFM
620561=1/2FFM

620583=1/8FMM
620584=1/4FMM
620544=3/8FMM

620585=1/8MMF
620586=1/4MMF

620588=MFF

620562=1/8M
620563=1/4M
620564=3/8M
620565=1/2M

400226=1/8M-1/4M

620566=1/8F
620567=1/4F
620568=3/8F
620569=1/2F

620570=1/8MF
620571=1/4MF
620572=3/8MF
620573=1/2MF

620499=1/4M-1/4F

400158=1/8F Ø 4

620549=3/8MM-1/4F

703068=1/2MM
703058=1/2MM-1/4F

400157=1/8F Ø 6
400159=1/8F Ø 4

408280=1/8M Ø 6

410761=1/8M Ø 4

410760=1/8M Ø 4
408858=1/8M Ø 6
410762=1/4M Ø 4
410763=1/4M Ø 6

RACCORDI

700043

620587

700043/C

700043/M

620547=1/8M Ø 6

620548=1/8M Ø 6

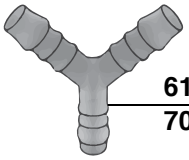

617166 6 mm
700671 8 mm

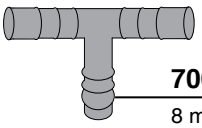

700692
8 mm

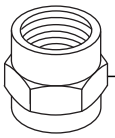

620574=1/8F
620410=1/4F
620411=3/8F
620575=1/2F

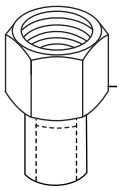

620576=1/8F - 1/4F
620412=1/4F - 3/8F
620577=3/8F - 1/2F
620546=1/4F - 1/4M

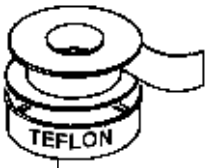

700022
mt.12x12mmx0,07mm

591671
TEFLON THREAD

PIEDINI

GOMMA NERA - BLACK RUBBER

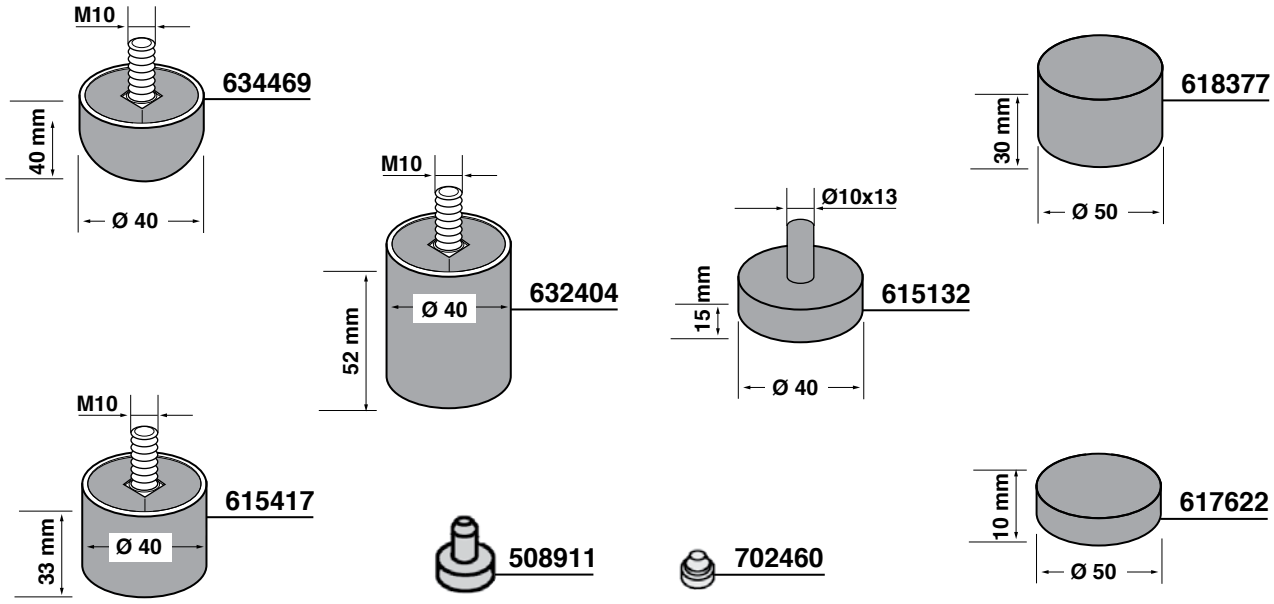

PLASTICA NERA - BLACK PLASTIC

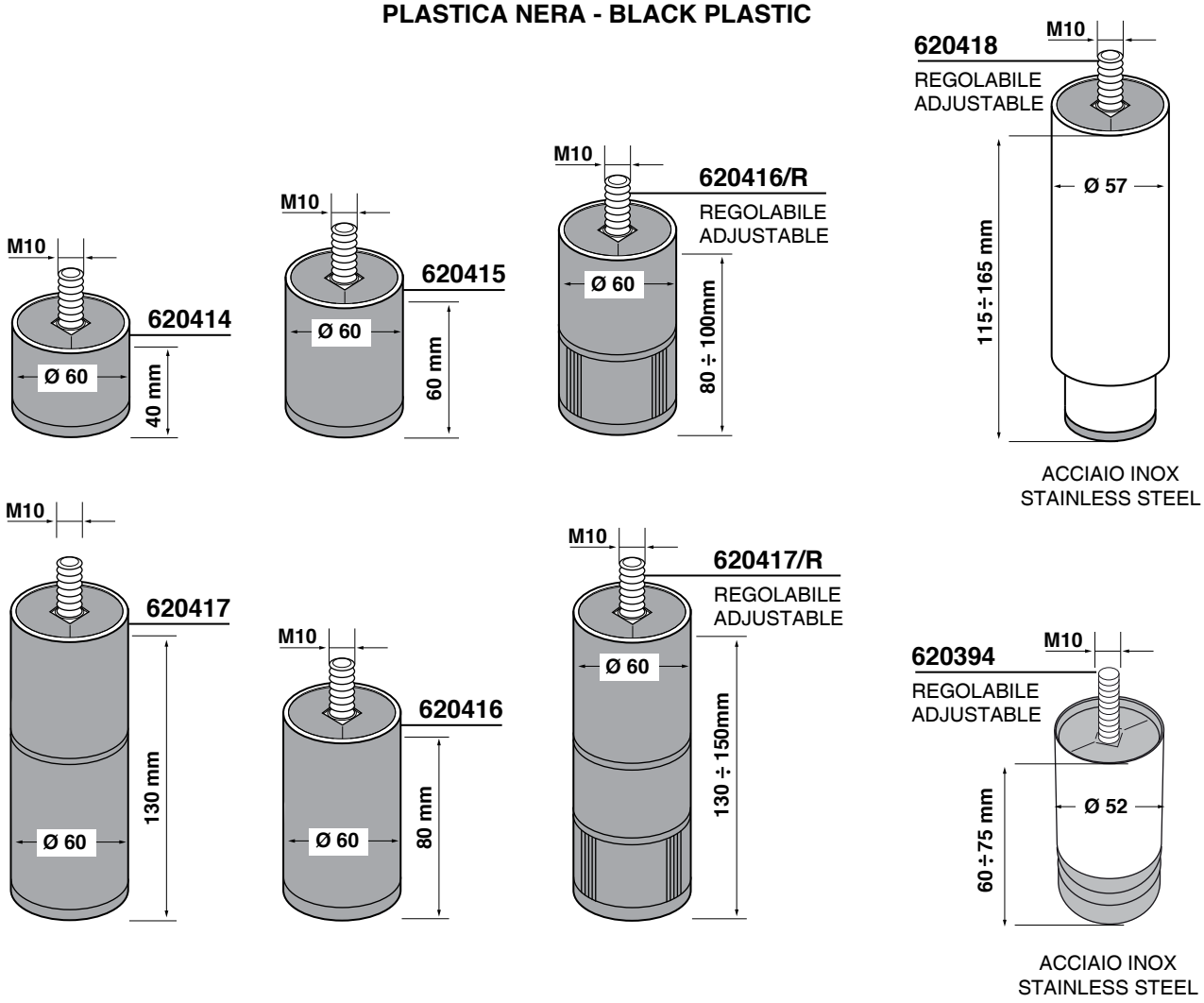

CAPPUCCINATORI

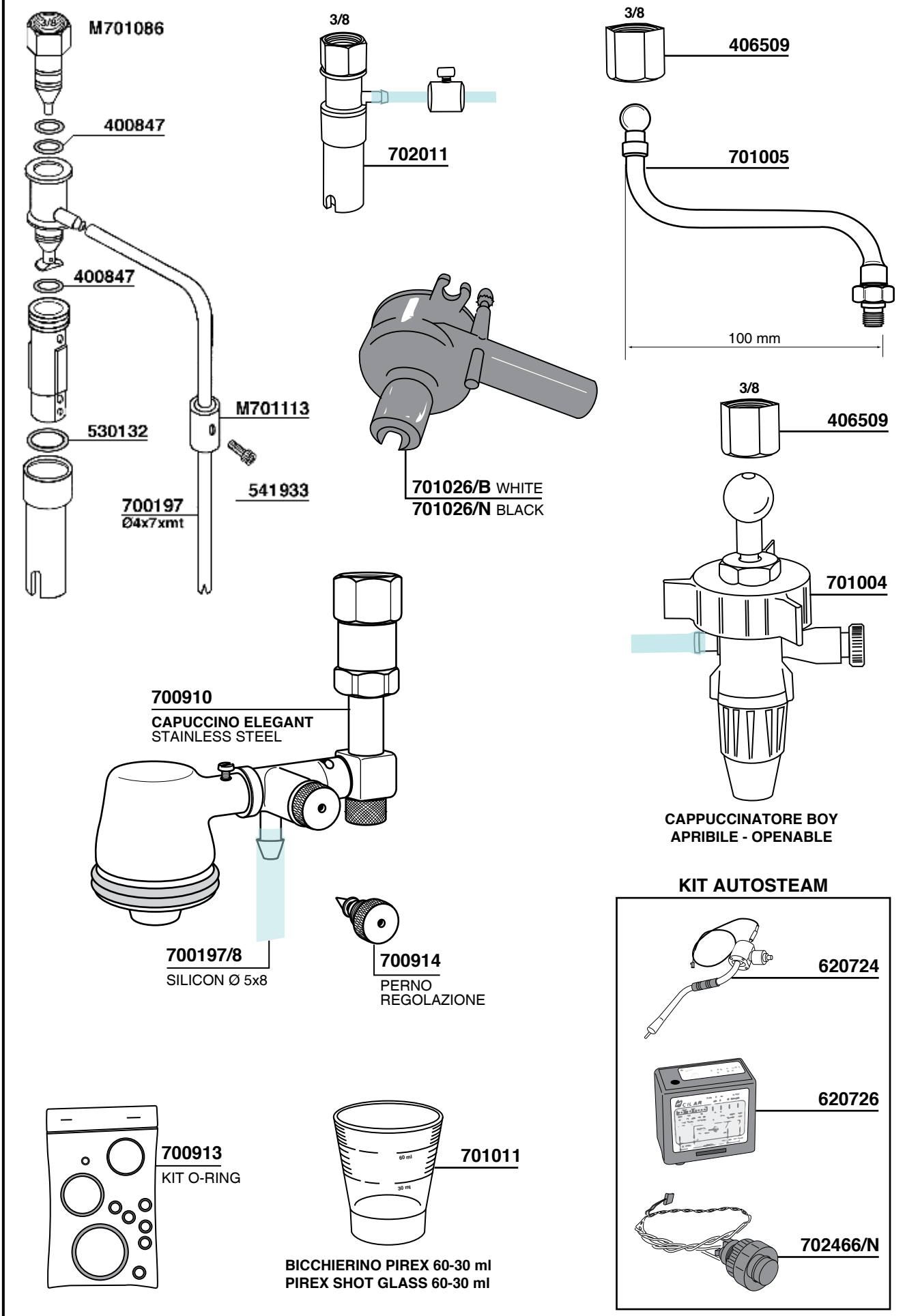

MANOPOLE

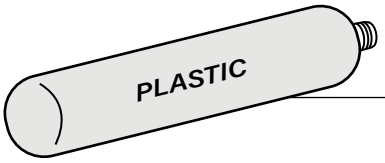

630407
M10

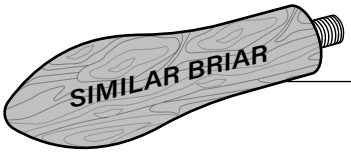

704007
M12

700790
TAPPO CROMATO
CHROMATE PLUG

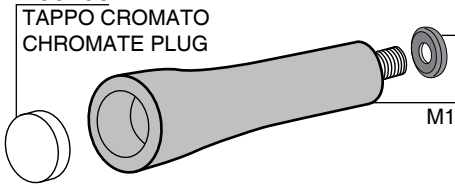

700791/A

700791
M12 ORIGINAL

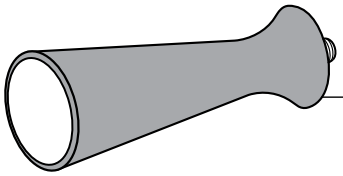

700886/C
ORIGINAL

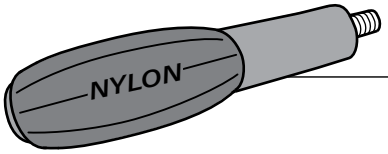

700690
M10

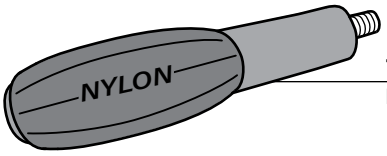

700697
M12

617940
TAPPO CROMATO
CHROMATE PLUG

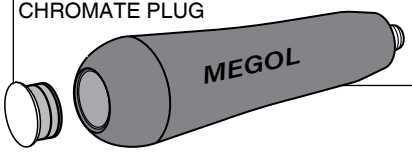

M632317
M12

617940
TAPPO CROMATO
CHROMATE PLUG

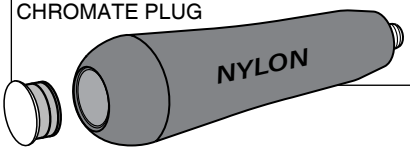

632317
M12 OPAQUE

632316/M
M10

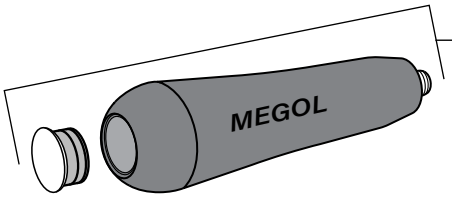

617940
TAPPO CROMATO
CHROMATE PLUG

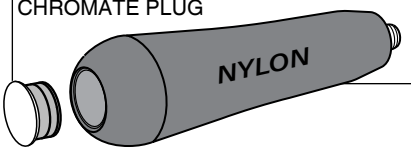

632316
M10

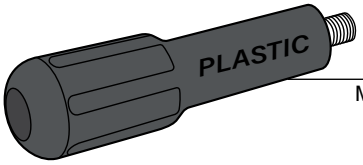

617942
M12 OPAQUE

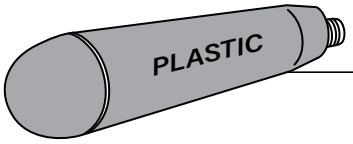

632327
M10

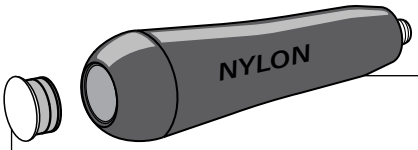

632312
M12 SHINING

617940
TAPPO CROMATO
CHROMATE PLUG

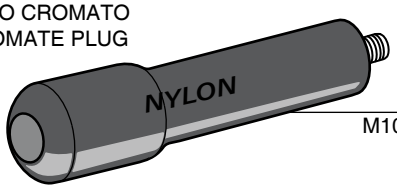

617938
M10 SHINING

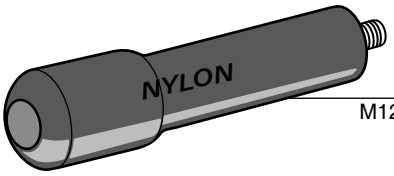

700317
M12 SHINING

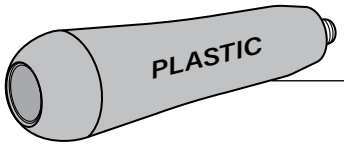

632306 YELLOW
632304 GREEN
M12

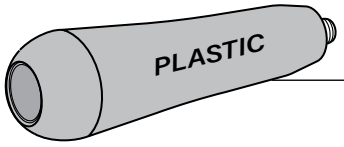

632303 GREEN
M10

DISPONIBILI SU RICHIESTA IN ALTRI COLORI

AVAILABLE ON REQUEST IN OTHER COLORS

INOX STAINLESS STEEL

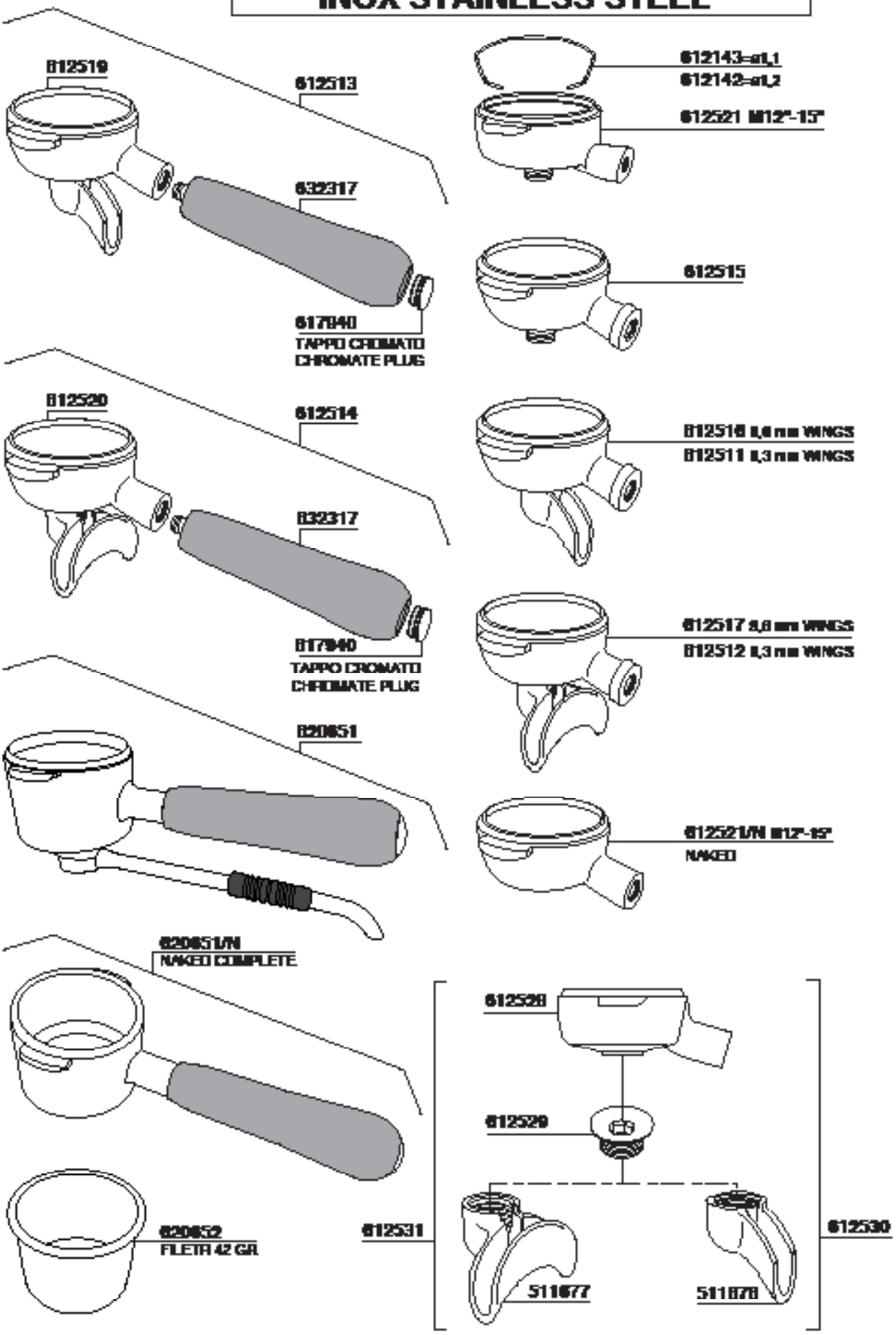

VARI

INOX STAINLESS STEEL

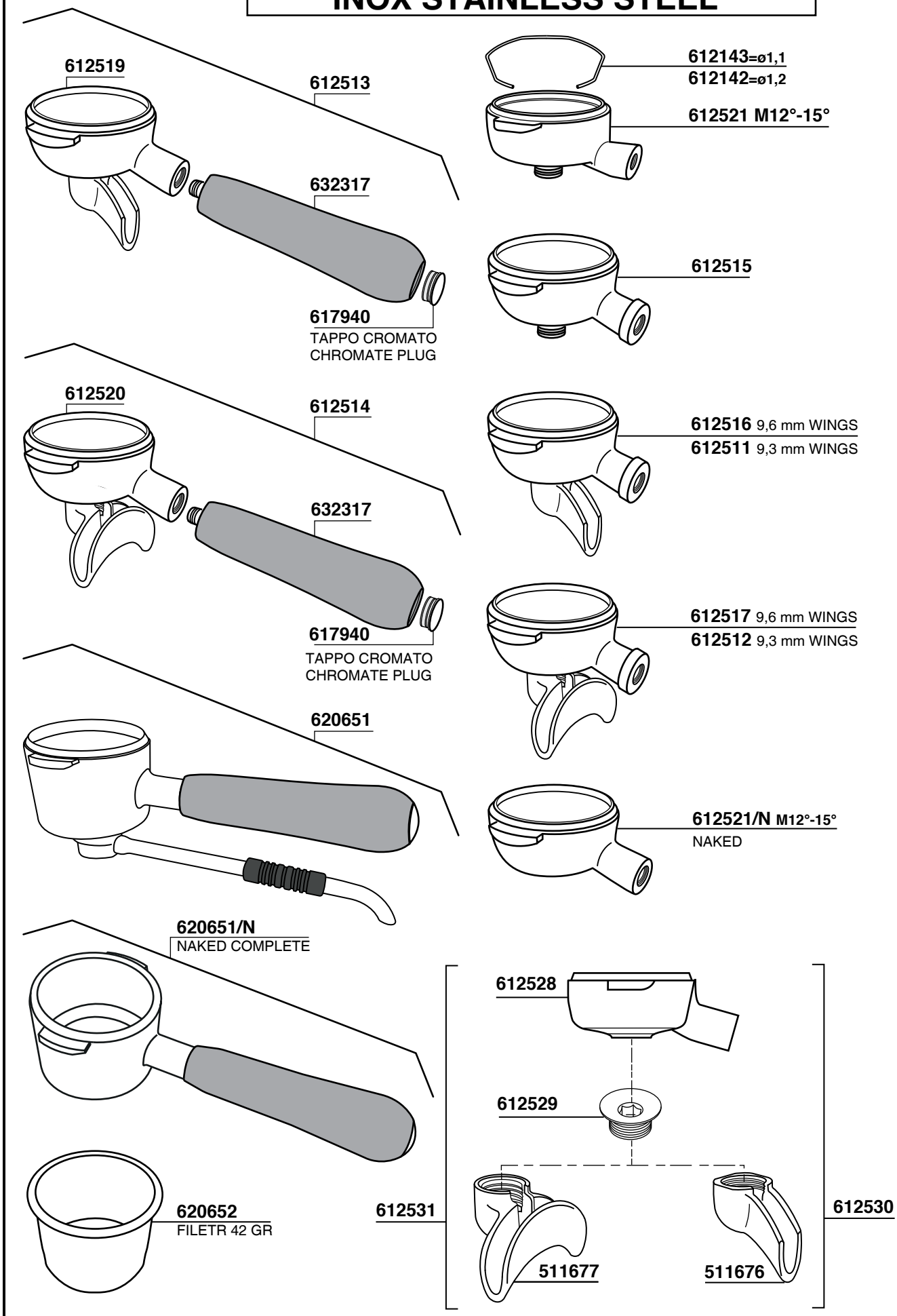

PRODOTTI CHIMICI

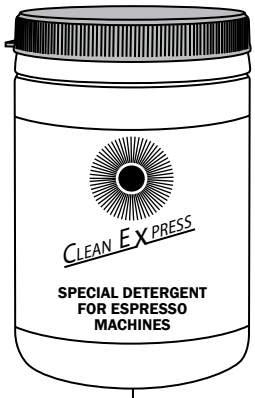

700019
900 gr

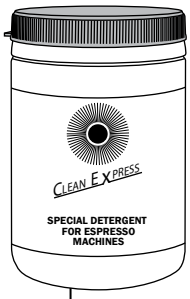

591182
60 TABLETS
2,5 gr each

591186
100 TABLETS
1 gr each

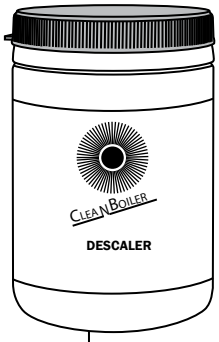

700020
1000 gr

591195
900 gr
591196
250 gr

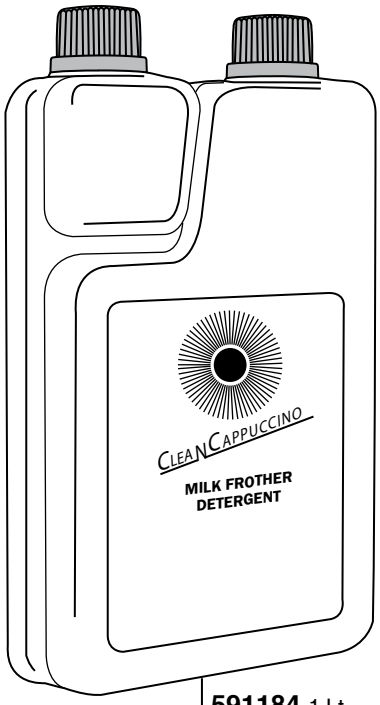

591184 1 Lt

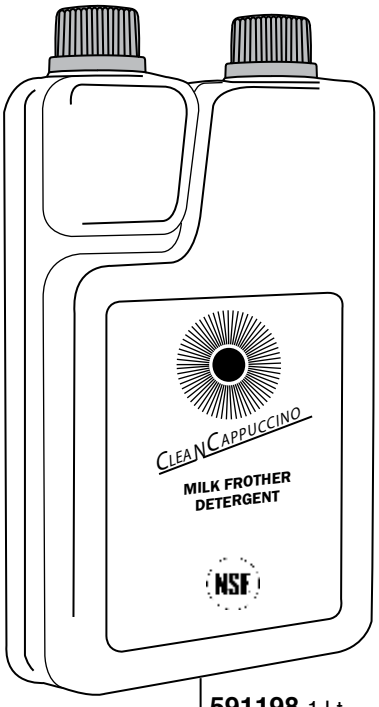

591198 1 Lt

591187 1 Lt

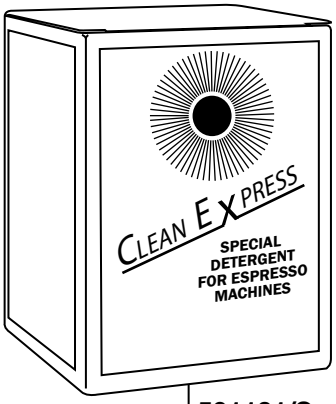

591181/S
15 SACHETS

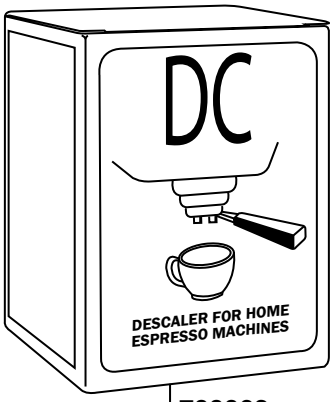

700063
12 SACHETS

PRODOTTI CHIMICI

591188 6 kg
CON CLORO - WITH CHLORINE

591189 12 kg
CON CLORO - WITH CHLORINE

591192
SENZA CLORO - WITHOUT CHLORINE

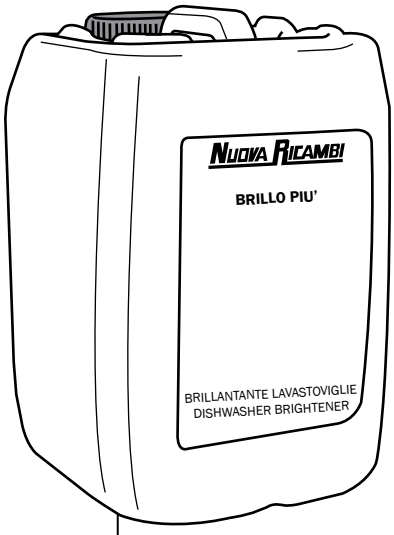

591190 5 kg

591191 10 kg

591193 6 kg

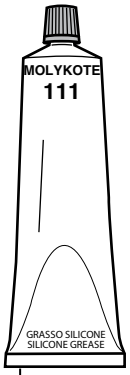

591659 100 gr

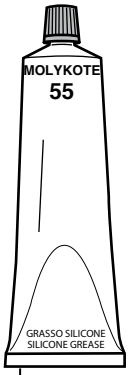

591660 100 gr

591672 25 gr

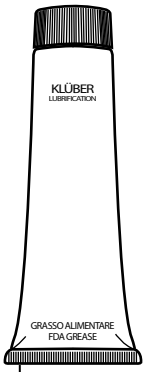

591661 95 gr

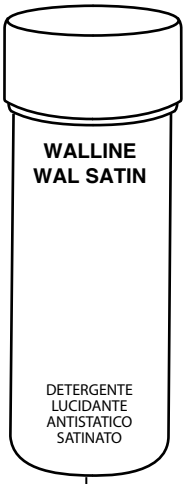

591197

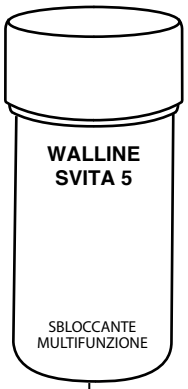

591199

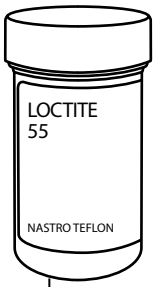

591671

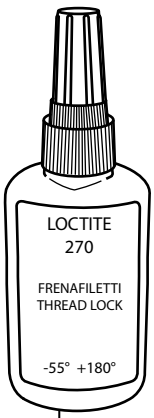

591673 50 ml

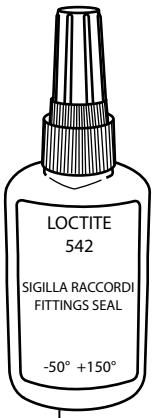

591674 50 ml

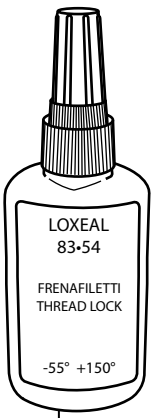

591667 50 ml

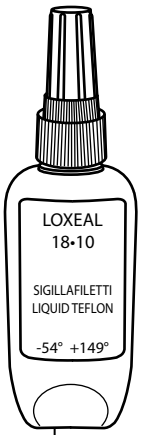

591669 50 ml

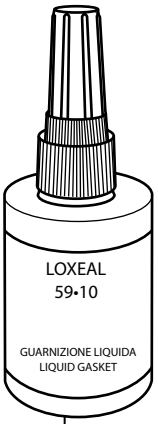

591670 75 ml

PRODOTTI CHIMICI

591194 10 sachets
PULY GRIND CRYSTALS

591205
KIT PULY CAFF NSF

591208 900gr.
PULY CAFF NSF

591209 570gr.
PULY CAFF NSF

591210 370gr.
PULY CAFF NSF

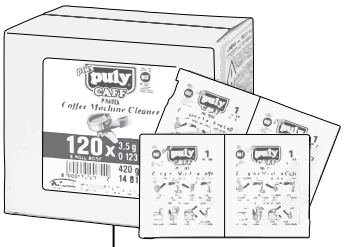

591211 120 sachets
PULY CAFF NSF

591212 510gr.
PULY CAFF GREEN

591213
60 tablets 2,5 gr. each
PULY CAFF NSF

591214
100 tablets 1,35 gr.
PULY CAFF NSF

591215
100 tables 1 gr.
PULY CAFF NSF

591216
70 tables 0,5 gr.
PULY CAFF NSF

591222
120 tables 4 gr.
PULY CAFFBREW NSF

PRODOTTI CHIMICI

591206 1 Lt.
PULY BAR IGIENIC

591217 200 ml.
PULY GRIND HOPPER

591218 1 Lt.
PULY MILK PLUS NSF

591219 4 doses x 25 ml.
PULY MILK PLUS NSF

591221 2 doses x 125 ml.
PULY DESCALER

MOTOR CABLE CONNECTION

620745

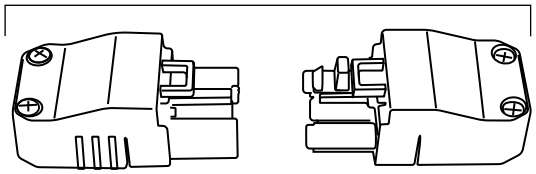

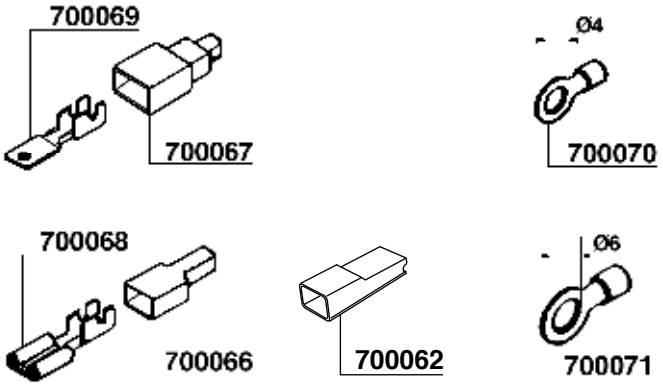

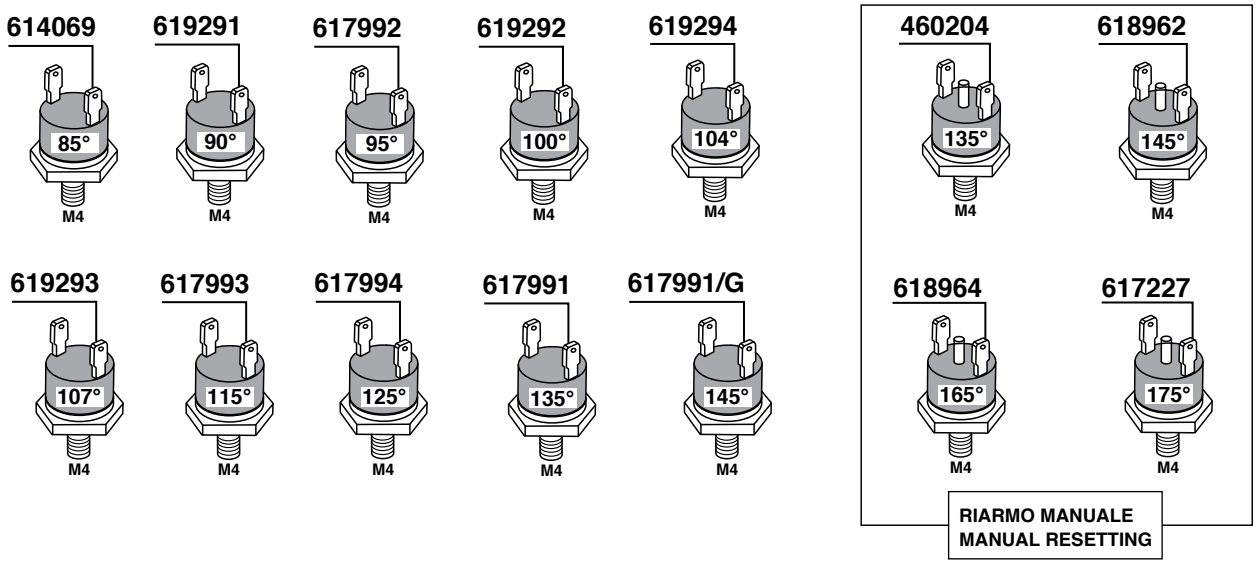

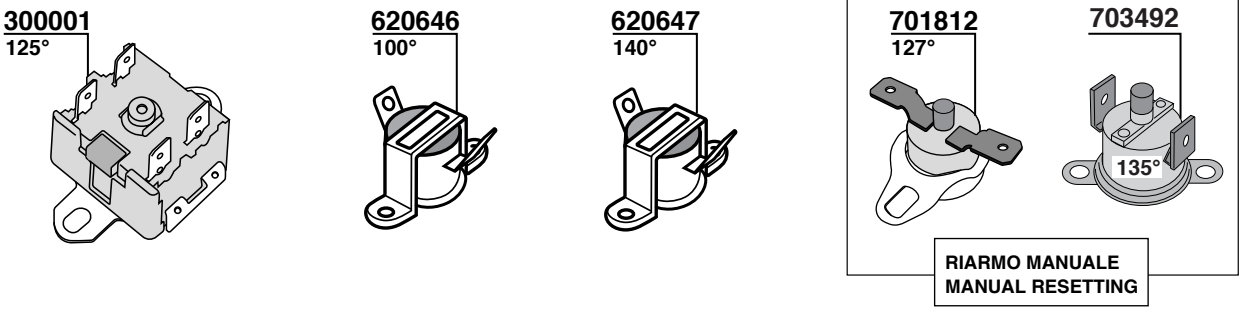

CAVO VETRO SILICONE
GLASS SYLICON HOSE

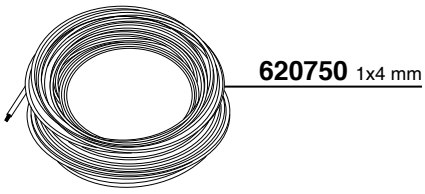

620750 1x4 mm

NASTRO ISOLANTE
ISOTAPE

700065
mt.10x15mm

620721 10 mt - Ø 8 mm
GUAINA ELASTOMERO ROSSA

CAVO UNIPOLARE ISOLATO GOMMA SILICONE
UNIPOLAR SILICON-RUBBER INSULATED CABLE

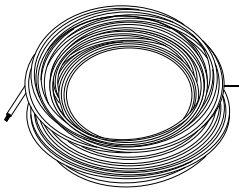

620717 1x2,5 mm MARRONE - BROWN
620718 1x2,5 mm GIALLO/VERDE - YELLOW/GREEN
620719 1x2,5 mm BLU - BLUE
620720 1x2,5 mm GRIGIO - GREY

CAVO FLESSIBILE NEOPRENE
CABLE FLEXIBLE NEOPRENE

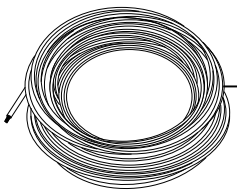

620722 3x2,5 mm
620723 4x2,5 mm
620746 5x2,5 mm

VARI COMPONENTI

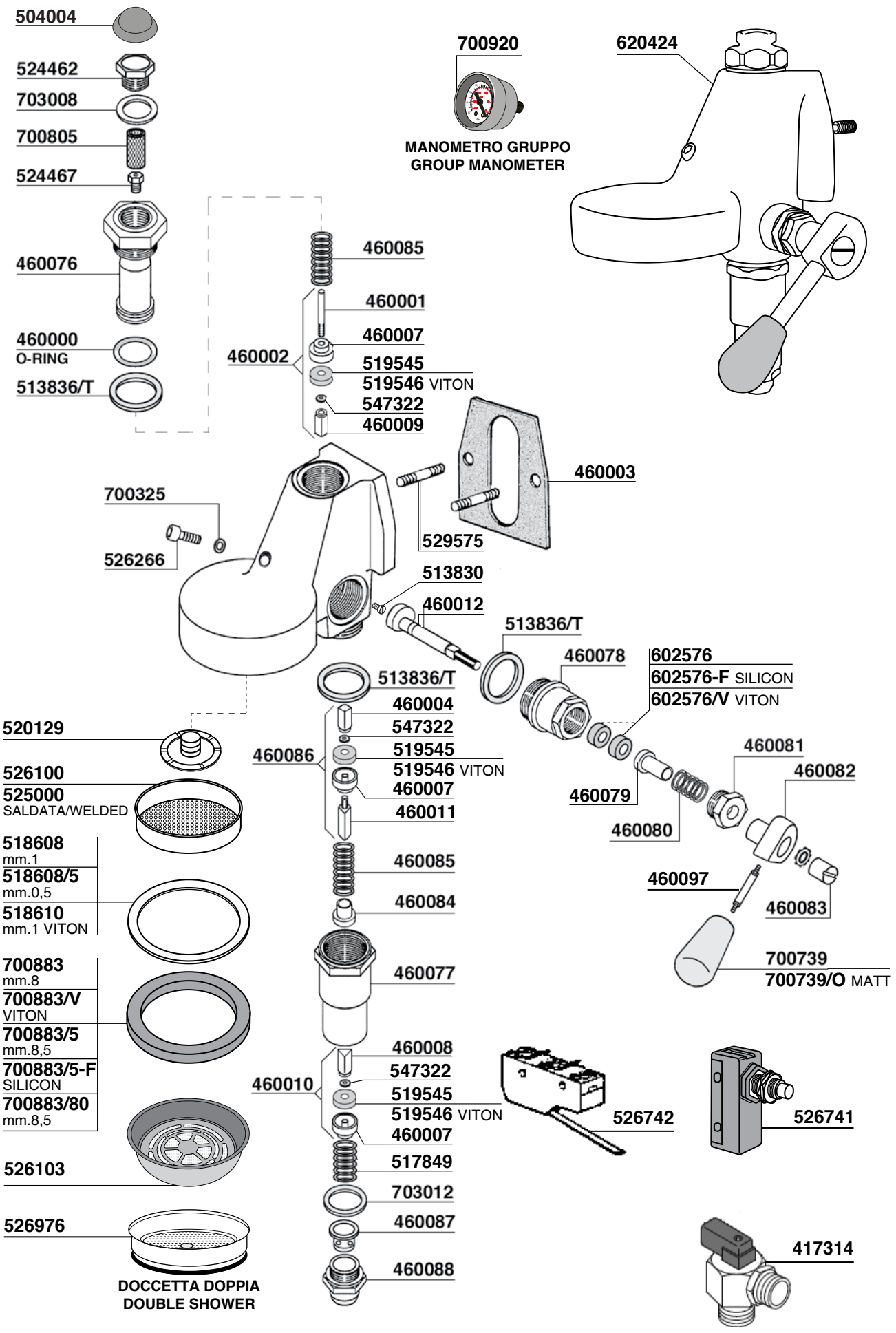

VARI COMPONENTI

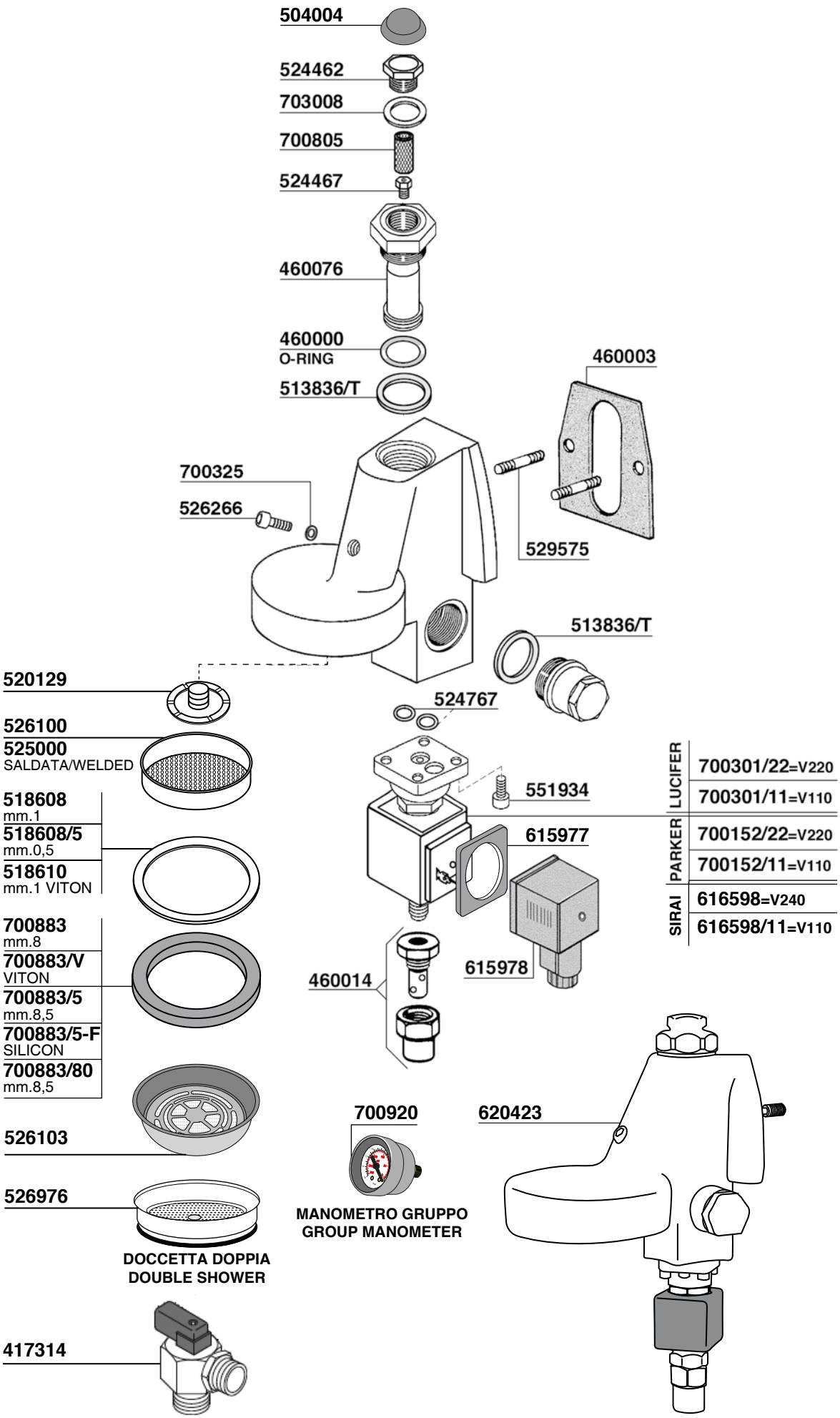

VARI COMPONENTI

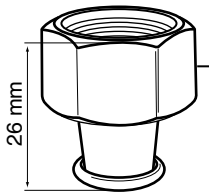

502003 3/8

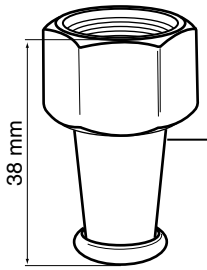

615599 3/8

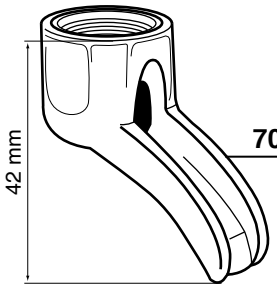

700024 3/8

300202 3/8

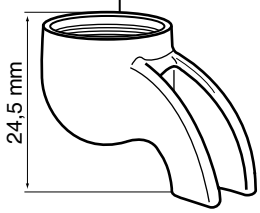

511673 3/8

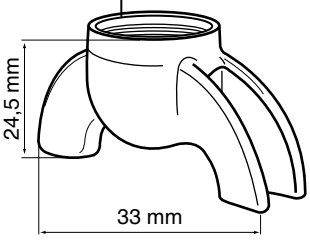

511675 3/8

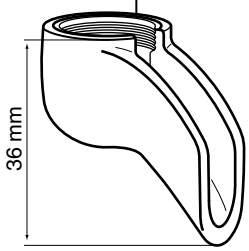

511674 3/8

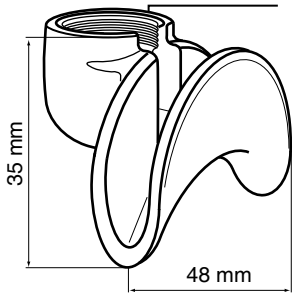

511672 3/8

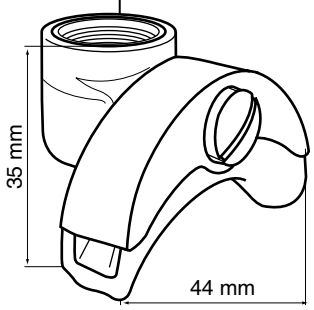

591733 3/8

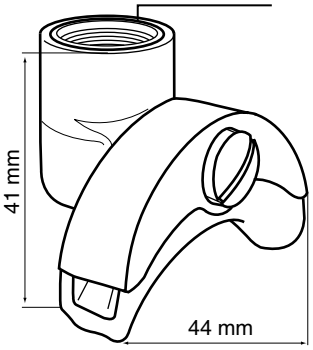

630086 M16
630086/8 3/8

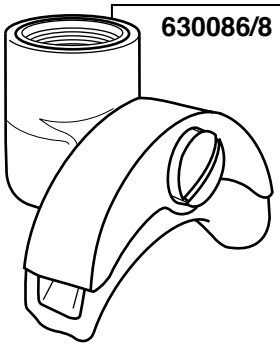

515073

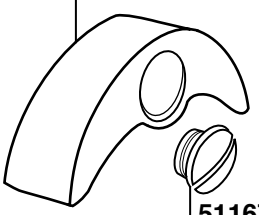

511678

511672/R 3/8

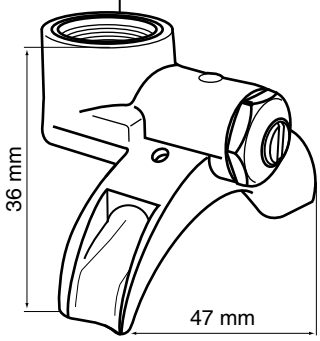

FLUSSO REGOLABILE
ADJUSTABLE FLOW

618522 3/8
3 VIE - 3 WAYS

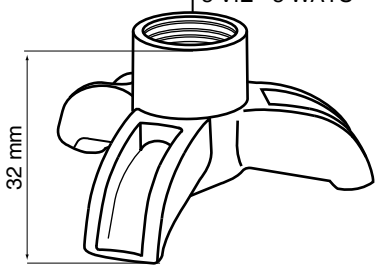

630085 M16
630085/8 3/8

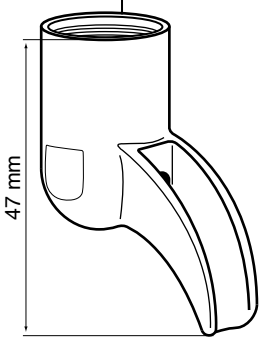

511676 3/8
INOX

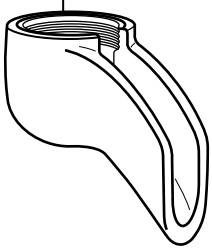

511677 3/8
INOX

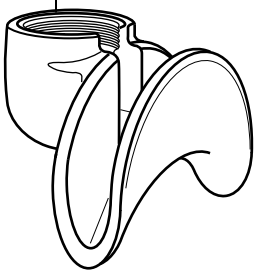

630087 M16
630087/8 3/8

515074

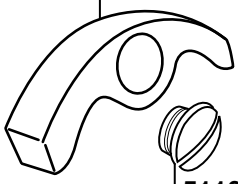

511678

700789 3/8

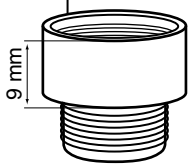

VARI COMPONENTI

Tav.31

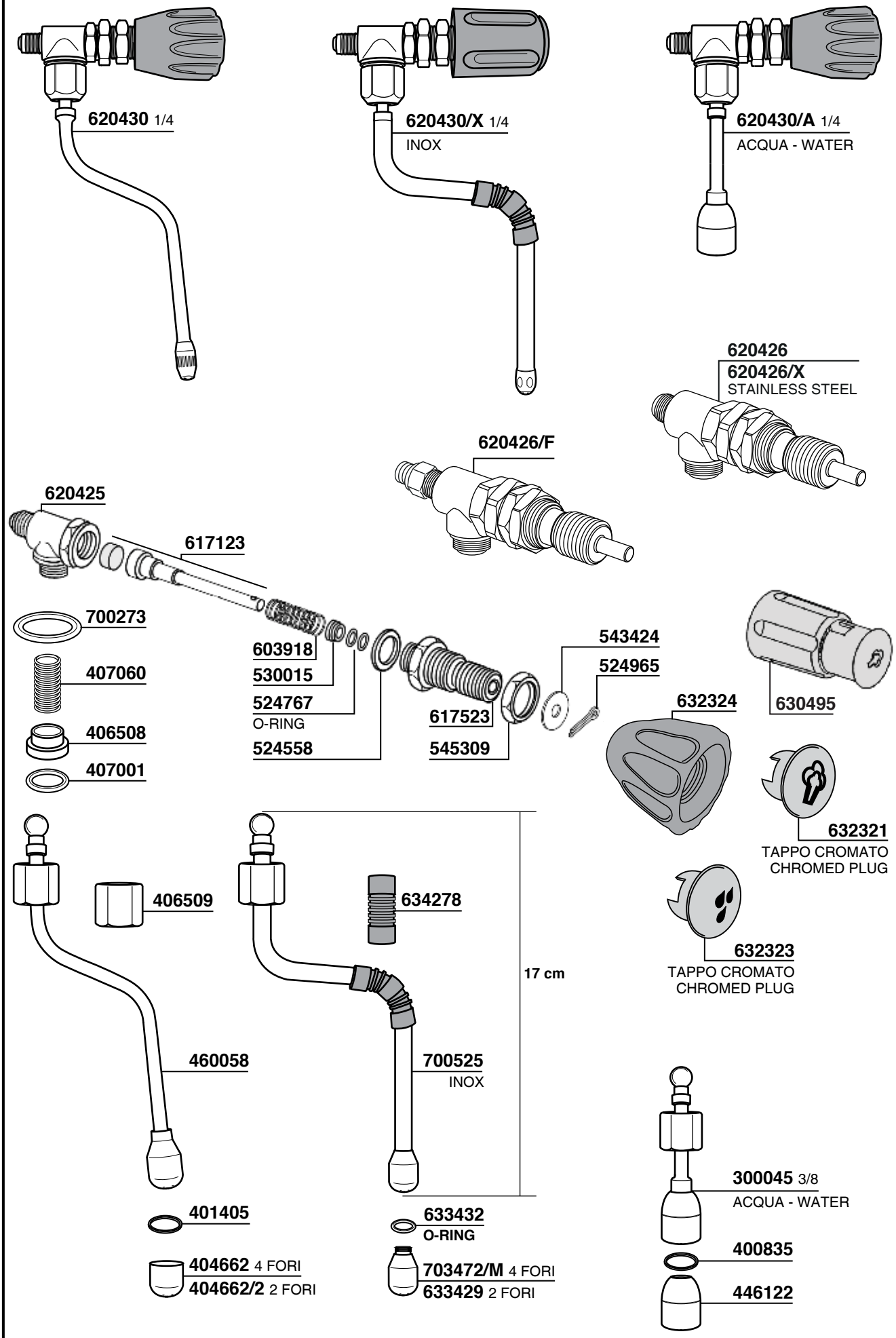

VARI COMPONENTI

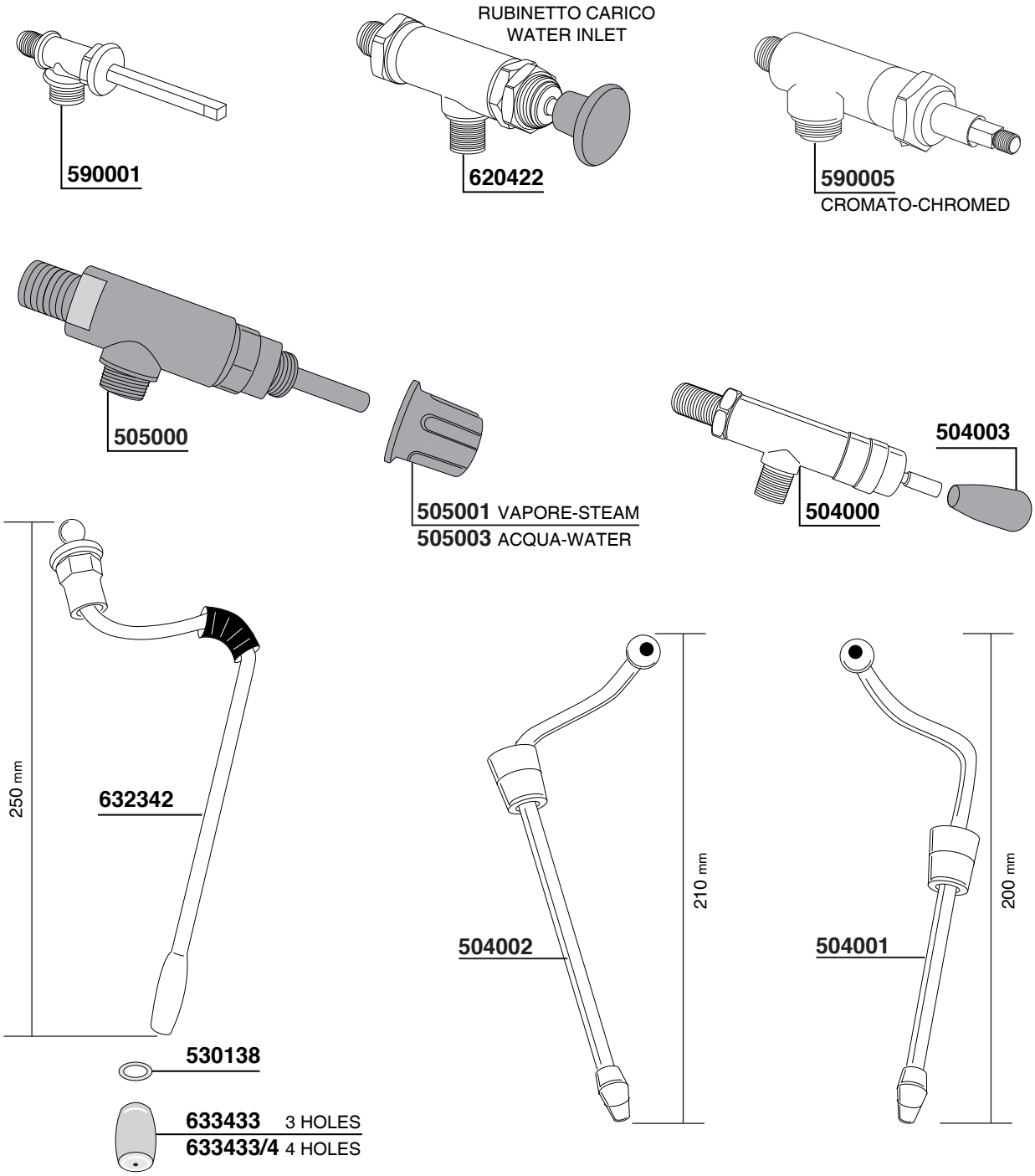

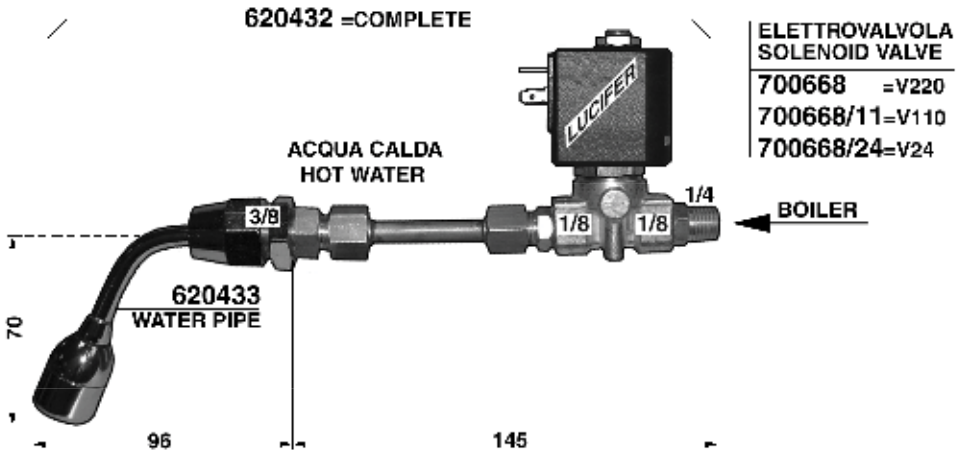

VARI COMPONENTI

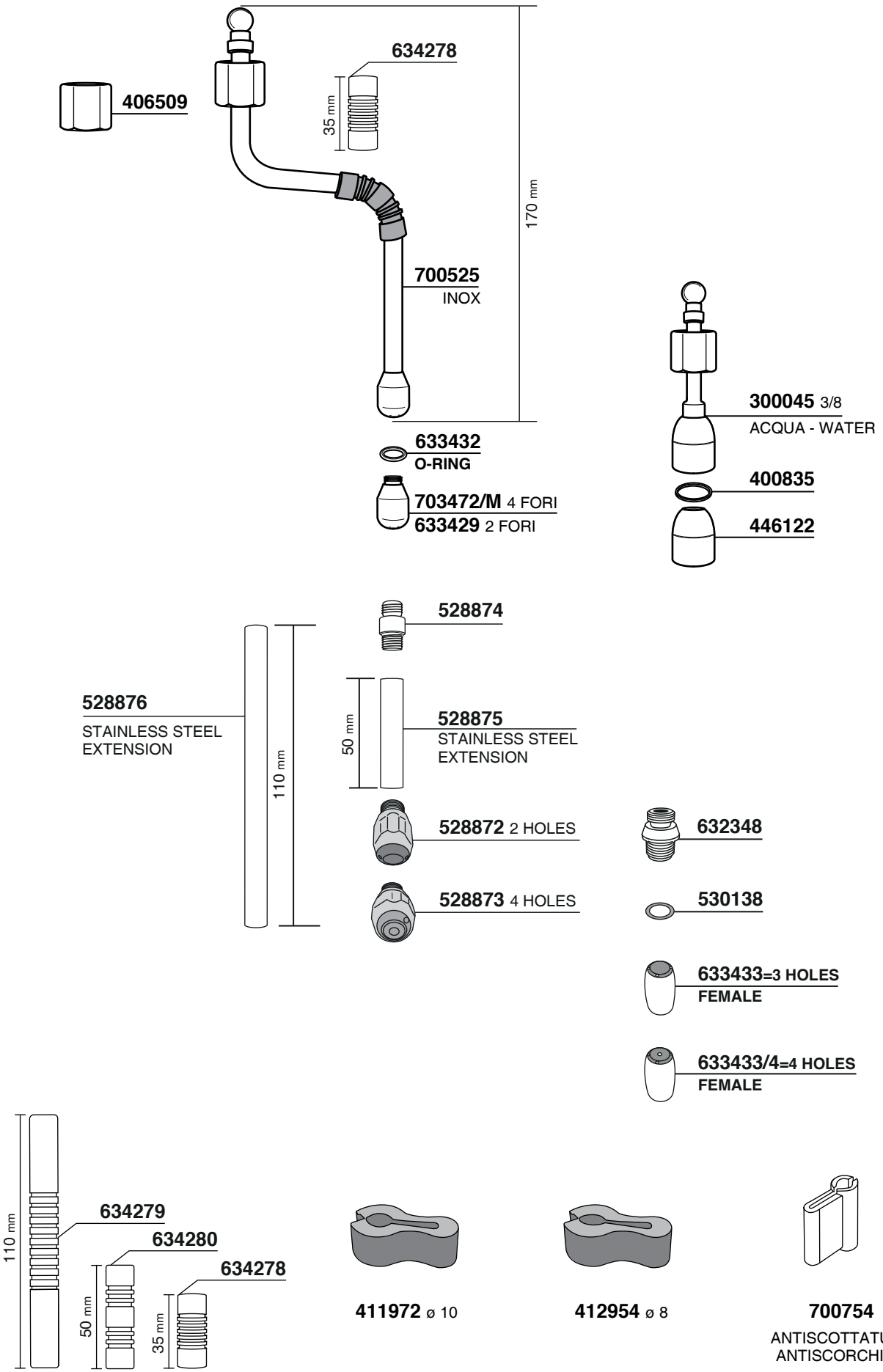

VARI COMPONENTI

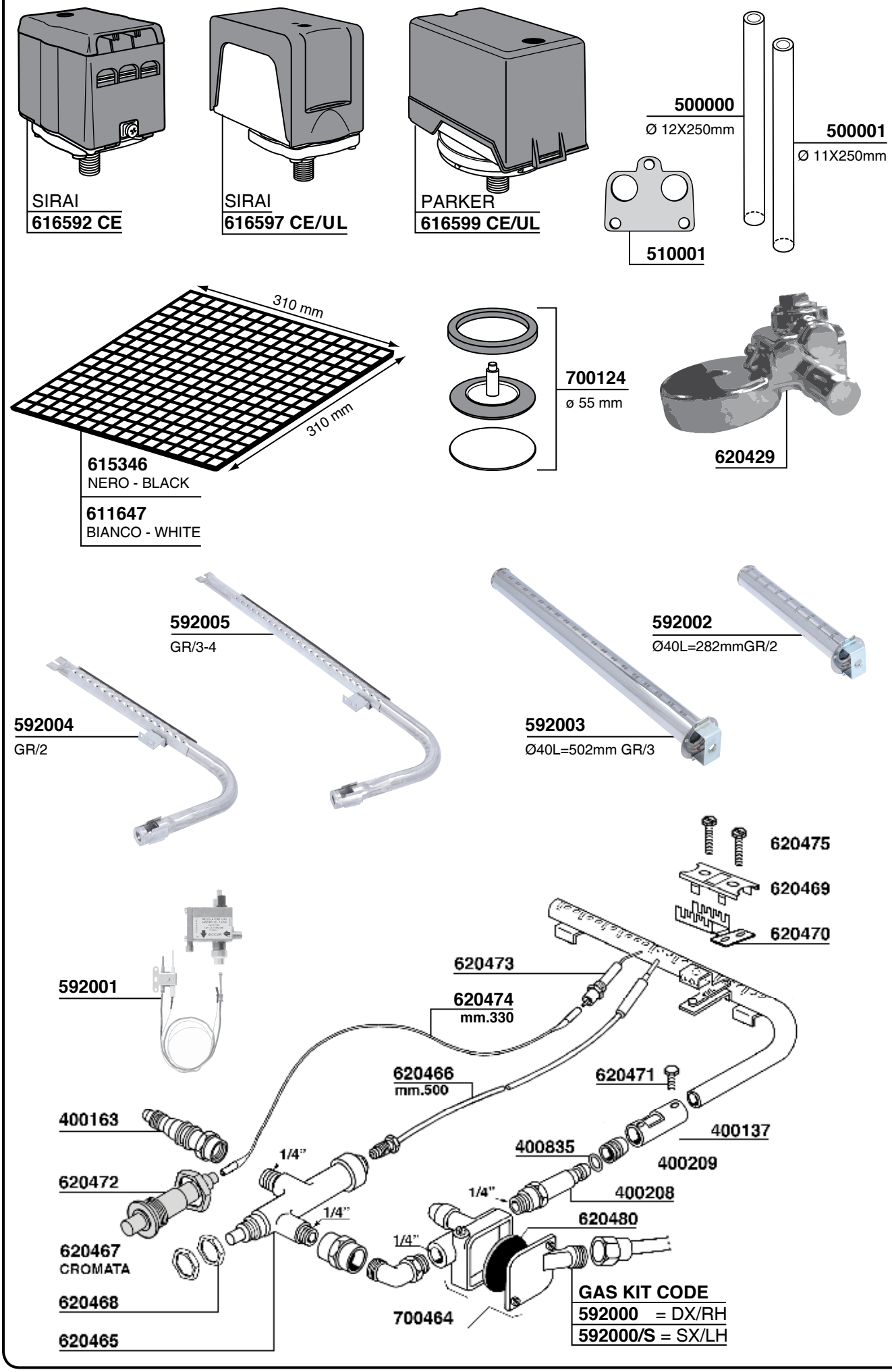

VARI COMPONENTI

Tav. 35

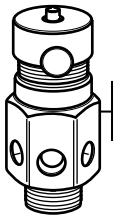

615624/A
CE certificato certified
3/8
524555

615625/A
CE certificato certified
3/8
524555

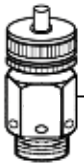

615626/A
CE certificato certified
1/2
524552/R

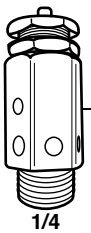

615623/A
CE certificato certified
1/4
524554

700217
3/8
524555

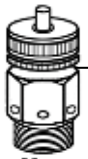

700857
M22
700898

618968
1/4
524554

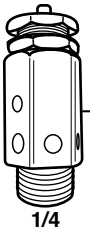

615623
1/4
524554

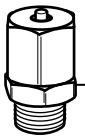

700750/V
1/4
524554

700268
M19
524556

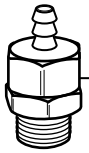

618969
ø 8
1/4
524554

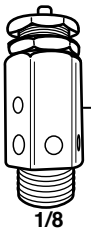

615631/A
CE certificato certified
1/8
700231

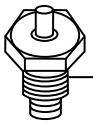

618970
1/4

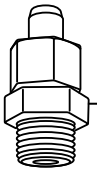

581788
1/4

700375
3/8
524555

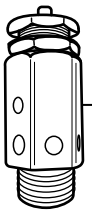

615631
1/8
700231

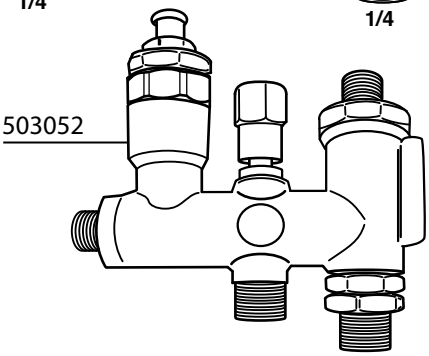

503052

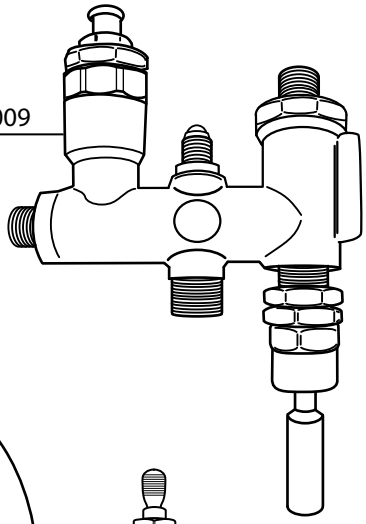

503009

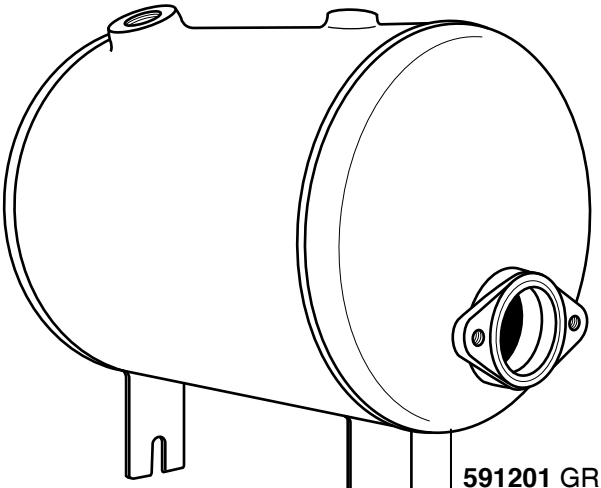

BOILER RAME E61
E61 COPPER BOILER

591201 GR1
591202 GR2
591203 GR3

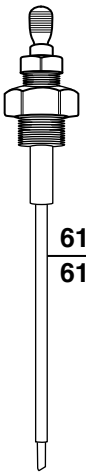

612601 120 mm
612601/L 140 mm

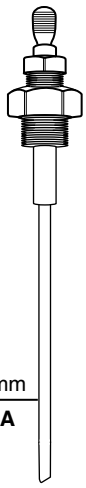

503005 165 mm
SENZA GUAINA

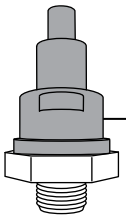

618967
524554

VARI COMPONENTI

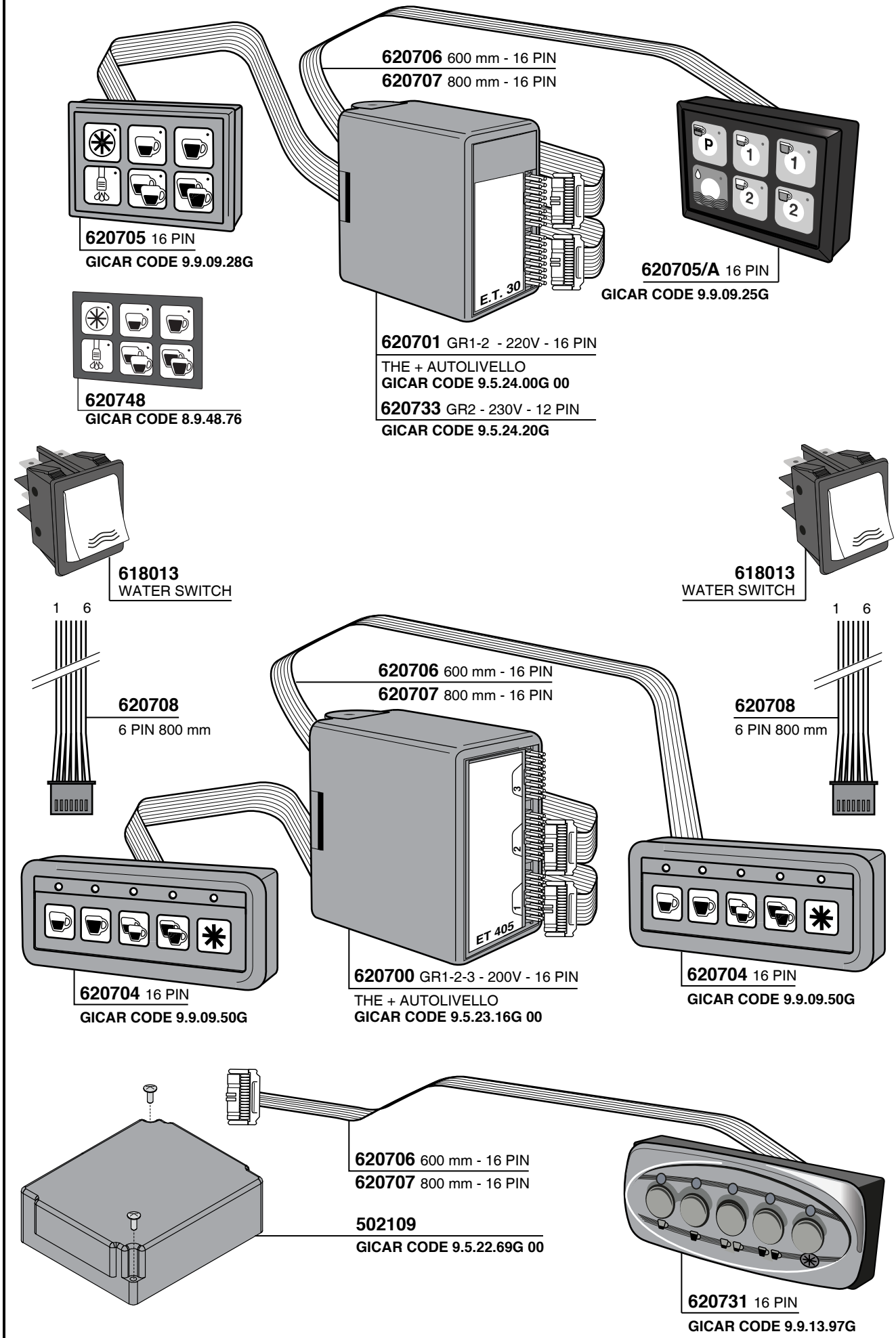

VARI COMPONENTI

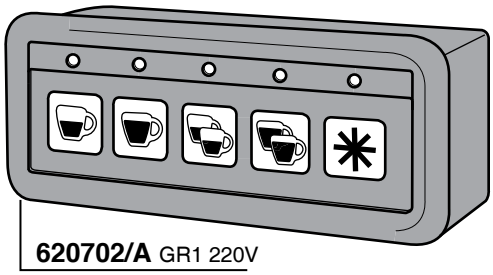

620702/A GR1 220V

PULSANTIERA+CENTRALINA+AUTOLIVELLO
TOUCH PAD+ELECTRONIC BOX+AUTOFILL
GICAR CODE 9.5.28.14G 00

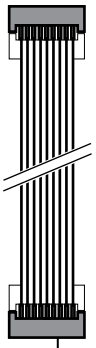

620714
8 PIN 800 mm

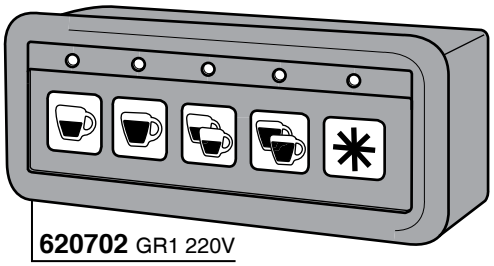

620702 GR1 220V

PULSANTIERA+CENTRALINA+THE
TOUCH PAD+ELECTRONIC BOX+TEA
GICAR CODE 9.5.28.34G 00

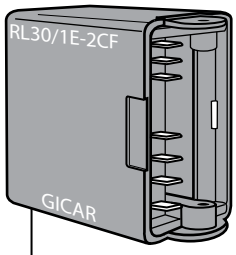

AUTOLIVELLO - AUTOFILL

700737 220V
GICAR CODE 9.1.40.71G

700737/11 110V
GICAR CODE 9.1.40.70G

620739
10 PIN 1100 mm

620747
GICAR CODE 6.0.36.86

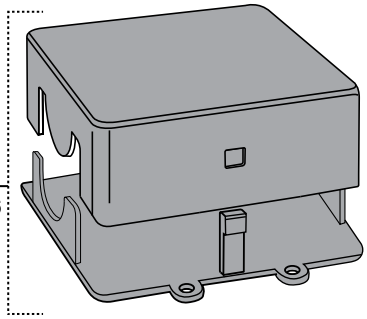

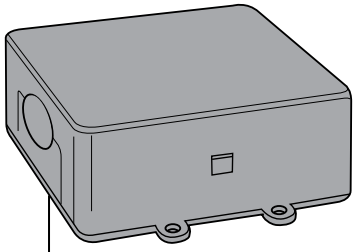

620732
3D5 LC 3GRCT 3TEA 230V
GICAR CODE 9.5.22.09G 01

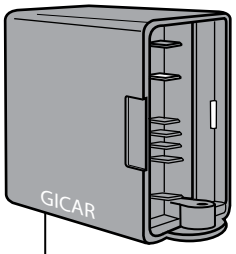

703382
GICAR CODE 9.1.41.22G02

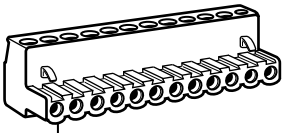

620709/4 4 PIN
620709/6 6 PIN
410453 7 PIN
620709/8 8 PIN
620709/10 10 PIN
620709 12 PIN
620709/13 13 PIN

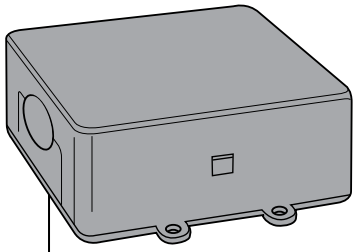

504005
GICAR CODE 9.5.22.50G 00

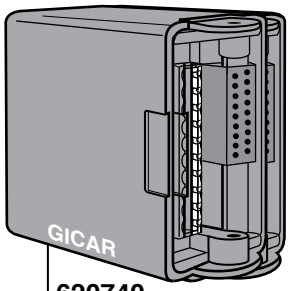

620740
GICAR CODE 9.5.17.80G 06

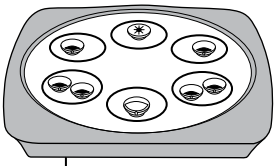

620743
GICAR CODE 9.9.14.68G

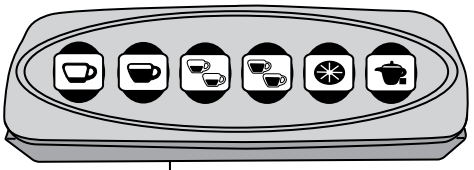

620734
GICAR CODE 9.9.07.41G

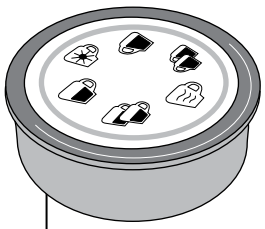

620741
GICAR CODE 9.9.13.26G

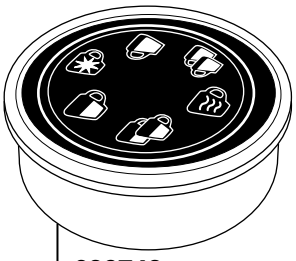

620742
GICAR CODE 9.9.13.53G

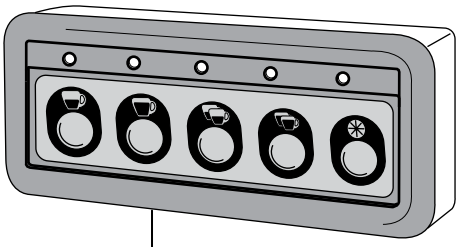

620736 16 PIN
GICAR CODE 9.9.08.83G

615978/T

615979

617903/G

530143

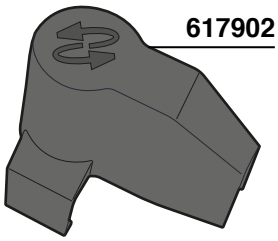
617902

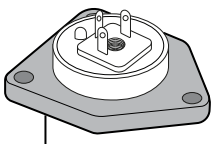
620405/C

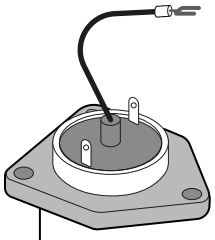
700868/OTC

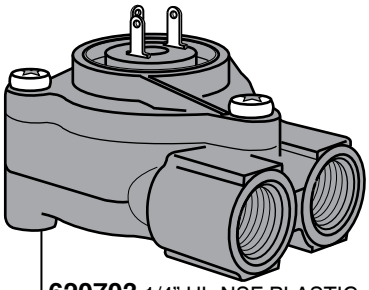
620703 1/4" UL-NSF PLASTIC

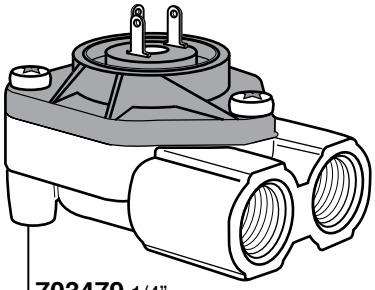
703479 1/4"

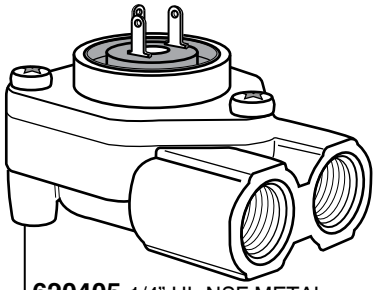
620405 1/4" UL-NSF METAL
620404 1/8" UL-NSF METAL

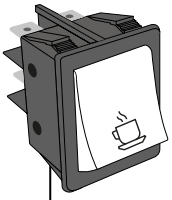
618011
BREW SWITCH

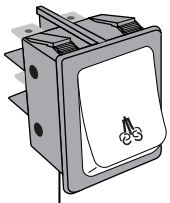
300040
STEAM SWITCH

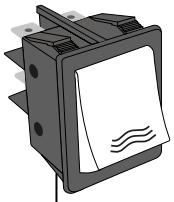
618013
WATER SWITCH

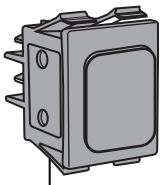
300042
RED LIGHT

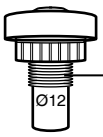

VERDE
GREEN
402629

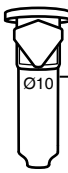

ARANCIO
ORANGE
402627
COVER

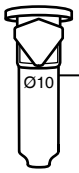

VERDE
GREEN
402628
COVER

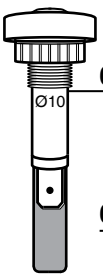

VERDE
GREEN
617733 220V
617734 220V

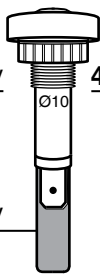

ROSSO
RED
417583 230V

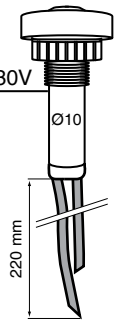

VERDE
GREEN

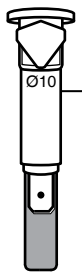

VERDE
GREEN
617732 220V
617732/11 110V
617730 220V
617730/11 110V

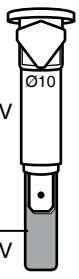

ROSSO
RED

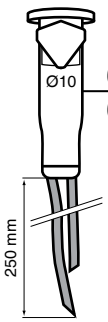

VERDE
GREEN
615512 220V
615512/11 110V
615511/22 220V
615511/11 110V

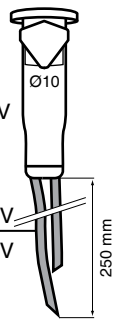

ROSSO
RED

ELETTROVALVOLE

ELETTROVALVOLE 3 VIE TENUTA RUBINO - 3 WAYS SOLENOID VALVES RUBY SEAL

PARKER 0-10bar
700152/22 V220/50/60
700152/11 V110/60
100246 V24 DC

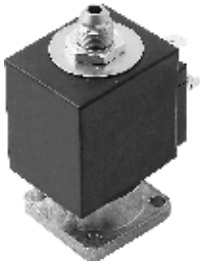

SIRAI 0-10 bar
616598 V208/240/50/60
616598/11 V110/60

FLAT

PARKER 0-10bar
700153/22 V220/50/60
700153/11 V110/60
700270 V24/50/60

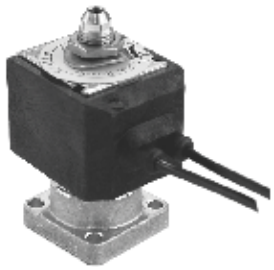

PARKER 0-10 bar
576288/22 V220/50/60
576288/11 V110/60

LUCIFER 0-10 bar
700301/22 V220/50/60
700301/11 V110/60
700301/24 V24/50/60
619276 V24 DC

O D E 0-15 bar
300304 V220/50/60
300304/11 V110/60
300304/24 V24/50/60

O D E 0-15 bar
300065 V220/50/60
300065/11 V110/60

ACCIAIO - STEEL

PARKER 0-10 bar
700174 V220/50/60
700174/11 V110/60
700174/24 V24/50/60

LUCIFER 0-14 bar
700175 V220/50/60
700175/11 V110/60
700175/24 V24/50/60

SIRAI 0-14 bar
616581 V240/60

SIRAI 0-20 bar
616582 V230/50/60

TENUTA VITON - VALVES VITON SEAL

PARKER 0-10 bar
632018/22 V220/50/60
632018/11 V110/60
632018/24 V24/50/60

OLAB 0-14 bar
401984 V220/50/60
401984/11 V110/60

SIRAI 0-20 bar
616593 V230/50/60

SIRAI 0-30 bar
616594 V220/50

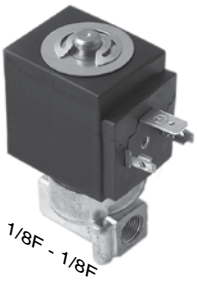

SIRAI 0-20 bar
616595 V220/50

ELETTROVALVOLE

2 WAYS SOLENOID VALVES VITON SEAL

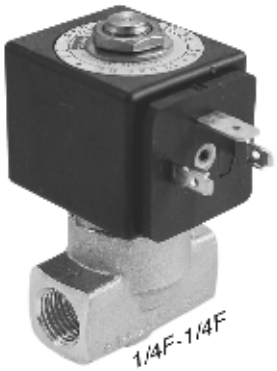

PARKER Ø 2,5
632017/22 V220/50/60
632017/11 V110/60
632017/24 V24/50/60

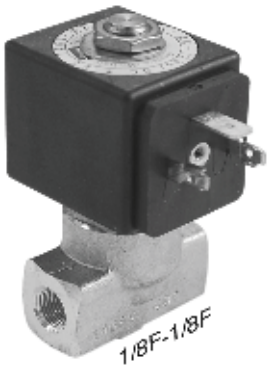

PARKER Ø 2,5
700869/22 V220/50/60
700869/11 V110/60
700869/24 V24/50/60

PARKER Ø 2,5
634294/22 V220/50/60
634294/11 V110/60
634294/24 V24/50/60

PARKER
601604 V220/50/60

LUCIFER Ø 2,5
700668 V220/50/60
700668/11 V110/60
700668/24 V24/50/60

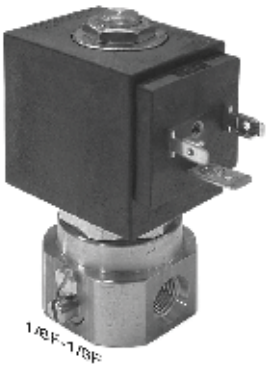

ADJUSTABLE
O D E Ø 0÷2,5
560066 V220/50/60
560066/11 V110/60

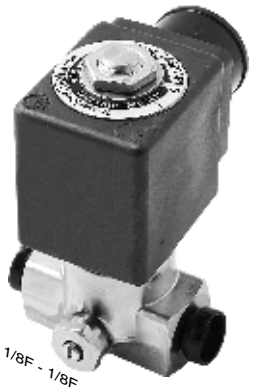

ADJUSTABLE
PARKER Ø 1,5
616580 V220/240

O D E
300235 V220/50/60
300235/11 V110/60

LUCIFER Ø 2,5
700670

PARKER Ø 2,5
700872

PARKER Ø 2,5
700873

PARKER Ø 2,5
632019

OLAB Ø 2
401893 V220/50
401894 V110/60

M & M Ø 1,5
700253/22 V220/50/60
700253/11 V110/60
700253/24 V24/50/60

M & M Ø 1,5
619139/22 V220/50/60
619139/11 V110/60

ELETTROVALVOLE

PARTI MECCANICHE 3 VIE TENUTA RUBINO - 3 WAYS SOLENOID VALVES BODY RUBY SEAL

PARKER S.S. 0-14bar
700173

PARKER S.S. 0-12bar
632016

PARKER 0-10bar
700177

FLAT

PARKER 0-10bar
700158

LUCIFER 0-10bar
700176

ODE 0-15bar
300305

PARKER

700179/22 V220/50/60
700179/11 V110/60
700156 V24/50/60
591753 V24 DC

O D E

300015 V220/50/60
300015/11 V110/60
300015/24 V24/50/60

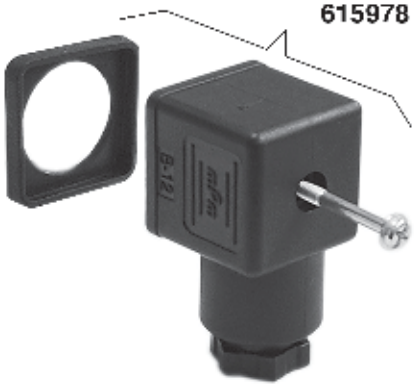

LUCIFER

700181/22 V220/50/60
700181/11 V110/60
700181/24 V24/50/60

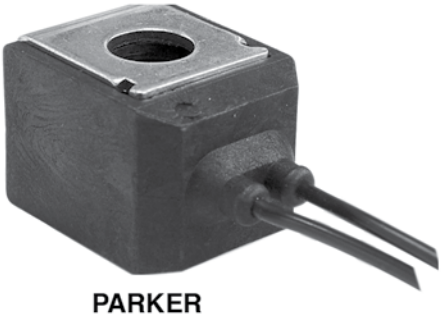

PARKER

700189/22 V220/50/60
700189/11 V110/60

OLAB

401895 V220/50/60
401896 V110/60

M & M

700648/22 V220/50/60
700648/11 V110/60
700648/24 V24/50/60

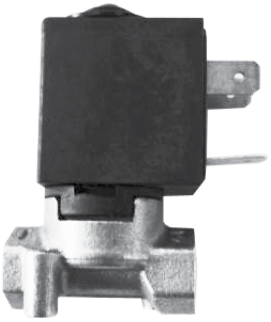

601602 V230/50

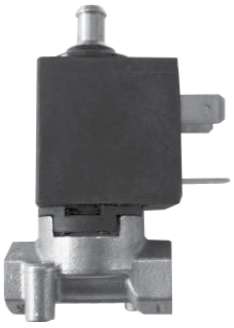

601603 V220/50

MACINACAFFE'

ANFIM MODEL: HAUS

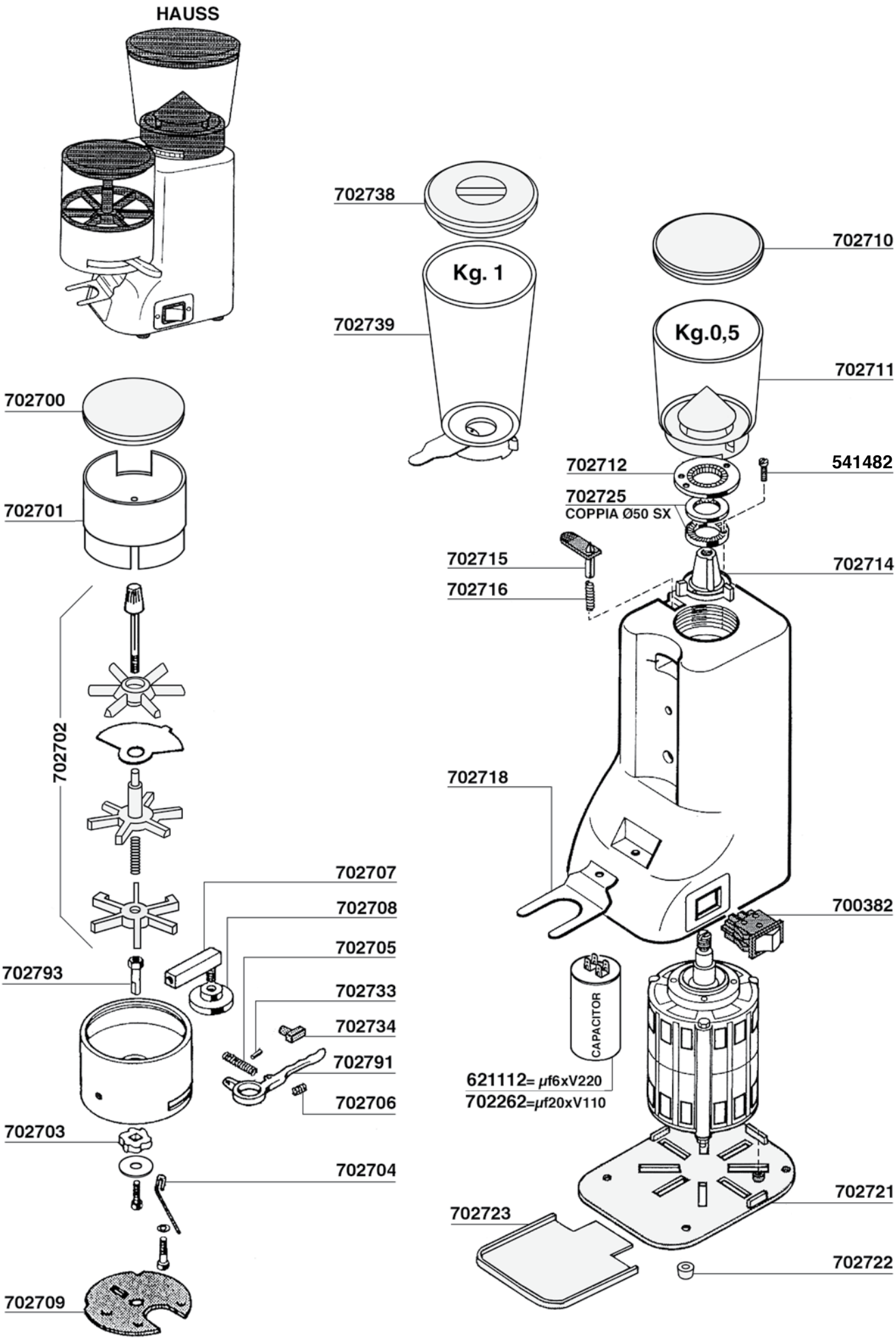

MACINACAFFE'

ANFIM MODEL: HAUS SELF

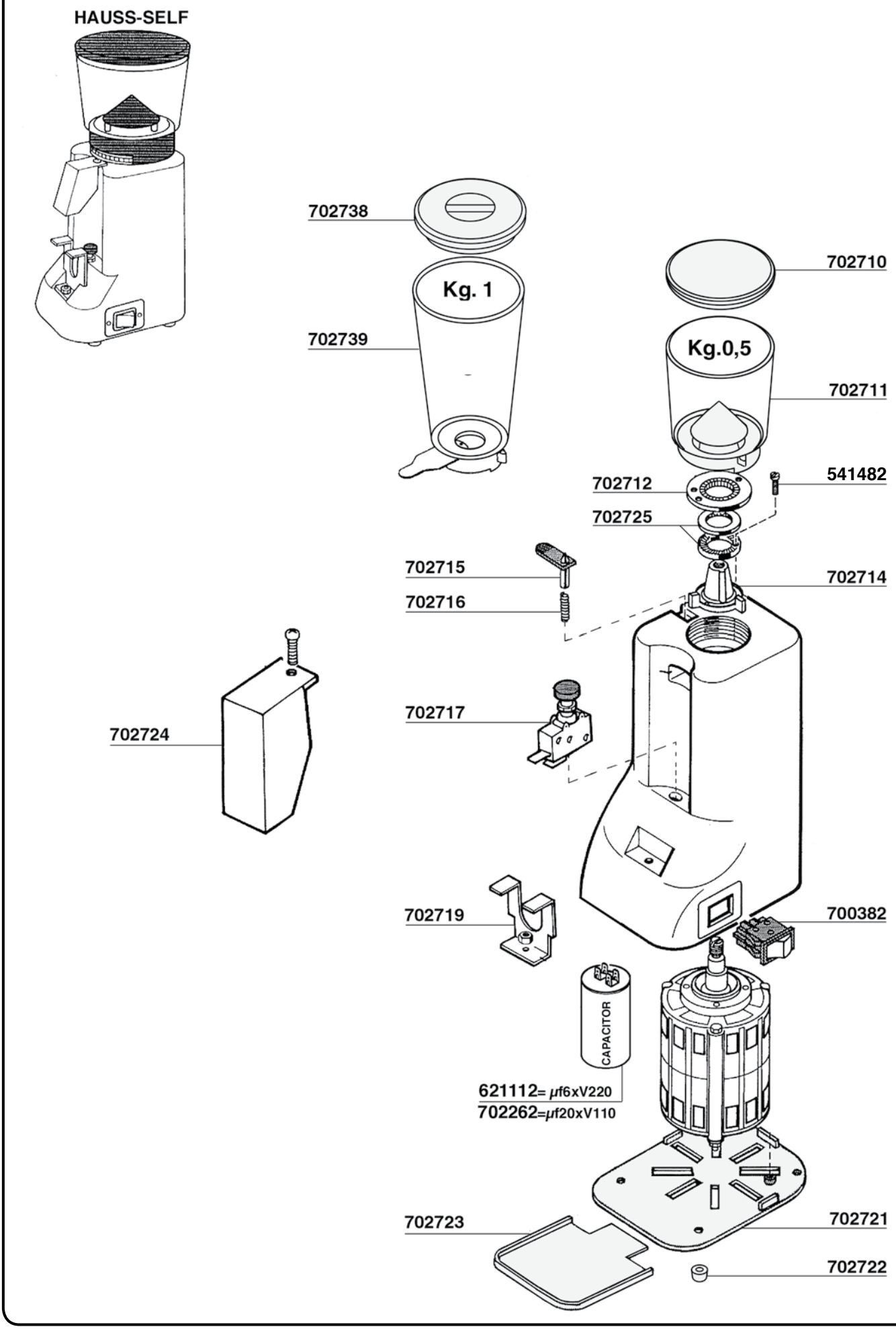

MACINACAFFE'

ANFIM MODEL: BEST

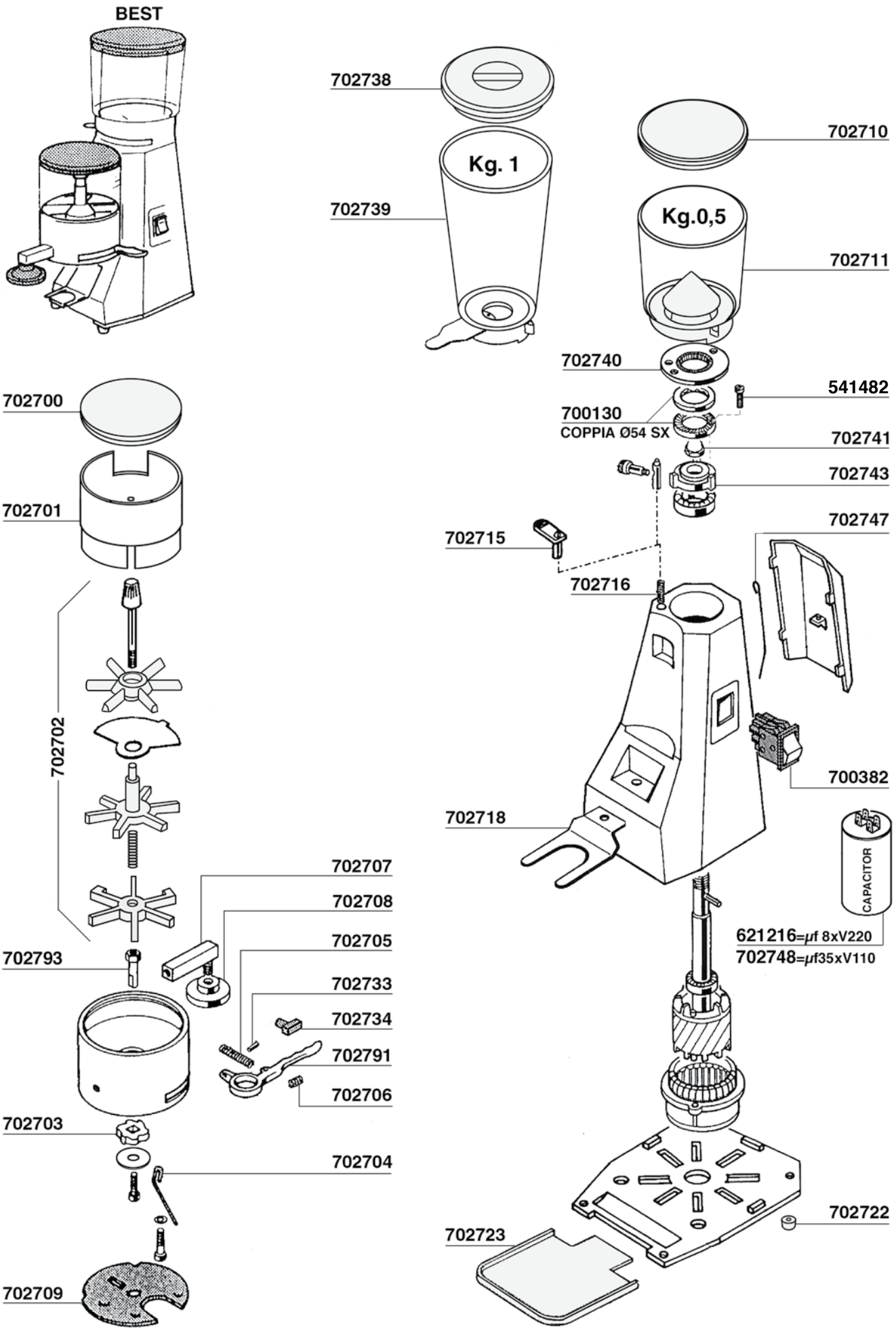

MACINACAFFE'

Tav. 04

ANFIM MODEL: SUPER BEST

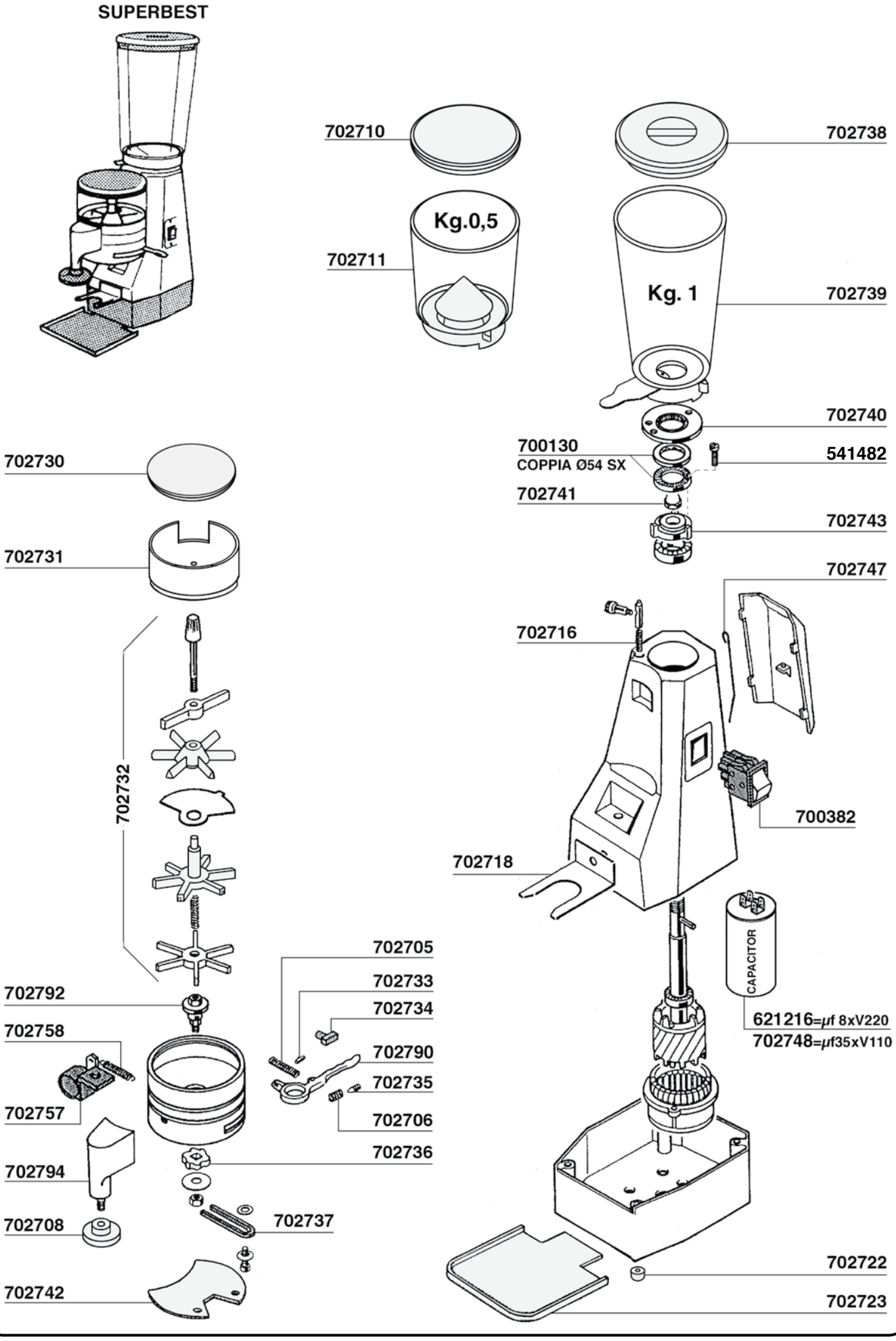

NUOVA RICAMBI MACINACAFFE' Tav. 05

ANFIM MODEL: LUSSO

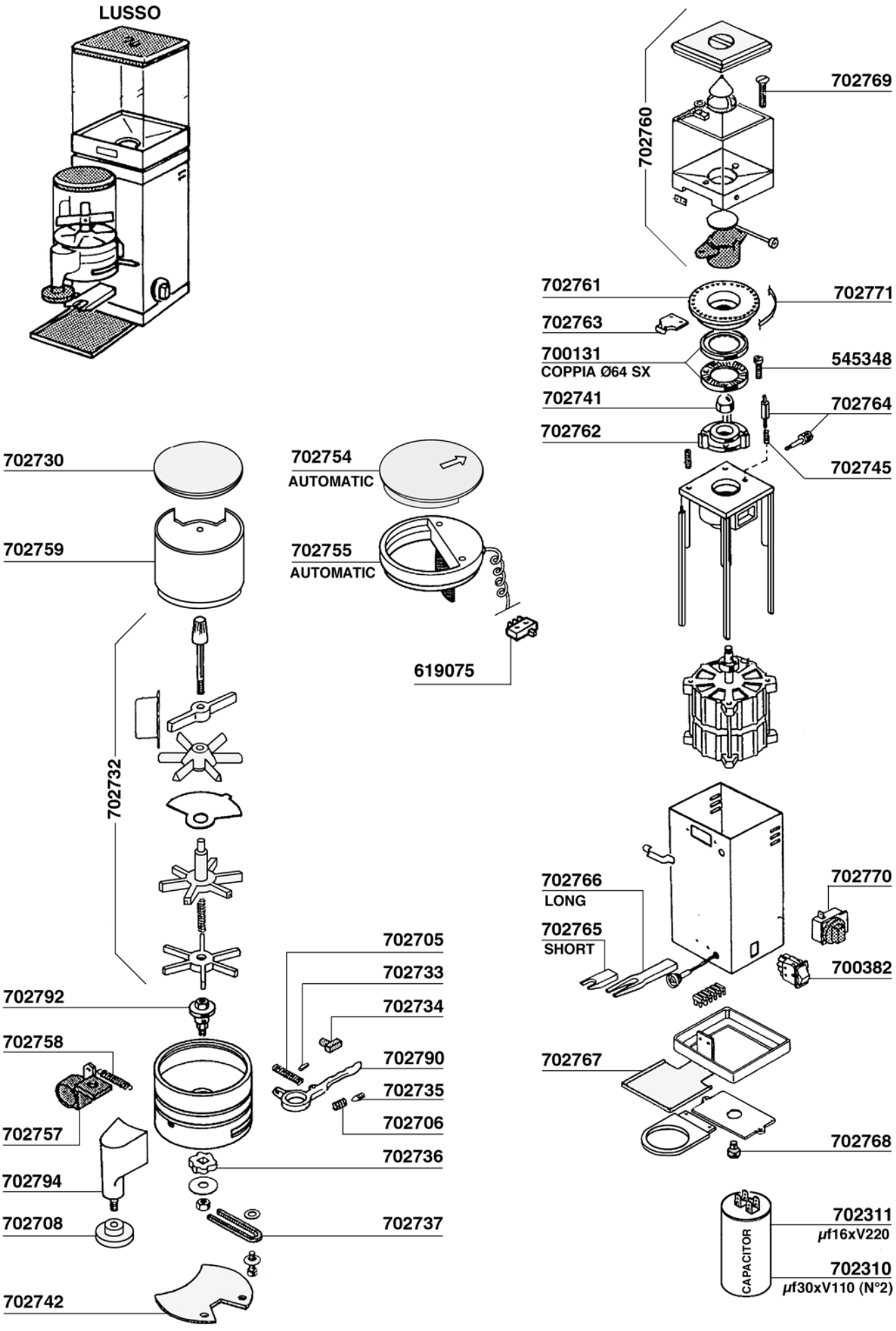

MACINACAFFE'

ANFIM MODEL: SUPER LUSSO

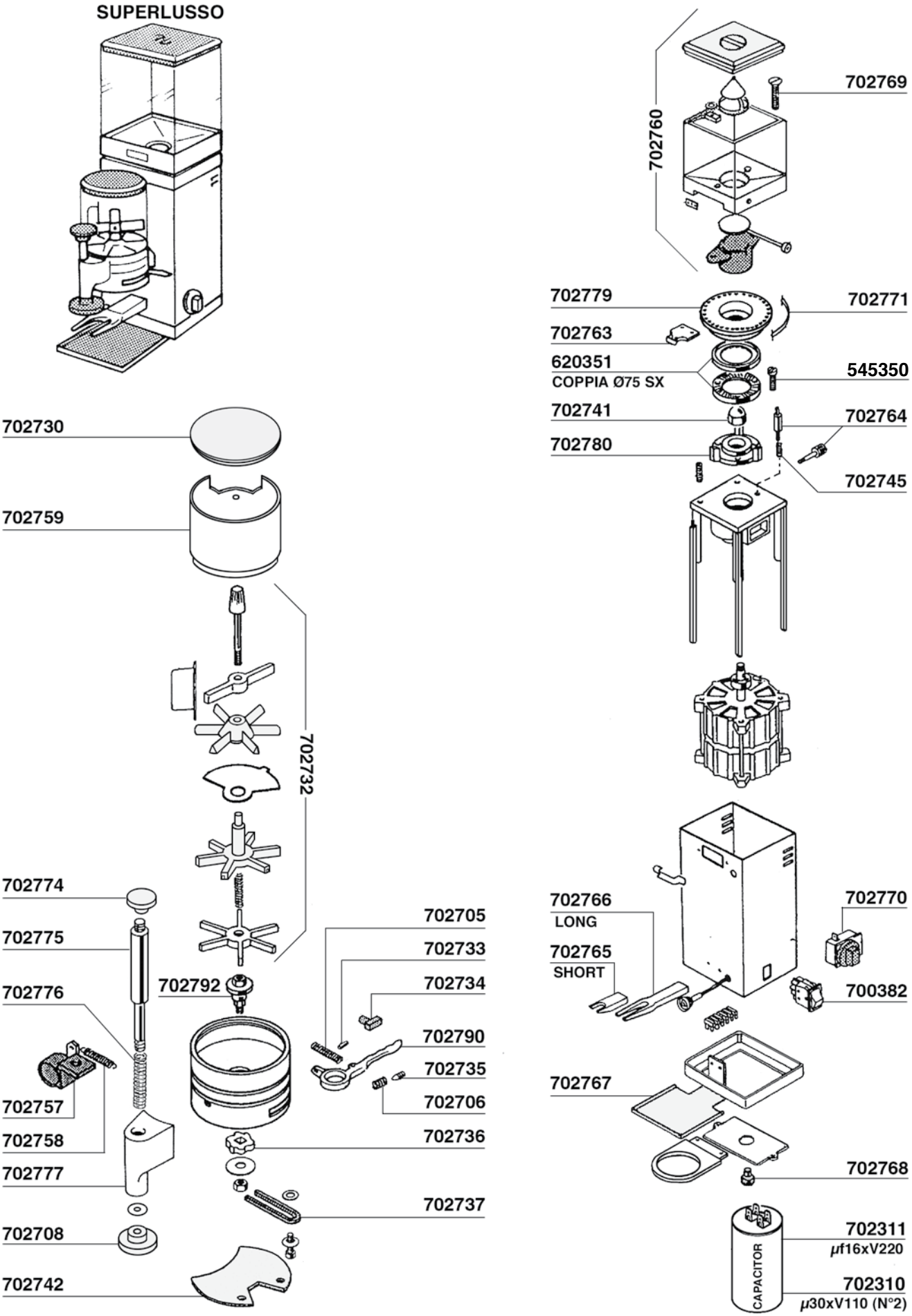

MACINACAFFE

ANFIM MODEL: CAIMANO

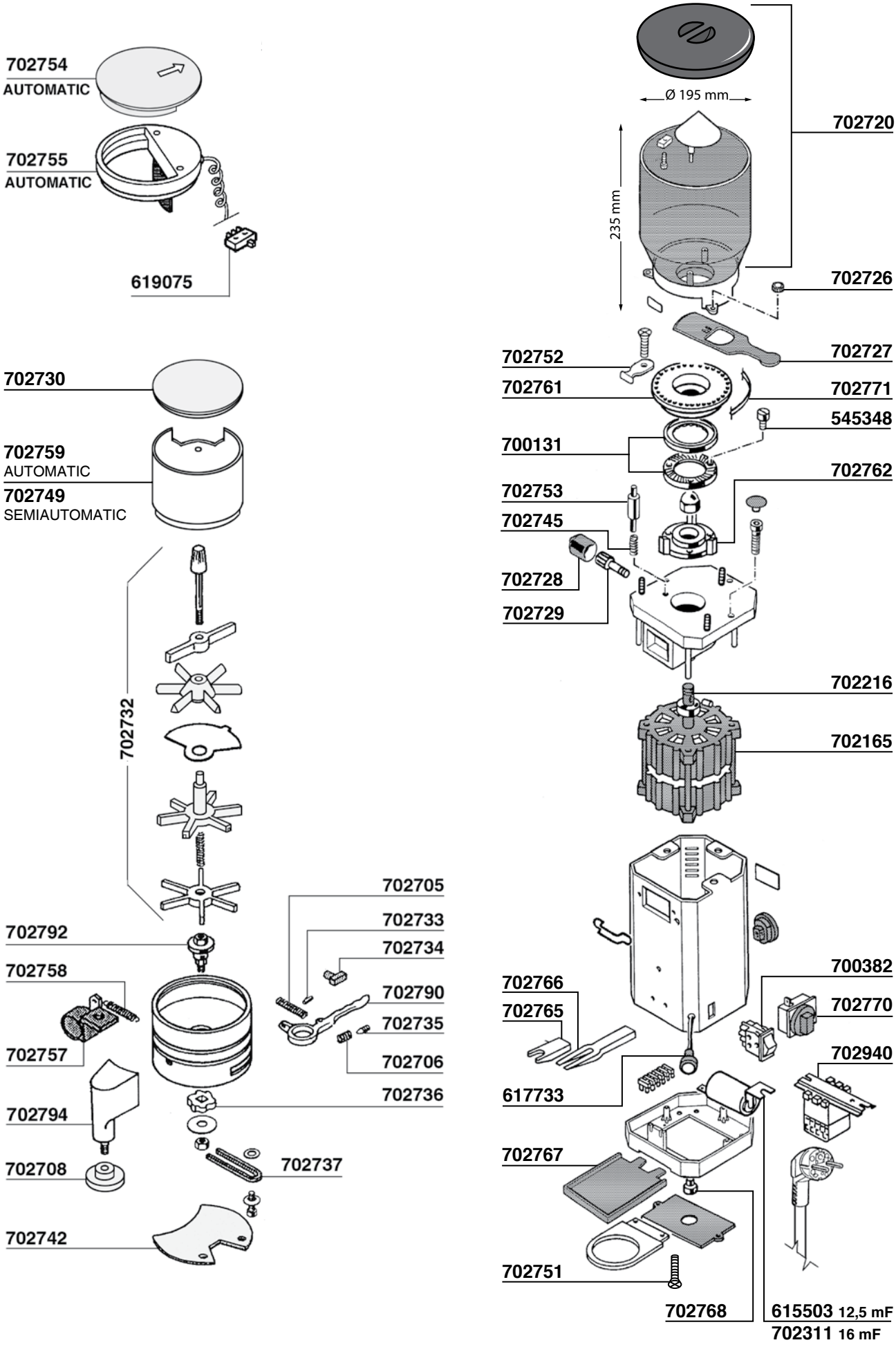

MACINACAFFE

ANFIM MODEL: SUPER CAIMANO

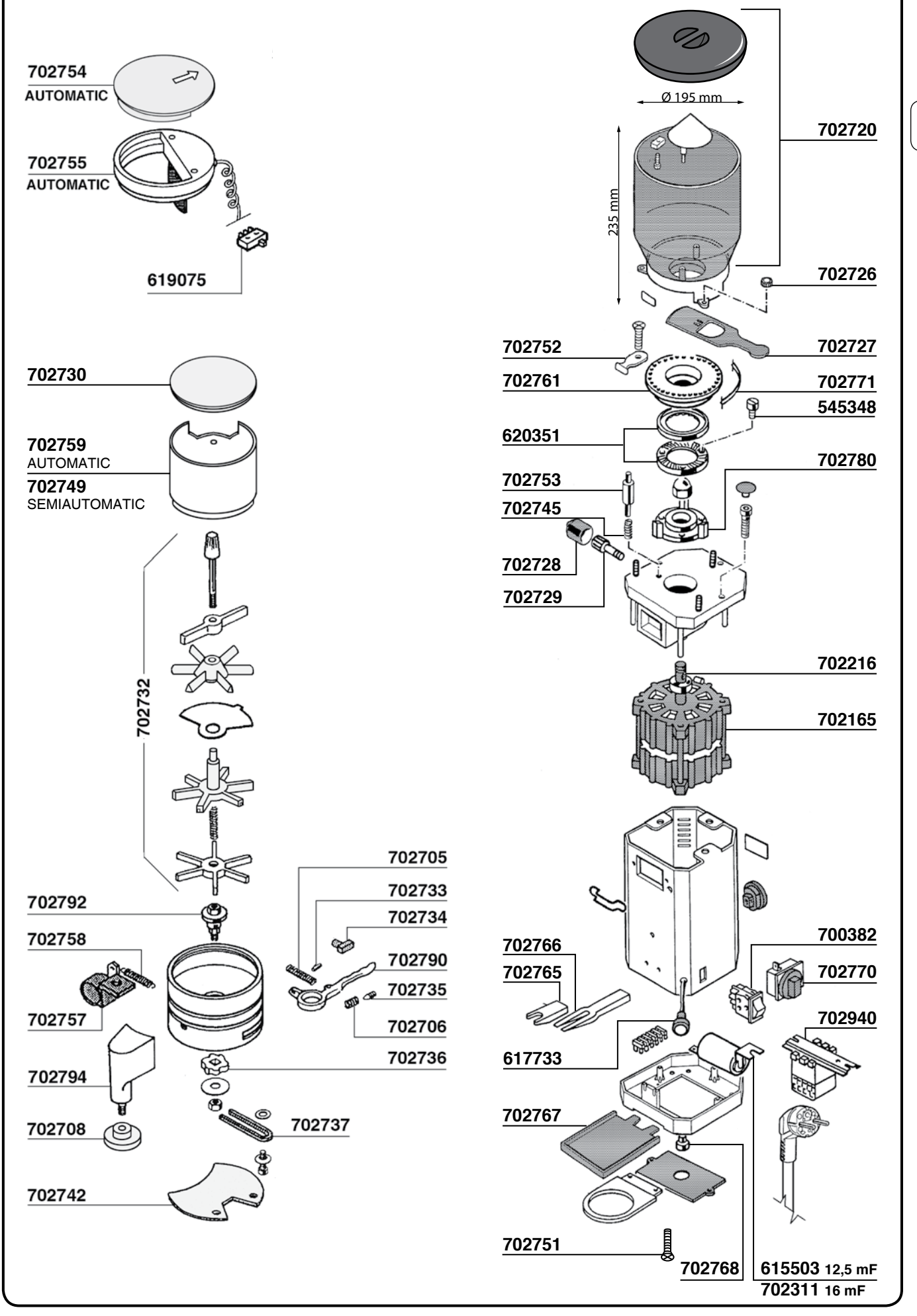

MACINACAFFE'

BNZ: MD64 - MD74

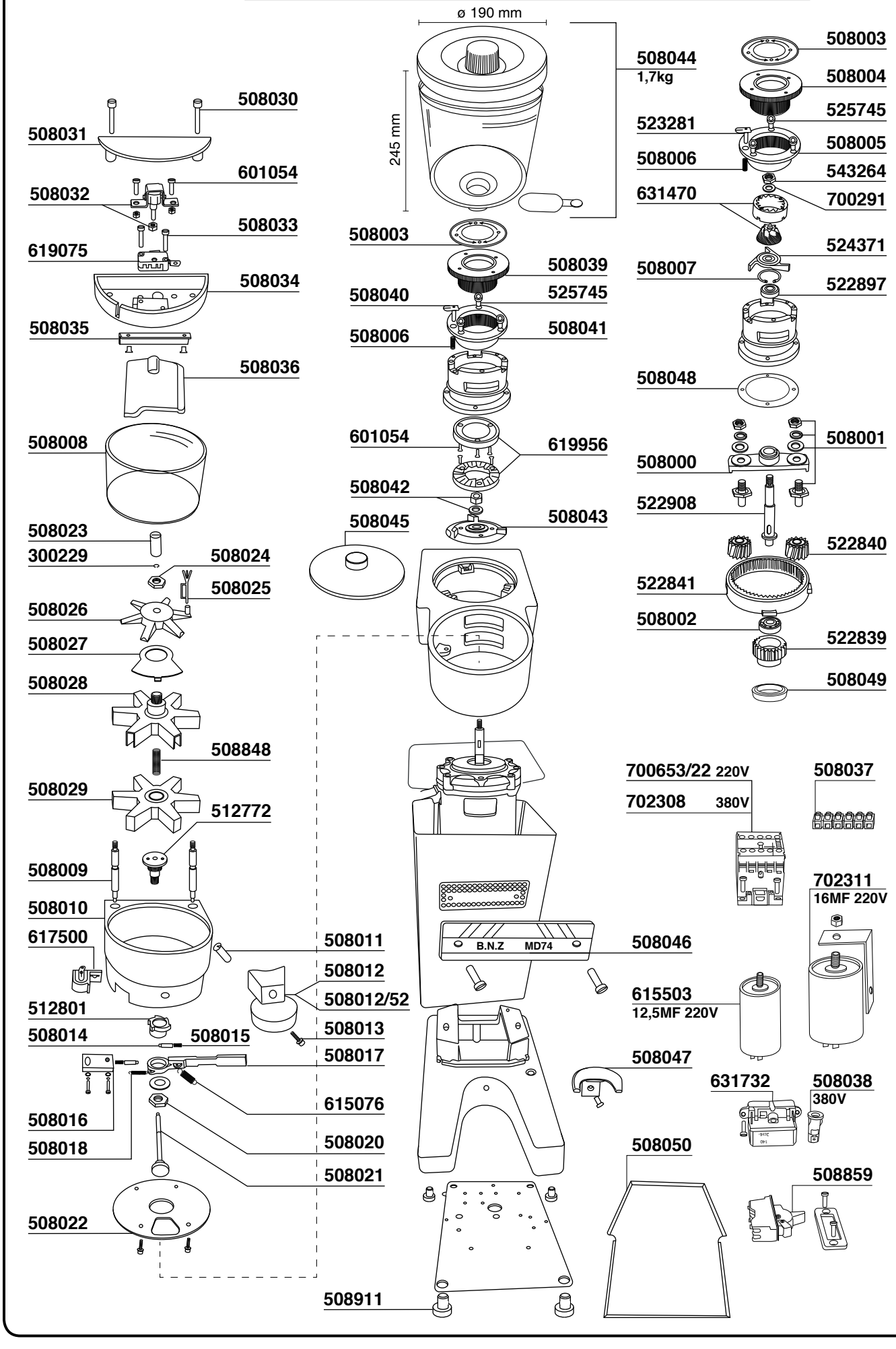

MACINACAFFE'

COMPAK

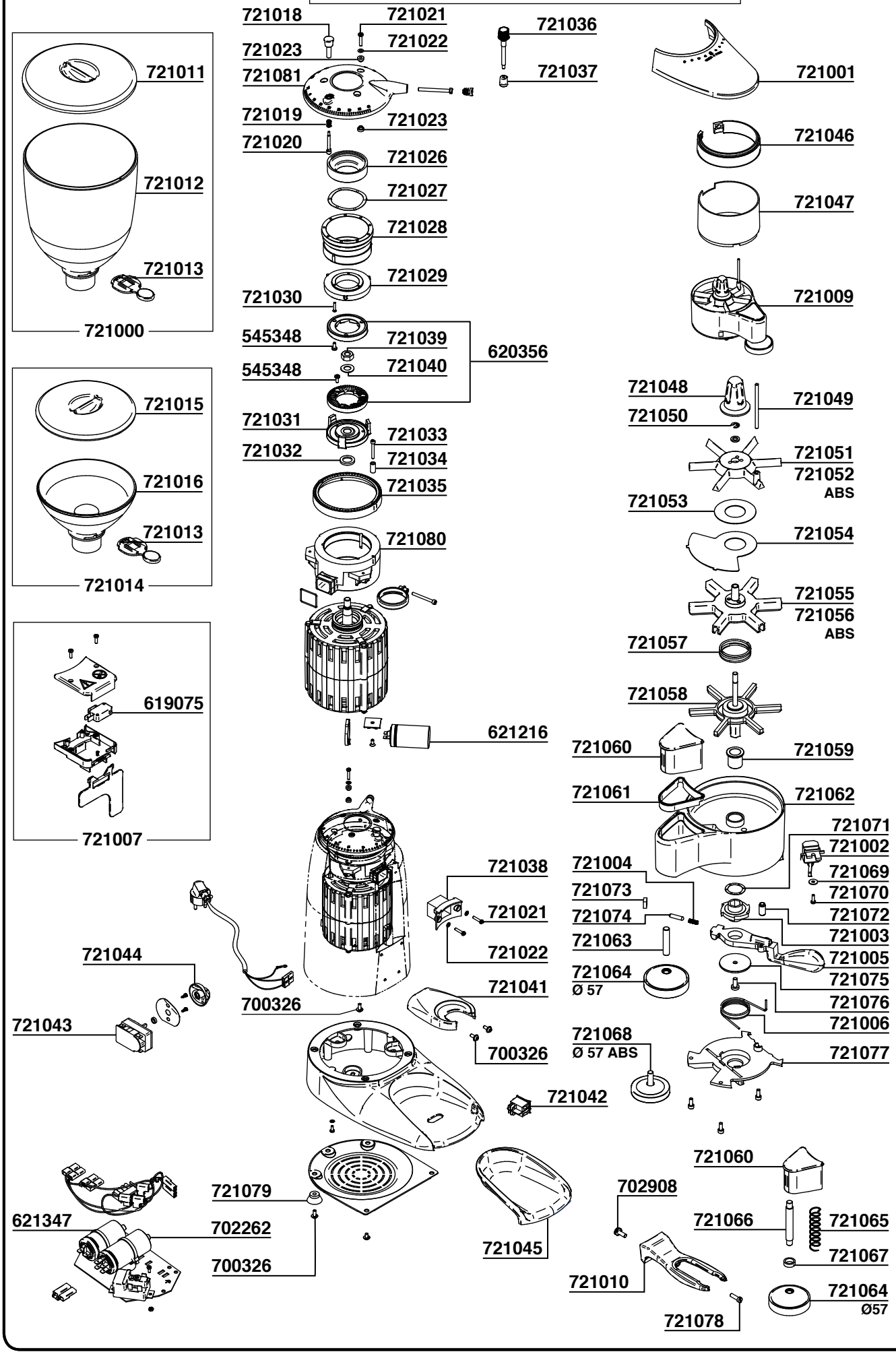

EUREKA MODEL MDM - MDMCA - MDME - MDMEA

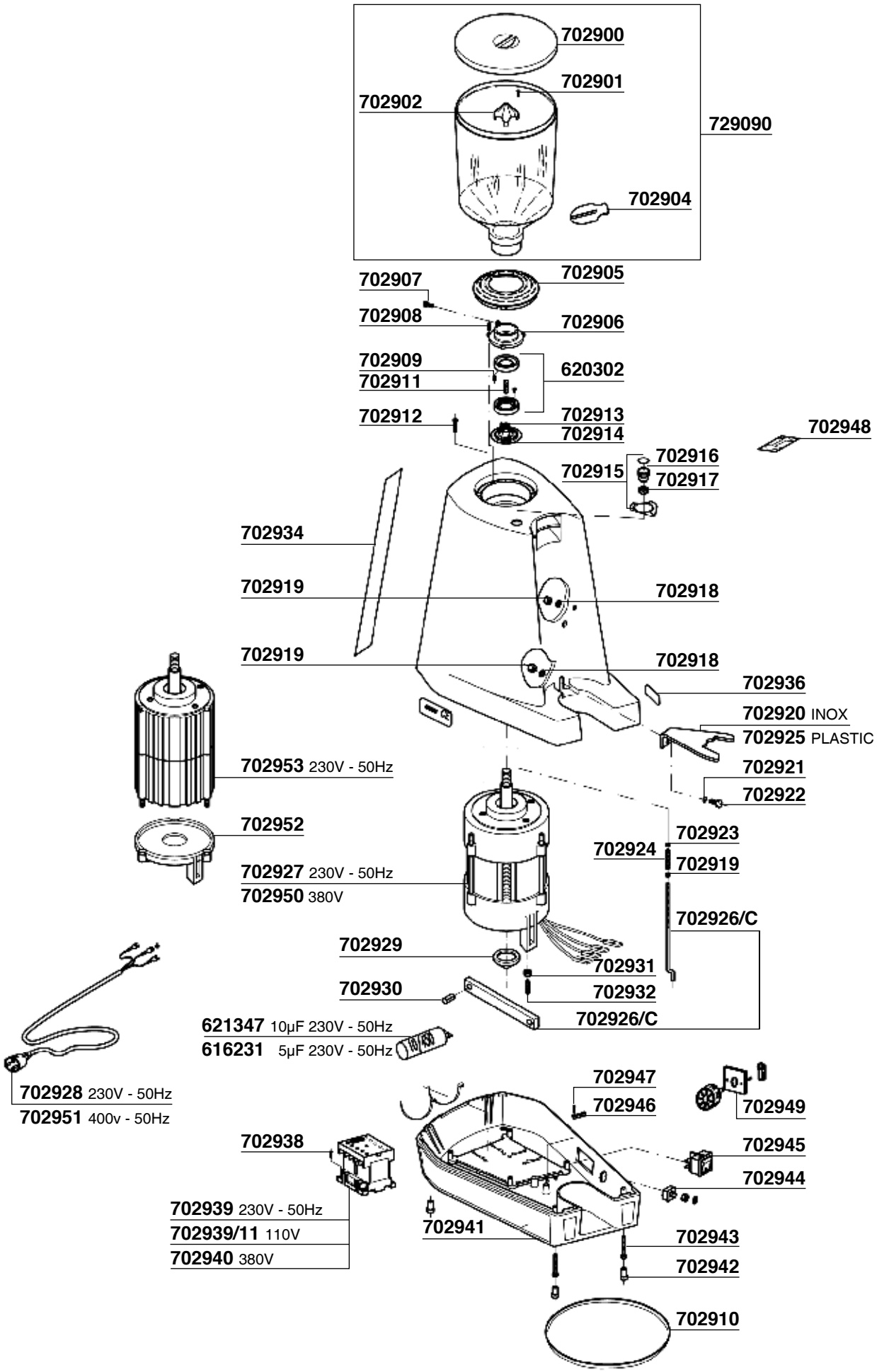

EUREKA MODEL: MDM - MDMCA - MDME - MDMEA

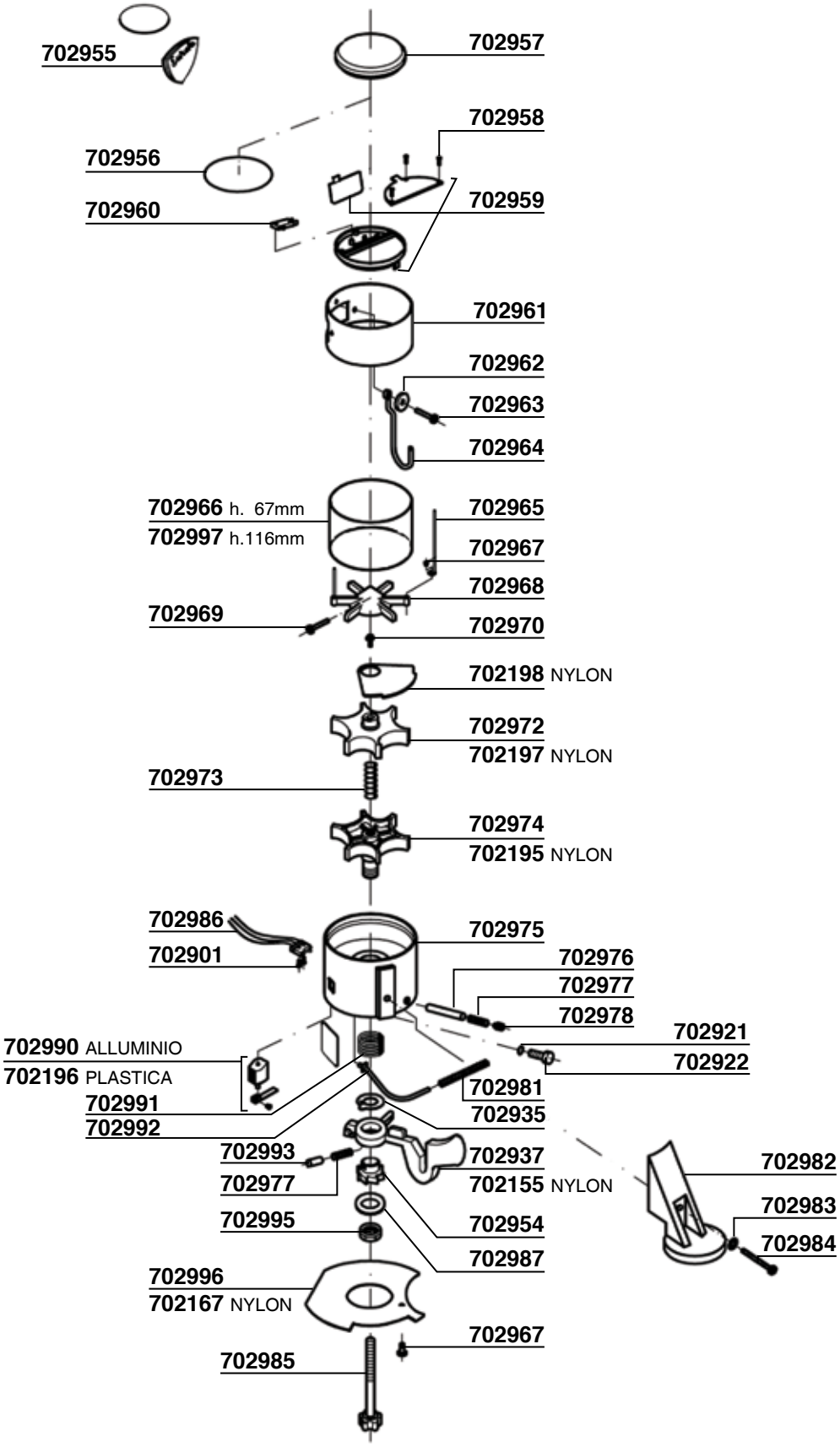

MACINACAFFE'

EUREKA MODEL MCF

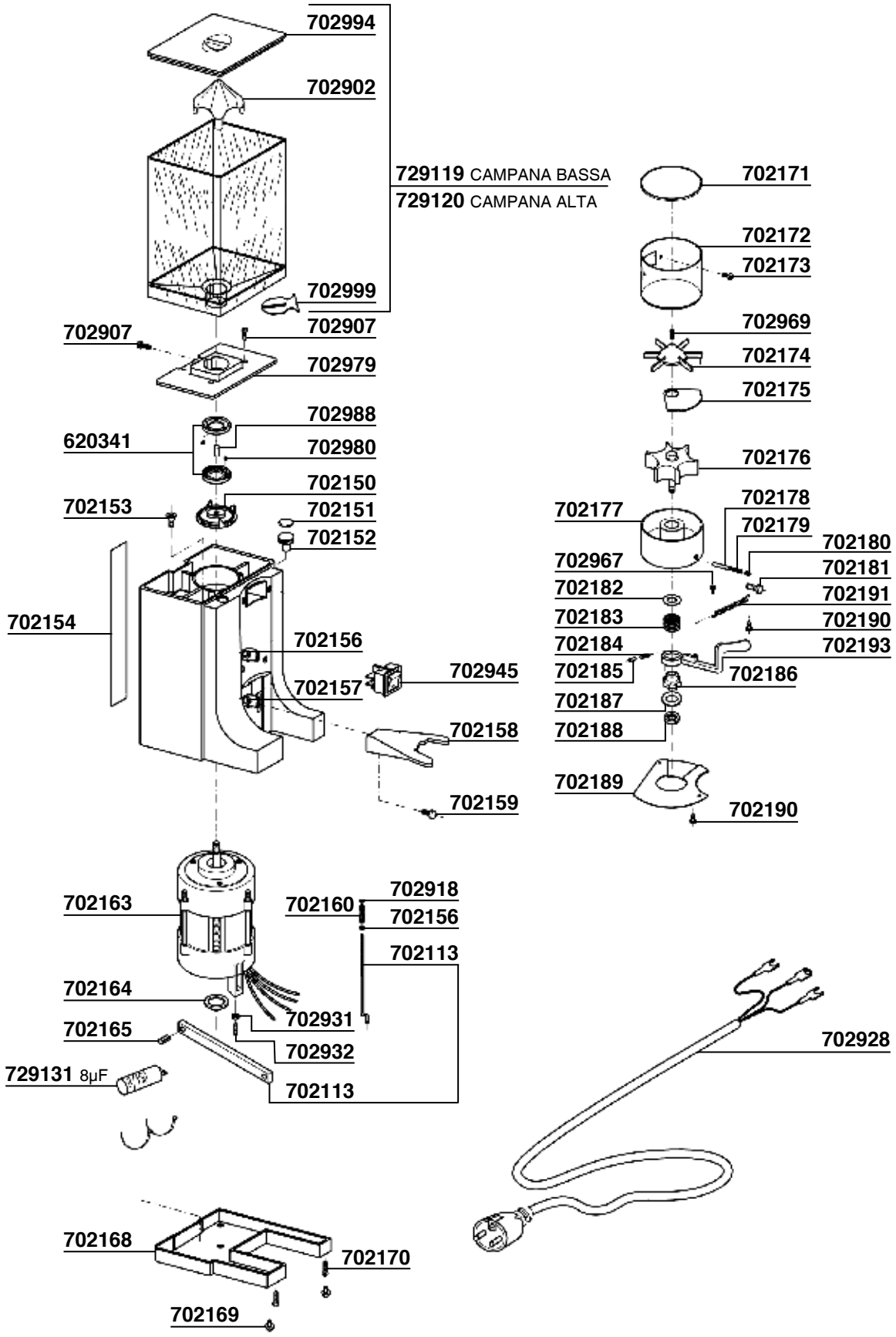

MACINACAFFE'

EUREKA MODEL: MYTHOS

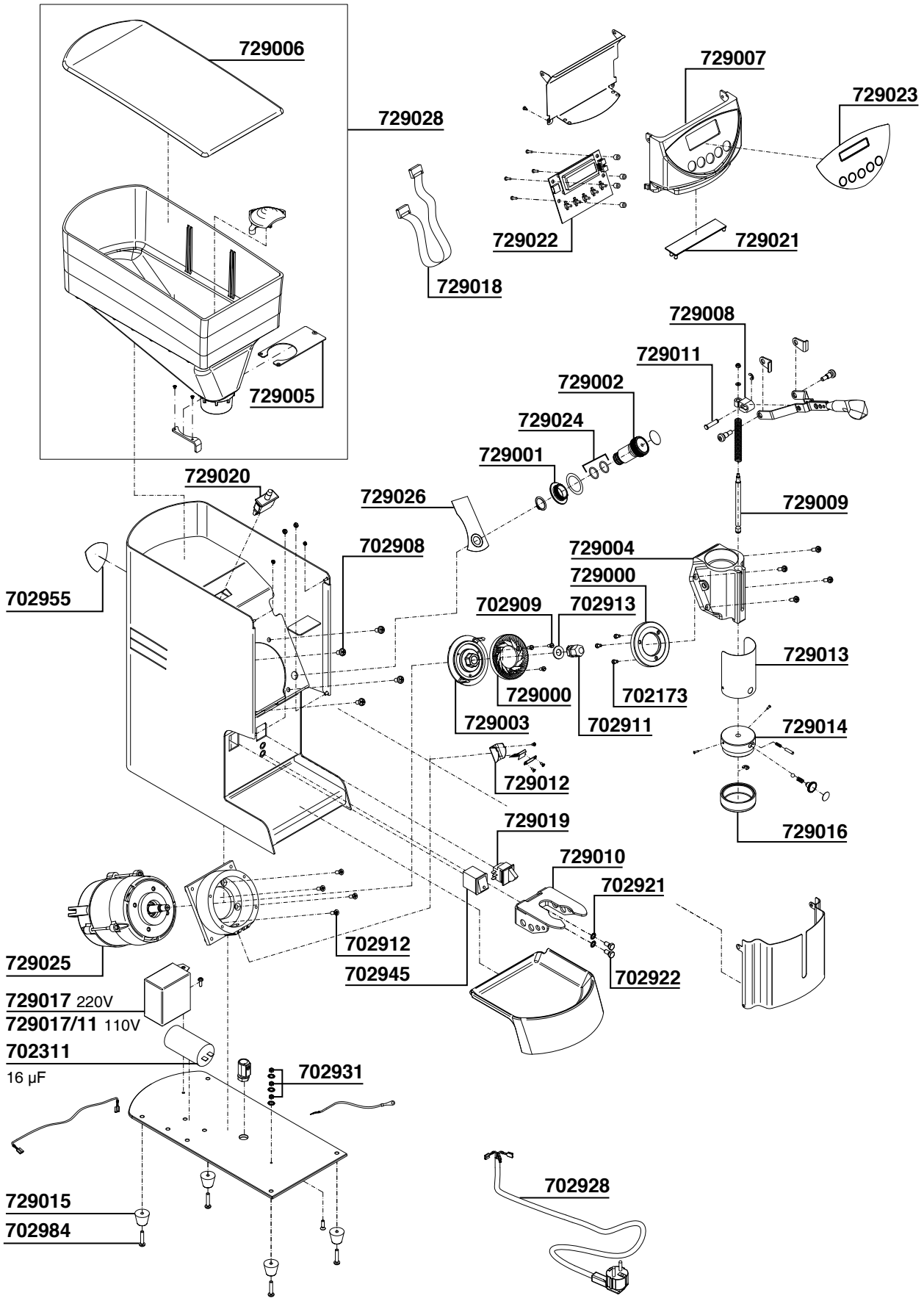

MACINACAFFE'

EUREKA MODEL: OLYMPUS

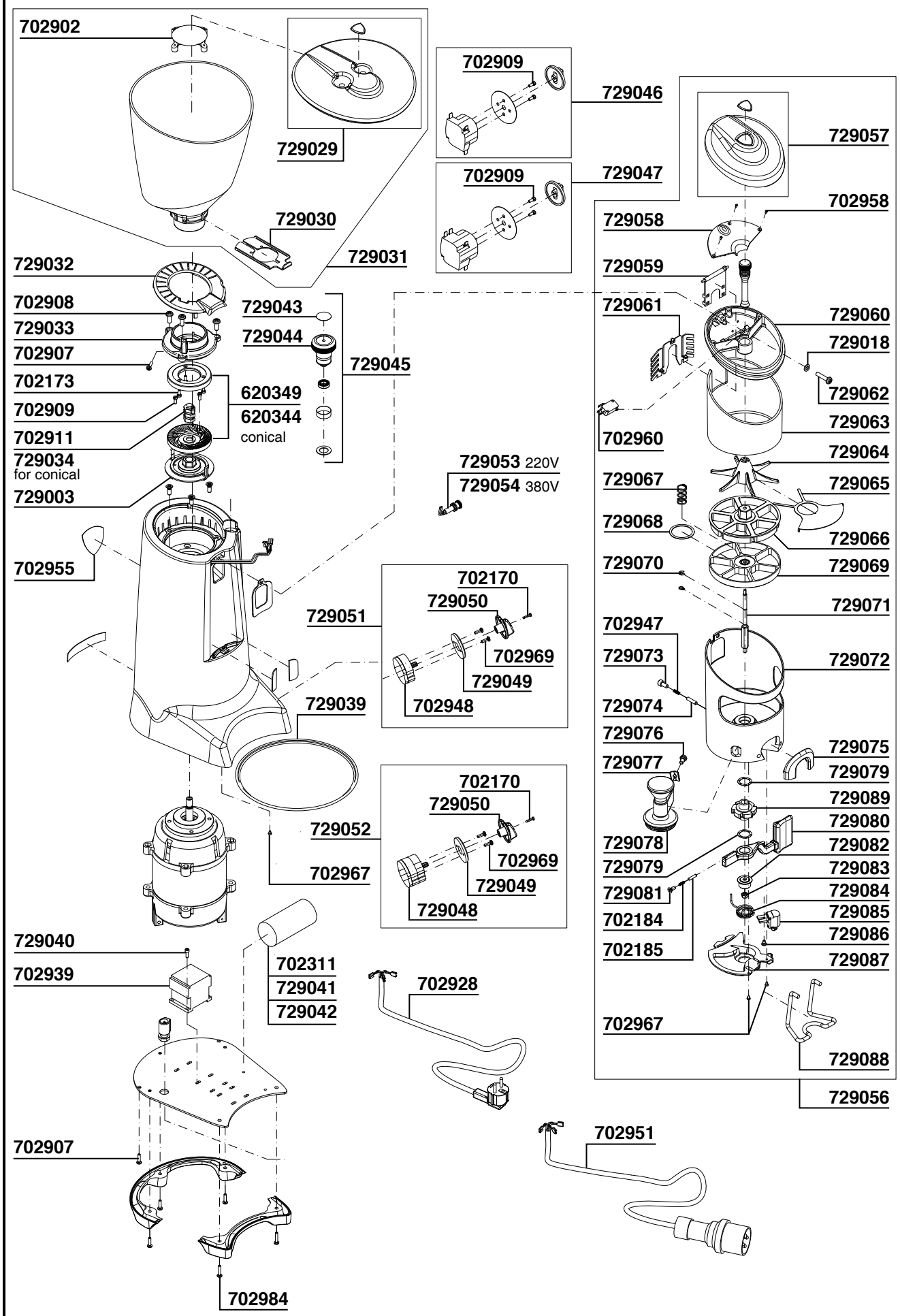

MACINACAFFE'

EUREKA MODEL: FASHION

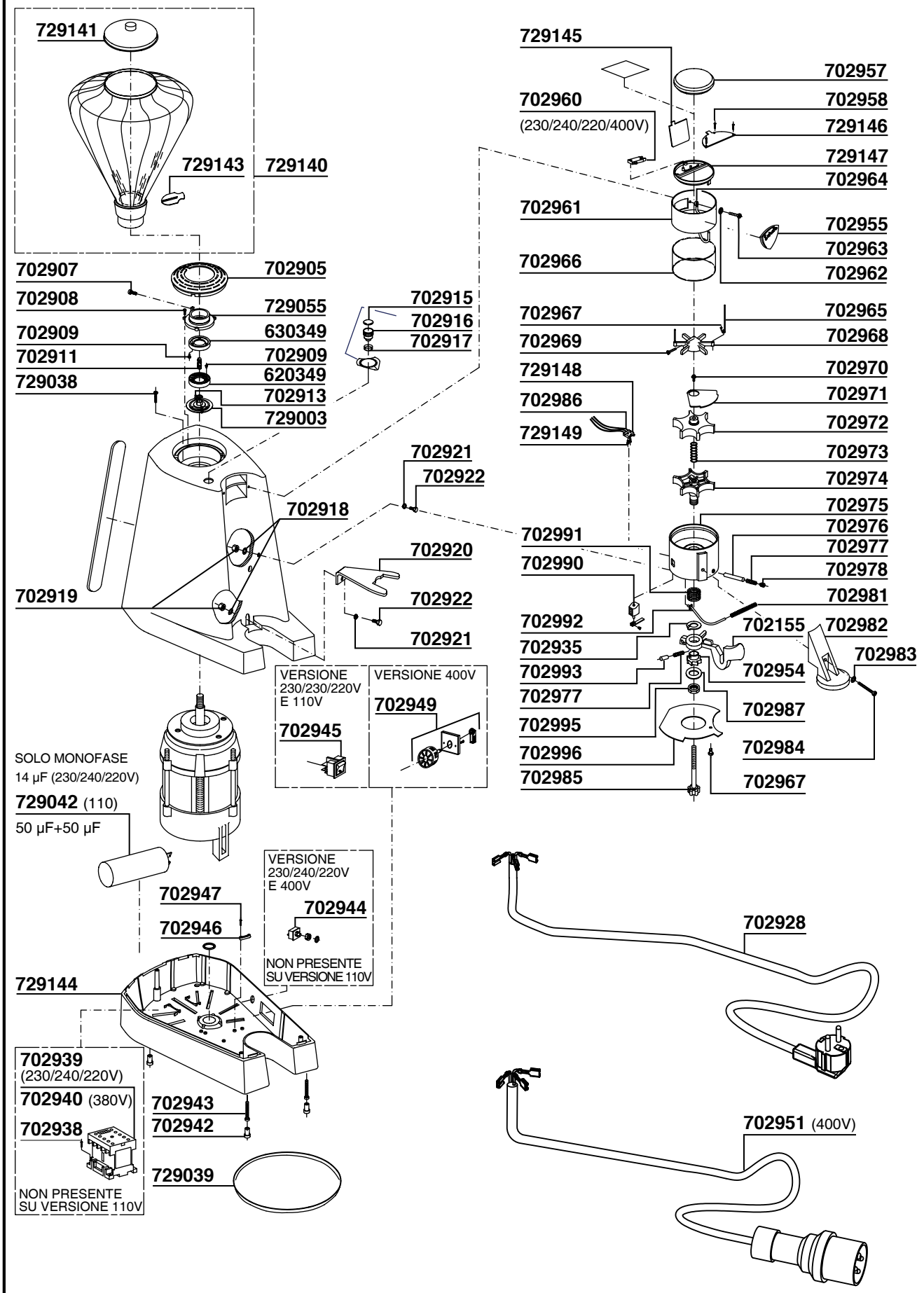

MACINACAFFE'

EUREKA MODEL: MIGNON ISTANTANEO

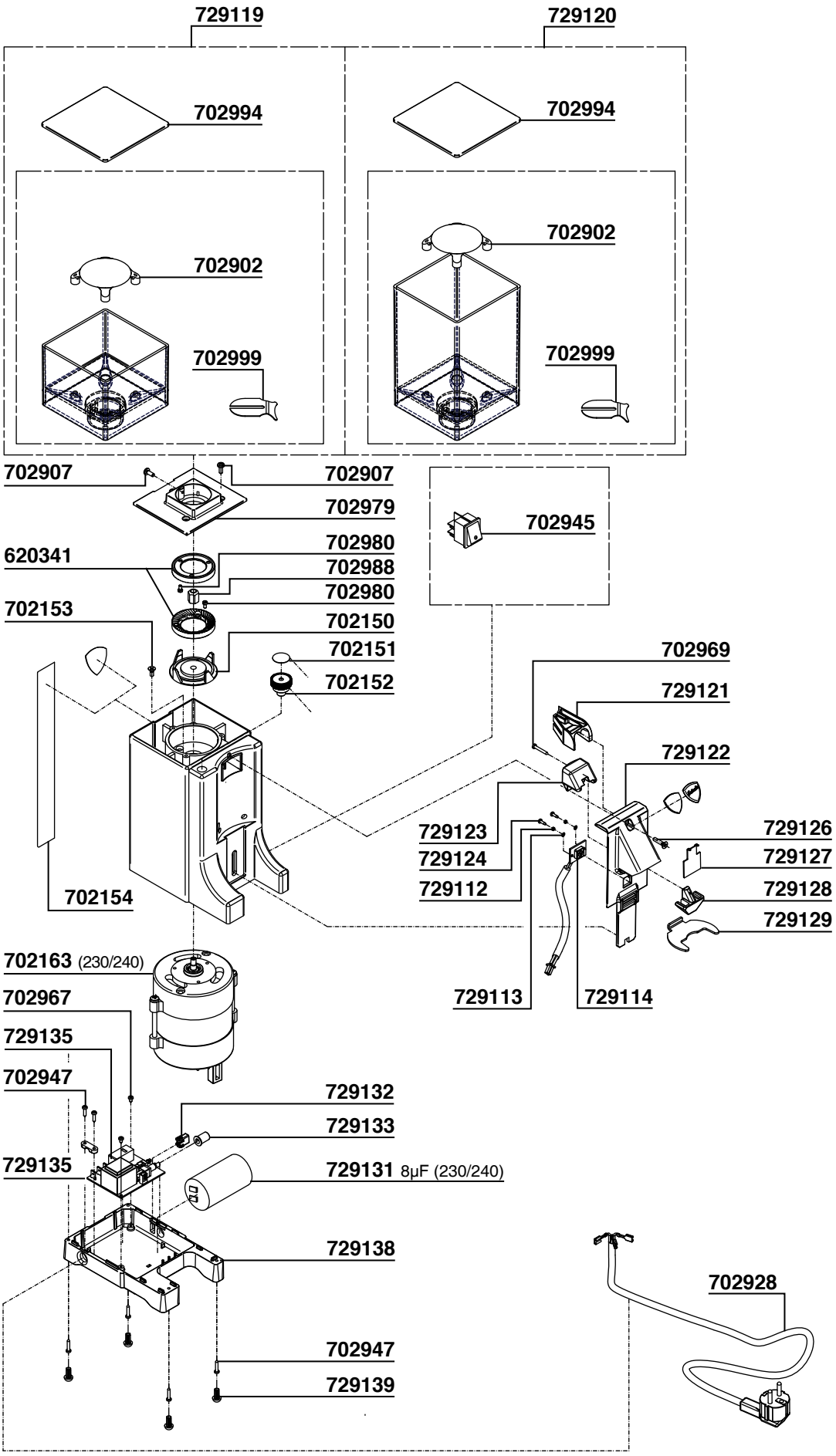

MACINACAFFE'

EUREKA MODEL: ZENITH

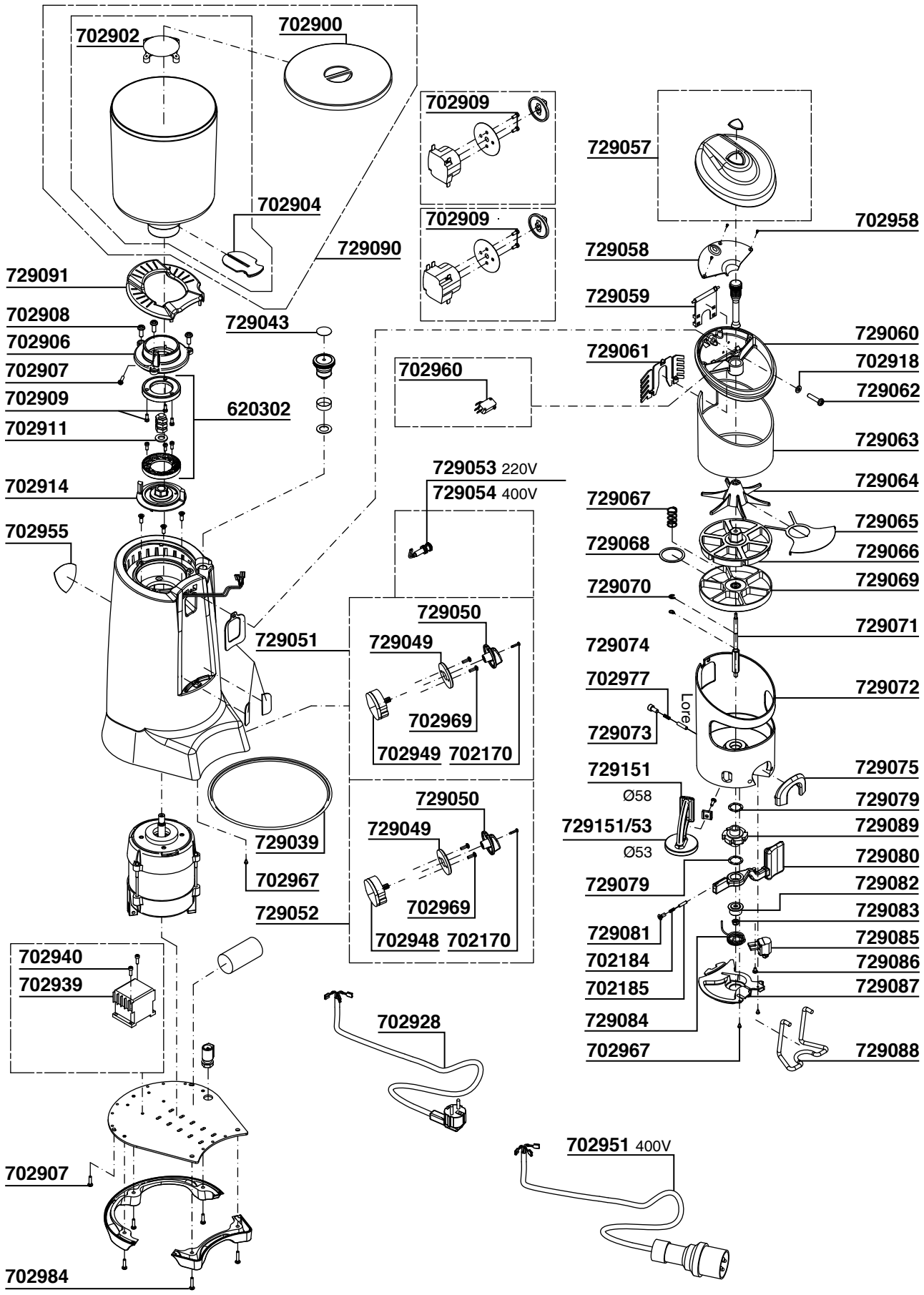

MACINACAFFE'

EUREKA MODEL: ZENITH ELETTRONICO

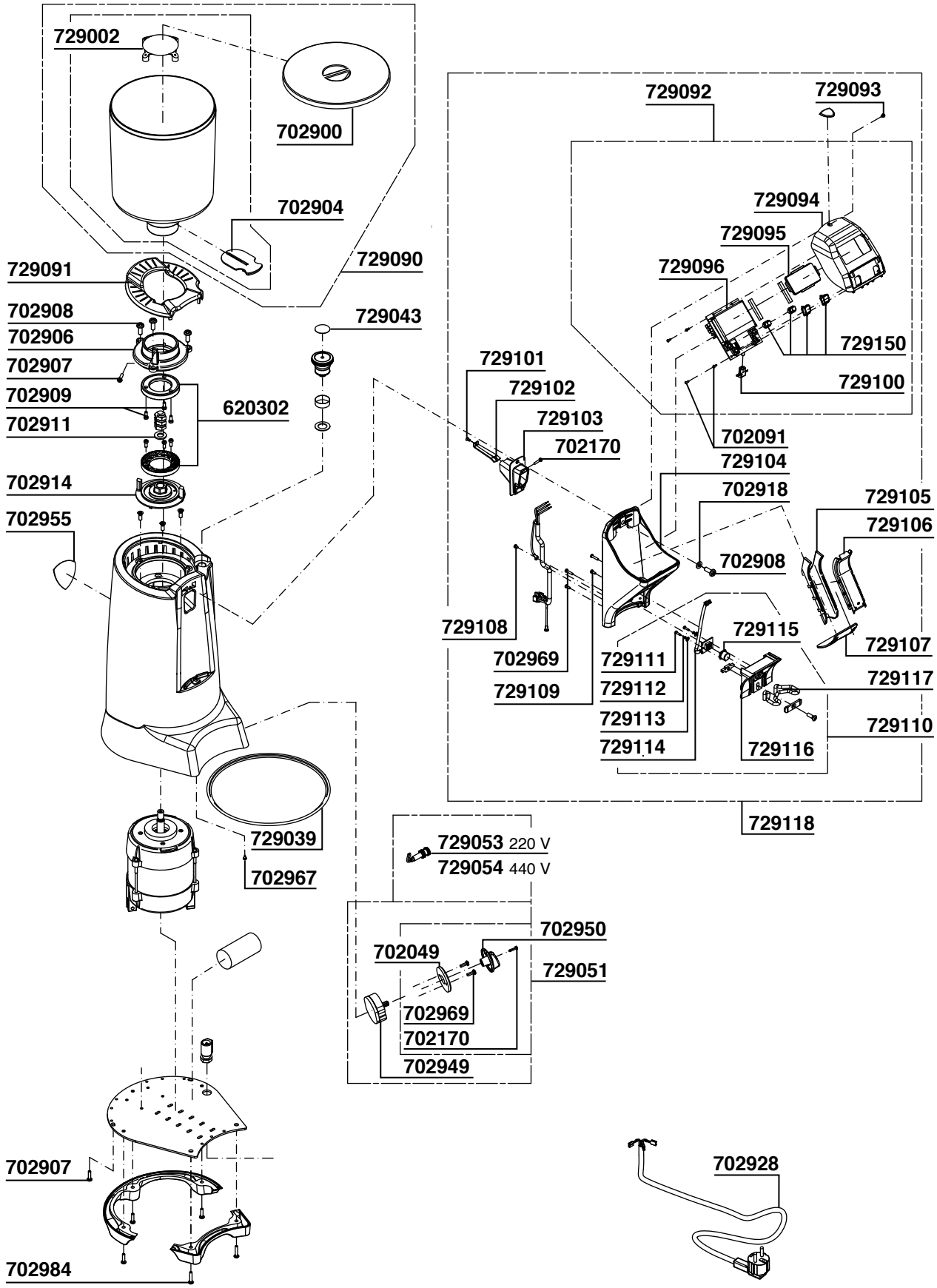

MACINACAFFE'

PARTI COMPATIBILI FAEMA

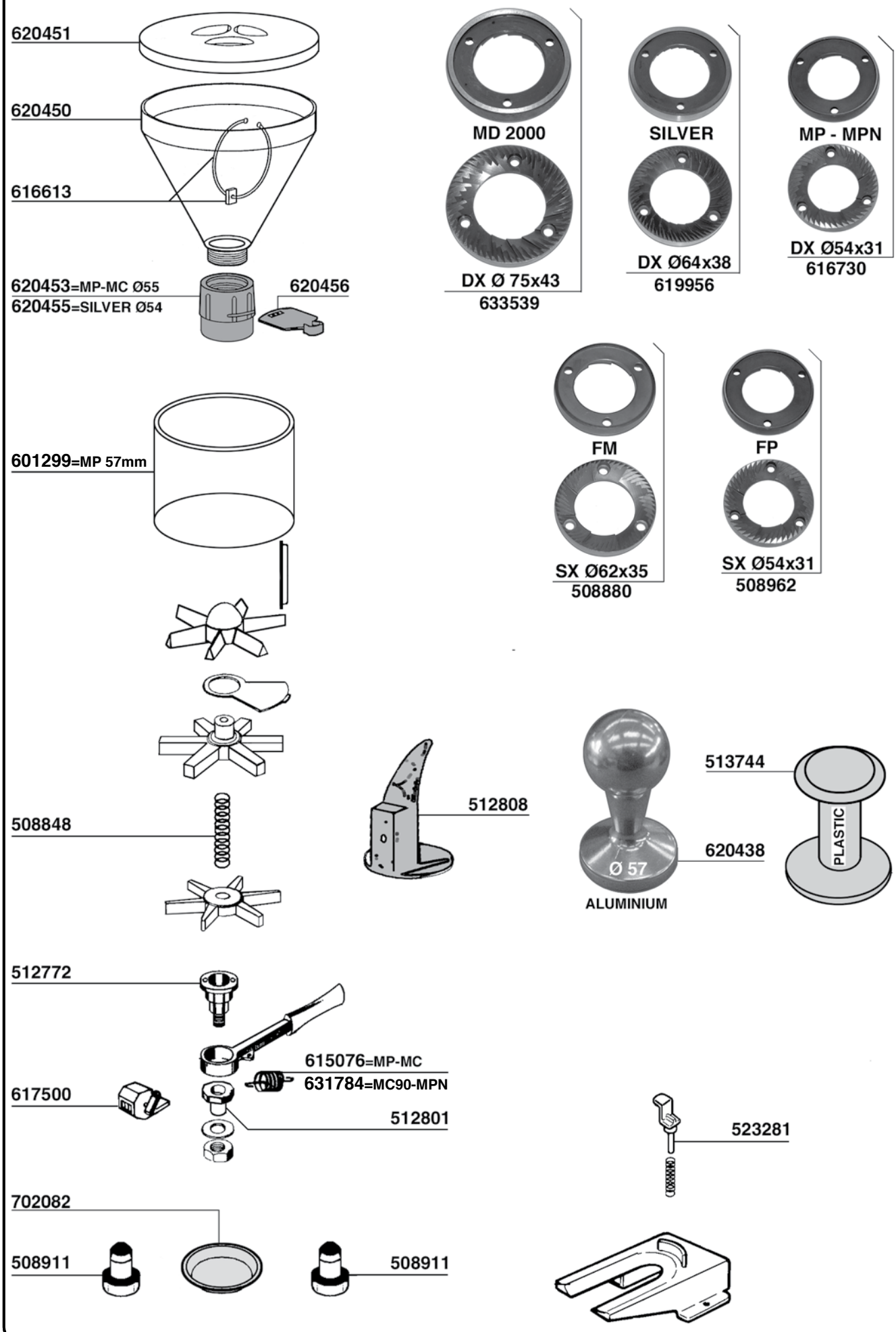

PARTI COMPATIBILI FAEMA

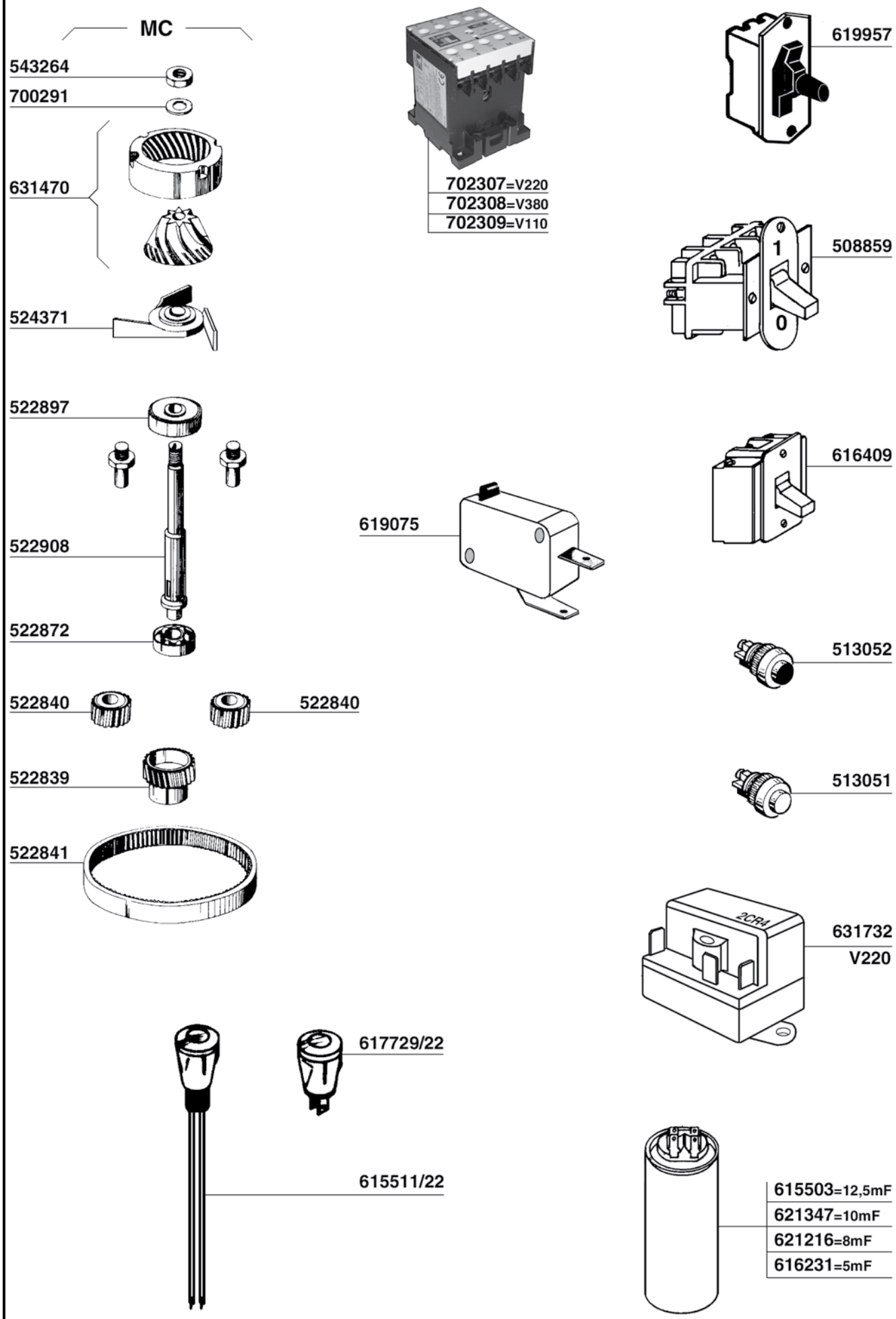

MACINACAFFE'

FIORENZATO MC MODEL: F5 - F6

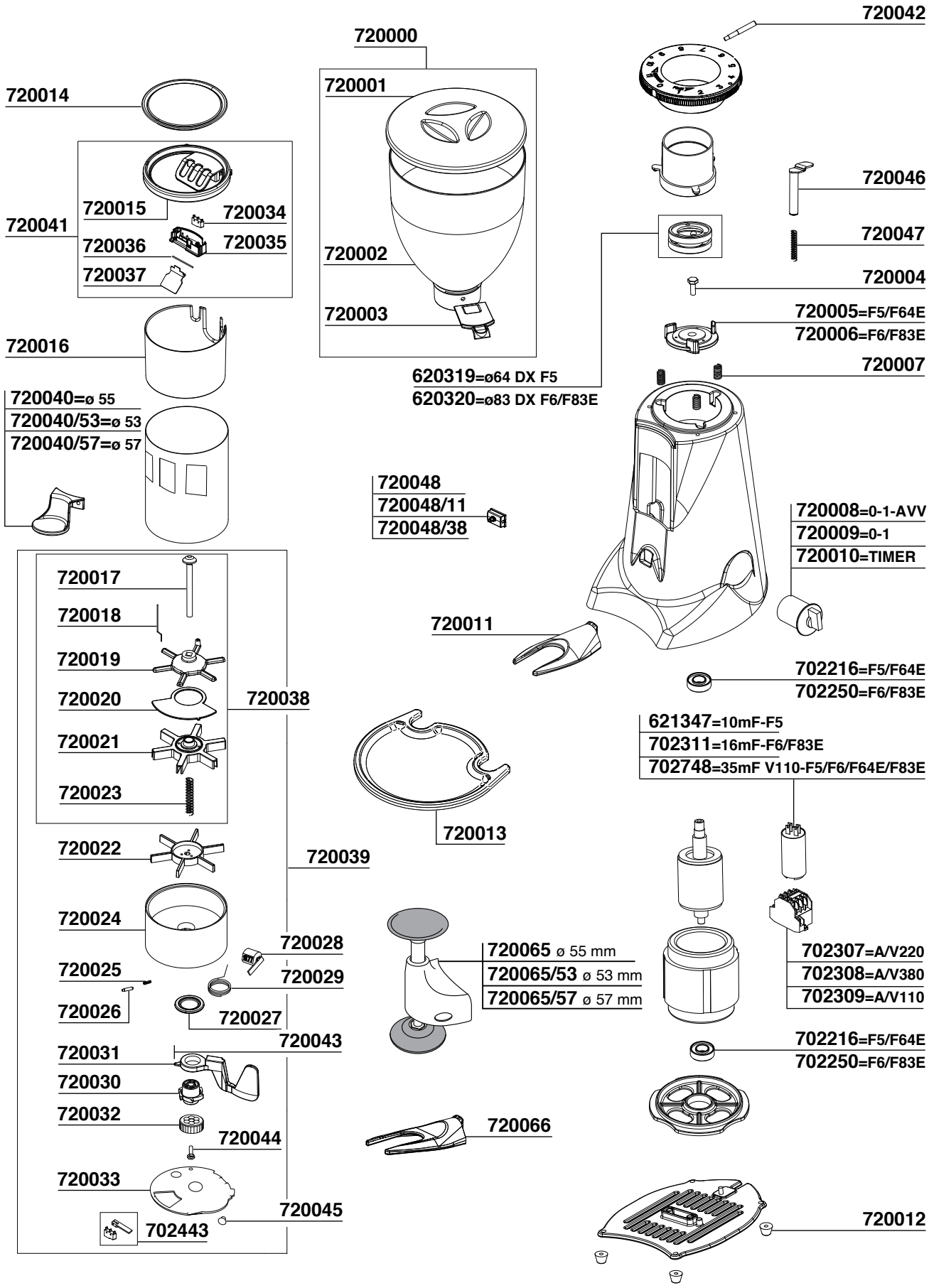

MACINACAFFE'

FIORENZATO MC MODEL: F64E - F64EVO - F83E

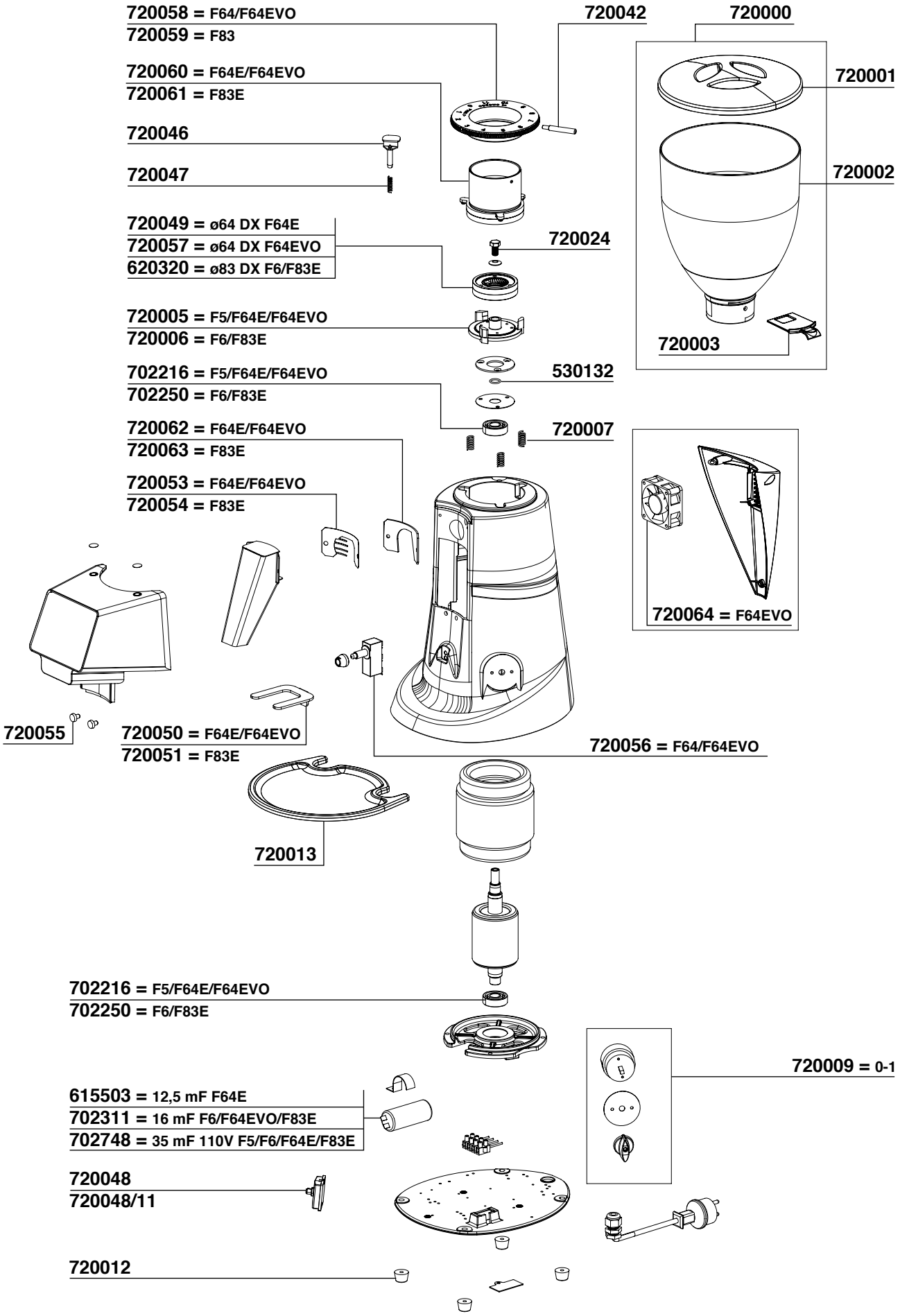

H5

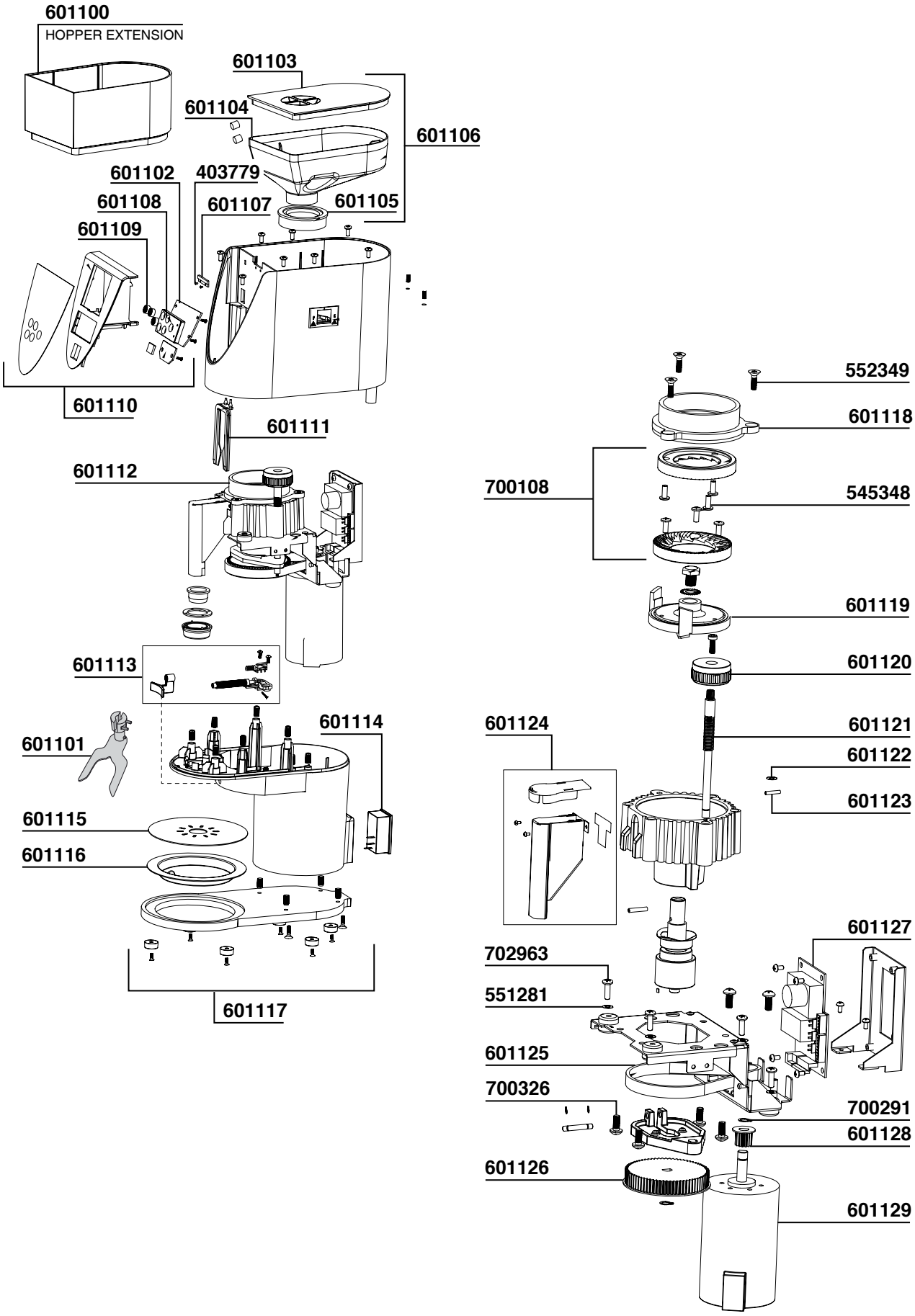
601100
HOPPER EXTENSION
601103
601104
601106
601102
403779
601108
601107
601105
601109
601110
601111
601112
601113
601114
601101
601115
601116
601117
552349
601118
700108
545348
601119
601120
601124
601121
601122
601123
601127
702963
551281
601125
700326
700291
601128
601126
601129

MACINACAFFE'

HC 600

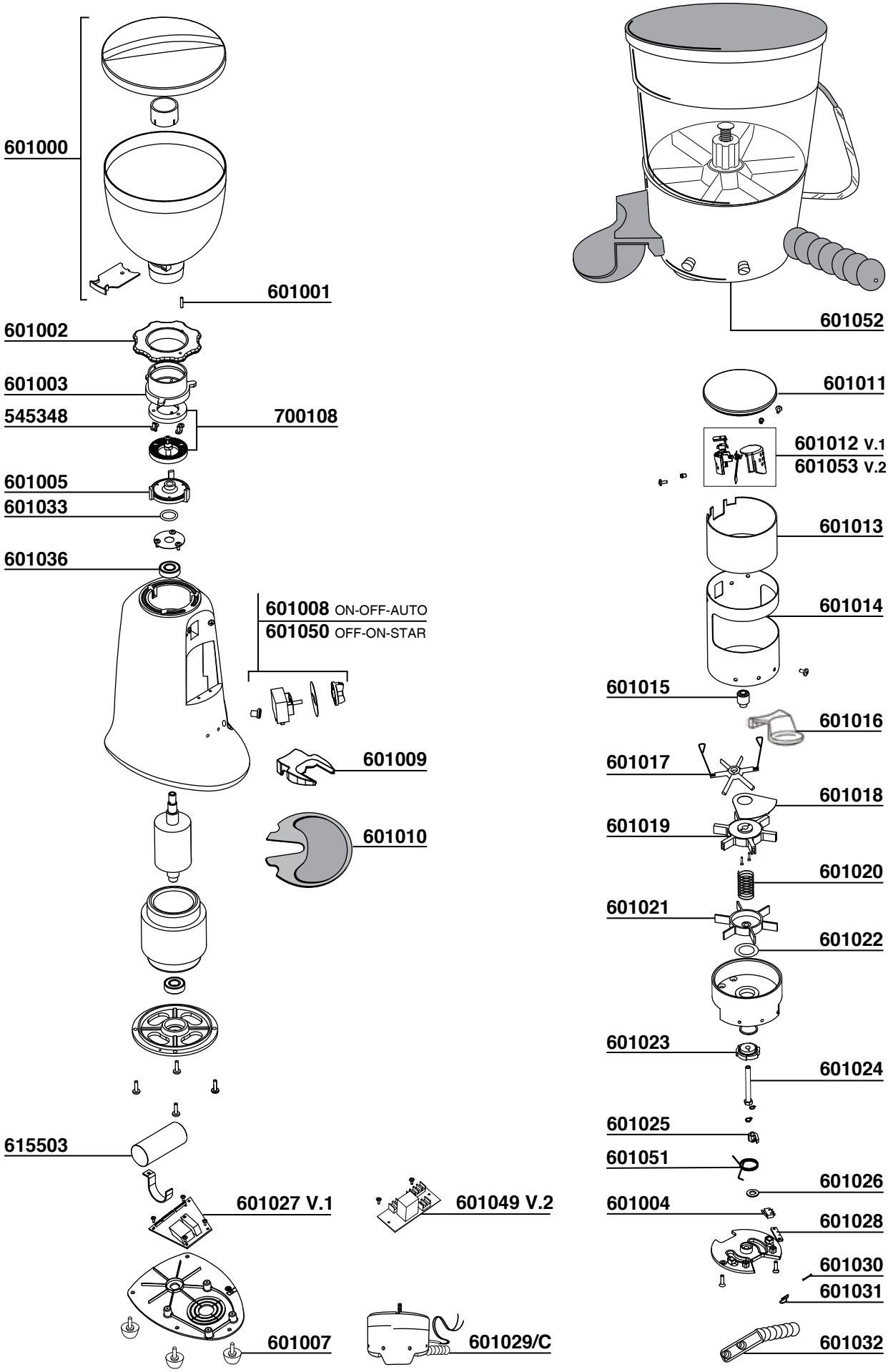

HC 700

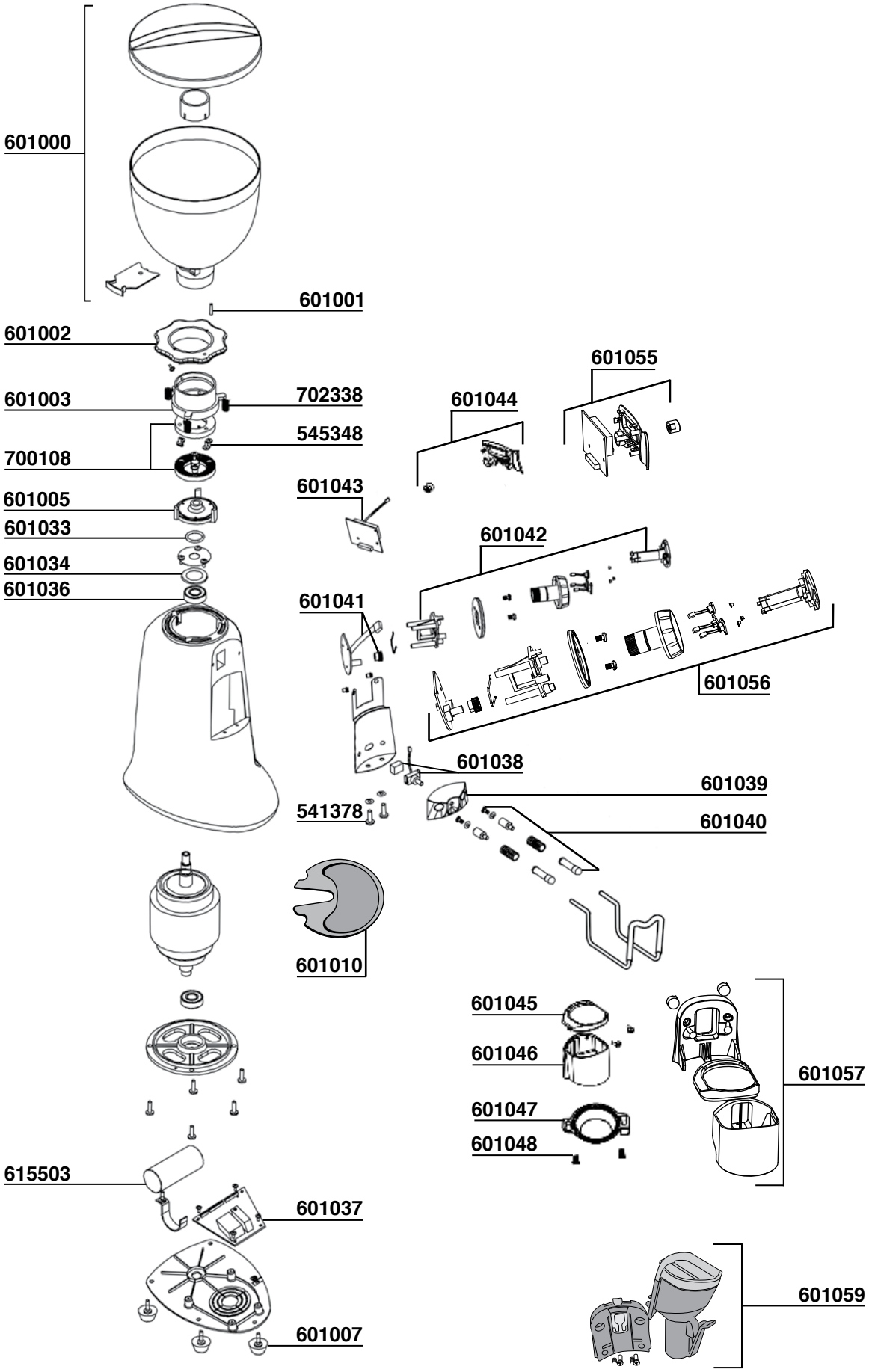
601000
601001
601002
601003
702338
545348
700108
601005
601033
601034
601036
601055
601044
601043
601042
601041
601056
601038
601039
541378
601040
601010
601045
601046
601057
601047
601048
615503
601037
601059
601007

MACAP MODEL MX - MXT - MXA - MXK

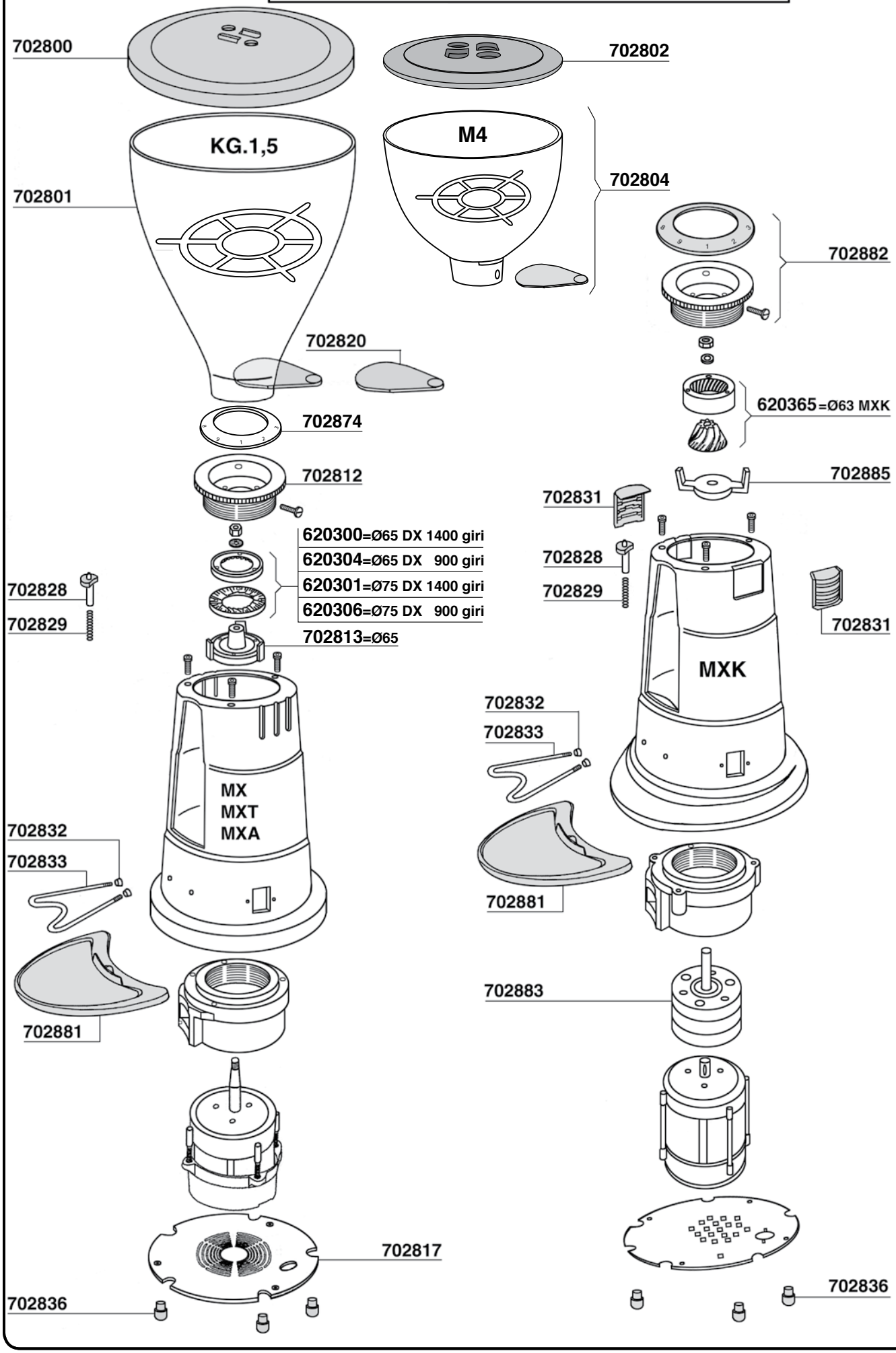

MACINACAFFE'

MACAP MODEL MX - MXT - MXA - MXK

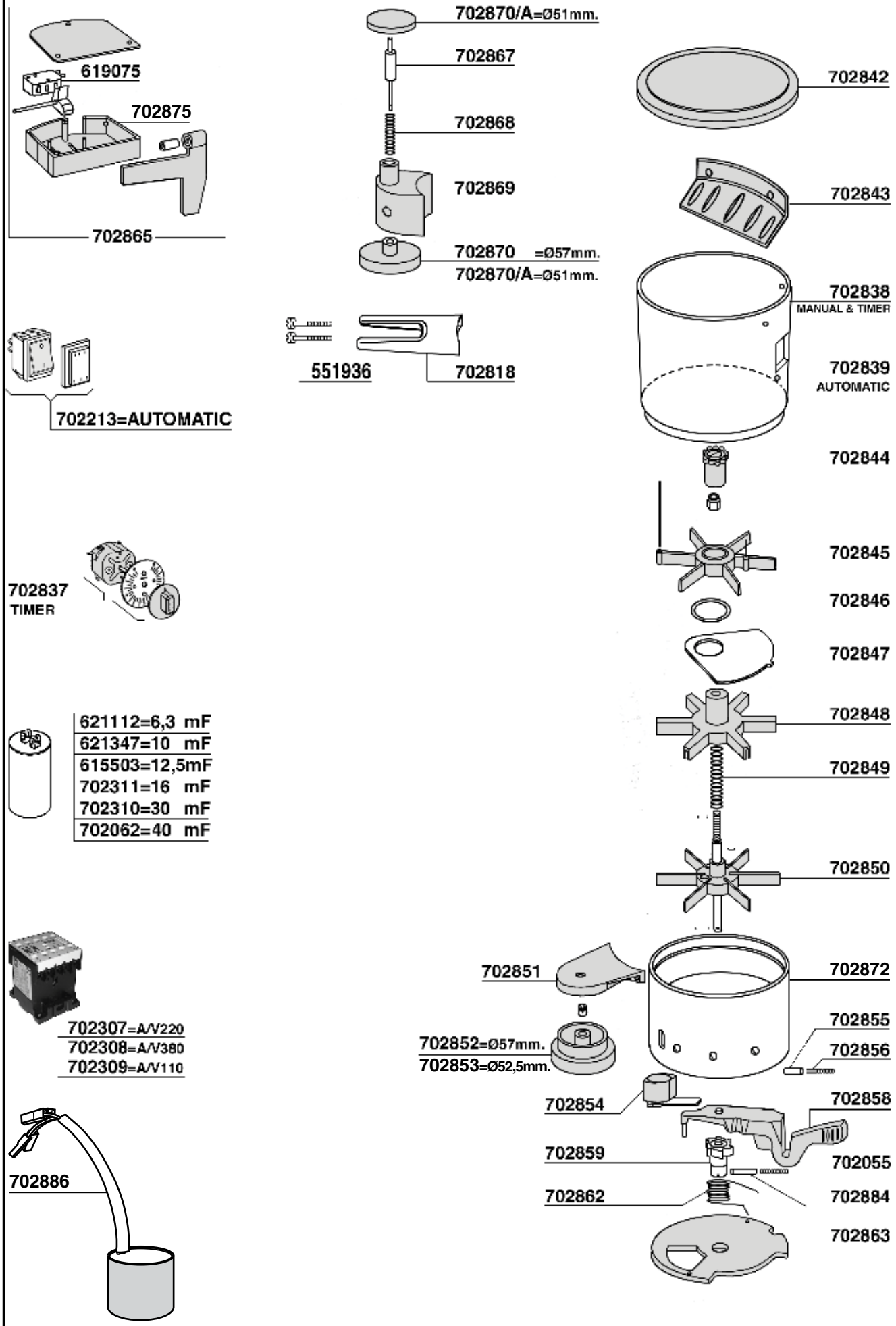

MACINACAFFE'

Tav. 29

MACAP MODEL M2D

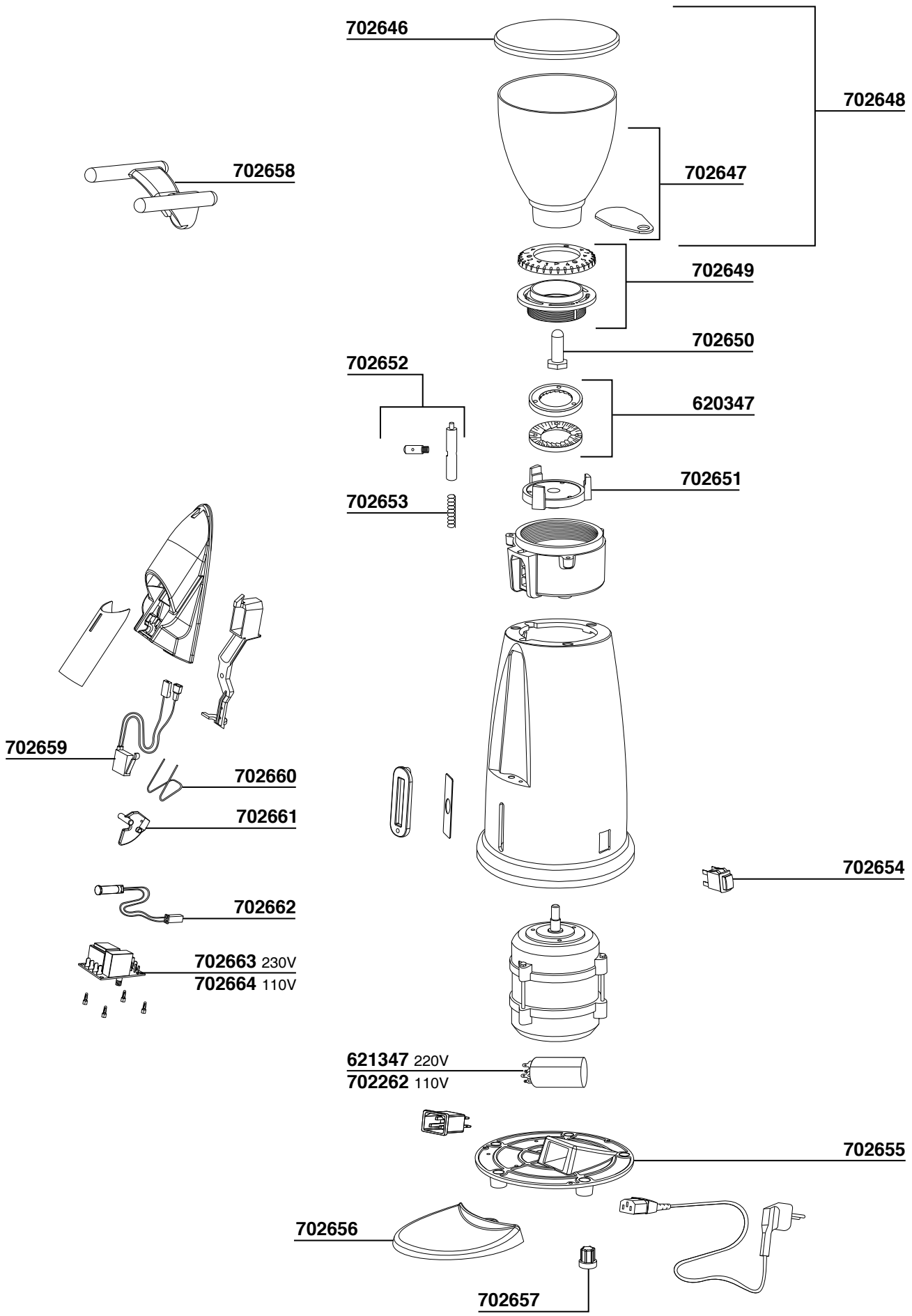

MACINACAFFE'

MACAP MODEL M5D-M5D PLUS

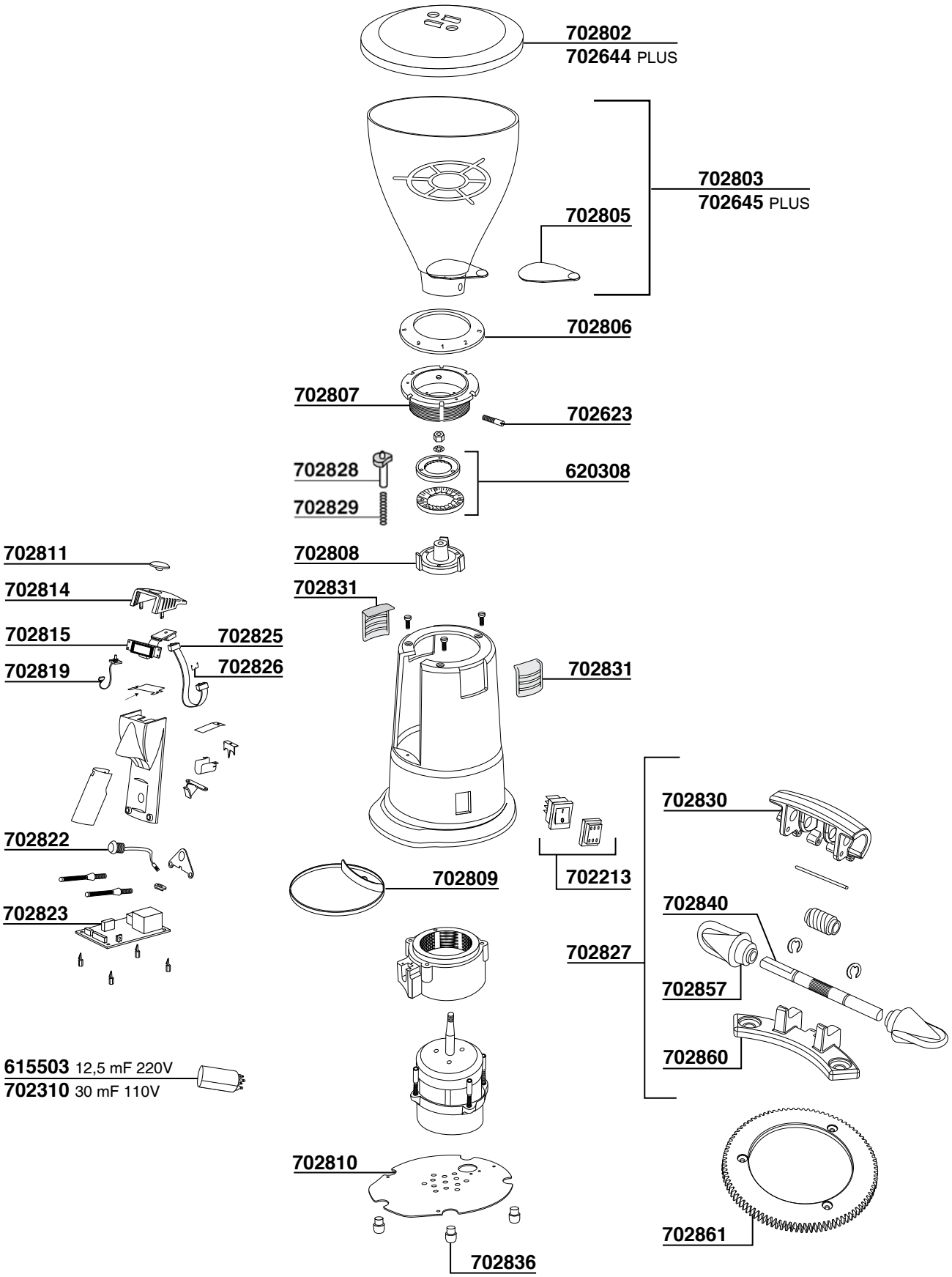

MACINACAFFE'

MACAP MODEL M7D

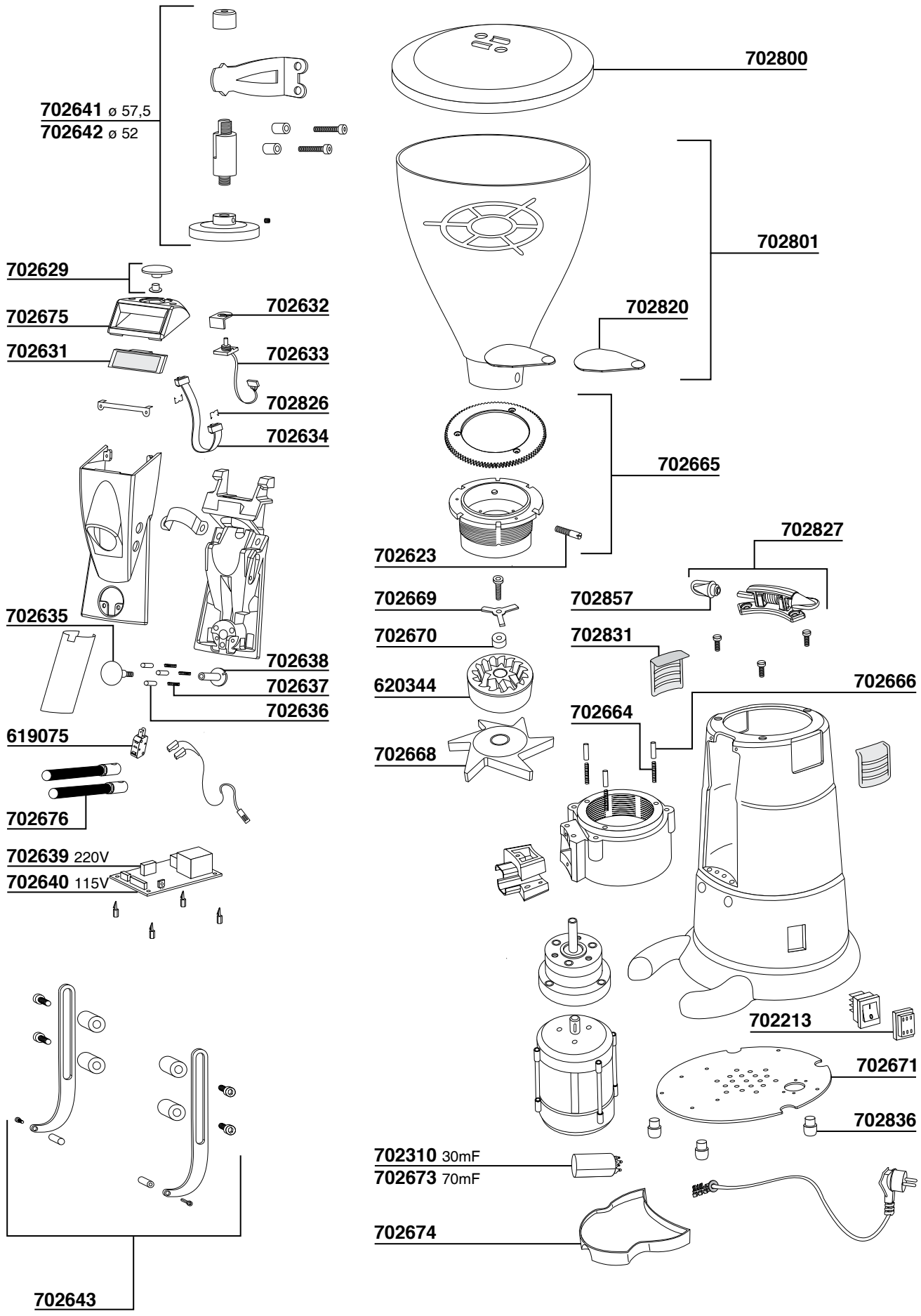

MACINACAFFE'

MACAP MODEL MXD Xtreme

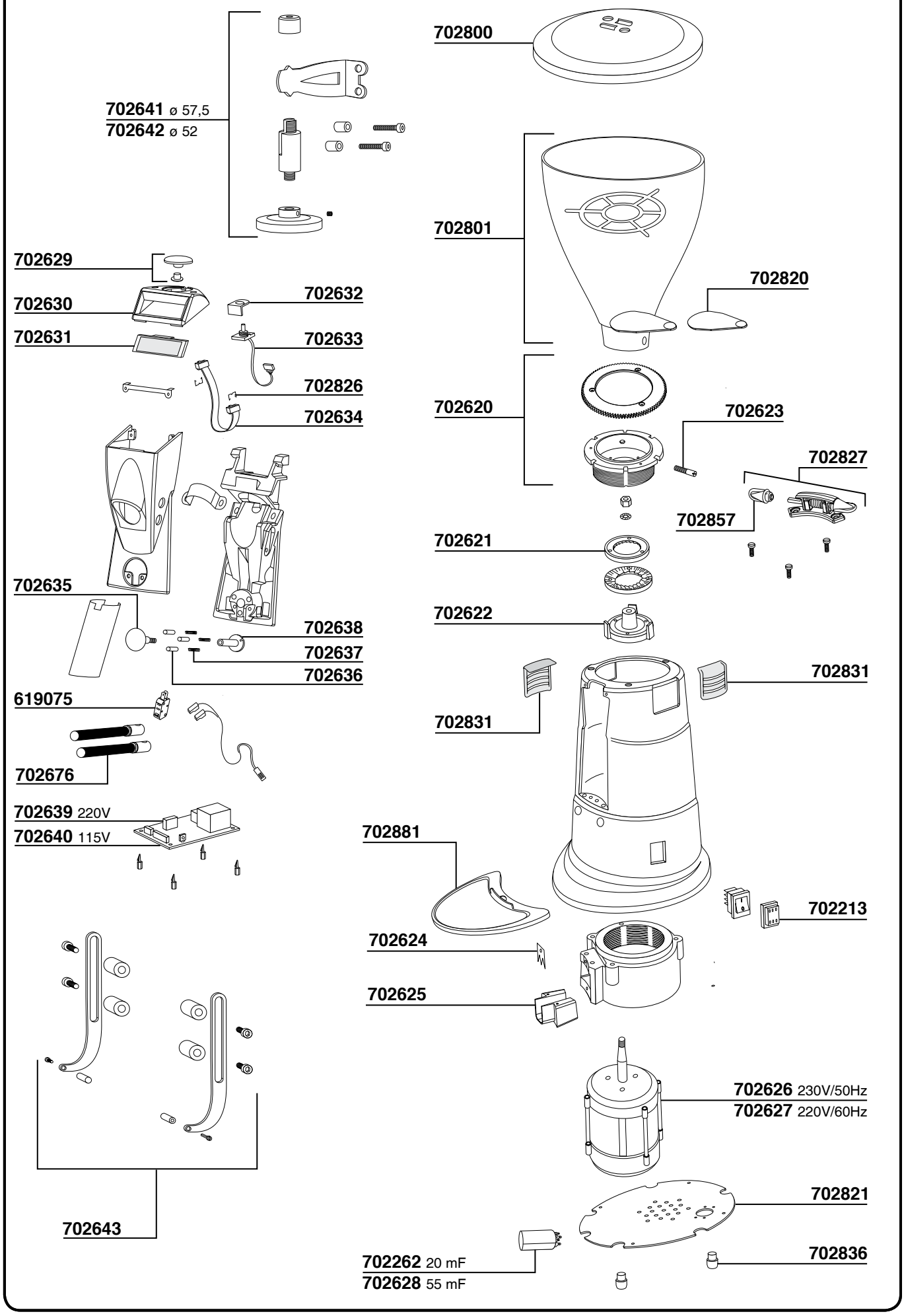

MACINACAFFE'

MACAP MODEL CPS

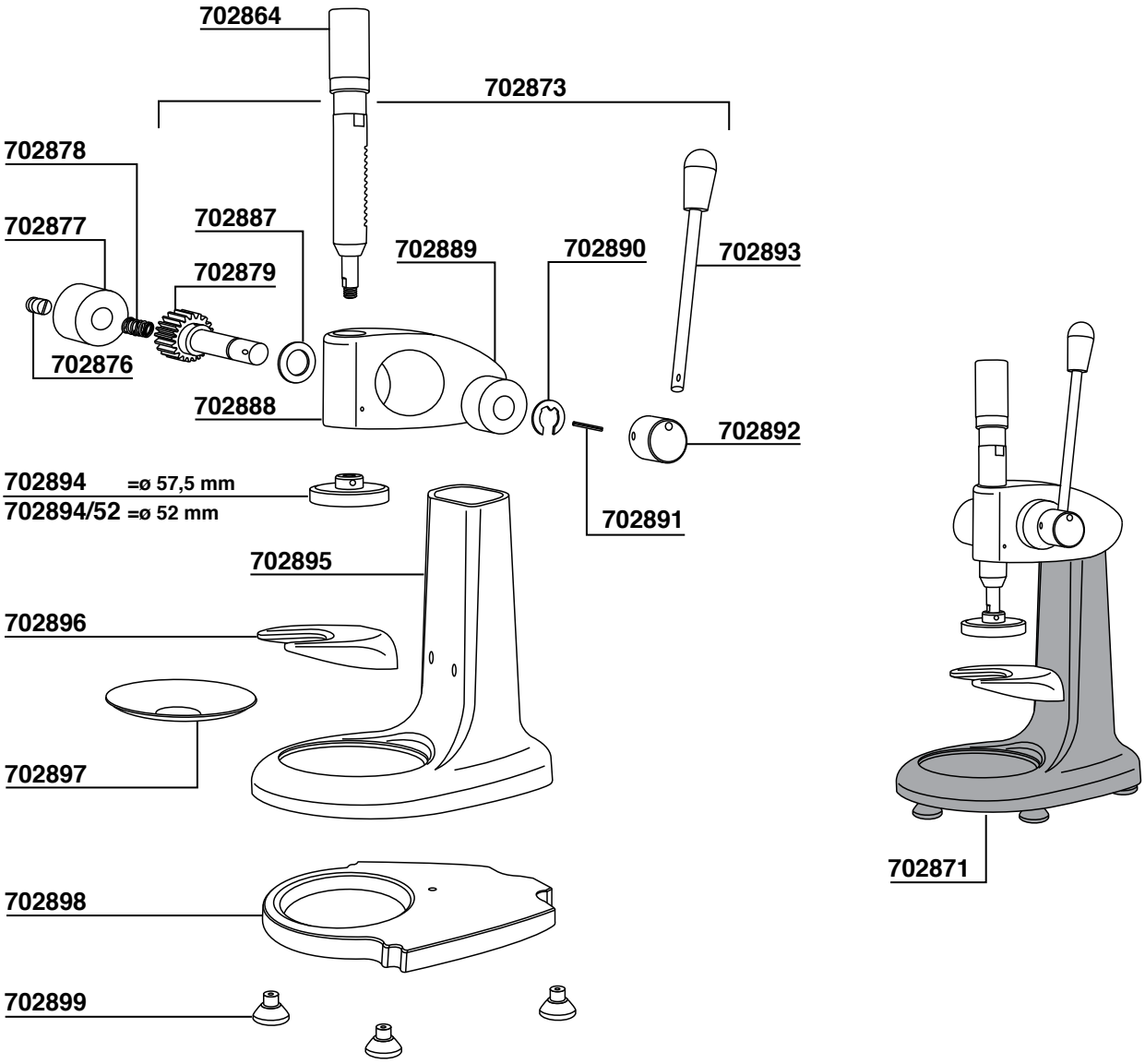

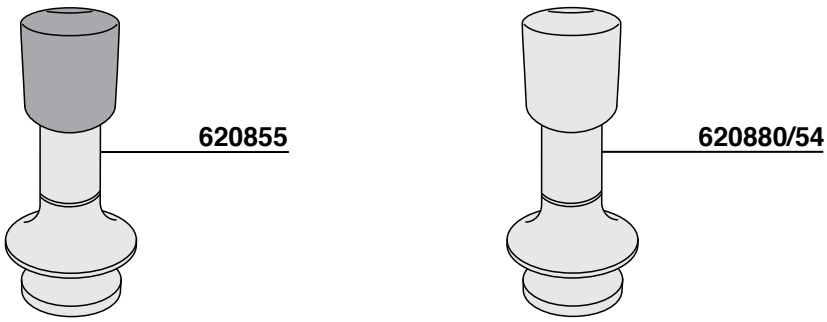

MAZZER MODEL: JOLLY - MAJOR

JLY =MODEL JOLLY MJR =MODEL MAJOR

S= MANUAL A= AUTOMATIC

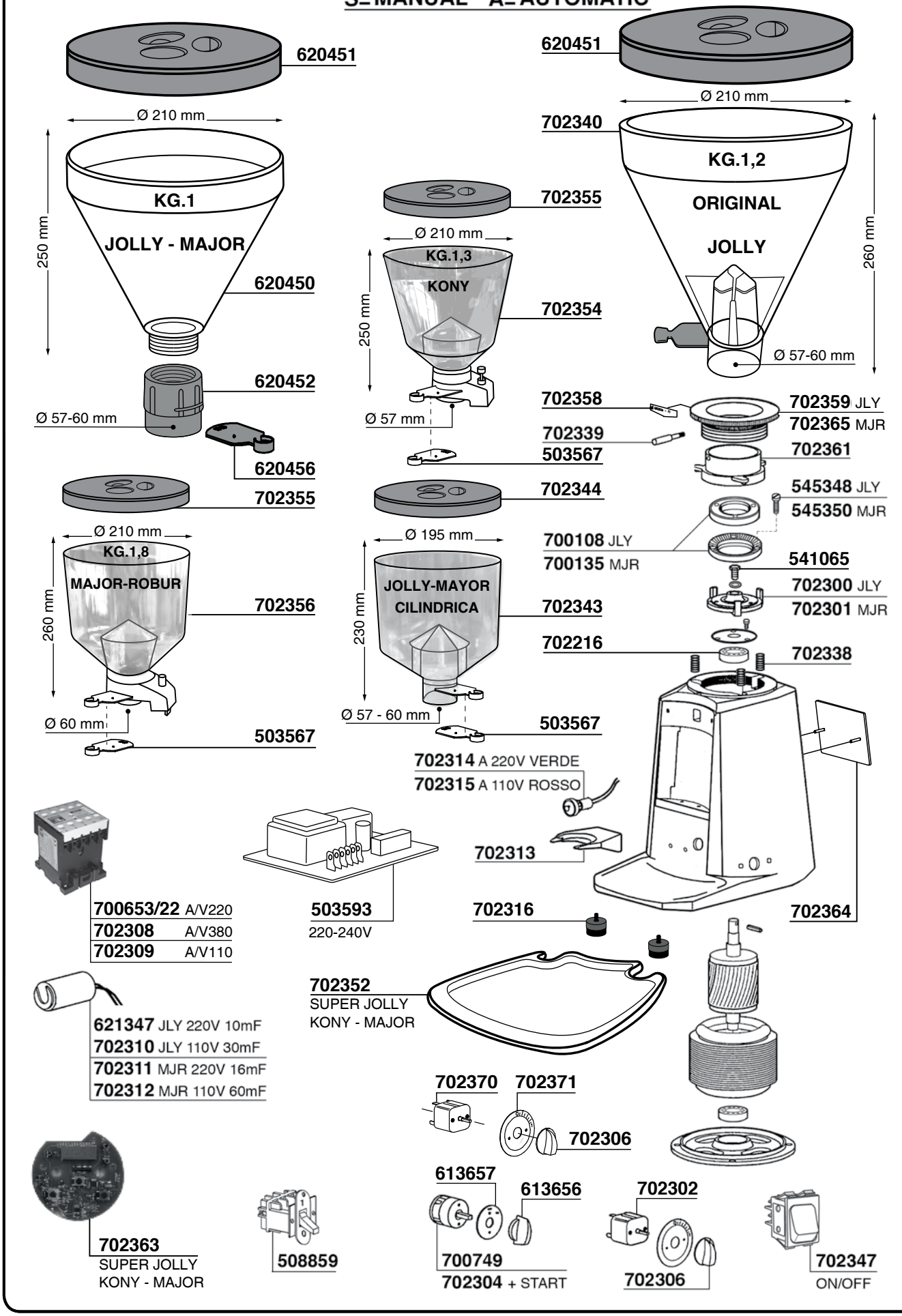

MACINACAFFE'

MAZZER MODEL: MINI

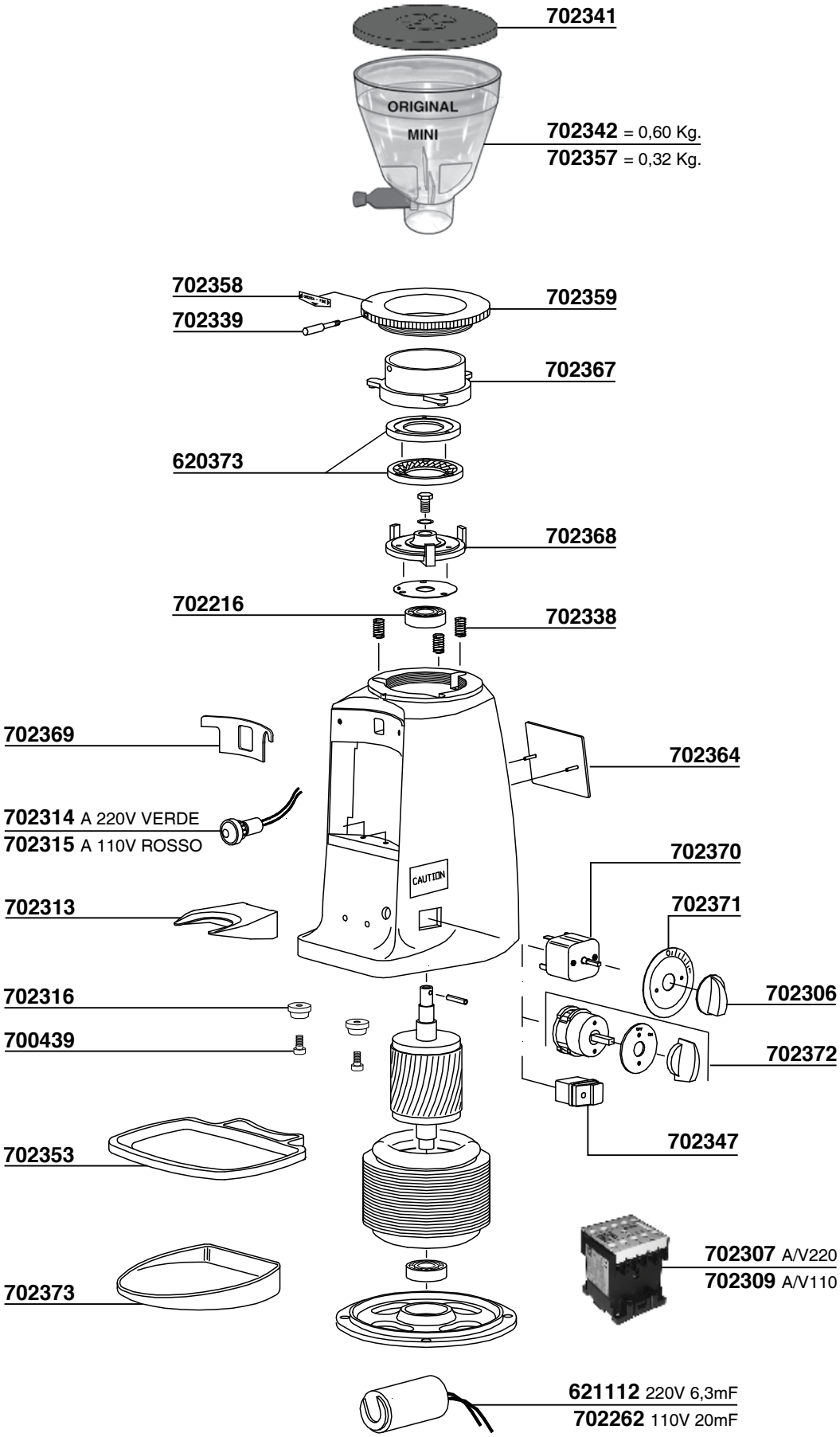

MAZZER MODEL: JOLLY-MAJOR-MINI

JLY=MODEL JOLLY MJR=MODEL MAJOR
S=MANUAL A=AUTOMATIC

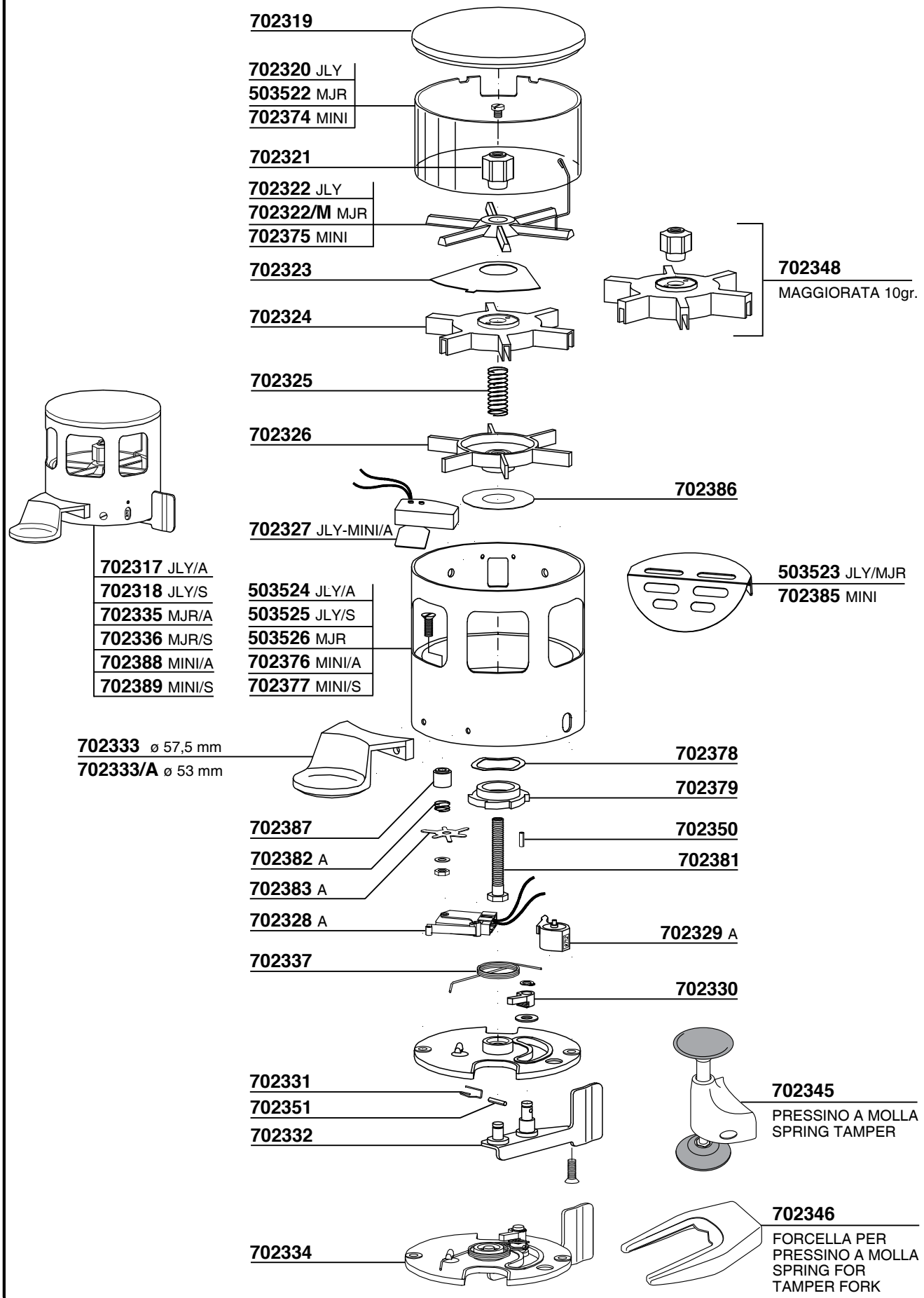

MAZZER MODEL:MINI ELETRONICO A-B

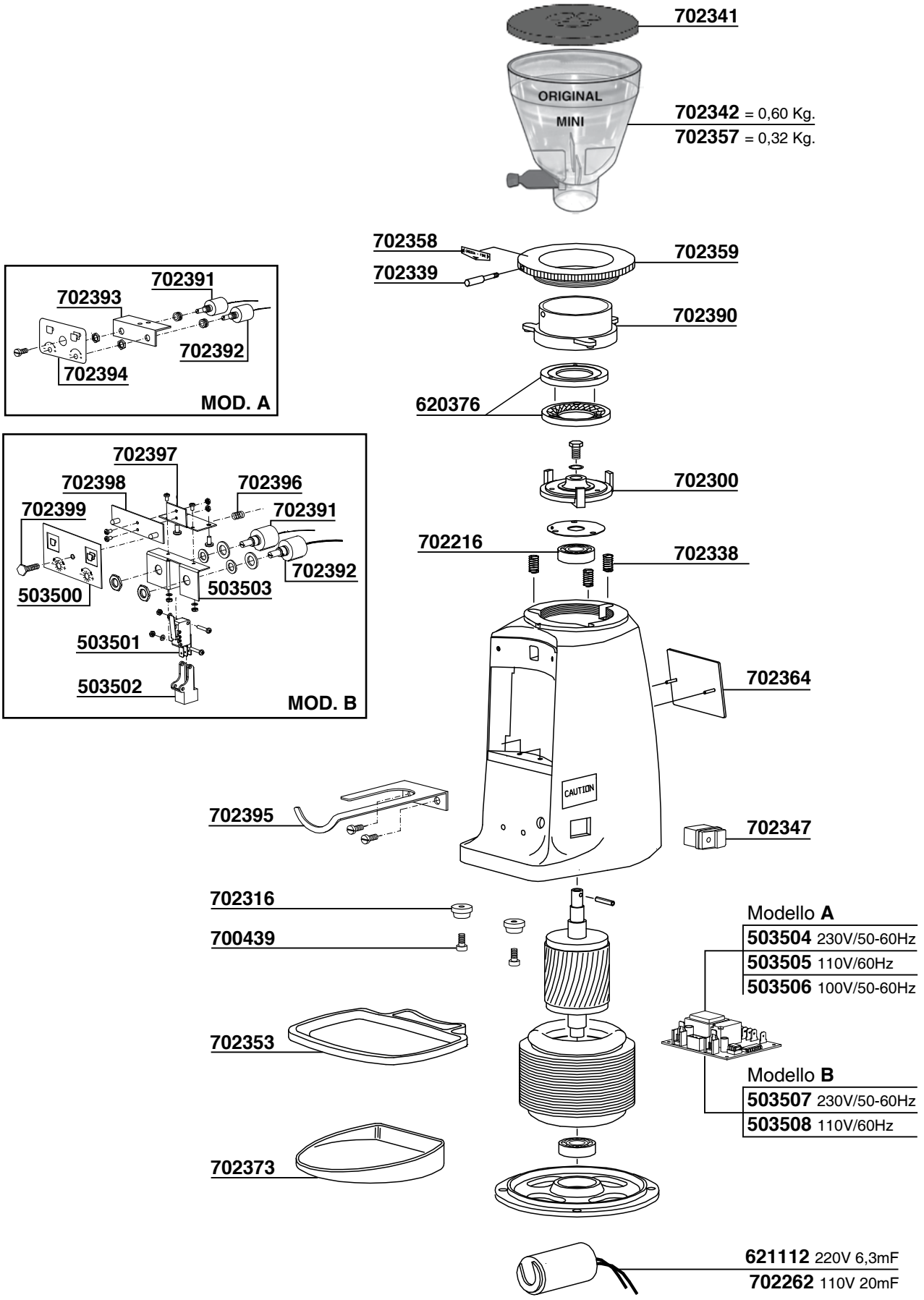

MACINACAFFE'

MAZZER MODEL:MINI ELETRONICO A-B

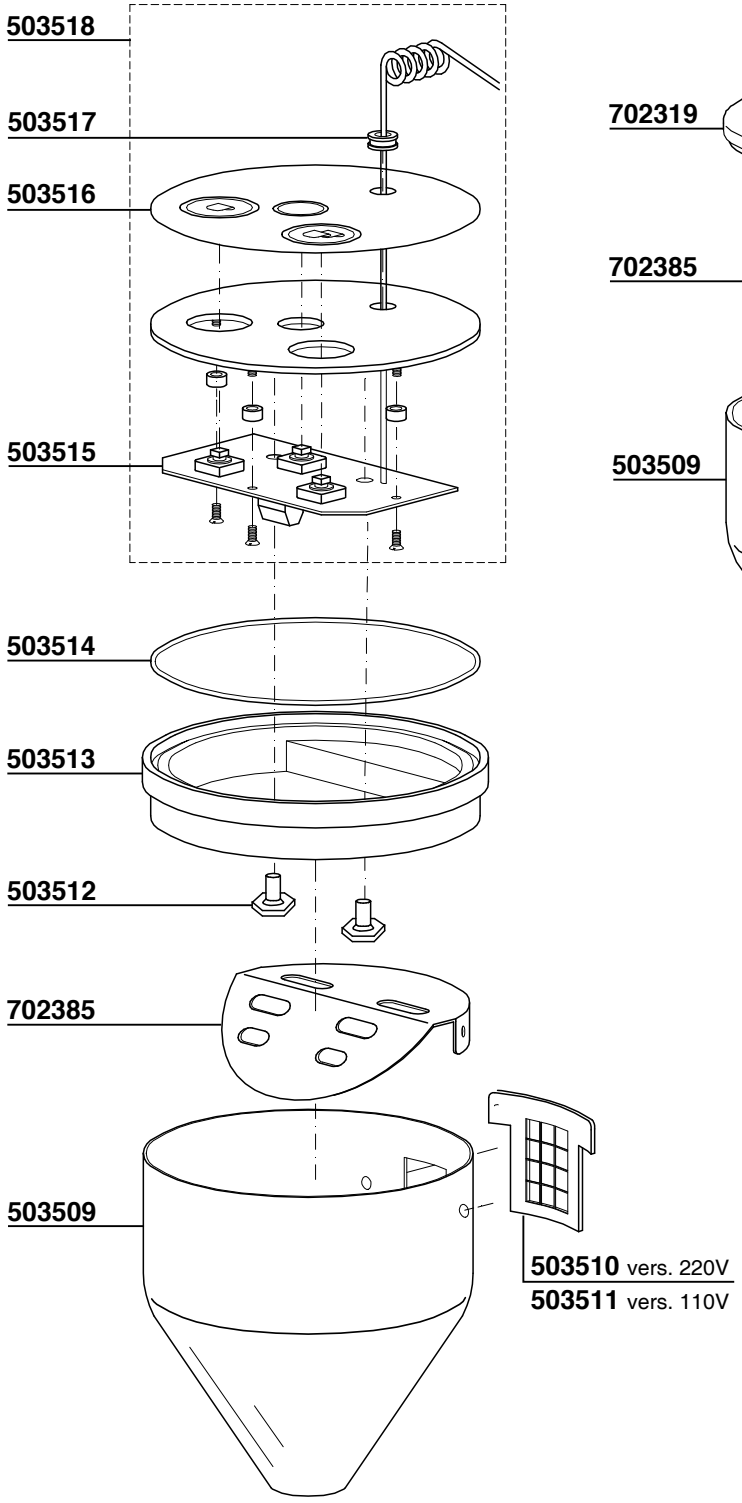

MOD. A

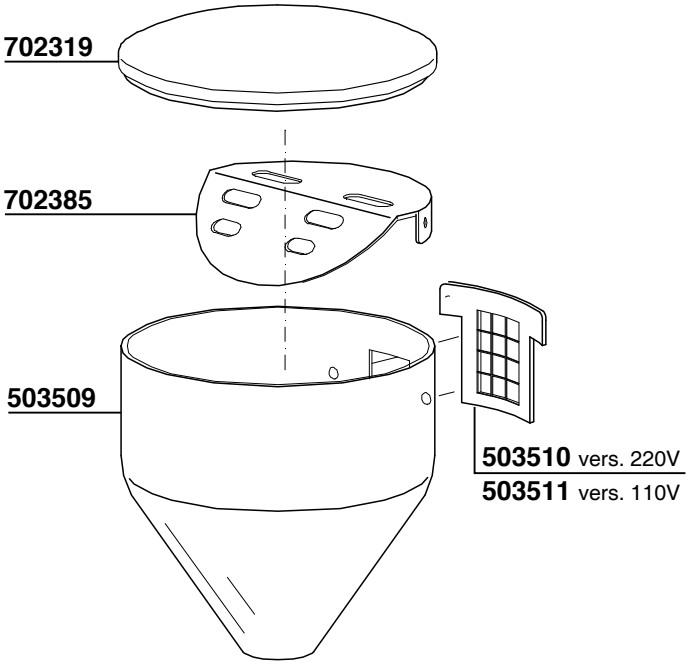

MOD. B

MACINACAFFE'

MAZZER MODEL: ROBUR DOSATORE

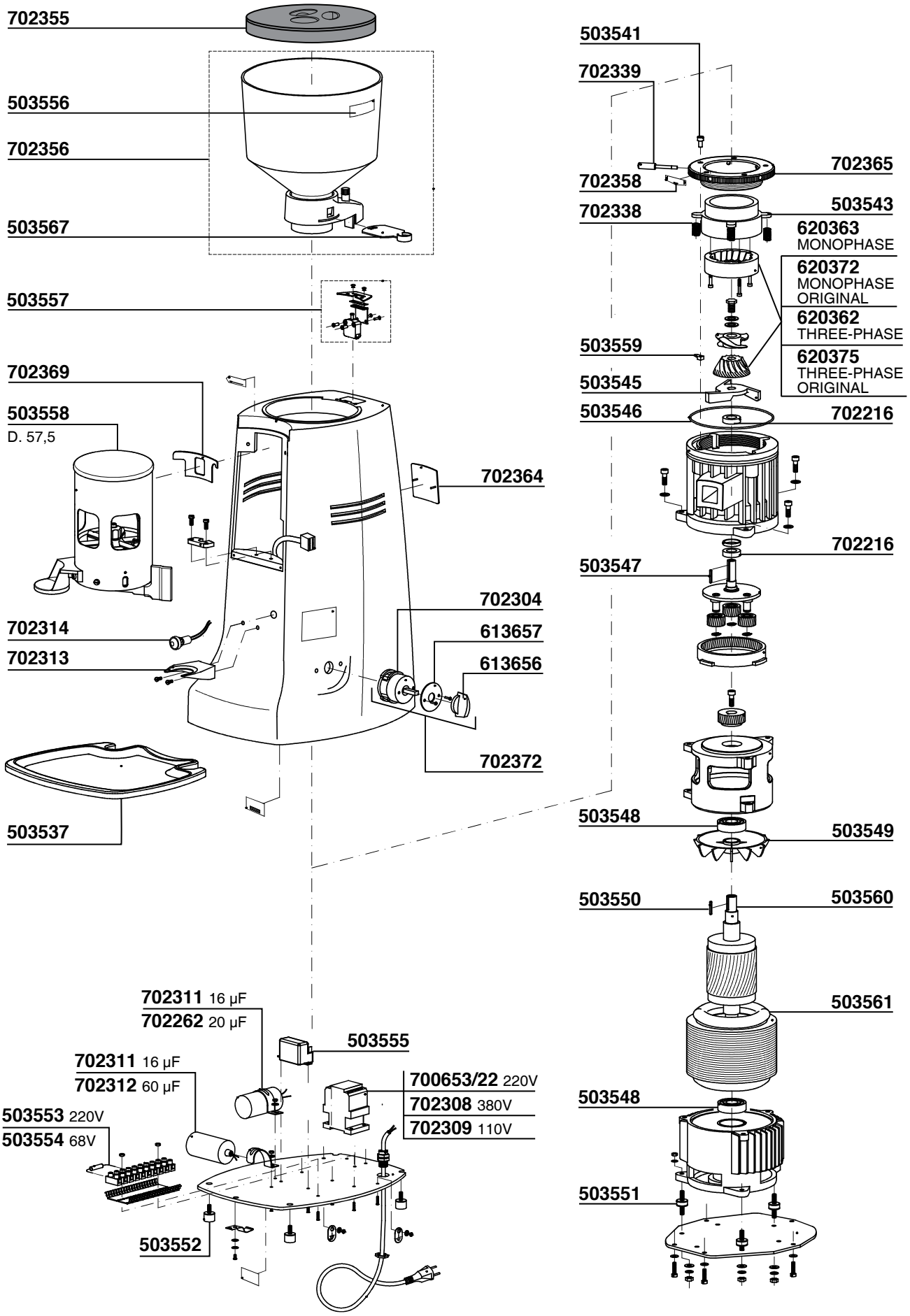

MACINACAFFE'

MAZZER MODEL: ROBUR DOSATORE

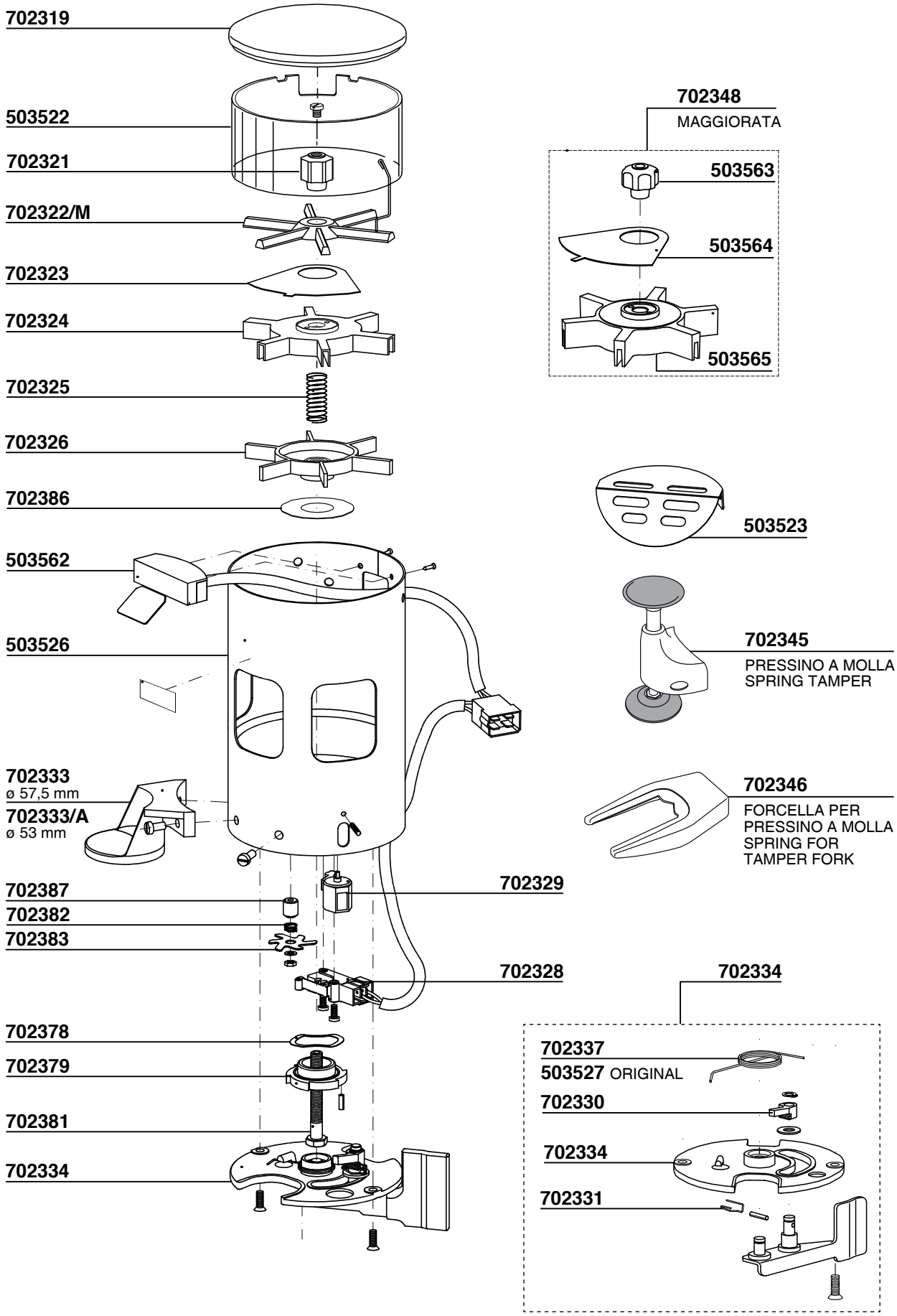

MACINACAFFE'

MAZZER MODEL: ROBUR ELETTRONICO

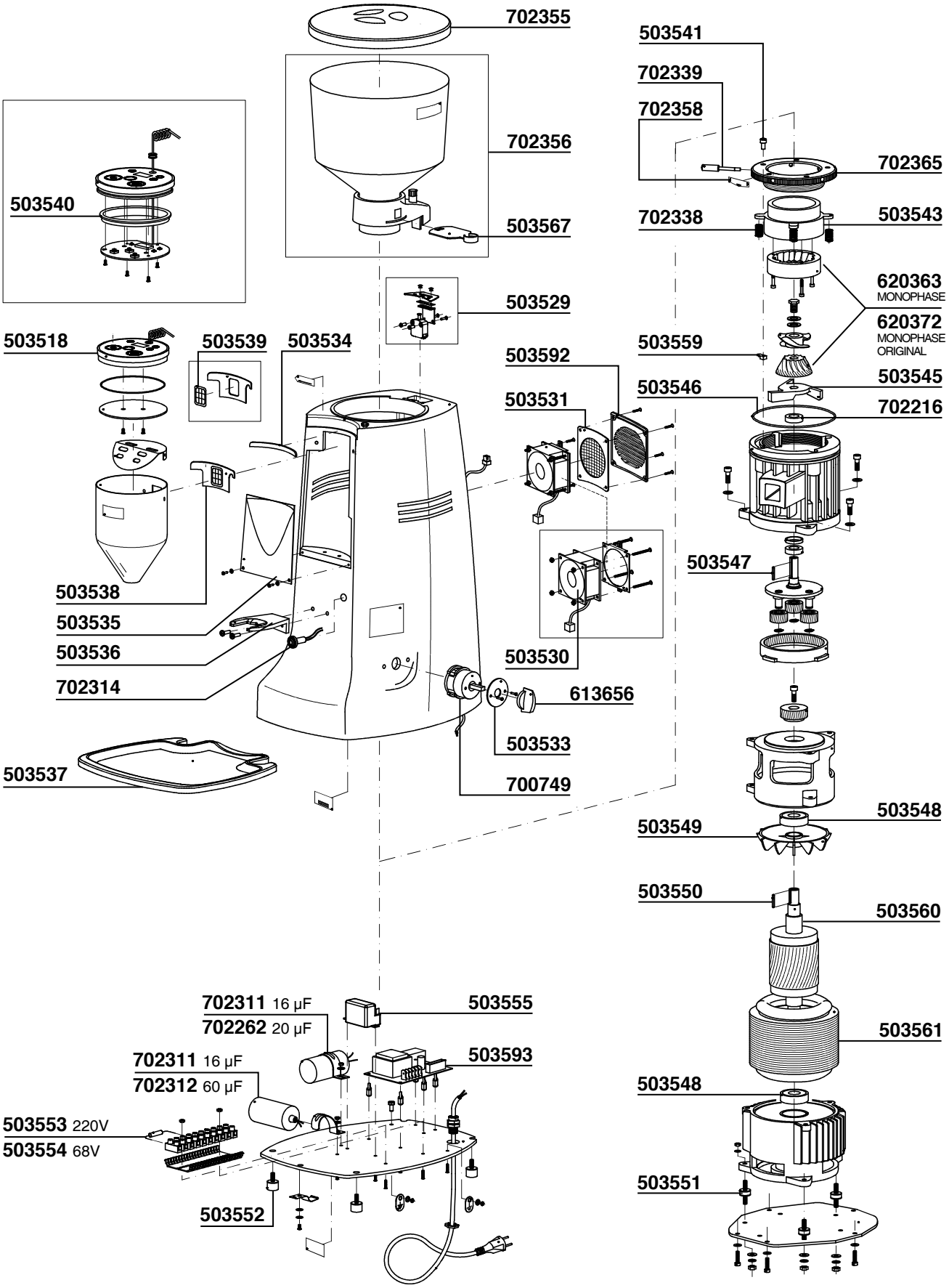

MACINACAFFE'

NUOVA SIMONELLI MODEL: GRINTA AMM-AMMT

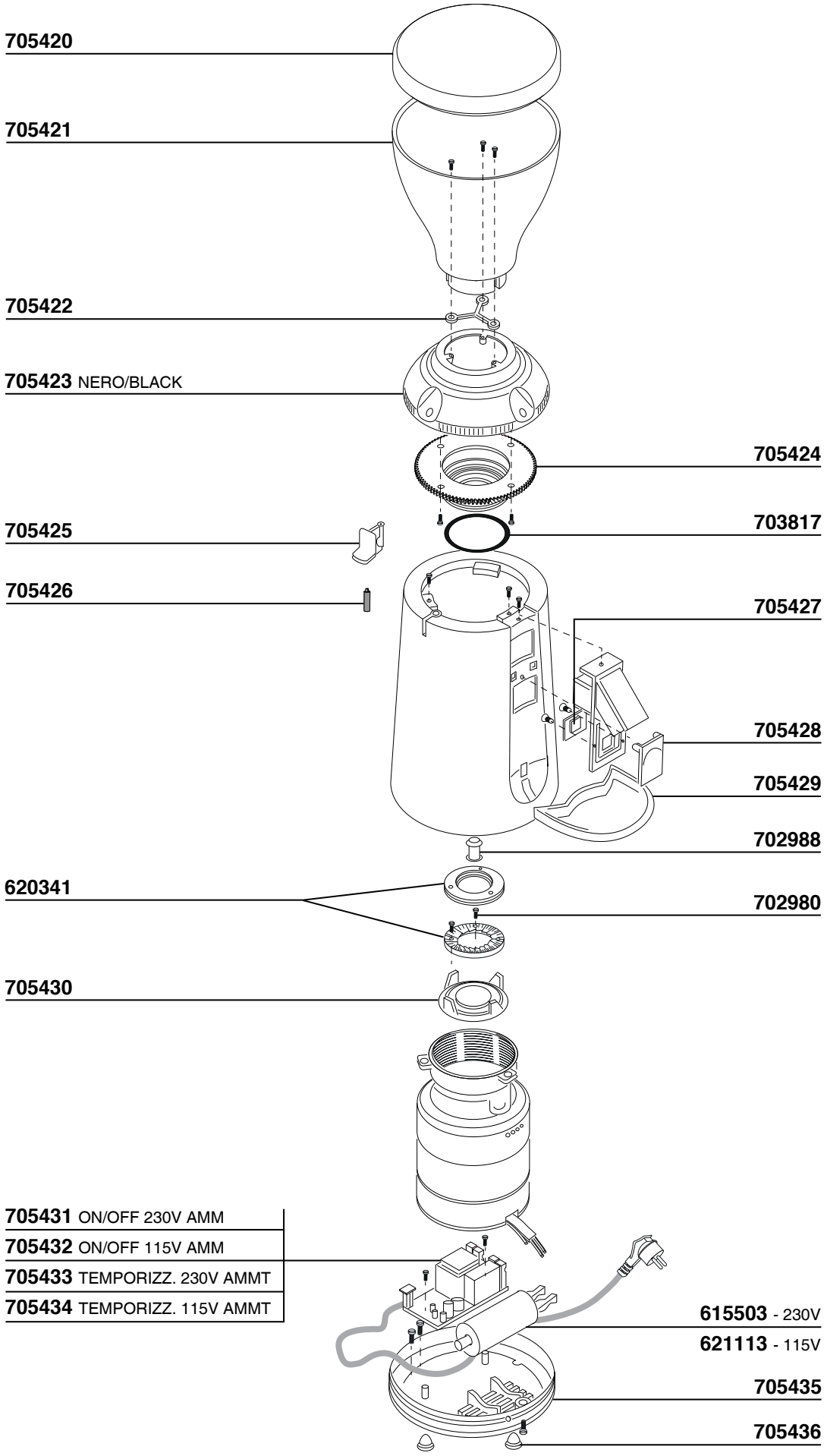

MACINACAFFE'

NUOVA SIMONELLI MODEL: MYTHOS ONE

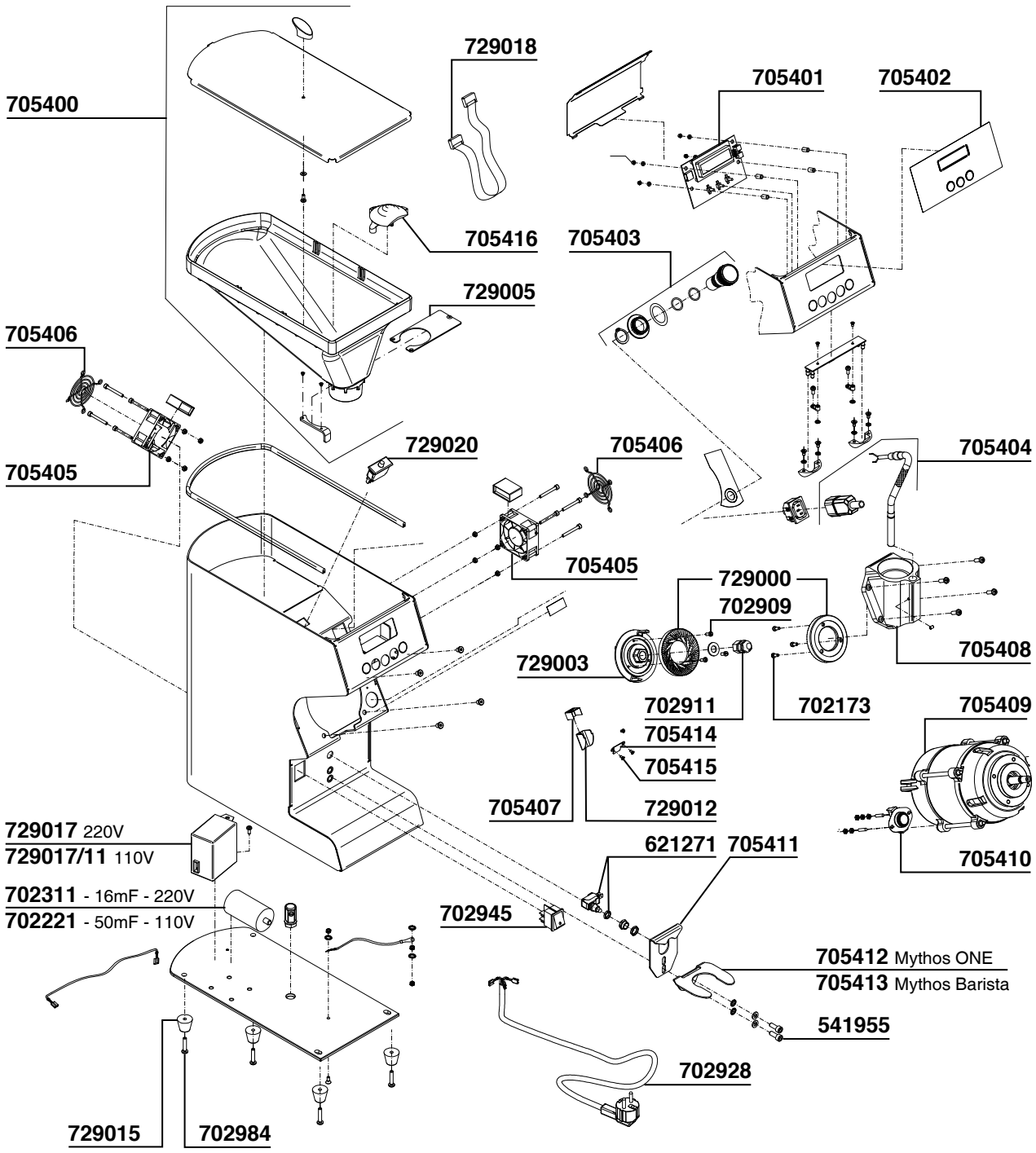

MACINACAFFE'

OBEL MODEL:DSQ - NR1400 - NR900

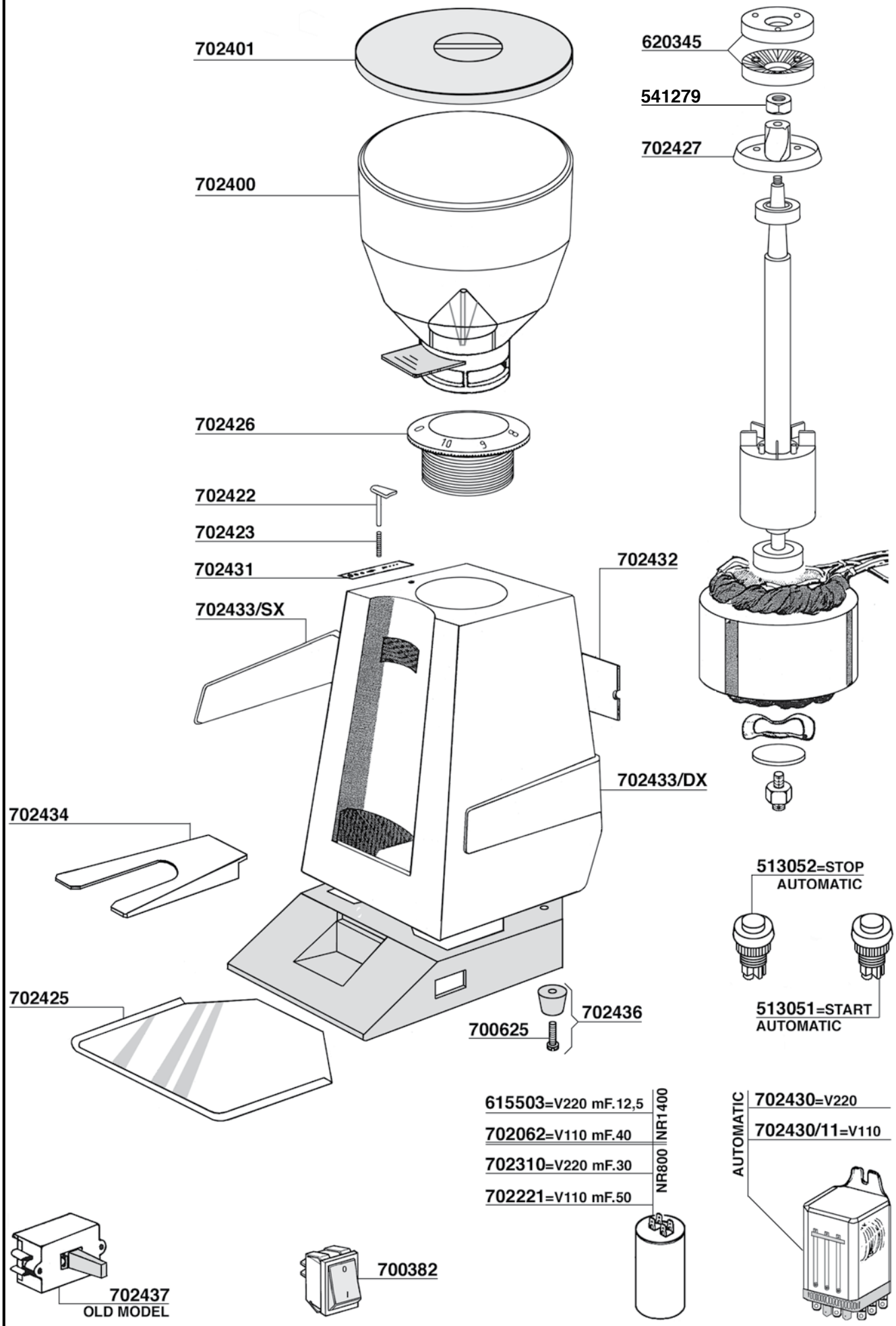

MACINACAFFE'

OBEL MODEL: EB

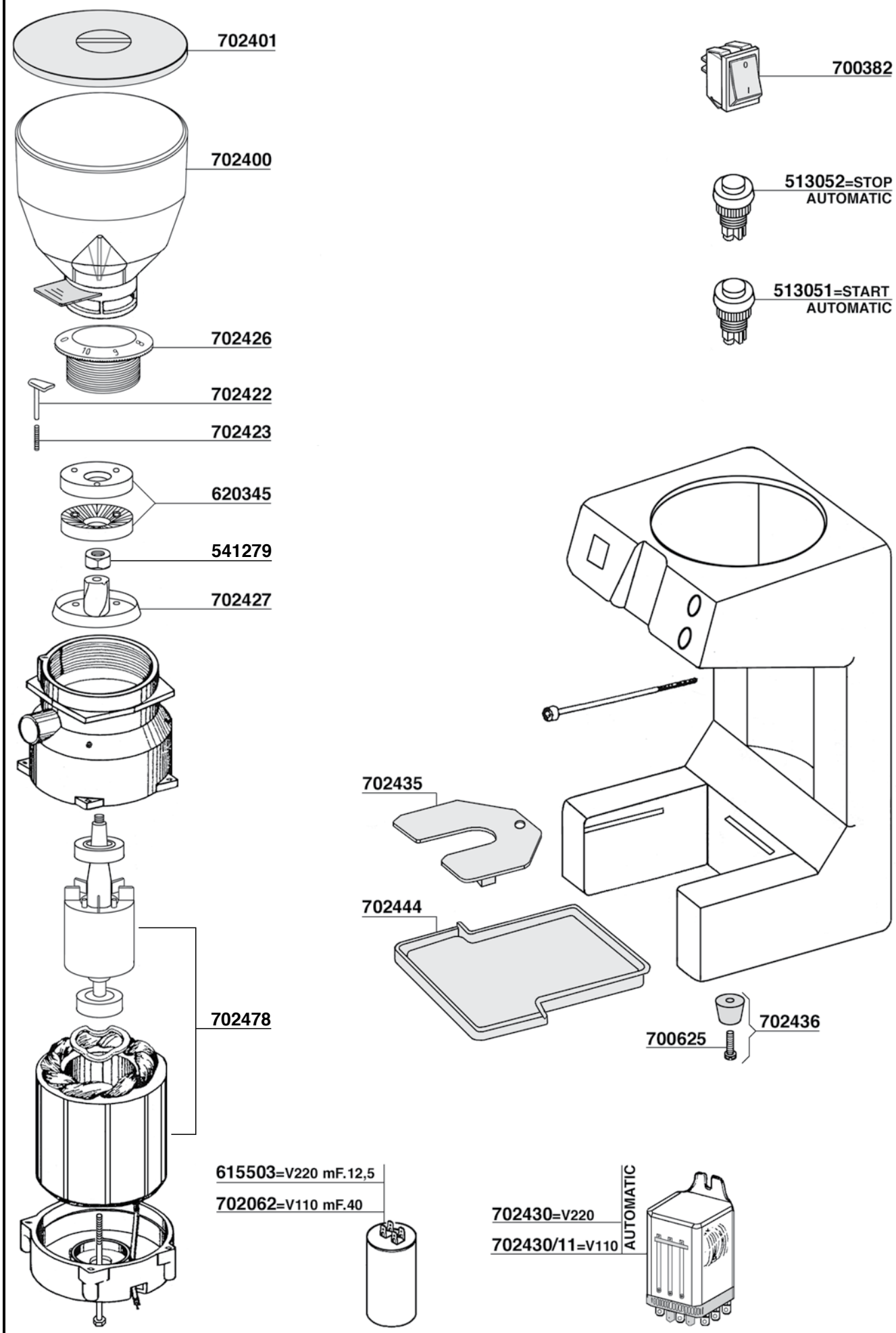

MACINACAFFE'

OBEL MODEL: DSQ-EB-NR1400-NR900-MITO

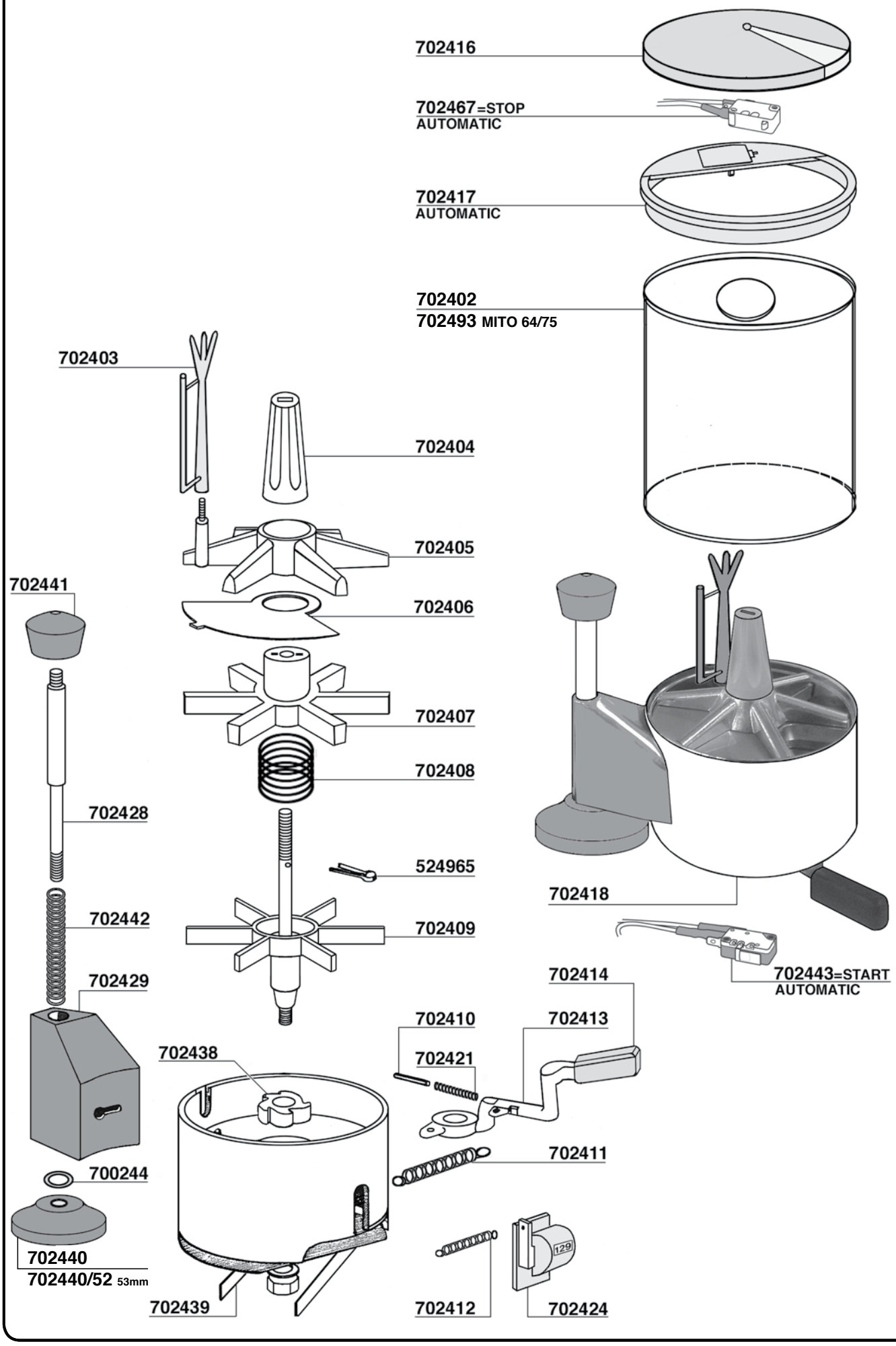

NUOVA RICAMBI MACINACAFFE' Tav. 47

OBEL MODEL:JUNIOR - ROMA

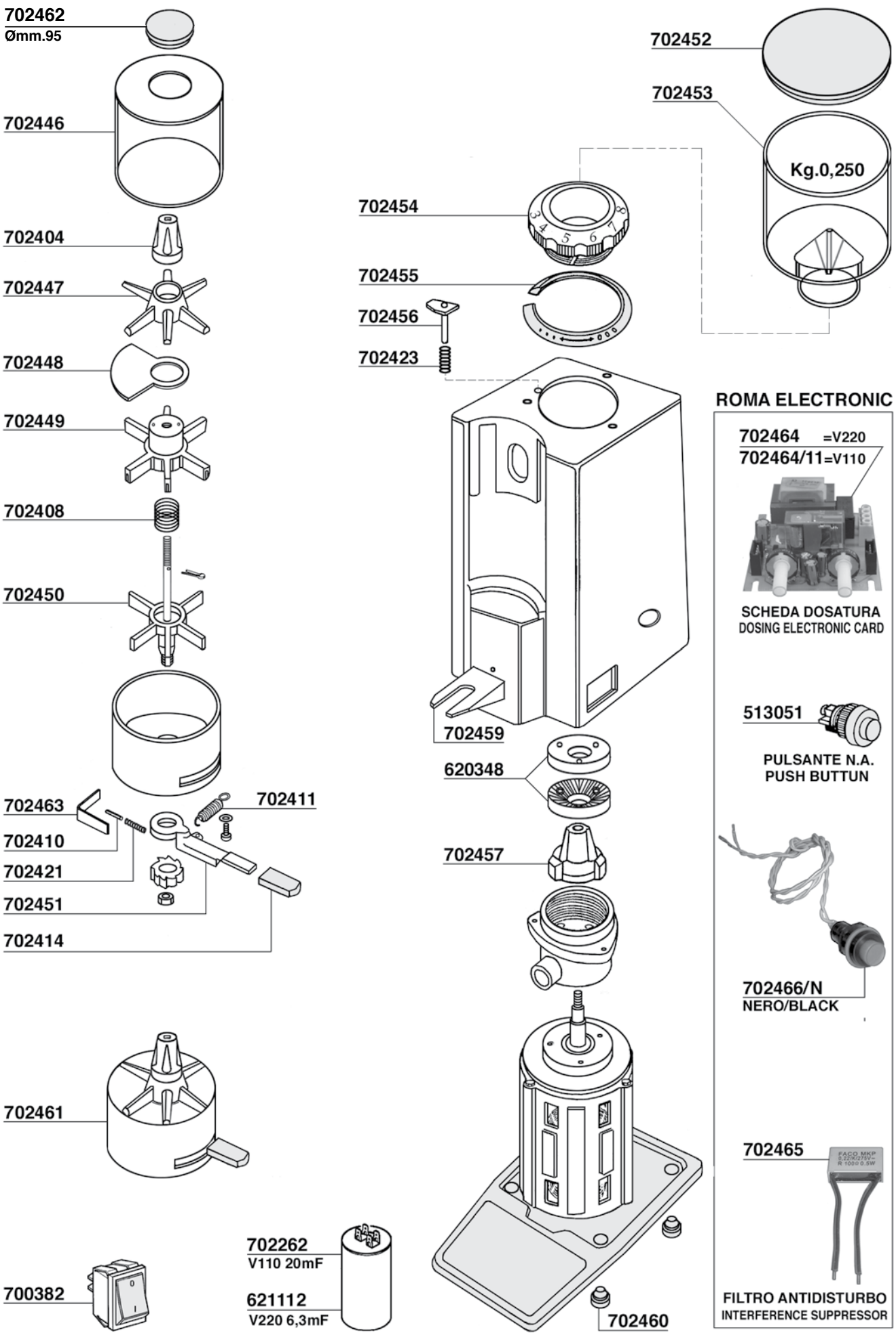

MACINACAFFE'

OBEL MODEL: MITO ATR – MITO ON DEMAND

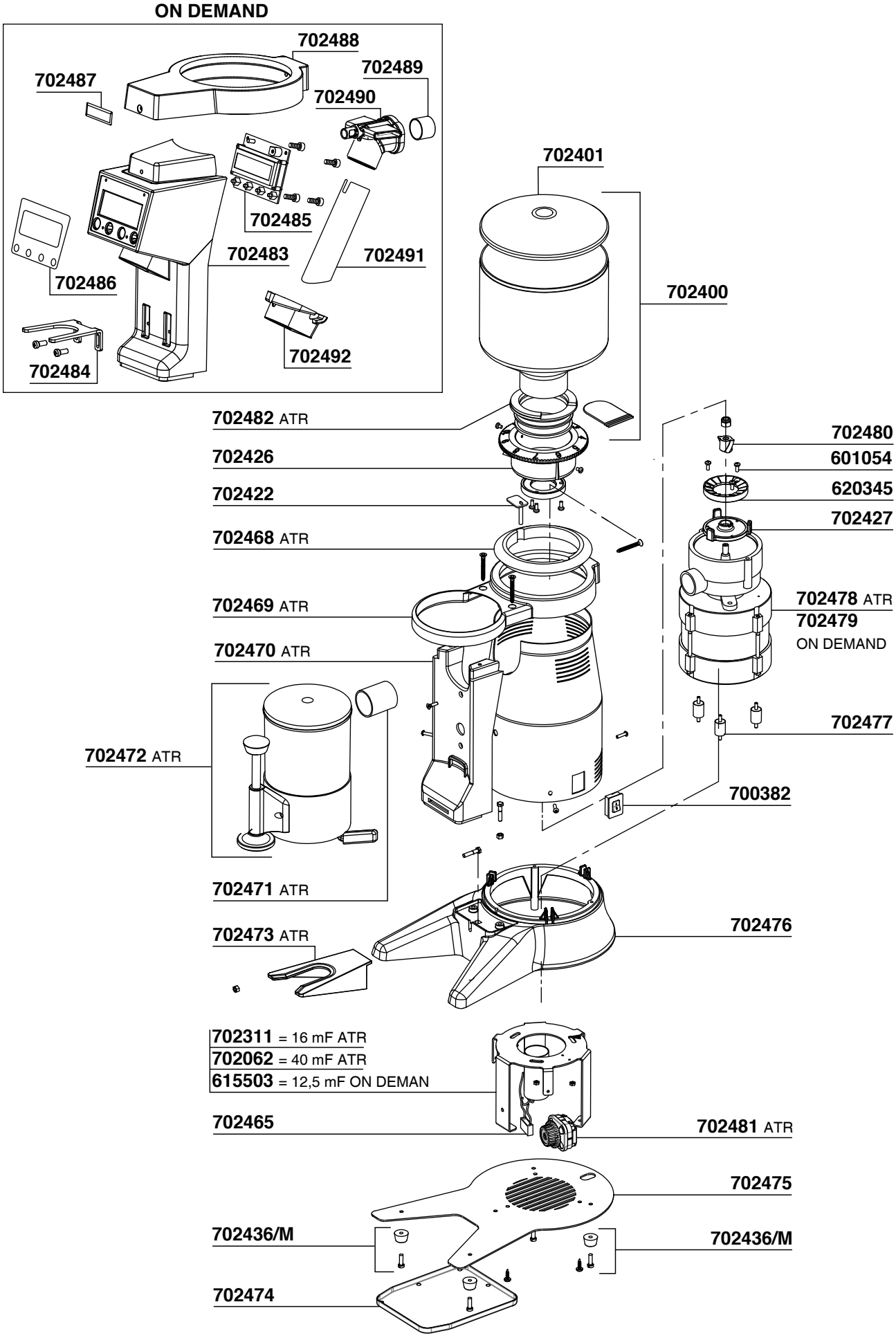

MACINACAFFE'

QUAMAR MODEL: T.80A - T.80E

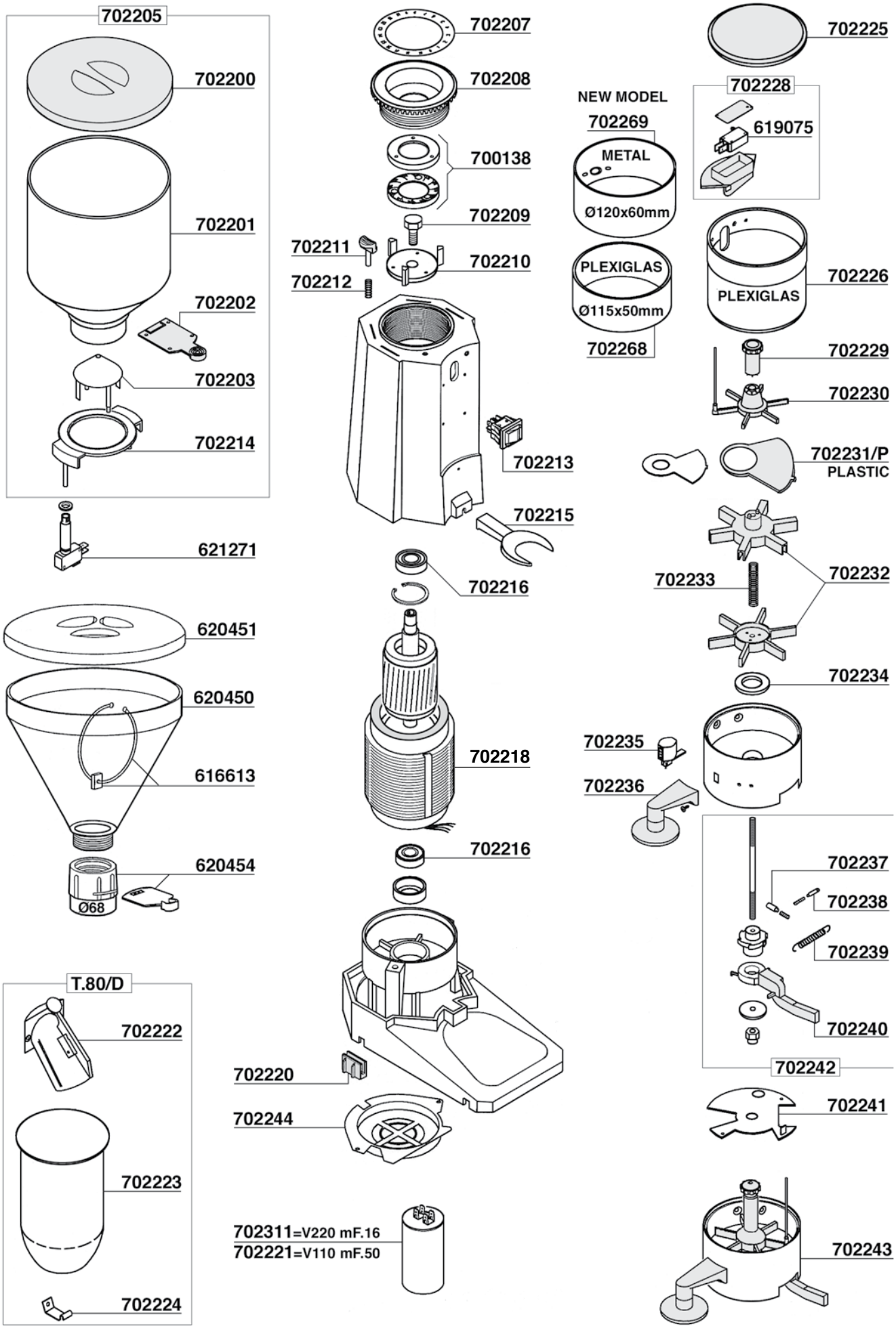

MACINACAFFE'

QUAMAR MODEL: T.48A

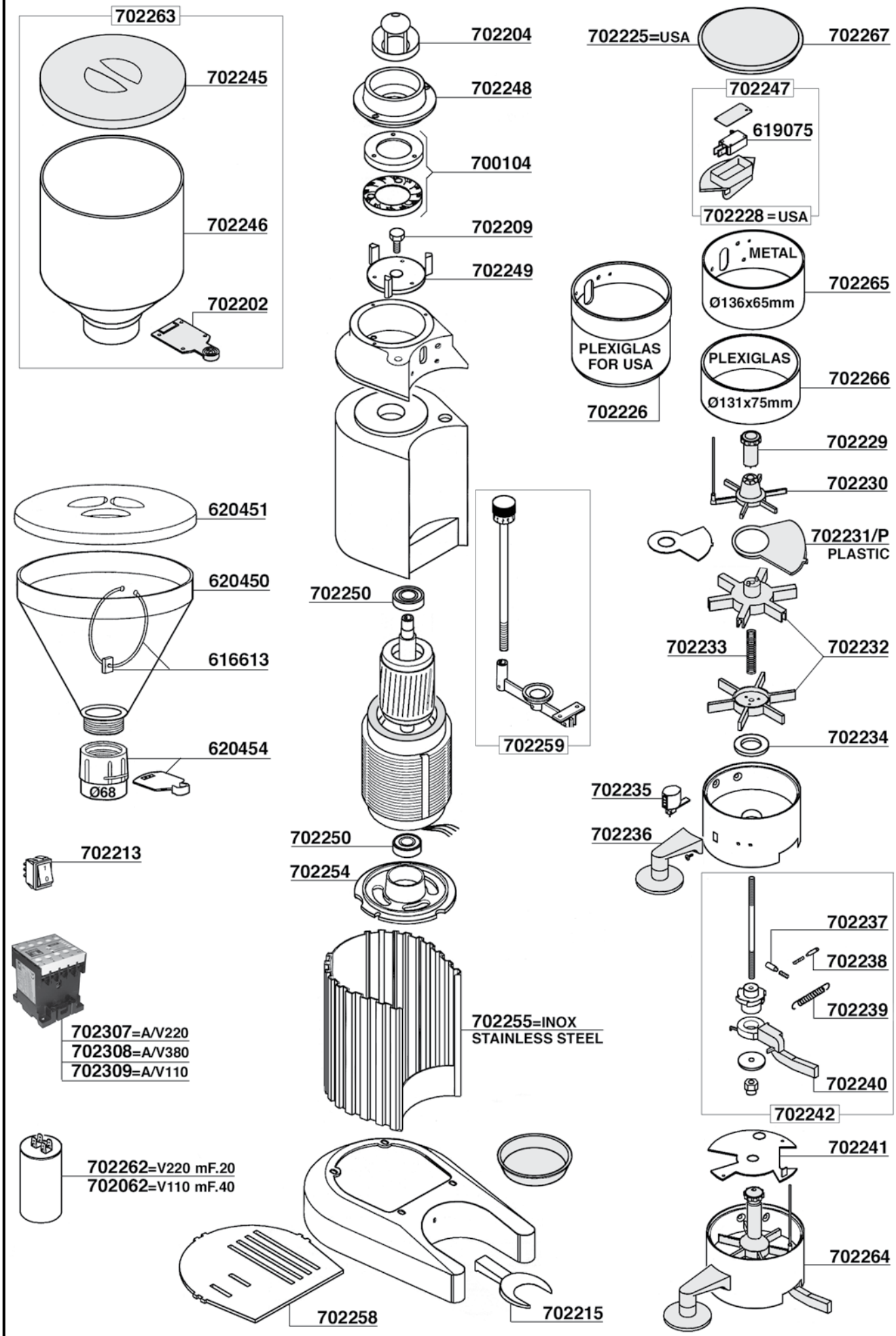

MACINACAFFE'

QUAMAR MODEL: M80 AUT.-MAN.-TEMPORIZZATO

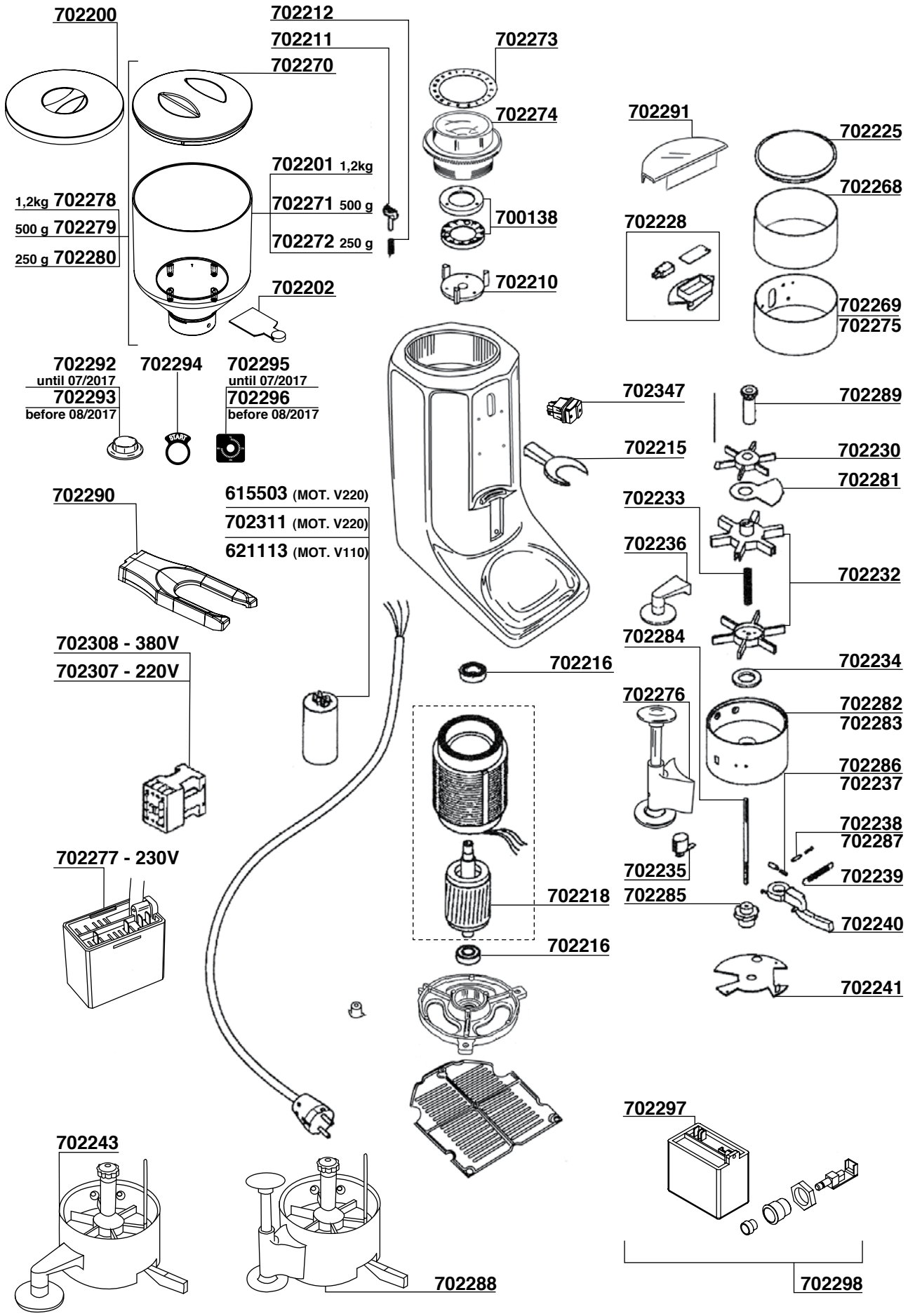

MACINACAFFE'

QUAMAR MODEL: M80/E

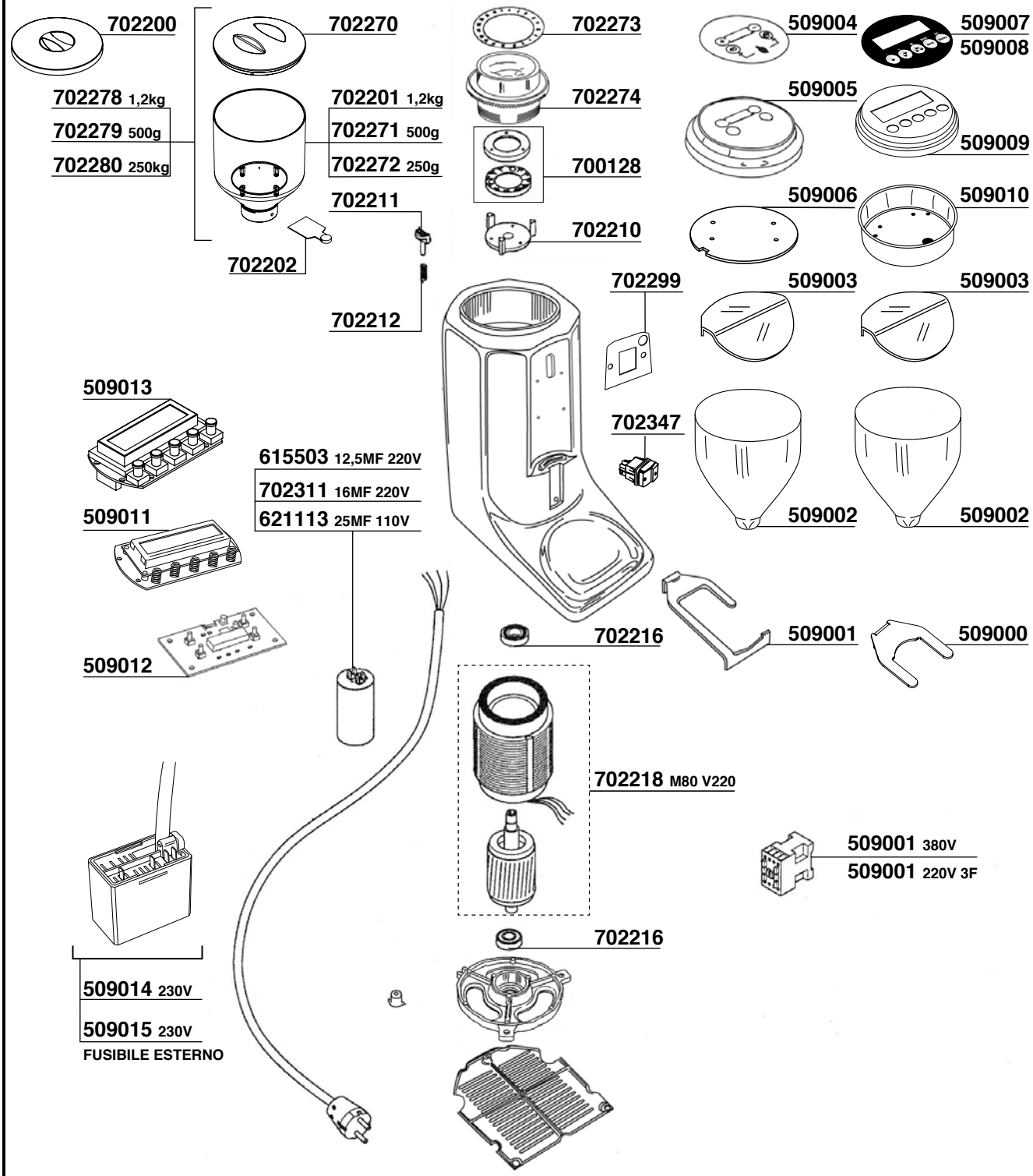

MACINACAFFE'

RANCILIO : KRIO 65 AT - ST

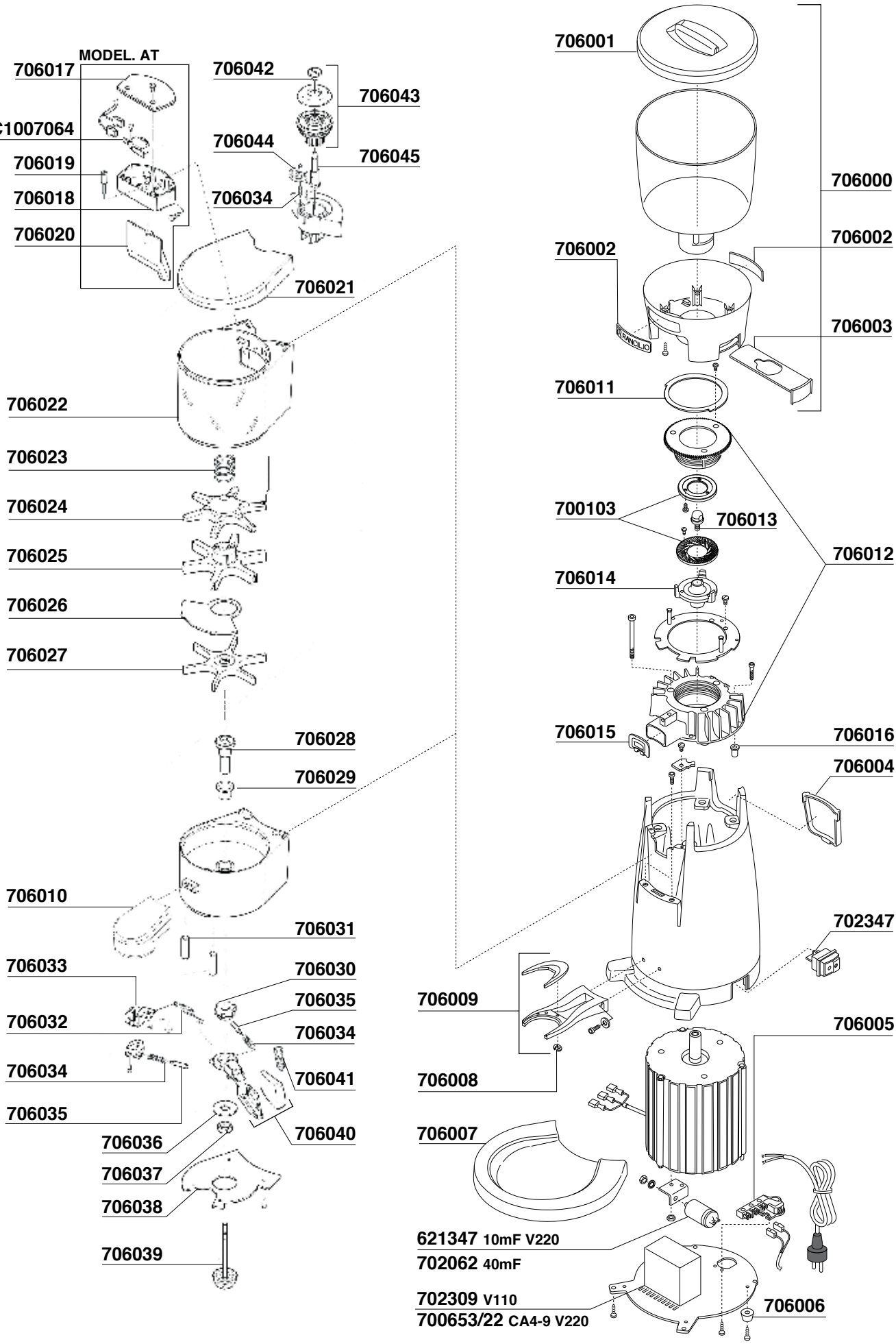

MACINACAFFE'

RANCILIO : KRIO 65 OnDemand

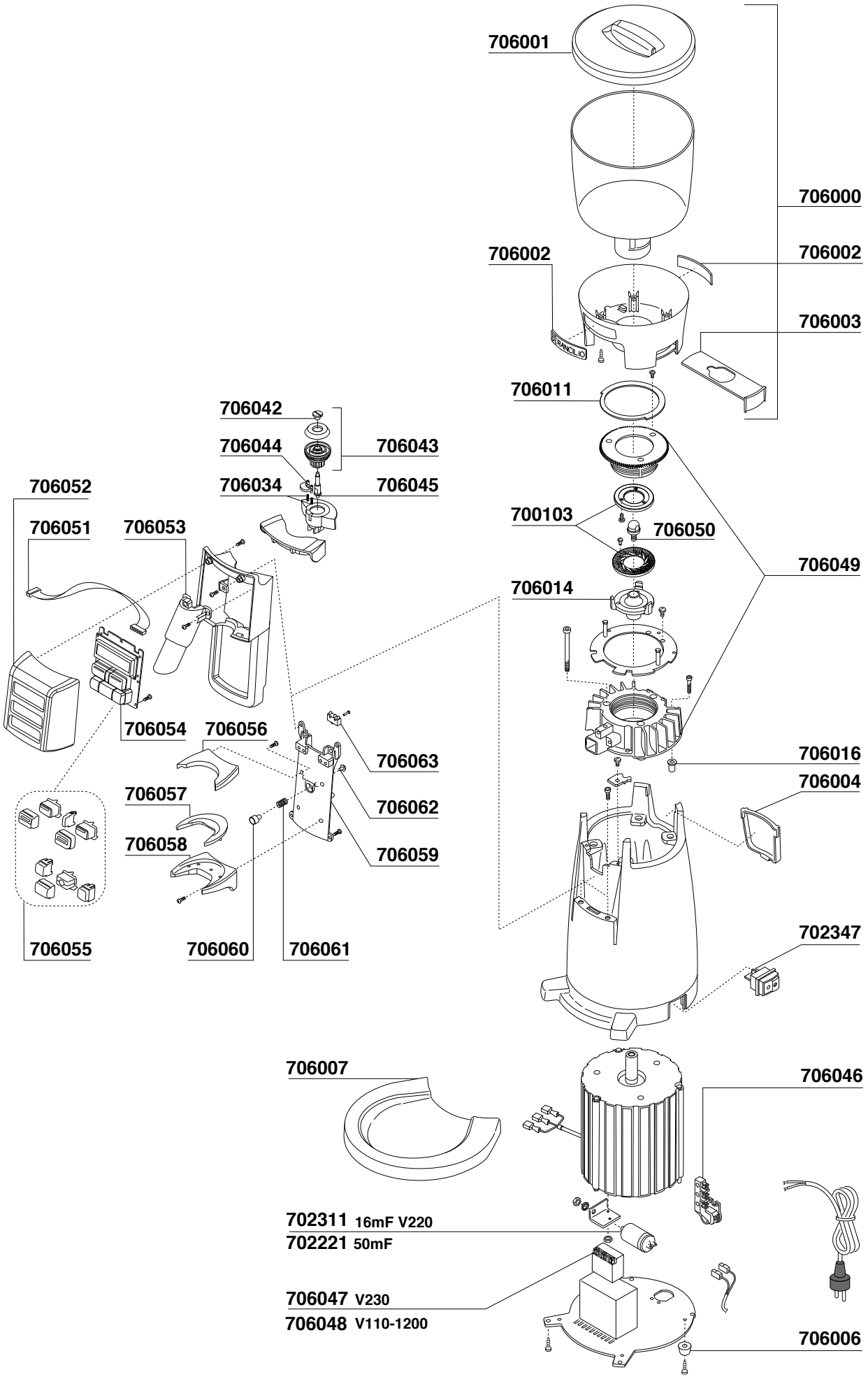

MACINACAFFE'

ROSSI MODEL: RR45 - CC45

S=MODEL MANUAL A=MODEL AUTOMATIC

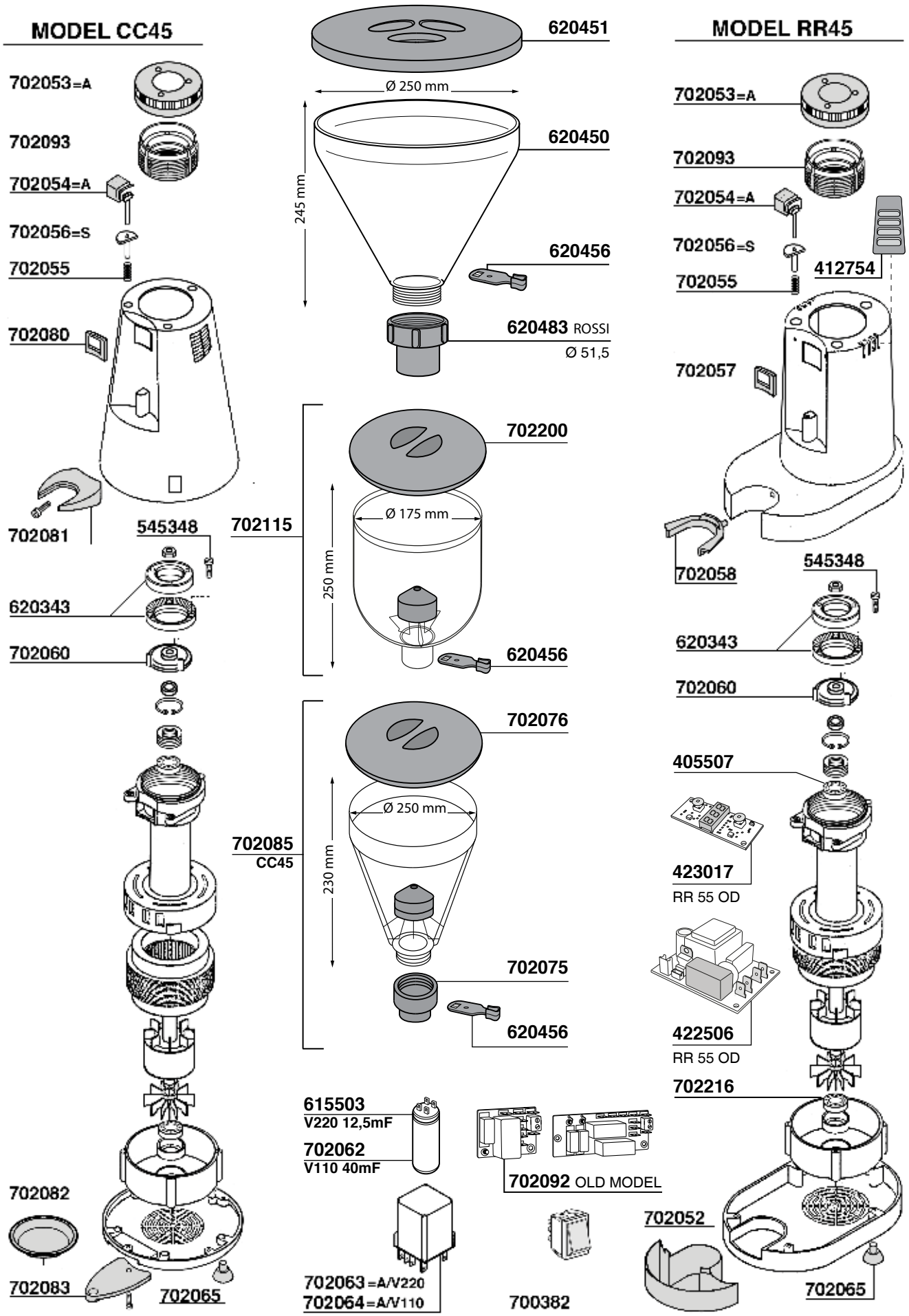

MACINACAFFE'

ROSSI MODEL: RR45 - CC45

S=MODEL MANUAL A=MODEL AUTOMATIC

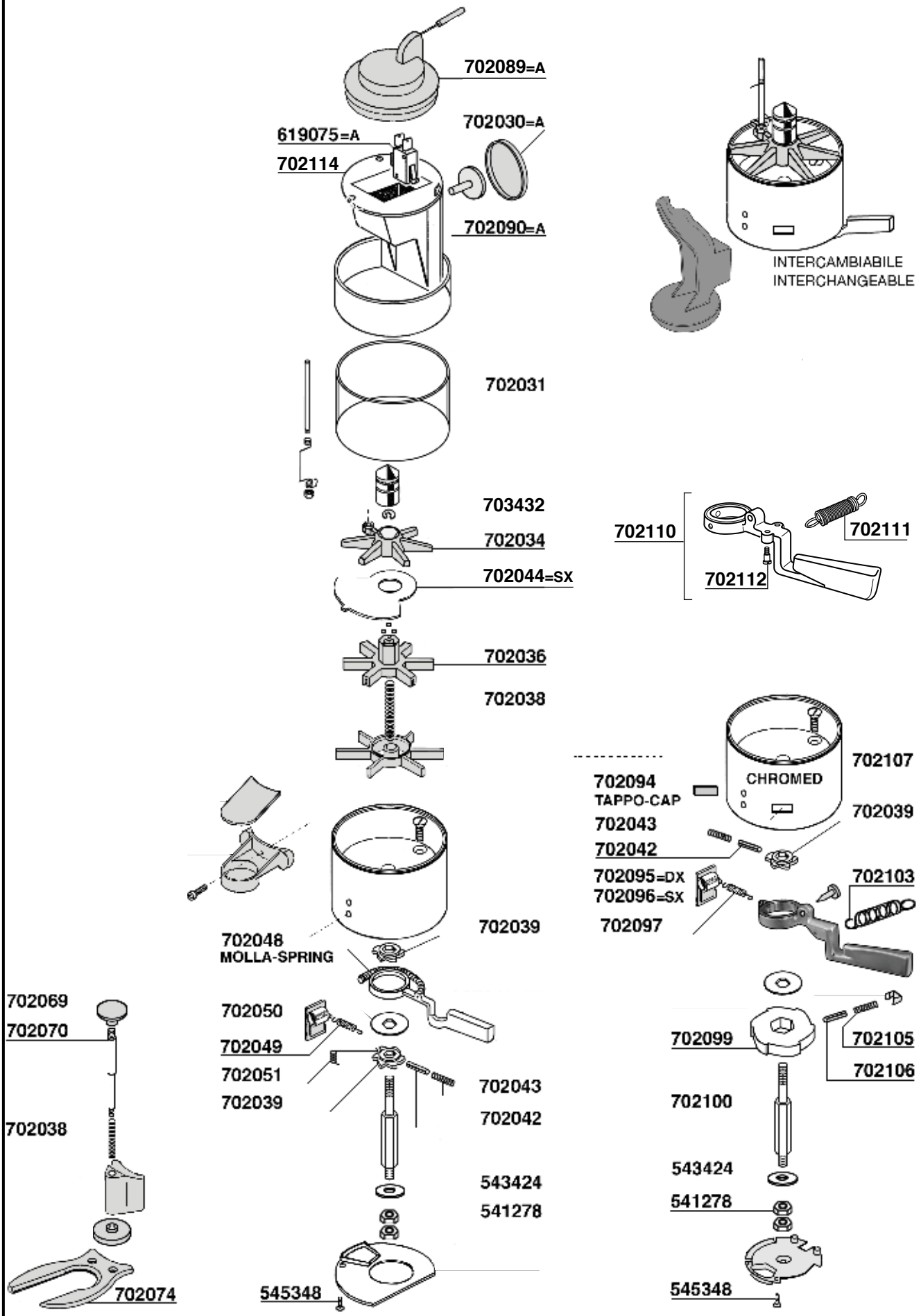

MACINACAFFE' LUX - DELUX

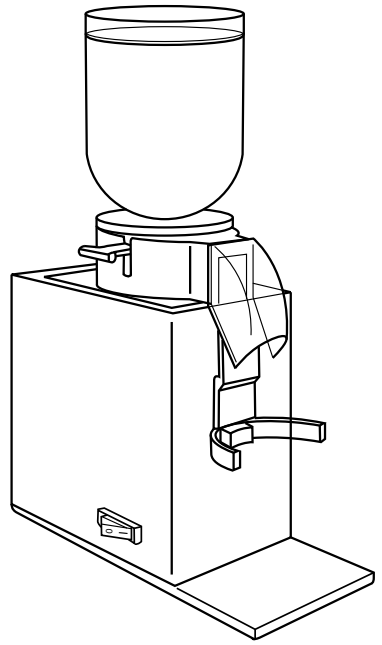

702503 - LUX
MACINACAFFE' COMPLETO

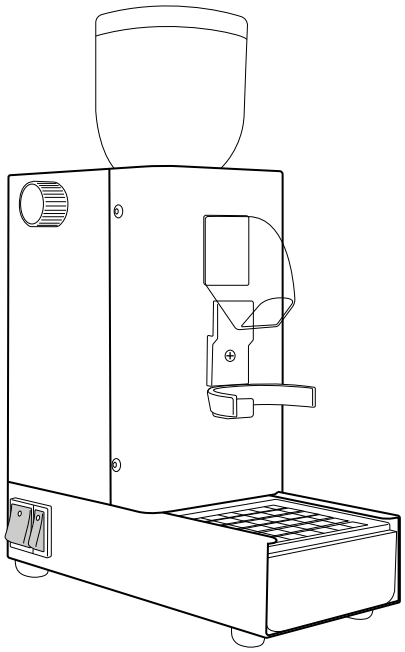

702508 - DELUX
MACINACAFFE' COMPLETO

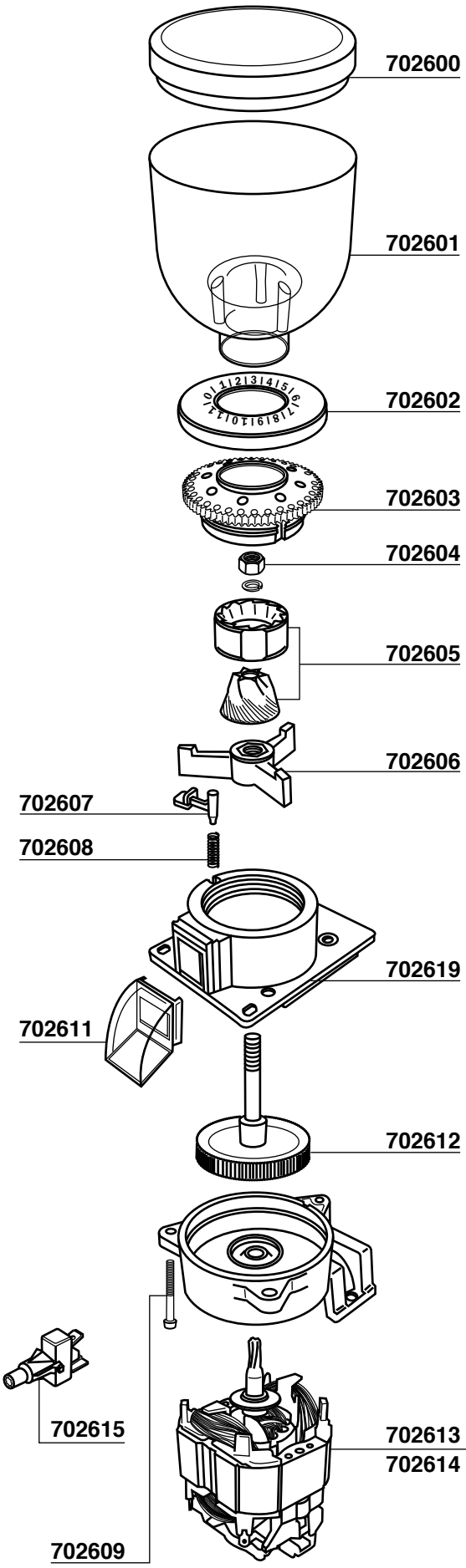

ADATTATORI CAMPANE Tav. 58

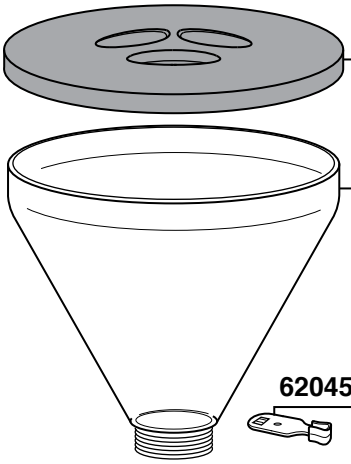

620452 MAZZER
Ø 57-60

620449 OBEL
Ø 65,5

620453 FAEMA
Ø 55

620481 S.MARCO
Ø 67

620454 FIORENZATO
Ø 68 FIORENZATO MC
MACAP

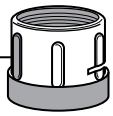

620482 GAGGIA
Ø 63

620455 FAEMA SILVER-CIMBALI
Ø 54

620483 ROSSI
Ø 51,5

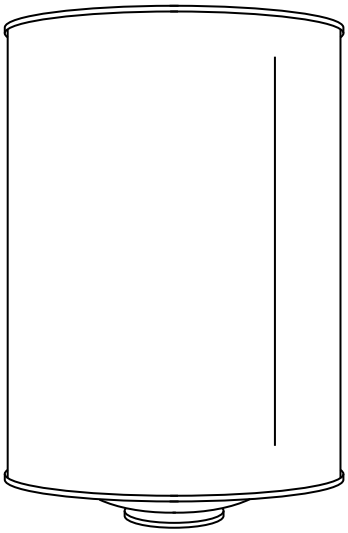

620484
mod. Vulcano per Illy

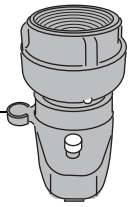

620457
x bocchettone Rossi
Ø sup. 70 mm
Ø foro passante 50 mm

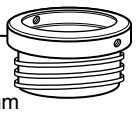

620461

702075 Ø 51
702075/C Ø 47

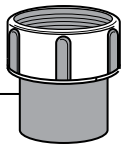

620456

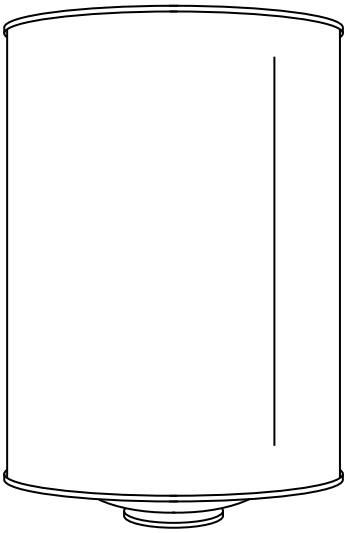

620459

620458
x bocchettone plastica
Ø sup. 70 mm
Ø foro passante 39,9 mm

620461

620460
x campane filett.
tipo Illy

620456

620456

ADATTATORI PER CAMPANA ILLY Tav. 59

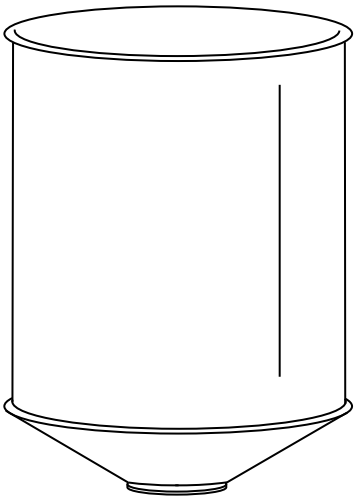

620456

620460
x campane filett.
tipo Illy

620452 MAZZER
Ø 57-60

620449 OBEL
Ø 65,5

620453 FAEMA
Ø 55

620481 S.MARCO
Ø 67

620454 FIORENZATO
Ø 68 FIORENZATO MC
MACAP

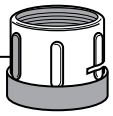

620482 GAGGIA
Ø 63

620455 FAEMA SILVER-CIMBALI
Ø 54

620483 ROSSI
Ø 51,5

CODICE *code*	MACINACAFFE' *coffee grinder*	ROTAZIONE *rotation*	Ø *out*	Ø *in*	SPESSORE *thickness*	FORI *holes*
702725	**ANFIM**	SX	50	30	7,5	3
700130	**ANFIM**	SX	54	32	8	3
700131	**ANFIM**	SX	64	36	9	3
700131/T	**ANFIM TITANIO**	SX	64	36	9	3
620351	**ANFIM - MACAF - OBEL GLOBO**	SX	75	43	9	3
620351/T	**ANFIM RIV. TITANIO**	SX	75	43	9	3
700136	**ANFIM 450 RPM**	SX	75	42	10	3
702605	**LUX-DELUX**	DX	38/30	7,2	17	-
700103	**AURORA**	SX	64	38	9	3
620340	**BRASILIA**	SX	50	31	8,5	3
620343	**BRASILIA**	SX	64	38	9	3
620342	**BRASILIA**	SX	83	45	10	3
700134	**CASADIO**	SX	64	35	10	2
700105	**CASADIO**	SX	84	45	10,5	3
620344	**CASADIO CONICHE**	DX	68	13c	25	4
620324	**CASADIO ENEA**	DX	63,5	38	9	3
620312	**CASADIO THEO**	DX	64	38	9	3
620313	**CASADIO THEO**	DX	84	45	9	3
620314	**CASADIO CONICHE THEO**	DX	68/49	11	25	4
700106	**CIMBALI**	DX	54	32	9	3
700102	**CIMBALI-DRM-6S (sesta serie)**	DX	64	37	9	3
700172	**CIMBALI-DRM PIANA (x coniche)**	DX	68	43	7,5	3
700111	**CIMBALI MAGNUM ON DEMAND**	DX	63,5	38	9	3
620366	**CUNIL MG19**	SX	59	30	9	3
620367	**CUNIL MG21**	SX	59	33/30	9	3/0
620352	**EROS CONICHE**	DX	68	13	25	-
620341	**EUREKA**	DX	50	30	7,5	3
620302	**EUREKA**	DX	65	38	9	3
620322	**EUREKA TRIFASE**	DX	65	38	9	3
620303	**EUREKA**	DX	60	38	9	3
620344	**EUREKA CONICHE**	DX	68	13c	25	4

CODICE *code*	MACINACAFFE' *coffee grinder*	ROTAZIONE *rotation*	Ø *out*	Ø *in*	SPESSORE *thickness*	FORI *holes*
620349	**EUREKA**	DX	74	38	9	3
729000	**EUREKA MYTHOS TITANIO**	DX	75	38	9	3
508962	**FAEMA FP - FUTURMAT**	SX	54	31	8	3
616730	**FAEMA MP - MPN**	DX	54	31	8	3
508880	**FAEMA FM**	SX	62	38	9	3
619956	**FAEMA SILVER - BNZ**	DX	64	38	9	3
631470	**FAEMA MC CONICHE-BNZ-CIMBALI CONIK**	DX	68	11	25	4
633539	**FAEMA MD 2000-3000-MAGNUM**	DX	75	43	9	3
700138	**FIORENZATO - FIORENZATO DOGE**	DX	63	38	9	3
620354	**FIORENZATO**	SX	63	38	9	3
620364	**FIORENZATO DOGE CONICHE**	DX	71	13c	25	3
700104	**FIORENZATO-FIORENZATO DOGE-CEADO MC**	DX	83	45	9,5	3
620319	**FIORENZATO M.C. F5**	DX	64	37	8,5	3
620320	**FIORENZATO M.C. F6**	DX	83	49	9,5	3
720049	**FIORENZATO F64E ON DEMAND**	DX	64	37	8,5	3
720057	**FIORENZATO F64EVO**	DX	64	37	8,5	3
720067	**FIORENZATO F4A-F4E**	DX	58	33	8,5	3
620347	**GAGGIA BABY**	DX	50	30	7,5	3
700141	**GAGGIA - ARISTARCO**	DX	58	36	8	3
700108	**GAGGIA - ARISTARCO**	DX	64	37	8,5	3
620310	**GAGGIA - ARISTARCO**	DX	74	42	9,5	3
700133/4	**GAGGIA - ARISTARCO**	DX	84	46	9	3
700133/5	**GAGGIA MILANO**	DX	85	44	9	3
702824	**MACAP M4-M5-M5 PLUS 1.400 giri**	DX	58	33	8,5	3
620300	**MACAP MC6 - MX 1.400 giri**	DX	65	38	8,5	3
620304	**MACAP MC6 - MX 900 giri**	DX	65	38	8,5	3
620301	**MACAP MC7 - M7**	DX	75	42	9	3
620308	**MACAP M4D-M5D-M5D PLUS 1.400 giri**	DX	58	34	8,5	3
620306	**MACAP M7A900**	DX	75	42	9	3
620365	**MACAP MXK CONICHE-FIORENZATO F63K**	DX	63	13c	23	3
620344	**MACAP M7K CONICHE**	DX	68	13c	25	4

CODICE *code*	MACINACAFFE' *coffee grinder*	ROTAZIONE *rotation*	Ø *out*	Ø *in*	SPESSORE *thickness*	FORI *holes*
700110	**MACDOBAR**	DX	57	37	6	2
700108	**MACDOBAR**	DX	64	37	8,5	3
620305	**MAHLKÖNIG K30 12 DENT**	SX	65	38	8,5	2
620305/K	**MAHLKÖNIG K30 11/12 DENT**	SX	65	38	8,5	2
620305/11	**MAHLKÖNIG K110**	SX	65	38	8,5	2
620323	**MAHLKÖNIG EK43-EKK43**	SX	98	54	9	3
620379	**MAHLKÖNIG EK43-EKK43 ORIGINAL**	SX	98	54	9	3
620378	**MAZZER LUX MONOFASE**	DX	61	35	8,5	3
620358	**MAZZER MINI (dosatore)**	DX	58	33	8,5	3
	FIORENZATO M.C. F4 - COMPAK K3					
620373	**MAZZER MINI (dosatore) ORIGINAL**	DX	58	33	8,5	3
620376	**MAZZER MINI ON DEMAND ORIGINAL**	DX	64	37	8,5	3
700108	**MAZZER JOLLY MONOFASE**	DX	64	37	8,5	3
700108/T	**MAZZER JOLLY ORIGINAL TRIFASE**	DX	64	37	8,5	3
700108/M	**MAZZER JOLLY ORIGINAL MONOFASE**	DX	64	37	8,5	3
	FOR DOSER AND ON DEMAND					
700135	**MAZZER MAJOR**	DX	83	49	9	3
700135/T	**MAZZER MAJOR TRIFASE**	DX	83	49	9	3
700135/M	**MAZZER MAJOR ORIGINAL MONOF.**	DX	83	49	9	3
	FOR DOSER AND ON DEMAND					
700135/TM	**MAZZER MAJOR ORIGINAL TRIF.-ROYAL MONOF.**	DX	83	49	9	3
700132	**MAZZER MAYOR ORIGINAL TRIF.**	DX	83	49	9	3
	ROYAL MONOF. TITANIO					
620362	**MAZZER ROBUR CONICHE TRIF.**	DX	83	14c	25	3
620375	**MAZZER ROBUR-KOLD ORIGINAL TRIF**	DX	83	14c	25	3
620363	**MAZZER ROBUR CONICHE MONOF.**	DX	71	14C	25	3
620372	**MAZZER ROBUR-KOLD ORIGINAL C. M.**	DX	71	14c	25	3
	FOR DOSER AND ON DEMAND					
620371	**MAZZER KONY CONICHE MONOFASE**	DX	63	12c	23	3
620369	**MAZZER KONY ORIGINAL C.M.**	DX	63	12c	23	3
	FOR DOSER AND ON DEMAND					

CODICE *code*	MACINACAFFE' *coffee grinder*	ROTAZIONE *rotation*	Ø *out*	Ø *in*	SPESSORE *thickness*	FORI *holes*
620370	**MAZZER KONY CONICHE TRIFASE ORIGINAL**	DX	67	14c	23	3
620341	**NUOVA SIMONELLI GRINTA**	DX	50	30	7,5	3
620348	**OBEL JUNIOR**	SX	50	31	8	3
620345	**OBEL DSQ - EB**	SX	64	38	9	3
700103	**OBEL TRIFASE**	SX	64	38	9	3
700139	**QUICK MILL**	SX	66	35	9	3
700138	**QUAMAR**	DX	63	38	9	9
700128	**QUAMAR ON DEMAND**	DX	63	38	9,5	3
620348	**RANCILIO ROCKY-JACKY MD40**	SX	50	31	8	3
700103	**RANCILIO MD50**	SX	64	38	9	3
700140	**RANCILIO MD80**	SX	75	43	10,5	3
620343	**ROSSI**	SX	64	38	9	3
620344	**ROSSI CONICHE**	DX	68	13c	25	4
620353	**SAECO**	SX	43	25	7	3
620359	**SAECO CONICHE**	DX	40/48	10	20	-
620359/P	**SAECO CONICHE PERFORMANCE**	DX	40/48	10	20	-
620355	**SAN MARCO**	DX	64	37	8,5	3
620310	**SAN MARCO**	DX	74	42	9,5	3
700133/4	**SAN MARCO**	DX	84	46	9	3
620321	**SAN MARCO SEMICONICA MK-LK**	DX	84	46	9	3
620360	**SAN MARCO CONICHE**	DX	68	13c	25	4b
620346	**SANTOS**	SX	64	35	9	3
620377	**SANTOS ORIGINAL**	SX	64	35	9	3
620354	**WEGA - FIORENZATO**	SX	63	38	9	3
620356	**WEGA - COMPAK**	DX	64	38	9	3
620357	**WEGA - COMPAK**	DX	80	41	10	3
620307	**WEGA-COMPAK - OBEL CONICHE**	DX	68/49	13	25	4

MACINE FOOD FRIENDLY

CODICE *code*	MACINACAFFE' *coffee grinder*	ROTAZIONE *rotation*	Ø *out*	Ø *in*	SPESSORE *thickness*	FORI *holes*
633536	**CIMBALI-DRM-6S**	DX	64	37	9	3
633534	**FAEMA MC CONICHE-BNZ-CIMBALI CONIK**	DX	68	11	25	4
633538	**FAEMA MD 2000-3000**	DX	75	43	9	3
633531	**MACAP CONICHE MONOFASE**	DX	68	13c	25	4
633537	**MAZZER JOLLY MONOFASE**	DX	64	37	8,5	3
633530	**MAZZER KONY CONICHE MONOF.**	DX	63	12c	23	3
633540	**MAZZER MAJOR**	DX	83	49	9	3
633535	**MAZZER ROBUR C.M.**	DX	71	14c	25	3
633532	**RANCILIO**	SX	64	38	9	3
633541	**ROSSI/BRASILIA**	SX	64	38	9	3
633542	**OBEL DSQ-EB**	SX	64	38	9	3
633543	**WEGA-COMPAK**	DX	63	38	9	3
633544	**WEGA-COMPAK-OBEL CONICHE**	DX	68/49	13	25	4

MACINE INDUSTRIALI

620311	**CIAT**	DX	108	38	11	3
620311/13	**CIAT**	DX	108	38	13	3
620309	**CIAT mod MT4-VITTORIA mod MS9**	SX	123	45	12	3
620315	**DITTING mod KF/KFR 804**	SX	80	40	9	2
620316	**DITTING mod KF/KFA/KFR 903**	SX	90	45	9	2
620317	**DITTING mod KF/KFA/KFR 1203**	SX	120	60	9	4
620318	**DITTING mod KF/KFA/KFR 1403**	SX	140	70	9	4
620329	**PETRONCINI ORIGINAL mod S/2-10**	DX/SX	120	50	10	4

Pressino alluminio
Prodotto da Nuova Ricambi.

620438 ø 58mm
620439 ø 53mm
620444 ø 51mm
620445 ø 49mm

Alluminium Tamper
Made by Nuova Ricambi.

620438 ø 58mm
620439 ø 53mm
620444 ø 51mm
620445 ø 49mm

620852 ø 58mm
Pressino acciaio inox

620852 ø 58mm
Stainless steel Tamper

Pressino acciaio inox

620894 ø 53mm

Coffee Tamper Stainless steel

620894 ø 53mm

Pressino acciaio inox

620895 ø 57mm

Stainless steel Tamper

620895 ø 57mm

Pressino plastica

513744 58-53 mm

Plastic Tamper

513744 58-53 mm

Accessorio distribuzione caffè regolabile

620807 ø 53mm
620808 ø 57mm
620809 ø 58mm

Coffee redistribution tool adjustable

620807 ø 53mm
620808 ø 57mm
620809 ø 58mm

B65 – Per macchine: Astoria Plus 4 You, La Spaziale, Wega Concept.

B66 – Per macchine: Dalla Corte, La San Marco, Izzo.

B68 – Per macchine: Cimbali, Carimali, Gaggia, Reneka.

B70 – Per macchine: Marzocco, Synesso, Slayer, Kees Van der Westen, Nuova Simonelli, Victoria Arduino, Rancilio, Promac, Magister, Astoria, Conti, Elektra, Pavoni, Fracino. E61 e gruppi compatibili come Faema, Vibiemme, Wega, Ascaso, Bezzera, Bfc, Bianchi, Brasilia, D.i.d. L'orchestrale, Ecm, Expobar, Fiorenzato, Grimac, Iberital, La Nuova Era, La Scala, Quality Espresso, Rocket, Royal First, San Remo, SV – Sab, Vfa.

B65 *– Suitable for use with machines: Astoria Plus 4 Yuo, La Spaziale, Wega Concept.*

B66 *– Suitable for use with machines: Dalla Corte, La San Marco, Izzo.*

B68 *– Suitable for use with machines: Cimbali, Carimali, Gaggia, Reneka.*

B70 *– Suitable for use with machines: Marzocco, Synesso, Slayer, Kees Van der Westen, Nuova Simonelli, Victoria Arduino, Rancilio, Promac, Magister, Astoria, Conti, Elektra, Pavoni, Fracino. E61 and compatible groups such as Faema, Vibiemme, Wega, Ascaso, Bezzera, Bfc, Bianchi, Brasilia, D.i.d. L'orchestrale, Ecm, Expobar, Fiorenzato, Grimac, Iberital, La Nuova Era, La Scala, Quality Espresso, Rocket, Royal First, San Remo, SV – Sab, Vfa.*

Filtro B68 1 T H24,5 E

527867

Filter Basket B68 1 T H24,5 E

527867

Filtro B68 2 T H24,5 M
senza canalino

527868

Filter Basket B68 2 T H24,5 M Ridgeless

527868

Filtro B68 2 T H26,5 E
senza canalino

528265

Filter Basket B68 2 T H26,5 E Ridgeless

528265

Filtro B70 1 T H24,5 N

527244

Filter Basket B70 1 T H24,5 N

527244

Filtro B70 2 T H24,5 M

527245

Filter Basket B70 2 T H24,5 M

527245

Filtro B70 2T C H24 E
senza canalino

527246

Filter Basket B70 2T C H24 E Ridgeless

527246

Filtro B70 1 T H26,5 E

527264

Filter Basket B70 1 T H26,5 E

527264

Filtro B70 2 T H26,5 M

527265

Filter Basket B70 2 T H26,5 M

527265

Filtro B70 2T C H26 E
senza canalino

527266

Filter Basket B70 2T C H26 ERidgeless

527266

Filtro B70 2 T H28,5 E
senza canalino

527285

Filter Basket B70 2 T H28,5 E Ridgeless

527285

Filtro B66 1T H25 M

527200

Filter Basket B66 1T H25 M

527200

Filtro B66 2T H26 M

527201

Filter Basket B66 2T H26 M

527201

Filtro Aereopress

527290

Filter Aereopress

527290

Filtro B66 2T H32 M
senza canalino

527202

Filter Basket B66 2T H32 M Ridgeless

527202

Filtro B65 2T H27,5 M

525275

Filter Basket B65 2T H27,5 M

525275

Filtro B65 2T H32 M
senza canalino

525320

Filter Basket B65 2T H32 M Ridgeless

525320

Filtro per Siphon

527291

Filter for Siphon

527291

Doccia RA 200 IM
Rancilio

525352

Shower Head RA 200 IM
Rancilio

525352

Doccia CI 200 IM
Cimbali-Astoria

525200

Shower Head CI 200 IM
Cimbali-Astoria

525200

Doccia GA 200 IM
Gaggia

525353

Shower Head GA 200 IM
Gaggia

525353

Doccia San Marco
Dalla Corte-P4Y

525201

Shower Head San Marco
Dalla Corte-P4Y

525201

Doccia SI 200 IM
Nuova Simonelli

525354

Shower Head SI 200 IM
Nuova Simonelli

525354

Doccia Gruppo Leva
Competition

525202

Shower Lever Group
Competition

525202

Doccia MA200 IM
Marzocco-Synesso-Slayer

522001

Shower Head MA200 IM
Marzocco-Synesso-Slayer

522001

Doccia Rete Fine
Rancilio 35WM

525002

Shower Head Fine
Rancilio 35WM

525002

Doccia Tipo E61
Competition

525001

Shower Head Tipo E61
Competition

525001

Doccia Rete Fine
S.Marco-Dalla Corte-PY

525003

Shower Head Fine
S.Marco-Dalla Corte-PY

525003

Doccia Rete Fine
Marzocco-Synesso 35WM

525004

Shower Head Fine Marzocco-Synesso 35WM

525004

Doccia Rete Fine
Nuova Simonelli 35WM

525007

Shower Head Fine Nuova Simonelli 35WM

525007

Doccia Rete Fine
Cimbali-Astoria 35WM

525005

Shower Head Fine Cimbali-Astoria 35WM

525005

Doccia Doppia Spaziale
SP 200 IM SPD 200 IM

525008

Double Shower Spaziale SP 200 IM SPD 200 IM

525008

Doccia Rete Fine
Tipo E61Competit 35WM

525006

Shower Head Fine Tipo E61Competit 35WM

525006

Doccia Tipo E61Competi-
tion 200 RM

525009

Shower Head Type E61 Competition 200 RN

525009

Doccia MA200 NT
Marzocco/Synesso/Slayer

522001/NT

MA200 NT Marzocco/ Synesso/Slayer Shower

522001/NT

Doccia CI200 NT
Cimbali

522003/NT

CI200 NT Cimbali Shower

522003/NT

Doccia SI200 NT
Nuova Simonelli

522002/NT

SI200 NT Nuova Simonelli Shower

522002/NT

Doccia E61200 NT
Faema

522004/NT

E61200 NT Faema Shower

522004/NT

Supporto portafiltro
Supporto portafiltro in acciaio inox con portapressino.

620866 Modello completo

Filter holder support
Complete stainless steel filter holder and tamper support.

620866 *Complete model*

Supporto portafiltro 'Style'
Supporto portafiltro in acciaio inox.

620869 'Style'

'Style' Filter holder support
Stainless steel filter holder support.

620869 *'Style'*

Supporto portafiltro
Supporto portafiltro in acciaio inox.

620857

Filter holder support
Stainless steel filter holder support.

620857

Motta
Made in Italy

620203 2 tazze/0.25L
620240 3 tazze/0.35L
620202 4 tazze/0.50L
620235 6 tazze/0.75L
620236 8 tazze/1L

Motta
Made in Italy
Heavy stainless steel jug with accentuated spout and heavy body.

620203 2 cups/0.25L
620240 3 cups/0.35L
620202 4 cups/0.50L
620235 6 cups/0.75L
620236 8 cups/1L

Easy

620250 3 tazze/0.30L
620251 6 tazze/0.60L
620252 8 tazze/0.80L
620253 10 tazze/1.00L

Easy

620250 3 cups/0.30L
620251 6 cups/0.60L
620252 8 cups/0.80L
620253 10 cups/1.00L

Anniversario
Made in Italy

620214 3 tazze/0.30L
620216 9 tazze/0.75L
620217 12 tazze/1L

Anniversario
Made in Italy

620214 3 cups/0.30L
620216 9 cups/0.75L
620217 12 cups/1L

Mini

620222 1cl Set 4 pz.
620223 3cl Set 2 pz.

Mini

620222 1cl Set 4 pz.
620223 3cl Set 2 pz.

Cremierino

620238 3oz / 0.10L

Small milk Jug

620238 3oz / 0.10L

Lattiera Antiaderente
Easy

620255 3 tazze cl.30
620256 6 tazze cl.60
620257 8 tazze cl.80
620258 10 tazze cl.100

Coating Milk Pitcher
Easy

620255 3 cups cl.30
620256 6 cups cl.60
620257 8 cups cl.80
620258 10 cups cl.100

Spargicacao 280 gr

620237

Stainless steel cocoa shaker 10 oz

620237

Decoratore Cappuccino

620254

Cappuccino Decorato

620254

Spargicacao Acciaio inox
Made in Italy
620234

Stainless steel cocoa shaker
Made in Italy

620234

Decoratore Cacao

620248

Cacao Decorator

620248

Timer digitale con magnete e clip

701059

Digital Timer with magnet and clip

701059

Termometro per lattiere NR
Ø 29 mm

620208

NR Milk Jug Thermometer
Ø 29 mm

620208

Punteruolo per latte Art

620212
620212/R Rosso
620212/B Blu

Latte Art Pen

620212
620212/R Red
620212/B Blu

Bottiglietta decorazioni

701060

Decorations squeeze bottle

701060

Spruzzatore per pulizia lattiere

701071
Dimensioni 174x160x69h mm

Frothing pitcher rinser

701071
Dimension 174x160x69h mm

Spruzzatore per pulizia lattiere da banco

701070
Dimensioni 174x160x129h mm

Counter top frothing pitcher rinser

701070
Dimension 174x160x129h mm

Assieme per spruzzatore

800002

Rinser Assembly

800002

Disco spruzzatore

800001

Rinser Disk

800001

Distanziale spuzzatore

800003

Spacer Assembly

800003

Kit nuovo disco spruzzatore

701076

Kit new rinser disk

701076

Kit Accessorio per vassoiopulizia lattiere

701073

Accessory kit for milk jugs rinser tray

701073

Vassoio per pulizia lattiere da incasso
701077
Dimensioni 400x220x34 mm
701079
Dimensioni 600x220x34 mm

Milk jugs rinser tray for recessed
701077
Dimension 400x220x34 mm
701079
Dimension 600x220x34 mm

Vassoio per pulizia lattiere da banco
701072
Dimensioni 400x220x30 mm
701078
Dimensioni 600x220x30 mm

Milk jugs rinser tray counter top
701072
Dimension 400x220x30 mm
701078
Dimension 600x220x30 mm

Cucchiaio Agitatore Acciaio

701041 29cm/ 11"

Stirring Spoon

701041 29cm/ 11"

Dosatore in metallo con tappo in plastica (12Pz.)

701042

Metal Pourer with Plastic Cork (12 Pcs.)

701042

Cucchiaio assaggio

620218

Taste Spoon

620218

Spatola

701043 6"/ 15cm

Foam Knife

701043 6"/ 15cm

Panno Barista Nero Neutro 40x30 cm C/MOSCHETTONE

620810

Barista Towel Black Neutral 40x30 cm WITH CLIP

620810

615790

Bilancia ACAIA Lunar

Scale ACAIA Lunar

615791

Bilancia ACAIA Pearl Bianca

White scale ACAIA Lunar

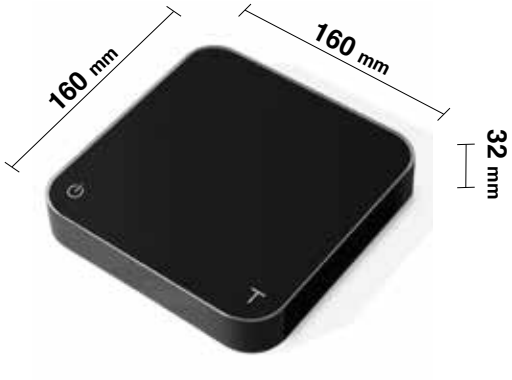

615792

Bilancia ACAIA Pearl Nera

Black scale ACAIA Pearl

615751
Pressino legno/acciaio
Espresso FLAT 58 mm

Rubber/wood tamper
Espresso FLAT 58 mm

615752
Pressino legno/acciaio
Espresso Convex 58 mm

Wood/S.Steel tamper
Espresso Convex 58 mm

615753
Pressino legnonoce/acciaio
Espresso Flat 58 mm

Nut wooden/S.Steel tamper
Espresso Flat 58 mm

615754
Pressino legnonoce/acciaio
Espresso Convex 58 mm

Nut wooden/S.Steel tamper
Espresso Convex 58 mm

615755
Pressino alluminio/acciaio
Espresso Flat 58 mm

Alluminium/S.Steel tamper
Espresso Flat 58 mm

615756
Pressino alluminio/acciaio
Espresso Convex 58 mm

Alluminium/S.Steel tamper
Espresso Convex 58 mm

615702
Pressino opaco XT 58mm

XT 58 mm Tamper cast finish handle

615701
Pressino lucido XT 58mm

XT 58 mm Tamper mirror finish handle

615760
Portapressino
U.f.o. gomma

Rubber tamper seat U.f.o.

615778
Lattiera Cafelat 0,75 Lt.

Milk Pitcher Cafelat 0,75 Lt.

615759
Supporto a specchio

Mirror stamp stand

615768
Tappetino

Tamper mat

615765
Spazzolino guarnizione gruppo

Group gasket brush

615772
Tappetino angolare

Corner tamper mat

615774
Ricambi Spazzolini (3)

Spare cleaning brush (3)

615769
Tappetino Splat Nero

Black splat tamper mat

615777
Anello ottone Gruppo Leva Gaggia

Brass ring level Group Gaggia

615766
Battifondo Tubbi
Nero h.13 cm

Black knock box
Tubbi h.13 cm

615767
Battifondo Tubbi
Rosso h.13 cm

Red knock box
Tubbi h. 13cm

615773
Battifondo Large Tubbi
Nero h. 15 cm

Black knock box Large
Tubbi h. 15 cm

615771
Set Panno Microfibra
Barista (4Pz.)

Cleaning cloth
set Barista (4Pcs.)

615779
Barra per battifondo
Tubbi 615766-615767
L.15 cm

Bar for knock box
Tubbi 615766-615767
L.15 cm

615775
Barra per battifondo
Large Tubbi 615773
L.18,5 cm

Bar for knock box
Large Tubbi 615773
L.18,5 cm

615776
Battifondo Inox
Caffè

Stainless steel Cafè
knock box

Per: BFC - Brasilia B61- Conti - ECM - Faema - Futurmat - Isomac - La Pavoni - MYWAY - Quickmill - Rocket- San Remo - VBM - Wega

For: BFC - Brasilia B61- Conti - ECM-Faema - Futurmat - Isomac - La Pavoni - MY-WAY - Quickmill - Rocket - San Remo - VBM - Wega

516525
Guarnizione sottocoppa
8 mm rossa

Cup seal red 8 mm

516526
Guarnizione sottocoppa
8,5 mm blu

Cup seal blue 8,5 mm

Per: Rancilio
For: Rancilio

516524
Guarnizione sottocoppa

Cup sea

Per: Nuova Simonelli
For: Nuova Simonelli

516522
Guarnizione sottocoppa
8,3 mm rossa

Cup seal red 8,5 mm

516523
Guarnizione sottocoppa
9 mm blu

Cup seal blue 9 mm

Per: La Marzocco
For: La Marzocco

516527
Guarnizione sottocoppa
8,2 mm blu

Cup seal blue 8,2 mm

615796

Pressino Push Nero

Push Tamper Black

615797

Pressino Push Blu

Push Tamper Blue

615798

Pressino Push Verde

Push Tamper Green

615799

Pressino Push Rosa

Push Tamper Pink

615789

Pressino Push Rosso

Push Tamper Red

615788

Pressino Push Nero ø53 mm

Push Tamper Black ø53 mm

620879 Pressino Nero 53mm *Black Tamper*

620878/N Pressino Nero 58mm *Black Tamper*

620881/N Spargicacao Nero Fori Fini
Black Fine Mesh Cocoa Shaker
620881/R Spargicacao Rosso Fori Fini
Red Fine Mesh Cocoa Shaker
620881/S Spargicacao Silver Fori Fini
Silver Fine Mesh Cocoa Shaker

620845 Latte ID Clip "SOY" (2pz.)
Milk ID Clip "SOY" (2pcs.)
620846 Latte ID Clip "ALMID" (2pz.)
Milk ID Clip "ALMID" (2pcs.)
620847 Latte ID Clip "L.FREE" (2pz.)
Milk ID Clip "L.FREE" (2pcs.)
620848 Latte ID Clip "LIGHT" (2pz.)
Milk ID Clip "LIGHT" (2pcs.)
620849 Latte ID Clip "FULL" (2pz.)
Milk ID Clip "FULL" (2pcs)

620882/N Spazzolino Lungo Nero
Black Long Group Brush

620883 Tappetino per Pressare
Tamper Mat

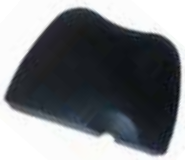

620885 Tappetino Professional per pressare
Professional Tamper Mat

620886 "The Big Barista" Battifondo
"The Big Barista" knock box

620886/F Base "The Big Barista" Battifondo
Base"The Big Barista" Knock box

620889 Barra battifondo "The Big Barista"
Knock Box Bar "The Big Barista"

620876/N Battifondo Nero H/175mm
Black Knock Tube H/175mm
620876/R Battifondo Rosso H/175mm
Red Knock Tube H/175mm
620876/S Battifondo Silver H/175mm
Silver *Knock Tube H/175mm*

620877/N Battifondo Nero H/110mm
Black Knock Tube H/110mm
620877/R Battifondo Rosso H/110mm
Red Knock Tube H/110mm
620877/S Battifondo Silver H/110mm
Silver *Knock Tube H/110mm*

620888 Barra battifondo
Knock Box Bar

620897 Professional Kit Barista Nero
Professional Kit Barista Black
620897/G Professional Kit Barista Grigio
Professional Kit Barista Dark grey
620897/R Professional Kit Barista Rosso
Professional Kit Barista Red

615899

Cono singolo super fine Inox EDO
Stainless steel single cone super fine EDO

615900

Cono singolo fine Inox EDO
Stainless steel single cone fine EDO

615901

Cono doppio Inox EDO

Double stainless steel cone EDO

620265

Tappetino angolare in gomma

Angular rubber tamper mat

620276

Bilancia Digitale con timer 130x190x28 mm

Digital scale with timer 130x190x28 mm

620844

Bilancia tascabile digitale EDO
123x72x20 mm

Digital pocket scale edo EDO
123x72x20 mm

620249

Battifondo incassato senza fondo EDO
Dimensioni 150,5x137x108,5 mm

Knock box built in bottomless EDO
Dimensions 150,5x137x108,5 mm

620266

Battifondo EDO con Fondo
Dimensioni 150,5x137x110 mm

Knock box EDO with bottom
Dimensions 150,5x137x110 mm

620266/N

Battifondo EDO nero opaco con Fondo
Dimensioni 150,5x137x110 mm

Matt Black knock box EDO with bottom
Dimensions 150,5x137x110 mm

622010

Barra gommata battifondo EDO ø 35x130 mm

Knock box Bar EDO ø 35x130 m

620277

Supporto pressa Caffè nero EDO

Coffee tamper support black EDO

620896

Panno barista EDO 40x30 cm C/MOSCHETTONE

Barista towel EDO 40x30 cm WITH CLIP

620843

Panno barista EDO 40x30 cm MARRONE

Barista towel EDO pack 40x30 cm BROWN

620898

Panno barista EDO 40x30 cm AZZURRO

Barista towel EDO pack 40x30 cm LIGHT BLUE

620899

Panno barista EDO 40x30 cm GRIGIO

Barista towel EDO pack 40x30 cm GREY

620915

Grembiule EDO 93x67 cm

Apron EDO 93x67 cm

620230
Lattiera 350 ml EDO
Milk Pitcher 350 ml EDO

620231
Lattiera 600 ml EDO
Milk Pitcher 600 ml EDO

620232
Lattiera 900 ml EDO
Milk Pitcher 900 ml EDO

620267
Lattiera 350 ml BABY PINK
Milk Pitcher 350 ml BABY PINK

620271
Lattiera 600 ml BABY PINK
Milk Pitcher 600 ml BABY PINK

620268
Lattiera 350 ml GLASS GREEN
Milk Pitcher 350 ml GLASS GREEN

620272
Lattiera 600 ml GLASS GREEN
Milk Pitcher 600 ml GLASS GREEN

620269
Lattiera 350 ml RED
Milk Pitcher 350 ml RED

620273
Lattiera 600 ml RED
Milk Pitcher 600 ml RED

620270
Lattiera 350 ml TIFFANY BLUE
Milk Pitcher 350 ml TIFFANY BLUE

620274
Lattiera 600 ml TIFFANY BLUE
Milk Pitcher 600 ml TIFFANY BLUE

620297
Lattiera 350 ml WHITE
Milk Pitcher 350 ml WHITE

620299
Lattiera 600 ml WHITE
Milk Pitcher 600 ml WHITE

620296
Lattiera 350 ml BLACK
Milk Pitcher 350 ml BLACK

620298
Lattiera 600 ml BLACK
Milk Pitcher 600 ml BLACK

620264

Lattiera latte Pro 600 ml

Milk jug latte Pro 600 ml

620275
Punteruolo per latte Art

Latte Art tool

620842
Tazza da cupping professionale

Professional cupping cup

620293

Set Caffè EDO Linea UZU Blu

Coffee Set EDO UZU Line Blue

620294

Set Caffè EDO Linea UZU Rosa

Coffee Set EDO UZU Line Rose

620295

Set Caffè EDO Linea UZU Azzurra

Coffee Set EDO UZU Line Light Blue

620325

Set Caffè EDO Linea UZU Verde

Coffee Set EDO UZU Line Green

Pressino 'Style' legno/inox
Prodotto da Nuova Ricambi.

'Style' Wodden-stainless steel tamper
Made by Nuova Ricambi

620446 ø 49mm
620447 ø 50mm
620448 ø 51mm
620800 ø 54mm
620867 ø 58mm
620868 ø 53mm

Pressino 'Style' legno/inox con base convessa soft.
Prodotto da Nuova Ricambi.

'Style' Wodden-stainless steel tamper with soft convex base
Made by Nuova Ricambi.

620872 ø 57.5mm
620873 ø 53mm

Pressino 'Competizione' legno/inox
Prodotto da Nuova Ricambi.

'Competizione' Wodden-stainless steel tamper
Made by Nuova Ricambi.

620801 ø 49mm
620802 ø 50mm
620803 ø 51mm
620804 ø 54mm
620890 ø 53mm
620891 ø 57,5mm
620892 ø 58,3mm
620893 ø 58,5mm

Pressino 'Style' legno/inox con base convessa soft.
Prodotto da Nuova Ricambi.

'Style' Wodden-stainless steel tamper with soft convex base
Made by Nuova Ricambi.

620805 ø 52,5mm
620806 ø 57,5mm

Pressino dinamometrico regolabile lucido
Prodotto da Nuova Ricambi.
Ideale per una costante pressione sul caffè macinato.
Pressione regolabile 11-14 kg.
Permette l'uso di una macinatura più grossa che riscalda meno il caffè e limita l'usura delle macine.

Adjustable polished stainless steel dynamometric tamper
Made by Nuova Ricambi. Ideal for a constant pressure on ground coffee. Adjustable pressure 11-14 kg. It allows the use of coarser ground coffee, resulting in the coffee heating up less and the burrs lasting longer.

Disco Alluminio / *Aluminium Disc*

620870 ø 58mm
620870/C ø 58,3mm
620871 ø 53mm

Disco Acciaio Inox / *Stainless Steel Disc*

620874 ø 58mm
620875 ø 53mm

Pressino EDO YOUNG PRO Rosso

Red EDO Tamper YOUNG PRO

620830 Ø58
620830/49 Ø49
620830/50 Ø50
620830/51 Ø51
620830/53 Ø53
620830/54 Ø54

Pressino EDO YOUNG PRO Rosso con base convessa

Red EDO Tamper YOUNG PRO with convex base

620892 Ø58
620894 Ø53

Pressino EDO YOUNG PRO Nero

Black EDO Tamper YOUNG PRO

620831 Ø58
620831/49 Ø49
620831/50 Ø50
620831/51 Ø51
620831/53 Ø53
620831/54 Ø54

Pressino EDO YOUNG PRO Nero con base convessa

Black EDO Tamper YOUNG PRO with convex base

620893 Ø58
620895 Ø53

Pressino EDO LINEA YOUNG Nero

Black EDO Tamper YOUNG LINE

620835 ø 58
620835/49 Ø49
620835/50 Ø50
620835/51 Ø51
620835/53 Ø53
620835/54 Ø54

Pressino EDO LINEA YOUNG Nero con base convessa

Black EDO Tamper YOUNG LINE with convex base

620970 Ø58
620976 Ø53

Pressino EDO LINEA YOUNG Rosso

Red EDO Tamper YOUNG LINE

620836 ø 58
620836/49 Ø49
620836/50 Ø50
620836/51 Ø51
620836/53 Ø53
620836/54 Ø54

Pressino EDO LINEA YOUNG Rosso con base convessa

Red EDO Tamper YOUNG LINE with convex base

620970 Ø58
620976 Ø53

Pressino EDO LINEA YOUNG Rosa

Pink EDO Tamper YOUNG LINE

620837 Ø58
620837/49 Ø49
620837/50 Ø50
620837/51 Ø51
620837/53 Ø53
620837/54 Ø54

Pressino EDO LINEA YOUNG Rosa con base convessa

Pink EDO Tamper YOUNG LINE with convex base

620972 Ø58
620978 Ø53

Pressino EDO LINEA YOUNG Verde

Green EDO Tamper YOUNG LINE

620838 Ø58
620838/49 Ø49
620838/50 Ø50
620838/51 Ø51
620838/53 Ø53
620838/54 Ø54

Pressino EDO LINEA YOUNG Vedre con base convessa

Green EDO Tamper YOUNG LINE with convex base

620973 Ø58
620979 Ø53

Pressino EDO LINEA YOUNG Blue

Blue EDO Tamper YOUNG LINE

620839 Ø58
620839/49 Ø49
620839/50 Ø50
620839/51 Ø51
620839/53 Ø53
620839/54 Ø54

Pressino EDO LINEA YOUNG Blue con base convessa

Blue EDO Tamper YOUNG LINE with convex base

620974 Ø58
620980 Ø53

Pressino EDO LINEA YOUNG Bianco

White EDO Tamper YOUNG LINE

620840 Ø58
620840/49 Ø49
620840/50 Ø50
620840/51 Ø51
620840/53 Ø53
620840/54 Ø54

Pressino EDO LINEA YOUNG Blue con base convessa

Blue EDO Tamper YOUNG LINE with convex base

620975 Ø58
620981 Ø53

620287

Accessorio distrib. caffé "TWISTER" nero

Coffee distrib. accessory "TWISTER" black

620288

Accessorio distrib. caffé "TWISTER" rosso

Coffee distrib. accessory "TWISTER" red

620289

Accessorio distrib. caffé "TWISTER" grigio

Coffee distrib. accessory "TWISTER" grey

620290

Accessorio distrib. caffé "TWISTER" verde

Coffee distrib. accessory "TWISTER" green

620291

Accessorio distrib. caffé "TWISTER" rosa

Coffee distrib. accessory "TWISTER" pink

620327

Accessorio distrib. caffé "TWISTER" blu

Coffee distrib. accessory "TWISTER" blue

620326

Wormhole Nero

Black Wormhole

620326/B

Wormhole Blu

Blue Wormhole

620326/R

Wormhole R osso

Red Wormhole

– Per macchine: Astoria , Bezzera , Carimali , Conti , Dalla Corte , ECM , Expobar , Faema , Kees Van Der Western , La Marzocco , La Pavoni , La Spaziale , Rancilio , Rocket , San Marco , Vibiemme , Wega.

– Suitable for use with machines: Astoria , Bezzera , Carimali , Conti , Dalla Corte , ECM , Expobar , Faema Kees Van Der Western , La Marzocco , La Pavoni , La Spaziale , Rancilio , Rocket , San Marco , Vibiemme , Wega.

620278

Foam Locus 0,4 L

Foam Locus 0,4 L

620279

Foam Locus 0,6 L

Foam Locus 0,6 L

620280

Foam Locus 1 L

Foam Locus 1 L

620281

Foam Locus Essential set
0,6 L - 0,6 L - 1 L

Foam Locus Essential set
0,6 L - 0,6 L - 1 L

620282

Foam Locus Essential
Temp. Set.
0,4 L - 0,6 L - 1 L

Foam Locus Essential
Temp. Set.
0,4 L - 0,6 L - 1 L

620283

Foam Locus Stickers

Foam Locus Stickers

Foro stretto – Per macchine: Astoria , Carimali , Conti , Dalla Corte , ECM , Expobar , Kees Van Der Western La Marzocco , Nuova Simonelli , Rancilio , Rancilio Silvia 1 , San Remo , Synesso , Victoria Arduino.

Foro largo – Per macchine: Bezzera , Cimbali , Faema , La Pavoni , La Spaziale , Rocket , San Marco , Vibiemme , Wega.

Narrow hole *– Suitable for use with machines: Astoria , Carimali , Conti , Dalla Corte , ECM , Expobar , Kees Van Der Western , La Marzocco , Nuova Simonelli , Rancilio , Rancilio Silvia 1 , San Remo , Synesso , Victoria Arduino.*

Wide hole *– Suitable for use with machines: Bezzera , Cimbali , Faema , La Pavoni , La Spaziale , Rocket , San Marco Vibiemme , Wega.*

620336/N

Foam Locus Prime 350 ml Foro Stretto

Foam Locus Prime 350 ml Narrow Hole

620336/W

Foam Locus Prime 350 ml Foro Largo

Foam Locus Prime 350 ml Wide Hole

620337/N

Foam Locus Prime 600 ml Foro Stretto

Foam Locus Prime 600 ml Narrow Hole

620337/W

Foam Locus Prime 600 ml Foro Largo

Foam Locus Prime 600 ml Wide Hole

620338/N

Foam Locus Prime 900 ml Foro Stretto

Foam Locus Prime 900 ml Narrow Hole

620338/W

Foam Locus Prime 900 ml Foro Largo

Foam Locus Prime 900 ml Wide Hole

620334

Foam Locus Spare Indicator Rings

Foam Locus Spare Indicator Rings

617938/A
Manopola acero portafiltro M10
Handle maple filterholder M10

700317/A
Manopola acero portafiltro M12
Filter holder handle maple wood M12

617938/N
Manopola noce canaletto portafilto M10
Handle walnut filterholder M10

700317/N
Manopola noce canaletto portafilto M12
Filter holder knob walnut M12

617938/U
Manopola ulivo portafiltro M10
Handle olive filterholder M10

700317/U
Manopola ulivo portafiltro M12
Filter holder handle olive wood M12

632316/A
Manopola portafiltro NR M10 acero
Maple filterholder handle NR M10

632317/A
Manopola portafiltro NR M12 acero
Maple filterholder handle NR M12

632316/N
Manopola portafiltro NR M10 noce
Walnut filterholder handle NR M10

632317/N
Manopola portafiltro NR M12 noce
Walnut filterholder handle NR M12

632316/U
Manopola portafiltro NR M10 ulivo
Olive filterholder handle NR M10

632317/U
Manopola portafiltro NR M12 ulivo
Olive filterholder handle NR M12

620284

Manopola Vapore Noce Canaletto

Nut Wood Steam Knob Canaletto

620285

Tappo Cromato per manopola vapore Noce

Chromed plug for nut wood steam Knob

620286

Manopola levetta gruppo e rubinetto acqua Noce Canaleto

Group and tap lever knob Nut wood Canaletto

620825
Collana chicchi caffè

Coffee beans brown necklace

620819
Portachiavi set barista NR

Barista set NR keychain

620826
Spilla chicchi caffè

Coffee beans brown brooch pin

620820
Portachiavi lattiera Edo chrome

Edo milk pitcher chrome keychain

620827
Spilla coffee dripper rossa

Coffee dripper red brooch pin

620821
Portachiavi lattiera Edo pink

Edo milk pitcher pink keychain

620828
Spilla tazzine baby pink

Cup brooch pin baby pink

620822
Portachiavi lattiera Edo green

Edo milk pitcher green keychain

620829
Spilla tazzine tiffany blue

Cup brooch pin tiffany blue

620823
Portachiavi lattiera Edo red

Edo milk pitcher red keychain

620841
Borsa tracolla Edo

Edo shoulder bag

620824
Portachiavi lattiera Edo tiffany blue

Edo milk pitcher tiffany blue keychain

Portafiltro 2 tazze con manopola legno acero NR M12 attacco beccucci 3/8 con molla e filtro

Filterholder 2 cups with maple wood handle NR M12 spout connection 3/8 with spring e filter

624000/A	Aurora , Bfc , Ecm , Elektra Futurmat - Ariete , La Scala La Marzocco , Sanremo Sv Italia , Vibiemme , Wega
624100/A	Faema
624200/A	Gaggia
624300/A	Nuova simonelli
624400/A	Rancilio
624500/A	Cimbali
624600/A	Astoria , Brasilia , Bezzera
624700/A	Dalla corte
624800/A	Pavoni Europiccola
624900/A	Astoria P4Y

Portafiltro 2 tazze con manopola legno noce NR M12 attacco beccucci 3/8 con molla e filtro

Filterholder 2 cups with walnut wood handle NR M12 spout connection 3/8 with spring e filter

624000/N	Aurora , Bfc , Ecm , Elektra Futurmat - Ariete , La Scala La Marzocco , Sanremo Sv Italia , Vibiemme , Wega
624100/N	Faema
624200/N	Gaggia
624300/N	Nuova simonelli
624400/N	Rancilio
624500/N	Cimbali
624600/N	Astoria , Brasilia , Bezzera
624700/N	Dalla corte
624800/N	Pavoni Europiccola
624900/N	Astoria P4Y

Portafiltro 2 tazze con manopola legno ulivo NR M12 attacco beccucci 3/8 con molla e filtro

Filterholder 2 cups with olive wood handle NR M12 spout connection 3/8 with spring e filter

624000/U	Aurora , Bfc , Ecm , Elektra Futurmat - Ariete , La Scala La Marzocco , Sanremo Sv Italia , Vibiemme , Wega
624100/U	Faema
624200/U	Gaggia
624300/U	Nuova simonelli
624400/U	Rancilio
624500/U	Cimbali
624600/U	Astoria , Brasilia , Bezzera
624700/U	Dalla corte
624800/U	Pavoni Europiccola
624900/U	Astoria P4Y

Portafiltro 2 tazze con manopola legno acero M12 attacco beccucci 3/8 con molla e filtro

Filterholder 2 cups with maple wood handle M12 spout connection 3/8 with spring e filter

624001/A	Aurora , Bfc , Ecm , Elektra Futurmat - Ariete , La Scala La Marzocco , Sanremo Sv Italia , Vibiemme , Wega
624101/A	Faema
624201/A	Gaggia
624301/A	Nuova simonelli
624401/A	Rancilio
624501/A	Cimbali
624601/A	Astoria - Brasilia - Bezzera
624701/A	Dalla corte
624801/A	Pavoni Europiccola
624901/A	Astoria P4Y

Portafiltro 2 tazze con manopola legno noce M12 attacco beccucci 3/8 con molla e filtro

Filterholder 2 cups with walnut wood handle M12 spout connection 3/8 with spring e filter

624001/N	Aurora , Bfc , Ecm , Elektra Futurmat - Ariete , La Scala La Marzocco , Sanremo Sv Italia , Vibiemme , Wega
624101/N	Faema
624201/N	Gaggia
624301/N	Nuova simonelli
624401/N	Rancilio
624501/N	Cimbali
624601/N	Astoria , Brasilia , Bezzera
624701/N	Dalla corte
624801/N	Pavoni Europiccola
624901/N	Astoria P4Y

Portafiltro 2 tazze con manopola legno ulivo M12 attacco beccucci 3/8 con molla e filtro

Filterholder 2 cups with olive wood handle M12 spout connection 3/8 with spring e filter

624001/U	Aurora , Bfc , Ecm , Elektra Futurmat - Ariete , La Scala La Marzocco , Sanremo , Sv Italia , Vibiemme , Wega
624101/U	Faema
624201/U	Gaggia
624301/U	Nuova simonelli
624401/U	Rancilio
624501/U	Cimbali
624601/U	Astoria , Brasilia , Bezzera
624701/U	Dalla corte
624801/U	Pavoni Europiccola
624901/U	Astoria P4Y

615801

Coffee Dripper V0601 Bianco

Coffee dripper V0601 White

615802

Coffee Dripper V602 Ceramic

Coffee Dripper V602 Ceramic

615815

Professional Dripper

Professional Dripper

615816

Coffee Dripper V60 02 Rosso Ceramic

Red Ceramic Coffe Dripper V60 02

615809

One Cup Cafeor 200ml

One Cup Cafeor 200ml

615818

New Syphon

New Syphon

615819

Aeropress

Aeropress

615810

Coldbrew

Coldbrew

615808

Bilancia per V60 con Timer fino a 2kg

Drip Scale for V60 With Timer

615822

Coffee Server VCS-OIB V60 450ml.

Coffee Server VCS-OIB V60 450ml.

615811

Ranger Server 360ml

Ranger server 360ml

615812

Ranger Server 600ml

Ranger Server 600ml

615803

Drip Decanter V60 "Buono"

V60 Coffee Drip Kettle "Buono"

615820

Elettric Buono Kettle EVKB-80E-HSV

Elettric Buono Kettle EVKB-80E-HSV

615823

Macinino a Mano Ceramica Mini Slim

Handgrinder Ceramic Mini Slim

615807

Macinino a Mano Ceramika Skerton

Handgrinder Ceramic Skerton

615804

Filtri Carta Bianchi per Dripper 01 (40pz)

Paper Filter White for Dripper 01 (40 pcs)

615805

Filtri Carta Bianchi per Dripper 02 (40pz)

Paper Filter White for Dripper 02 (40 pcs)

615813

Filtri Carta Bianchi per Dripper 01 (100 pz)

Paper Filter White for Dripper 01 (100 pcs)

615814

Filtri Carta Bianchi per Dripper 02 (100 pz)

Paper Filter White for Dripper 02 (100 pcs)

615817

Filtri Stoffa per Professional Dripper

Cloth Filters for Professional Dripper

615821

Single Stand VSS-1-OV V60

Single Stand VSS-1-OV V60

615830

Coffee Brewer Samantha

Samantha è la prima macchina da caffè del suo genere. E' in grado di impostare la temperatura ideale, erogare il caffè a diverse velocità, intervalli e volumi, tutto completamente controllabile con lo smartphone.
Puoi caricare le tue ricette preferite nell'app o salvare le tue miscele sperimentali e fare poi in modo che Samantha le ripeta ogni volta che vuoi, alla perfezione.
Per qualsiasi dubbio, sfoglia l'app per trovare le ricette condivise dai brewers di tutto il mondo o carica le tue per condividerle.
In alternativa, per un'estrazione senza grandi pretese, basta riempire il contenitore d'acqua, scegliere tra le ricette preimpostate di Samantha e in pochissimo tempo una bella tazza di caffè ti aspetta.
Realizzare la tazza perfetta di V60 non è mai stato così facile.

Coffee Brewer Samantha

Samantha is first of its kind that can set your ideal temperature, brew at different pour rates, intervals and volumes, fully controllable with your smartphone.
Load up your favourite recipes in the app, or save your experimental brews and have Samantha replicate it every time to perfection.
When in doubt, browse through the app for recipes shared by brewers all over the world, or upload yours to share the goodness.
Alternatively, for fuss-free brewing, simply fill up the water chamber, choose from Samantha's pre-set recipes and a fresh cup awaits you in no time.
Making the perfect cup of V60 has never been easier.

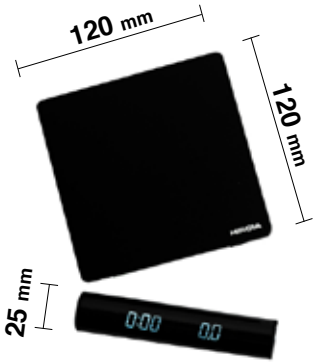

615831

Bilancia jimmy

La nuova bilancia intelligente all-in-one perfetta sia per l'espresso che per i pour-over.
Puoi decidere di staccare il display, che è magnetico, e puoi attaccarlo dove preferisci. Puoi monitorare la bilancia lontano dalla macchina.
Con il miglior hardware di qualsiasi bilancia sul mercato e con un processore a 32 Bit, Jimmy ti permette di lavorare con nuove funzioni avanzate. Perfezione nella sensibilità e reattività tra le sue caratteristiche. Jimmy è resistente all'acqua e ha una durata di 10 ore in uso continuo e 1000 ore in standby.
Super automatica, puoi personalizzare le modalità di utilizzo rendendo un'estrazione un'esperienza unica e perfetta, senza interruzioni grazie all' avvio automatico del timer e al rilevamento automatico della tara.
Collega il tuo iPhone, Apple Watch (in arrivo anche per Android) con Jimmy!
Tira fuori il genio del caffè che è in te: le App IOS e Android (in arrivo) ti permetteranno di misurare la tua estrazione in tempo reale e con precisione e di guidarti così verso la perfezione. Jimmy registrerà automaticamente i dati storici di tutti i tuoi caffè/pour-over. Capire il tuo caffè e ottenere una fantastica estrazione e resa in tazza non è mai stato così semplice!

Scale jimmy

The new all-in-one smart scale is perfect for both espresso and pour-overs.
You can decide to detach the display, which is magnetic, and you can attach it wherever you want. You are now able to monitor the scale away from the machine.
With the best hardware of any scale on the market and with a 32-Bit processor, Jimmy allows you to work with new advanced features. Among its features there are excellent sensitivity and responsiveness. Jimmy is water resistant and has a duration of up to 10 hours of detached usage and 1000 hours of standby time.
Super automatic, you can customize the modes of use by making an extraction a unique and perfect experience, without interruptions thanks to the auto-tare and auto start timer.
Connect Jimmy with your iPhone, Apple Watch (coming also for Android)!
Bring out the coffee geek in you: the IOS and Android (coming soon) Apps will allow you to measure your extraction in real time and with precision and to guide you towards perfection.
Jimmy will automatically record the historical data of all your espresso shot and pour-overs.
Understanding your coffee and achieving consistency for the best cup has never been easier!

200317
Tazzina Caffè
Milano Bianca

Coffee Cup
Milano White

200303
Piattino Caffè
MI/Ischia/GE/AO Nero

Coffee Saucer
MI/Ischia/GE/AO Black

200329
Tazzina Caffè
Genova Bianca

Coffee Cup
Genova White

200319
Tazzina Caffè
Milano Rossa

Coffee Cup
Milano Red

200306
Tazzina Caffè
Ischia bianca

Coffee Cup
Ischia White

200325
Tazzina Caffè
Genova Rossa

Coffee Cup
Genova Red

200335
Piattino Caffè
MI/Ischia/GE/AO Bianco

Coffee Saucer
MI/Ischia/GE/AO White

200320
Piattino Caffè
MI/Ischia/GE/AO Rosso

Coffee Saucer
MI/Ischia/GE/AO Red

200302
Tazzina Caffè
Milano Nera

Coffee Cup
Milano Black

200321
Tazzina Caffè
Genova Nera

Coffee Cup
Genova Black

200336
Tazza Cappuccino
Milano Bianca

Cappuccino Cup
Milano White

200313
Tazza Cappuccino
Milano Rossa

Cappuccino Cup
Milano Red

200308
Tazza Cappuccino
Genova Bianca

Cappuccino Cup
Genova White

200312
Tazza Cappuccino
Genova Rossa

Cappuccino Cup
Genova Red

200318
Piattino Cappuccino
MI/Ischia/GE/AO Bianco

Cappuccino Saucer
MI/Ischia/GE/AO White

200310
Tazza Cappuccino
Aosta Rossa

Cappuccino Cup
Aosta Red

200315
Tazza Cappuccino
Genova Nera

Cappuccino Cup
Genova Black

200314
Piattino Cappuccino
MI/Ischia/GE/AO Rosso

Cappuccino Saucer
MI/Ischia/GE/AO Red

200300
Tazza Cappuccino
Milano Nera

Cappuccino Cup
Milano Black

200301
Piattino Cappuccino
MI/Ischia/GE/AO Nero

Cappuccino Saucer
MI/Ischia/GE/AO Black

200337
Tazza Colazione
Milano Bianca

Breakfast Cup
Milano White

200331
Tazza Colazione
Genova Bianca

Breakfast Cup
Genova White

200338
Piattino Colazione
MI/Ischia/GE/AO Bianco

Breakfast Saucer
MI/Ischia/GE/AO White

200304
Tazza Colazione
Milano Nera

Breakfast Cup
Milano Black

200323
Tazza Colazione
Genova Nera

Breakfast Cup
Genova Black

200324
Piattino Colazione
MI/Ischia/GE/AO Nero

Breakfast Saucer
MI/Ischia/GE/AO Black

200333
Tazza Colazione
Milano Rossa

Breakfast Cup
Milano Red

200334
Piattino Colazione
MI/Ischia/GE/AO Rosso

Breakfast Saucer
MI/Ischia/GE/AO Red

700045
Zuccheriera Inox

Stainless Steel
Sugar Box

621000

Coffee Pot & Dripper Set 400 ml

621004

Waterdrip Coffee Server 440 ml

621001

Coffee Pot & Dripper Set 600 ml

621005

Waterdrip Coffee Server (UHURU) 440 ml

621002

Coffee Pot & Dripper Set (Barafu) 600 ml

621006

Coffee Press 480 ml

621003

Coffee Carafe & Dripper Set 600 ml

701080
Spazzolino Multiuso

Coffeetool LP

701085
Scavolino Small

Steam Wand Cleaning Brush Small

701081
Ricambio Spazzolino (3 pezzi)

Replacement Bristle (3 pieces)

701082
Chiave Caffeina

Caffeine Wrench

701083
Spazzolino Macinino

Grindminder

701084
Scavolino Large

Steam Wand Cleaning Brush Large

Foro di installazione
Installation hole : ø 120mm

615795 Sistema Pulizia Pro-Fondi ø58- ø53/Cleaning System Pro-Fondi ø58 - ø53
615795/11 Sistema Pulizia Pro-Fondi ø58- ø53 Volt110/Cleaning System Pro-Fondi ø58 - ø53 Volt 110

- Ottimizza la pulizia del filtro migliorando il risultato in tazza (da test eseguiti in laboratori di importanti torrefazioni)
- Evita di sporcare la pedana
- Evita il rumore della battuta migliorando il comfort acustico del vostro locale
- Riduce la sostituzione dei filtri e l'abrasione delle guarnizioni
- Elimina gli interventi di riparazioni e sostituzioni di cassetti battifondi
- Più veloce della classica battuta
- Evita traumi al tunnel carpale e avambraccio dovuti alla battuta
- Raccoglie e smaltisce i fondi in modo igienico
- Di facile e veloce pulizia non necessita di manutenzioni particolari
- Evita l'ingombro del vecchio cassetto verso l'operatore
- Raccoglie grandi quantità di fondi nello stesso sacchetto
- Evita la formazione di insetti causata dai fondi dispersi nel sotto pedana

- *Optimise cleaning of the filter thus improving results in the cup (from tests performed in the laboratories of leading coffee roasters)*
- *Avoids dirtying the base*
- *Avoids the noise from combing thus improving the acoustic comfort of your premises*
- *Avoids replacement of the filters and abrasion of the units*
- *Avoids repairs and replacements of coffee grounds drawers*
- *Quicker than traditional combing*
- *Avoids discomfort to the carpal tunnel*
- *Collects and disposes of the coffee grounds hygienically*
- *It does not require special cleaning or maintenance*
- *Avoids the old bulky drawer that hinders the operator*
- *Collects large quantities of grounds in the same bag*
- *Avoids the presence of insects caused by the grounds dispersed under the base*

615780
Spazzole giranti con molle per portafiltri ø53

Wheel with springs for filterholders ø53

615781
Spazzole giranti con molle per portafiltri ø58

Kit wheel with springs for filterholders ø58

615782
Kit molle contatto

Springs kit

615783
Kit molle girante

Wheel springs kit

615784
Trasformatore 12 Vdc 2A

Transformer 12 Vdc 2A

615920
Manopola Pressino
Alluminio Nera Lucida

Tamper Handle Allu. Black Shiny

615921
Manopola Pressino
Alluminio Rossa Opaca

Tamper Handle Allu. Red Matte

615922
Manopola Pressino
Alluminio Blu Cobalto
Opaca

Tamper Handle Allu. Blue Cobalt Matt

615923
Manopola Pressino
in Vernice Bianca

Tamper Handle Powder Coated White

615924
Manopola Pressino
in Vernice Tiffany

Tamper Handle Powder Tiffany

615925
Manopola Pressino
Legno Rosso Jarrah

Tamper Handle Wood Red Jarrah

615926
Manopola Pressino Legno
Quercia Australiana

Tamper Handle Australian Oak Timber

615927
Manopola Pressino
Legno a Scacchi

Tamper Handle Timber Checkerboard Design

615928
Manopola Pressino
Legno Ulivo

Tamper Handle in Olive Timber

615929
Base Pressino ø 58 Flat

Tamper Base ø 58 Flat

615930
Base Pressino ø 58,30
Flat per E61

Tamper Base ø 58 Flat for E61

615931
Base Pressino "Big Step"

Tamper Base "Big Step"

615932
Base Pressino ø 53 Flat

Tamper Base ø 53 Flat

615933
Kit 6 Basi per Pressino

6 Bases Kit for Tamper

615934
Manopola Portafiltro
Legno Ulivo

Filterholder Handle Olive

615935
Manopola Portafiltro
Legno Jarrah

Filterholder Handle Wood Jarrah

615936
Manopola Portafiltro
Legno a Scacchi

Filterholder Handle Timber Checker

615937
Manopola Portafiltro
Legno Quercia
Australiana

Filterholder Handle Australian Oak

615938
Manopola Portafiltro
Legno Zebrato

Filterholder Handle Timber Zebrato

615939
Accessorio distribuz. caffe
"The Chisel"

Redistribution tool "The Chisel"

516264

Misurino inox 7gr

Stainless steel coffee spoon 7 gr

620245

Termometro infrarossi
-50 °C+380 °C 0,8"

Infrared thermometer
-50 °C+380 °C 0,8"

516264/P

Misurino plastica 7gr

Plastic coffee spoon 7 gr

620244

Termometro digitale
-50 °C+300 °

Digital thermometer
-50 °C+300 °

701011

Bicchierino pirex con dosi

Pirex lined shot glass

615793

Rifrattometro Digitale

CARATTERISTICHE
1. In grado di misurare e gestire anche le minime differenze di concentrazione: mostra fino al 2 ° decimale
2. La misurazione stabile e affidabile anche da caffè caldo appena fatto: rileva automaticamente la stabilità della temperatura
3. Design igienico: può essere lavato completamente sotto l'acqua corrente

SPECIFICHE TECNICHE
• Modello: PAL-caffè (BX / TDS)
• Scala: Temperatura Brix TDS
• Gamma di misura: Brix: da 0.00 a 25.00%; TDS: 0,00-22,00%; Temperatura: 10.0 a 100 ° C
• Risoluzione: Brix: 0,01%; TDS: 0,01%; Temperatura: 0.1 °C
• Precisione di misura: Brix: ± 0,10%; TDS: ± 0,15%; Temperatura: ± 1 °C
• gamma di compensazione di temperatura: da 10 a 100 °C
• Temperatura ambiente: da 10 a 40 °C
• Volume del campione: Almeno 0,3 ml
• Tempo di misura: Circa. 5 secondi - 120 secondi di misurazione continua
• Alimentazione: 2 batterie alcaline AAA
• Durata della batteria: misura fino a circa. 11.000 volte (se si utilizzano batterie alcaline)
• Classe di protezione internazionale: IP65 per polvere e protezione contro i getti d'acqua
• Dimensioni e peso: (Solo unità principale) 55 (W) x 31 (D) x 109 (H) mm, 100g

Digital Refractometer

CHARACTERISTICS
1. Able to measure and manage even the slightest differences in concentration: displays up to the 2nd decimal
2. Stable and reliable measurements even from freshly brewed, hot coffee: automatically detects temperature stability
3. Hygenic design: can be fully washed under running water

SPECIFICATIONS
• Model: PAL-COFFEE (BX/TDS)
• Scale: Brix TDS Temperature
• Measurement Range: Brix : 0.00 to 25.00%; TDS : 0.00 to 22.00%; Temperature : 10.0 to 100°C
• Resolution: Brix : 0.01%; TDS : 0.01%; Temperature : 0.1°C
• Measurement Accuracy: Brix : ±0.10%; TDS : ±0.15%; Temperature :±1°C
• Temperature compensation range: 10 to 100°C
• Ambient Temperature: 10 to 40°C
• Sample Volume: At least 0.3ml
• Measurement Time: Approx. 5 seconds - 120 seconds of continuous measurement
• Power Supply: Two (2) AAA alkaline batteries
• Battery Life: Approx. 11,000 times measurement (when alkaline batteries are used)
• International Protection Class: IP65 Dust-tight and Protected against water jets
• Dimensions & Weight: 55(W) x 31(D) x 109(H)mm, 100g (main unit only)

701038

Spazzolino 'Smart'

'Smart' brush

701038/N

Spazzolino nero 'Smart'

brush 'Smart' black

701009

Spazzola acciaio

Stainless steel brush

701009/4

Spazzola acciaio
setole L.40mm

Stainless steel brush
bristles L.40mm

701045

Spazzolino grande

Big brush

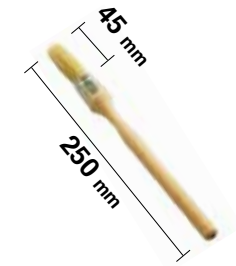

701013

Pennello pulizia macinacaffè

Grinder cleaning brush

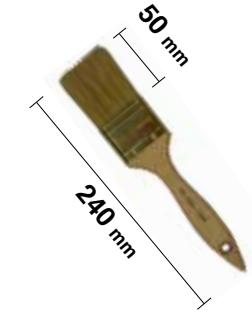

701048

Pennello L.50mm

Brush L.50mm

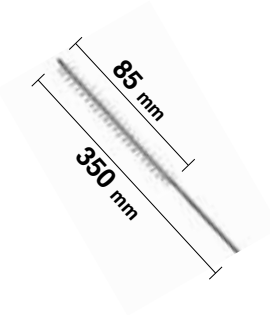

701040

Scovolino pulizia beccuccio

Spout brush

521901 standard ø58 mm
700487 San Marco ø53 mm
703535 Spaziale ø53 mm

Filtro cieco per Clean Express

Blind filter basket for Clean Express

700613

Disco gomma Clean Express

Rubber disc for Clean Express

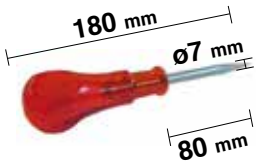

701007

Punteruolo 80x7 mm

Awl 80x7 mm

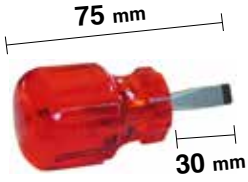

701008

Cacciavite nano a taglio

Miniature screwdriver

Portafiltro con manometro e entrata termometro.
Disegnato per controllare pressione e temperatura nel gruppo e permette di settare la dosatura senza usare il caffè.

Filter holder with manometer and thermometer connection
Designed to check the pressure and temperature in your group head and setting of the doses without using coffe.

620913 Aurora-Brugnetti
Brasilia gruppo B61
Conti
Faema (vecchi modelli / *old models*)
Futurmat-Ariete
620913/A Astoria
Bezzera
Brasilia
620913/AP Astoria 53 mm +4U
620913/C Cimbali
620913/CA Carimali
620913/DC Dalla Corte
620913/G Gaggia
620913/NS Nuova Simonelli
620913/R Rancilio
620913/SM San Marco
620913/SP Spaziale
620913/V BFC
ECM
Elektra
Faema (nuovi modelli / *new models*)
Isomac
La Marzocco
La Scala
Rocket
San remo
SV
Vibiemme
Wega

Termometro digitale
-50 °C+300 °C
Adatto al nostro portafiltro con manometro.

Digital thermometer
-50 °C+300 °C
Suitable for connection to our filter holder with manometer.

620204

Portafiltro con manometro.

Filter holder with manometer.

700113 Aurora-Brugnetti
Conti-Faema (vecchi modelli /*old models*)
Futurmat-Ariete
700113/A Astoria-Bezzera
Brasilia
700113/AP Astoria 53 mm +4U
700113/C Cimbali
700113/CA Carimali
700113/G Gaggia
700113/NS Nuova Simonelli
700113/P Pavoni
700113/SM San Marco
700113/SP Spaziale
700113/V Faema (nuovi modelli / *new models*)
Elektra
La Marzocco-La Scala
Rancilio-San Remo
SV-Vibiemme-Wega

700148/Z

620437

Base in acciaio inox con barra battifondi
Dimensioni 250x375x85 mm

Heavy stainless steel base drawer with knock bar
Size 250x375x85 mm

622004

Barra gommata battifondi
Dimensioni ø30x240 mm

Knock box bar
Size ø30x240 mm

620436

Cassetto in acciaio inox con barra battifondi
Dimensioni cassetto 350x405x132 mm
Foratura 350x130 mm

Stainless steel drawer with knock bar
Drawer size 350x405x132 mm
Gap size 350x130 mm

620259

Cuscinetto completo per cassetto in acciaio inox

Complete bearing for stainless steel drawer

622005 ø35x300 mm
622006 ø35x325 mm
622007 ø35x350 mm

Barra gommata battifondi

Knock box bar

620246

Contenitore battifondi acciaio 4"
Dimensioni 153x140x105h mm

Stainless steel knock box 4"
Size 153x140x105h mm

620247

Contenitore battifondi acciaio 6"
Dimensioni 153x140x150h mm

Stainless steel knock box 6"
Size 153x140x150h mm

620210

Cassetto battifondi basculante fondo chiuso
Dimensioni 345 x 277 mm

Knock box closed bottom
Dimension 345 x 277 mm

620211

Cassetto battifondi basculante fondo aperto
Dimensioni 345 x 277 mm

Knock box open bottom
Dimension 345 x 277 mm

620241

Bastone battifondi
Dimensioni ø 40 x 320 mm

Knock box bar
Size ø 40 x 320 mm

PORTAFILTRI SENZA FONDO INCLUSI DI FILTRO

Complete naked filter holders

300214/N Conti

Portafiltro senza fondo 21gr
Naked filter holder 21gr

526757

Filtro
Filter

460016/N Aurora
Bfc
Ecm
Elektra
Faema
Futurmat- Ariete
La Scala
Marzocco
Sanremo
Sv Italia
Vibiemme
Wega

Portafiltro senza fondo 21gr
Naked filter holder 21gr

526757

Filtro
Filter

573525/N Faema
(old)

Portafiltro senza fondo 21gr
Naked filter holder 21gr

526757

Filtro
Filter

573525/LMN Wega

Portafiltro senza fondo 21gr
Naked filter holder 21gr

526757

Filtro
Filter

700249/N Cimbali

Portafiltro senza fondo 21gr
Naked filter holder 21gr

526757

Filtro
Filter

700399/N San Marco

Portafiltro senza fondo 21gr
Naked filter holder 21gr

526405/A

Filtro
Filter

700565/N Gaggia

Portafiltro senza fondo 21gr
Naked filter holder 21gr

700256

Filtro
Filter

700721/N Astoria
Brasilia
Bezzera

Portafiltro senza fondo 21gr
Naked filter holder 21gr

526757

Filtro
Filter

700804/N Pavoni

Portafiltro senza fondo 21gr
Naked filter holder 21gr

526757

Filtro
Filter

PORTAFILTRI SENZA FONDO INCLUSI DI FILTRO

Complete naked filter holders

700299/N Rancilio

Portafiltro senza fondo 21gr
Naked filter holder 21gr

526757

Filtro
Filter

703815/N Carimali

Portafiltro senza fondo 21gr
Naked filter holder 21gr

526202

Filtro
Filter

703200/N Spaziale
700721/AP Astoria+4U

Portafiltro senza fondo 14gr
Naked filter holder 14gr

526207

Filtro
Filter

705107 Dalla Corte

Portafiltro senza fondo 21gr
Naked filter holder 21gr

526405/A

Filtro
Filter

703414/N Nuova Simonelli

Portafiltro senza fondo 21gr
Naked filter holder 21gr

526757

Filtro
Filter

620651/N Aurora
Bfc
Ecm
Elektra
Futurmat- Ariete
La Scala
Marzocco
Rancilio
Sanremo
Sv Italia
Vibiemme
Wega

Portafiltro senza fondo 42gr
Naked filter holder 42gr

620652

Filtro
Filter

701854/N Pavoni

Portafiltro cromato senza fondo tipo nuovo
Naked filter holder (new type)

701851

Filtro
Filter

PORTAFILTRO CIALDE E PORTAFILTRO TEFLONATO

Filter Holder for Pods and Teflon Coated Filter Holder

620190	Aurora - Brugnetti
	Brasilia gruppo B61
	Conti - Faema (vecchi modelli)
	Futurmat - Ariete
620190/A	Astoria - Bezzera
	Brasilia - Gruppo BE
620190/AP	Astoria 53 mm
620190/C	Cimbali
620190/CA	Carimali
620190/DC	Dalla Corte
620190/G	Gaggia
620190/LM	La Marzocco
620190/NS	Nuova Simonelli
620190/P	Pavoni
620190/R	Reneka
620190/SM	San Marco
620190/SP	Spaziale
620190/V	Faema (nuovi modelli)
	Rancilio - La Scala
	San Remo - SV
	Vibiemme - Wega

620901	Aurora-Brugnetti
	Faema (vecchi modelli)
	Futurmat
620902	Astoria
	Bezzera
	Brasilia
620903	Cimbali
620904	Carimali
620905	Gaggia
620906	Nuova Simonelli
620907	Pavoni
620908	Spaziale
620909	San Marco
620910	Rancilio
	Rocket
	Elektra
620911	Faema (nuovi modelli)
	BFC
	La Scala
	San Remo
	Wega
	Vibiemme
620912	Conti

Portafiltro per capsule
Capsule filter holder

620922	Astoria- Brasilia - Bezzera
620924	Cimbali
620925	La Spaziale
620926	La Pavoni
620927	Faema - Casadio
620928	Gaggia - Saeco
620929	San Marco
620929/L	San Marco a leva
620930	Nuova Simonelli
620931	Dalla Corte
620932	Carimali
620935	Astoria 53mm

Portafiltro per capsule bidose
Capsule filter holder bidose

620933	BFC - Brasilia - Brugnetti - Futurmat - Marzocco - La Scala San Remo - SV - Vibiemme - Wega
620934	Astoria - Brasilia - Bezzera
620936	Cimbali

Portafiltro per capsule con valvola
Capsule filter holder with valve

620922/V	Astoria - Brasilia - Bezzera
620924/V	Cimbali
620925/V	La Spaziale
620927/V	Faema
620928/V	Gaggia - Saeco
620929/V	San Marco
620929/LV	San Marco a Leva
620930/V	Nuova Simonelli
620931/V	Dalla Corte
620932/V	Carimali

Portafiltro per capsule Segrafedo
Segafredo Capsule filter holder

620921/S	Brugnetti - Cime - La Marzocco - La Scale - Sanremo - SV Italia - Vibiemme - Wega
620922/S	Astoria-Brasilia-Bezzera
620923/S	Elektra-Rancilio-Rocket
620924/S	Cimbali
620925/S	La Spaziale
620926/S	La Pavoni
620927/S	Brasilia B61-Faema-Futurmat
620930/S	Nuova Simonelli
620935/S	Astoria 53mm P4U

Portafiltro per capsule new

Capsule filter holder new

Per: BFC - Brugnetti - La Scala - Rancilio - San Remo - SV ITALIA - Vibiemme - Wega

620947 Capsula singola
620948 Capsula singola con beccuccio singolo
620946 Capsula doppia con beccuccio singolo
620945 Capsula doppia con beccuccio doppio

Per: Faema

620949 Capsula singola

Per: Marzocco - Synesso - Slayer

620943 Capsula doppia

Per: La Spaziale

620954 Capsula singola per portadoccia H11
620951 Capsula singola per portadoccia H13

Per: Cimbali

620955 Capsula singola

Per: BFC - Brugnetti - La Scala - Rancilio - an Remo - SV ITALIA - Vibiemme Wega

620947/V Capsula singola con valvola
620948/V Capsula singola con valvola beccuccio singolo
620946/V Capsula doppia con valvola beccuccio singolo
620945/V Capsula doppia con valvola beccuccio doppio

Per: Faema

620949/V Capsula singola con valvola

Per: Marzocco - Synesso - Slayer

620942/V Capsula singola con valvola
620943/V Capsula doppia con valvola

Per: La Spaziale

620954/V Capsula singola con valvola per portadoccia H11 mm.
620951/V Capsula singola con valvola per portadoccia H13 mm.

Per: Cimbali

620955/V Capsula singola con valvola

Il kit contiene tutti gli strumenti necessari al venditore di caffè.

The kit has all the tools a coffee salesman requires.

701075 Kit Professionale Coffee Test	Aurora Brugnetti Faema Rancilio
701075/A Kit Professionale Coffee Test	Astoria Bezzera Brasilia
701075/C Kit Professionale Coffee Test	Cimbali
701075/CA Kit Professionale Coffee Test	Carimali
701075/G Kit Professionale Coffee Test	Gaggia
701075/NS Kit Professionale Coffee Test	Nuova Simonelli
701075/P Kit Professionale Coffee Test	Pavoni
701075/SM Kit Professionale Coffee Test	San Marco
701075/SP Kit Professionale Coffee Test	Spaziale
701075/V Kit Professionale Coffee Test	BFC Brasilia CS Fiorenzato Faema Futurmat La Marzocco La Scala Rancilio Vibiemme Wega

I codici sono determinati dal portafiltro con manometro adatto al modello di macchina da caffè
Il kit contiene: un bicchierino graduato in pirex, un termometro, una bilancina digitale, un portafiltro con manometro, entrata termometro e dosatura, un pressino in plastica, un misurino in plastica, uno spazzolino 'Smart', un filtro cieco, un barattolo clean express in pastiglie e un kit prova durezza.

Codes are related to the suitable filter holder with manometer for your espresso machine.

The kit includes: a pirex shot glass, a thermometer, a digital scale, a filter holder with manometer,
thermometer connection and dose, a plastic tamper, a plastic spoon, a 'Smart' brush, a blind filter, a tub of Clean Express tablets and a water hardness test kit.

Coffee Bean Roasting System

702507

Mixing	Off-axis rotation system (radiant heat)
Heating	Convection
Cooling	Normal temperature forced blow (approx 10 min)
Temperature range	190 - 250 °C
Temperature control	0 - 250 °C by an electronic thermostat
Heater capacity	1000W
Power source	AC 100V-110V-120V-220V-230V-240V- 50/60 Hz
Consumption current	1000W
Chamber materials	Heat resistant glass tube (pyrex)
Chamber capacity	300g (max 350g) - 8.8oz (max 10oz)
Noise	65 dB
Dimension	383 x 243 x 229 mm (15 x 9.6 x 9 inches)
Net weight	5.5kg (12lb)
Colour	Black

- Spare part

502004 Filter Assembly

Patented 3D rotation
Gene Café's unique mixing rotation system features off-axis roatation to ensure even distribution of the beans and better heat circulation during the roasting process.

Removable bisected roasting chamber
The divided roasting chamber efficiently distributes the beans as they roast. Ensuring even heat flow and efficient cooling. Gene Café roasters come with a chamber stand to safely and securly hold the chamber upright for convinient filling and cleaning.

High efficiency chaff removal
Perforations in the roasting chamber divider panel help to gently remove chaff, a thin membrane surrounding the bean, and whisk it away into a spacious collection chamber that is easy to detach and empty.

Fast response heat control
A simple dial provides precise control over the nickel chrome coil heater for accurate roasting temperature while an LED display shows both the set and actual temperatures.

Dynamic roasting and cooling
A second control knob makes it a snap to change the roasting cycle time on the fly. Manually switching from roasting to cooling is as easy as pressing a button. Digital displays show roasting time and cooling status.

Automatic cooling function
The Gene Café automatically switches from roasting to cooling, and temperature sensors control the cooling process. An audible tone lets you know when the cooling cycle has completed.

Cybernetic sensor safety system
In the event that the Gene café's roasting temperature exceeds a preset upper limit, the heater will automatically shut off.

Full range roasting
Gene Café can roast beans to any of the eight roast levels commonly referred to by coffee roasting professionals: Light, Cinnamon, Medium, High, City, Full City, French and Italian.

At home on the kitchen counter
Sleek Eurostyle design and a small footprint make the Gene Caffé an attractive addition to any kitchen or showroom.

Clear roasting chamber and safety cover
Being able to see the beans during roasting makes it easy to tell when you want to make time or temperature changes on the fly.
The hinged safety cover helps to isolate the roasting chamber.

Coffee Queen Original

702515

Macchina per caffè a filtro con sistema di riempimento manuale con 2 piastre caldi e 2 caraffe incluse.

The brewer has manual water filling system con 2 hotplates and 2 serving decanters included.

Capacità	circa 12 tazze in 6 minuti circa 15 Lt/h
Alimentazione	230V - 2390W
Connessione Acqua	Acqua Fredda 1/2" R
Dimensioni	205 x 360 x 430 mm
	Approx 12 cups in 6 minutes
Capacity	*Approx 15 Lt/h*
	230V - 2390W
Power Supply	*Cold Water 1/2" R*
Water Connec-	*205 x 360 x 430 mm*

702516 Confezione Filtri Carta - 1000 pezzi - Ø110 mm

Paper Filters Pack - 1000 pieces - Ø110 mm

702517 Caraffa in Vetro 1,8 Lt

Glass Decanter 1.8 Lt

702688 Macinacaffè M2D Programmabile Micrometrico
Motore 230V/50Hz 150W 1400 rpm - **Macine** Piana ø 50 mm
Produttività 3,5 kg/h - **Capacità campana** 250 g
Peso 4,8 kg - **Dimensioni** 152 x 250 x h382 mm
Una dose programmabile - Forcella regolabile in altezza

702688 M2D Programmable Coffee Grinder Stepless Adjustment System
Motor *230V/50Hz 150W 1400 rpm* - ***Blades*** *Flat ø 50 mm*
Productivity *3,5 kg/h* - ***Hopper Capacity*** *250 g*
Weight *4,8 kg* - ***Dimensions*** *152 x 250 x h382 mm*
One dose programmable - Height adjustable fork

- ***702688/C*** *Colour* ***C83 Chrome***
- ***702688/W*** *Colour* ***C05 White***
- ***702688*** *Colour* ***C10 Grey***
- ***702688/N*** *Colour* ***C18 Black***
- ***702688/G*** *Colour* ***C21 Yellow***
- ***702688/R*** *Colour* ***C23 Red***
- ***702688/A*** *Colour* ***C32 Orange***
- ***702688/B*** *Colour* ***C38 Blue***
- ***702688/V*** *Colour* ***C50 Green***

702689 Macinacaffè M42D "On Demand" Micrometrico
Motore 230V/50Hz 250W 1400 rpm
Macine Piana ø 58 mm
Produttività 7,2 kg/h - **Capacità campana** 500 g
Peso 7,5 kg - **Dimensioni** 194 x 308 x h430 mm
Regolazione Micrometrica - Tre dosi programmabili
Dosatura manuale - Dispositivo contadosi

702689 M42D Coffee Grinder "On demand" stepless Adjustment System
Motor *230V/50Hz 250W 1400 rpm*
Blades *Flat ø 58 mm*
Productivity *7,2 kg/h* - ***Hopper Capacity*** *500 g*
Weight *7,5 kg* - ***Dimensions*** *194 x 308 x h430 mm*
Stepless adjustment system - Three doses programmable
Manual dosing - Dosing counter

702685 Macinacaffè M7D "On Demand" Micrometrico
Motore 230V/50Hz 800W 350 rpm
Macine Coniche Ø 68 mm
Produttività 16 kg/h - **Capacità campana** 1,4 kg
Peso 16 kg - **Dimensioni** 250 x 360 x h635 mm
Regolazione micrometrica - Tre dosi programmabili
Dosatura manuale - Dispositivo contadosi

702685 M7D Coffee Grinder "On Demand" Stepless Adjustment System
Motor *230V/50Hz 800W 350 rpm*
Blades *Conical Ø 68 mm*
Productivity *16 kg/h* - ***Hopper Capacity*** *1,4 kg*
Weight *16 kg* - ***Dimensions*** *250 x 360 x h635 mm*
Stepless adjustment system - Three doses programmable
Manual dosing - Dosing counter

702681 Macinacaffè MXD "On Demand" Micrometrico
Motore 230V/50Hz 340W 1400 rpm
Macine Piana ø 75 mm
Produttività 10 kg/h - **Capacità campana** 1,4 kg
Peso 11 kg - **Dimensioni** 230 x 370 x h600 mm
Regolazione micrometrica - Tre dosi programmabili
Dosatura manuale - Dispositivo contadosi

702681 MXD Coffee Grinder "On Demand" Stepless Adjustment System
Motor *230V/50Hz 340W 1400 rpm*
Blades *Flat ø 75 mm*
Productivity *10 kg/h* - ***Hopper Capacity*** *1,4 Kg*
Weight *11 kg* - ***Dimensions*** *230 x 370 x h600 mm*
Stepless adjustment system - Three doses programmable
Manual dosing - Dosing counter

702871 Pressino dinamometrico professional

702871 Dynamometric tamper professional

702834 Pressino dinamometrico professional CPS twist

702834 Dynamometric tamper professional CPS twist

702005 Macinadosatore HC600 Automatico Grigio
702006 Macinadosatore HC600 Automatico Nero
702013 Macinadosatore HC600 Automatico Rosso
702548 Macinadosatore HC600 Automatico Bianco
Motore 230V -50Hz -550W -1600 rpm
Macine Piana ø 64 mm
Produttività 7-9 kg/h - **Capacità campana** 1,2 kg
Peso 14 kg - **Dimensioni** 210x330x600 mm
Consigliato per un consumo giornaliero di caffè di 3 kg.

702005 HC600 Grey Automatic Coffee Grinder
702006 HC600 Black Automatic Coffee Grinder
702013 HC600 Red Automatic Coffee Grinder
702548 HC600 White Automatic Coffee Grinder
Motor *230V - 50Hz -550W - 1600 rpm*
Blades *Flat ø 64 mm*
Productivity *7-9 kg/h* - ***Hopper Capacity*** *1,2 kg*
Weight *14 kg* - ***Dimensions*** *210x330x600 mm*
Recommended for 3 kg daily coffee consume.

702540 Macinadosatore HC700 Automatico Silver
702553 Macinadosatore HC700 Automatico Nero
Motore 230 -50Hz - V 350W - 1600 rpm
Macine Piana ø 64 mm
Produttività 4/18 kg/h - **Capacità campana** 1,2 kg
Peso 15 kg - **Dimensioni** 210x330x600 mm
Consigliato per un consumo giornaliero di caffè di 3-5 kg.

702540 HC700 Automatic Coffee Coffee Grinder Silver
702553 HC700 Automatic Coffee Coffee Grinder Black
Motor *230 -50Hz - V 350W - 1600 rpm*
Blades *Flat ø 64 mm*
Productivity *4/18 kg/h* - ***Hopper Capacity*** *1,2 kg*
Weight *15 kg* - ***Dimensions*** *210x330x600 mm*
Recommended for 3-5 kg daily coffee consume.

702555 Macinadosatore H5 Nero
Motore 230V- 50-60Hz- 350W
Macine Piana ø 64 mm
Produttività 4/6 kg/h - **Capacità campana** 0,25 kg
Peso 5 kg - **Dimensioni** 135x275x310 mm
Carrozzeria in plastica.
Consigliato per speciality coffee, decaffeinato e casa

702555 Coffee Grinder H5 Black
Motor *230V- 50-60Hz- 350W*
Blades *Flat ø 64 mm*
Productivity *4/6 kg/h* - ***Hopper Capacity*** *0,25 kg*
Weight *5 kg* - ***Dimensions*** *135x275x310 mm*
Recommended for specialty coffee,
decaffeinated and domestic use

702576 Macinacaffè HC 880 LAB Nero
Motore 230V-50Hz-550W
Macine Piana ø 84 mm
Produttività 13/16 kg/h - **Capacità campana** 2kg
Peso 26 kg - **Dimensioni** 180x450x685 mm
Vendita caffè consigliato al banco.

702576 HC 880 LAB Black Coffee Grinder
Motor *230V-50Hz-550W*
Blades *Flat ø 84mm*
Productivity *13/16 kg/h* - ***Hopper Capacity*** *2 kg*
Weight *26kg* - ***Dimensions*** *180x450x685 mm*
Ground coffee sales.

702575 Macinadosatore Major Elettronico
Motore 220V- 50Hz- 650W- 1400 rpm
Macine Piana ø 83 mm
Capacità campana 1,8 kg
Peso 20 kg - **Dimensioni** 240x455x635 mm
Ideale per consumi medio elevato.

702575 Coffee Grinder Major
Motor *220V- 50Hz- 650W- 1400 rpm*
Blades *Flat ø 83 mm*
Hopper Capacity *1,8 kg*
Weight *20 kg* - ***Dimensions*** *240x455x635 mm*
Suitable for medium/high consumption.

702510 Macinadosatore Automatico Silenzioso 64M Mito
Motore 220V-50Hz-250W-1400 rpm
Macine Piana ø 64 mm
Produttività 9 kg/h - **Capacità campana** 1 kg
Peso 13 kg - **Dimensioni** 550x210x370 mm
Consigliato per un consumo giornaliero di caffè di 5 kg.

702510/38 Macinadosatore Automatico Silenzioso 64M Mito 400V
Motore 400V-50Hz

702510 64M Mito Maxi Silent Automatic Coffee Grinder
Motor *220V-50Hz-250W-1400 rpm*
Blades *Flat ø 64 mm*
Productivity *9 kg/h* - ***Hopper Capacity*** *1 kg*
Weight *13 kg* - ***Dimensions*** *550x210x370 mm*
Recommended for 5 kg daily coffee consume.

702510/38 64M Mito 400V Maxi Silent Automatic Coffee Grinder
Motor *400V-50Hz*

702554 Macinino Mito Performance E Maxi
Motore 230V-50/60Hz 370W 900rpm
Macine Piana Ø 75mm
Produttività 11Kg/h - **Capacità campana** 1,5 kg
Peso 13 kg - **Dimensioni** 210x370x550 m

702554 Grinder Mito Performance E Maxi
Motor *230V-50/60Hz 370W 900rpm*
Blades *Flat ø 75 mm*
Productivity *11kg/h* - ***Hopper Capacity*** *1,5 kg*
Weight *13 kg* - ***Dimensions*** *210x370x550 mm*

702572 Macinino Mito "On Demand" M/64 V230/2
702573 Macinino Mito "On Demand" M/75 V230/2
Motore 230V-50/60Hz 350W 1400 rpm - 230V-50/60Hz 480W 1400 rpm
Macine Piana ø 64 mm - Piana ø 75 mm
Produttività 9 kg/h - 11 kg/h - **Capacità campana** 1,5 kg - 1,5 kg
Peso 13 kg - 13 kg - **Dimensioni** 550x210x370 mm - 550x210x370 mm

702572 Grinder Mito "On Demand" M/64 V230/2
702573 Grinder Mito "On Demand" M/75 V230/2
Motor *230V- 50/60Hz- 350W- 1400 rpm - 230V- 50/60Hz- 480W- 1400rpm*
Blades *Flat ø 64 mm - Flat ø 75 mm*
Productivity *9 kg/h - 11 kg/h* - ***Hopper Capacity*** *1,5 kg - 1,5 kg*
Weight *13 kg - 13 kg* - ***Dimensions*** *550x210x370 mm - 550x210x370 mm*

702574 Macinino Mito Touch
Motore 230V-50/60Hz 570W 1400 rpm
Macine Piana Ø 75mm
Produttività 11Kg/h - **Capacità campana** 1,5 kg
Peso 13 kg - **Dimensioni** 210x370x550 m

702574 Grinder Mito Touch
Motor *230V-50/60Hz 570W 1400 rpm*
Blades *Flat ø 75 mm*
Productivity *11kg/h* - ***Hopper Capacity*** *1,5 kg*
Weight *13 kg* - ***Dimensions*** *210x370x550 mm*

702495 Macinadosatore JUNIOR PRO "On Demand"
Motore 230V - 50-60Hz - 190W - 1400 rpm
Macine Piana Ø 50mm
Produttività 3Kg/h - **Capacità campana** 0,50 kg
Peso 6,5 kg - **Dimensioni** 150x360x260 m
Consigliato per piccoli ristoranti o per decaffeinato.

702495/11 Macinadosatore JUNIOR PRO "On Demand"
Motore 110V - 60Hz - 190W - 1400 rpm

702495 Grinder JUNIOR PRO "On Demand"
Motor *230V - 50-60Hz - 190W - 1400 rpm*
Blades *Flat ø 50 mm*
Productivity *3 kg/h* - ***Hopper Capacity*** *0.50 kg*
Weight *6,5 kg* - ***Dimensions*** *150x360x260 mm*
Recommended for small restaurants or decaffeinated coffee use.

702495/11 Grinder JUNIOR PRO "On Demand"
Motor *110V - 60Hz - 190W - 1400 rpm*

702503 ***'Lux'*** **Macinacaffè**
Motore 220/240V - 50Hz - 150W 1400rpm
Macine Coniche ø 38 mm - **Capacità campana** 0,2 kg
Peso 2 kg - **Dimensioni** 95x180x300 mm
Carrozzeria in acciaio inox.

702503 'Lux' Coffee Grinder
Motor *220/240V-50Hz-50W-1400 rpm*
Blades *Conical ø 38 mm* - ***Hopper Capacity*** *0.2 kg*
Weight *2 kg* - ***Dimensions*** *95x180x300 mm*
Stainless steel body.

200003

Espresso made in Italy 1901-1962
Dalla Collezione Enrico Maltoni prende forma la prima pubblicazione che ripercorre la storia della macchina da caffè espresso, dalla sua invezione ai modelli degli anni Sessanta, attraverso un secolo di evoluzione tecnica, formale e funzionale.

Espresso made in Italy 1901-1962
Enrico Maltoni's Collection gives shape to the first pubblication that traces the histrory of espresso coffee machine; from his invention to the 60's designs, through a century of technical and functional evolution.

200026

Faema Espresso 1945-2010
400 pagine con oltre 500 immagini.
Il primo libro al mondo che racconta la vera storia della Faema, dalle vicende personali a quelle strettamente aziendali, dalla sua fondazione ai giorni nostri.
Denso di fatti raccontati dopo avere raccolto le testimonianze di familiari e conoscenti del fondatore Carlo Ernesto Valente.
Brevetti, schede tecniche e depliant originali a corredo di immagini, inedite, delle bellissime e antiche macchine per caffè espresso Faema.

Faema Espresso 1945-2010
The first book that tells Faema's real story from its establishment till today, going through personal events to business ones.
The book is filled with stories about its foundator Carlo Ernesto Valente, told by his family and people that new him.
Patents, technical diagrams, original flyers together with unpublished photographs Faema's stunning vintage espresso coffee machines will visually guide you through the book.

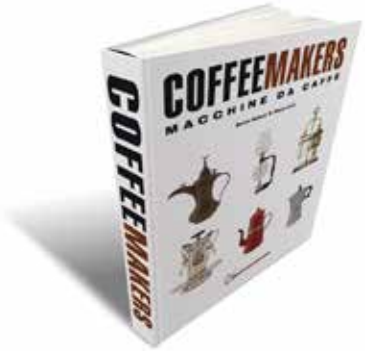

200079

Coffeemakers
Enciclopedia della caffettiera, opera unica nel suo genere per la mole di documentazione mostrata: 2700 immagini, 2080 descrizioni tecniche e numerosi testi divisi nei vari periodi storici. Tutte le tipologie di caffettiere realizzate fino ai nostri giorni, fotografate direttamente nelle case dei collezionisti di tutto il mondo

Coffeemakers
A unique encyclopaedia of coffee makers packed with information: 2700 images, 2080 technical descriptions and countless texts split into various historical periods. This book features all the different kinds of coffee makers produced to date, photographed in the homes of collectors from all over the world.

NUOVA RICAMBI srl

Via dei Mille 20
20061 Carugate (MI)

T +39 02 9253205
F +39 02 9254286

www.nuovaricambi.net • info@nuovaricambi.net

9 900000 146306