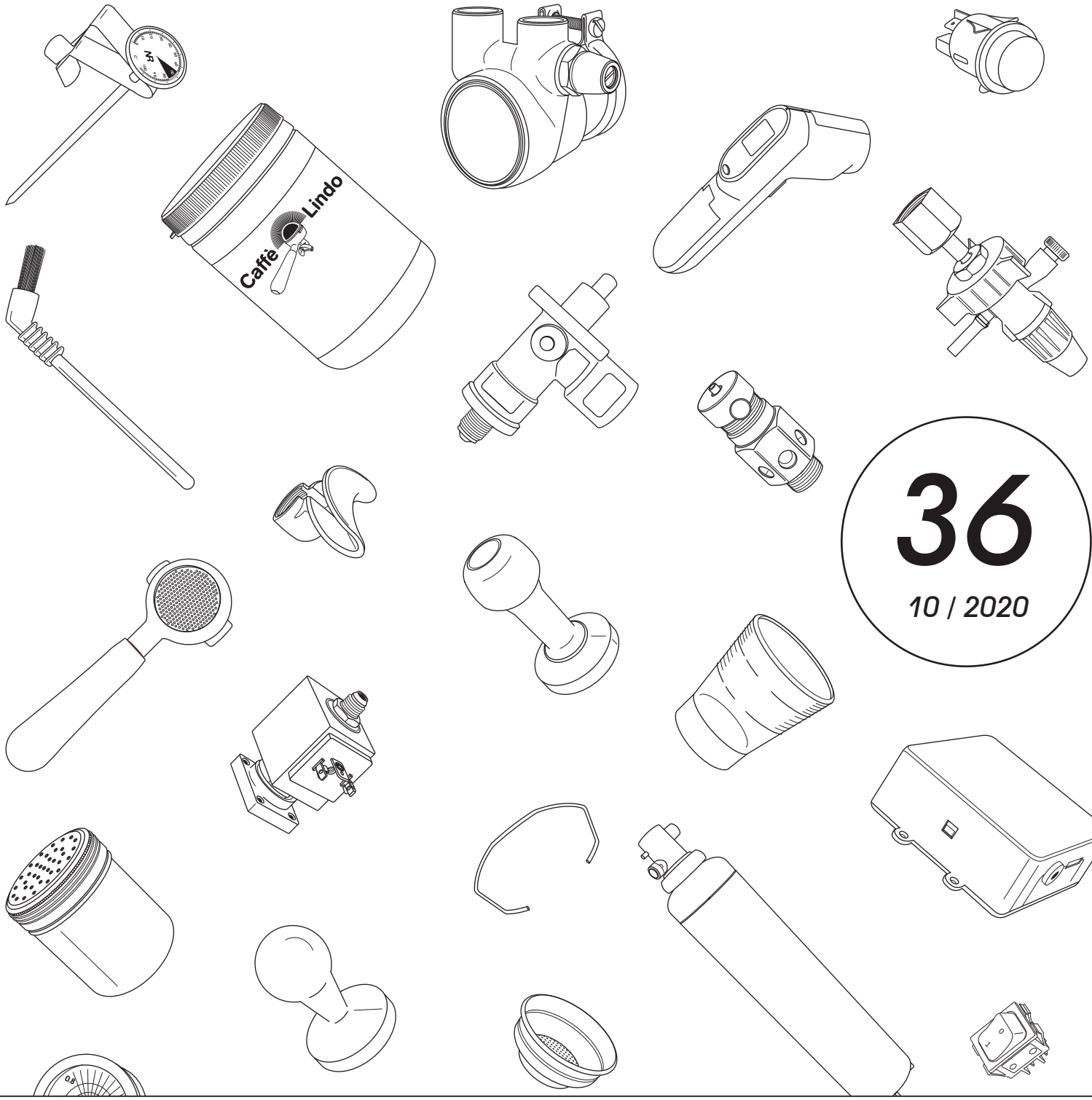

36

10 / 2020

NUOVA RICAMBI

CATALOGO RICAMBI

SPARE PARTS CATALOGUE • CATALOGUE PIÈCES DE RECHANGE
ERSATZTEILKATALOG • CATÁLOGO DE RECAMBIOS

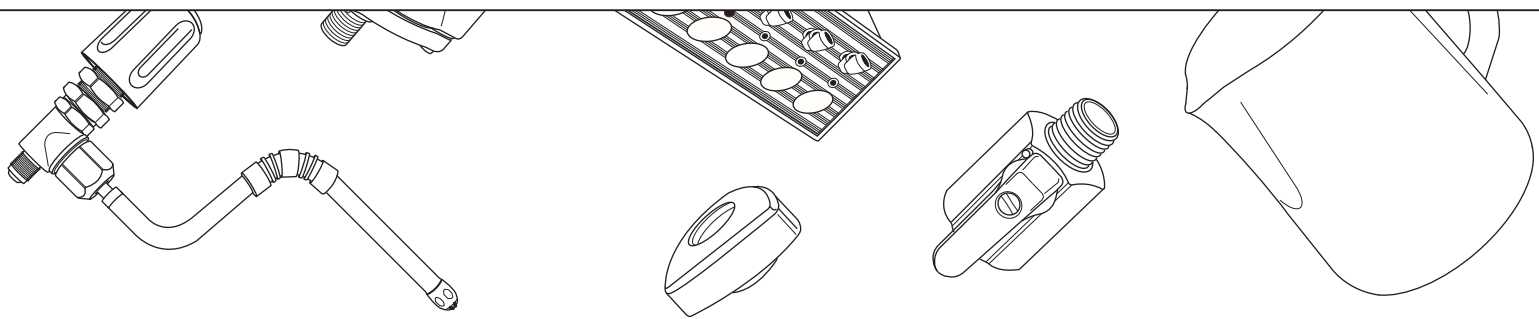

Avvertenze

1) Il presente listino annulla e sostituisce, a tutti gli effetti, i precedenti.
2) Ci riserviamo il diritto di variare in qualsiasi momento e senza alcun preavviso i prezzi del presente listino.
3) I prezzi sono da intendersi franco nostro magazzino e non comprendono oneri fiscali.
4) Spedizione in 24/48 ore.
5) Eventuali resi vanno preventivamente concordati ed autorizzati da Nuova Ricambi srl.

Remarques

1) Cette liste de prix annulle et substitue totalement les listes prŽcŽdentes.
2) Nous nous rŽservons le droit de changer ˆ nÕimporte quel moment et sans aucun prŽavis les prix de cette liste.
3) Les prix sont pour livraison dŽpart usine (ex-works).
4) ExpŽdition en 24/48 heures.
5) Tout retour de marchandise doit être autorisé par Nuova Ricambi srl.

Remarks

1) This price list cancels and replaces, in every respect, the previous ones.
2) We keep the right to change the prices of this list in whichever moment and without any warning.
3) The prices are given ex-works.
4) Delivery in 24/48 hours.
5) No return will be accepted without prior authorization by Nuova Ricambi srl.

Hinweise

1) Diese Preisliste annulliert und ersetzt, in jeder Hinsicht, die vorherigen Listen.
2) Wir behalten uns das Recht vor, jederzeit und ohne vorherige Benachrichtung, diese Preisliste zu Šndern.
3) Diese Preise verstehen sich ab Unser Werk (ex-works).
4) Versendung in 24/48 Stunden.
5) Jede WarenrŸcksendung mŸ§ von Nuova Ricambi srl ermŠchtigt werden.

MACCHINE CAFFE' • COFFEE MACHINES

Astoria /CMA ..... 3 - 14
Aurora- Brugnetti ..... 15 - 18
Bezzera ..... 19 - 28
BFC - ROYAL ..... 29 - 38
Brasilia ..... 39 - 51
Carimali ..... 52 - 57
Casadio ..... 58 - 64
Cimbali ..... 65 - 76
Cime ..... 77 - 83
Coffee Queen ..... 84 - 85
Conti ..... 86 - 92
Dalla Corte ..... 93 - 97
ECM ..... 98 - 105
ECM DE ..... 106 - 116
Elektra ..... 117 - 129
Expobar ..... 130 - 136
Faema ..... 137 - 169
Fiamma RST ..... 170 - 177
Futurmat - Ariete ..... 178 - 183
Gaggia ..... 184 - 191
Isomac ..... 192 - 193
La San Marco ..... 194 - 201
La Spaziale ..... 202 - 210
Nuova Simonelli ..... 211 - 221
Pavoni ..... 222 - 233
Profitec ..... 234 - 247
Promac ..... 248 - 252
Rancilio ..... 253 - 265
Sanremo ..... 266 - 273
Vibiemme ..... 274 - 285
Victoria Arduino ..... 286 - 293
Wega ..... 294 - 301

FABBRICATORI DI GHIACCIO • ICE MAKERS

Brema 302
Frimont - Faema 303
Simag - Faema 304

VARI • VARIOUS

Depuratori e filtri acqua *Softeners and water filters* ..... 305 - 314
Elettropompe - Pompe *Motor pumps - Pumps* ..... 315 - 318
Tubi *Pipes* ..... 319 - 320
Raccordi *Fittings* ..... 321 - 324
Cappuccinatori *Milk Frothers* 325
Portafiltri *Filter holders* ..... 326 - 329
Detergenti per macchine da caffè *Coffee machine cleaning products* ..... 330 - 332
Detergenti *Cleaning products* 333
Articoli manutenzione *Maintenance equipment* ..... 334 - 335
Componenti macchine caffè *Coffee machine's components* ..... 336 - 351

MACINADOSATORI • COFFEE GRINDERS

Anfim ..... 352 - 361
Bnz 362
Compak 363
Eureka ..... 364 - 372
Faema ..... 373 - 374
Fiorenzato ..... 375 - 376
H 5 377
HC 600 378
HC 700 379
Macap ..... 380 - 386
Mazzer ..... 387 - 394
Nuova Simonelli ..... 395 - 396
Obel ..... 397 - 401
Quamar ..... 402 - 405
Rancilio ..... 406 - 407
Rossi ..... 408 - 409
Lux-Delux 410
Vari Macinini - *Various Grinders* ..... 411 - 412
Elenco Macine - *Grindstones List* ..... 413 - 418

ACCESSORI • ACCESSORIES

EDO ..... 1 - 18
Cafelat ..... 19 - 24
Clockwork 25
Crema Pro ..... 26 - 27
HARIO ..... 28 - 30
HIROIA ..... 31 - 32
Ipa ..... 33 - 35
IWAKI 36
Pallo 37
Profondi ..... 38 - 39
Pulman ..... 40 - 41
Cassetti Battifondi *Knock Box Drawers* ..... 42 - 43
Coffee Bean Roasting System 44
Docce Competizione *Competition Shower* ..... 45 - 47
Filtri Competizione *Competition Filter* ..... 48 - 49
Lattiere - Accessori *Milk Jugs - Accessories* ..... 50 - 53
New Kit Professional Coffee Test 54
Portafiltro Cialde e Portafiltro Teflonato *Filter Holder for Pods and Teflon Coated Filter Holder* 55
Portafiltro con Manometro *Filter Holder with Manometer* 56
Portafiltri per capsule *Capsule Filter Holder* ..... 57 - 58
Portafiltri senza Fondo *Naked Filter Holders* ..... 59 - 60
Pressini *Tampers* 61
Strumenti di Misura *Measuring Accessories* ..... 62 - 63
Supporti Portafiltri *Filter Holder Support* 64
Macinadosatori *Coffee Grinders* ..... 65 - 70
Libri Collezione Enrico Maltoni *Enrico Maltoni Collection's Books* 71

ASTORIA / CMA

CALYPSO - CORE600 - DIVINA - GLORIA - GRETA - SABRINA
SIBILLA - TANYA - RAPALLO - GRUPPO 58 mm

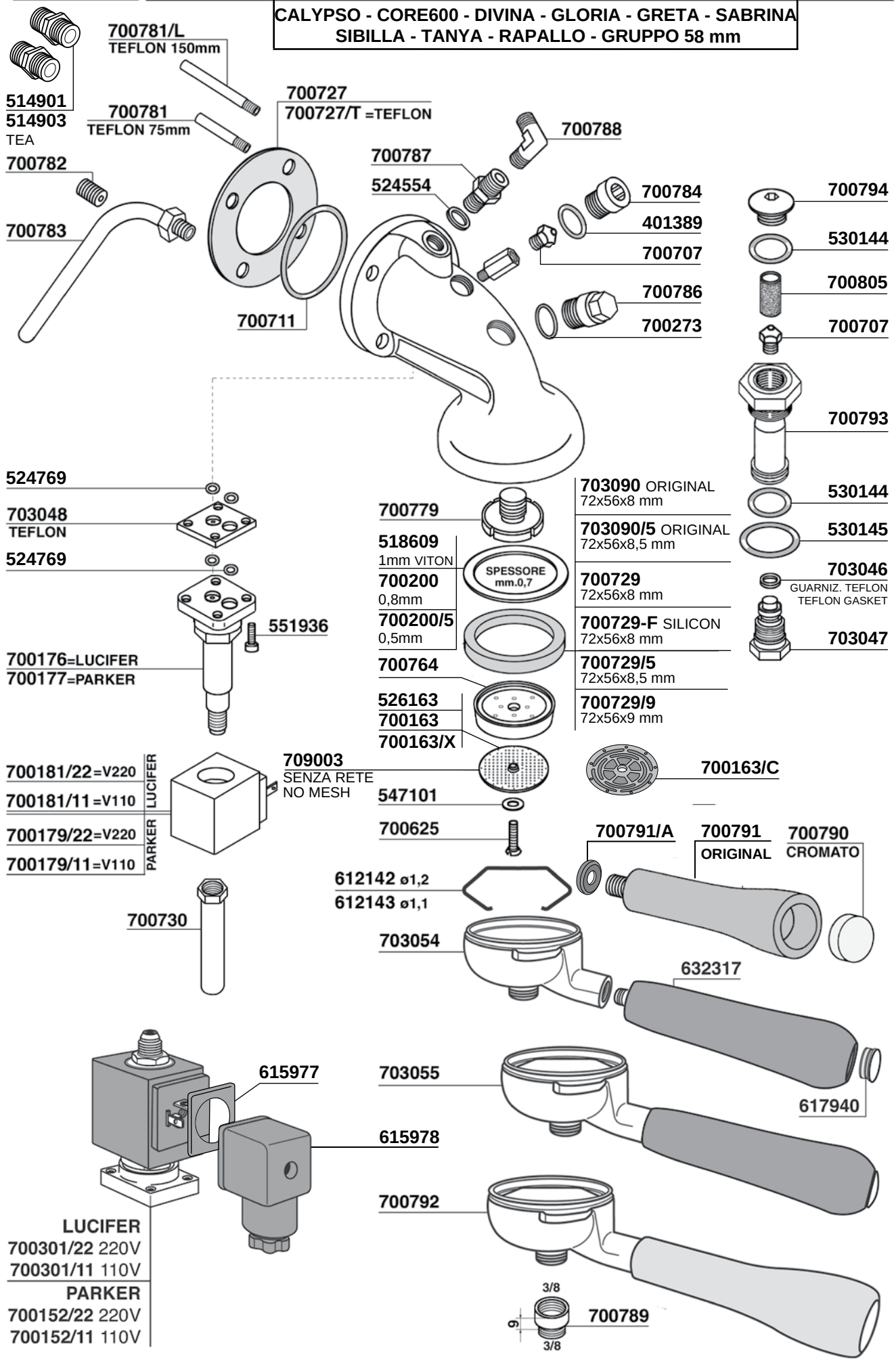

ASTORIA / CMA

GRUPPO 53 mm

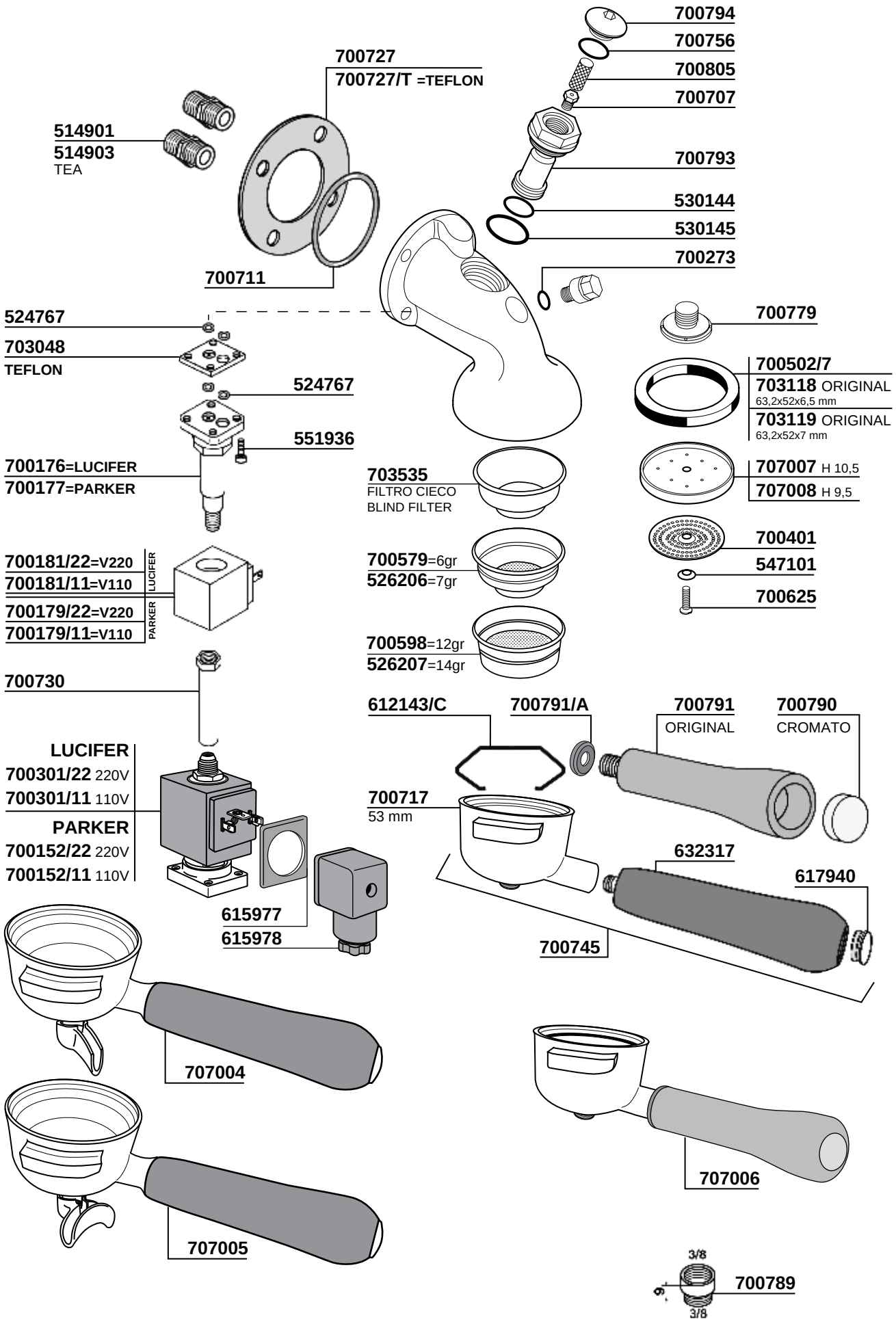

ASTORIA / CMA

ARGENTA - BRAVA - DORA - LISA - PRATIC

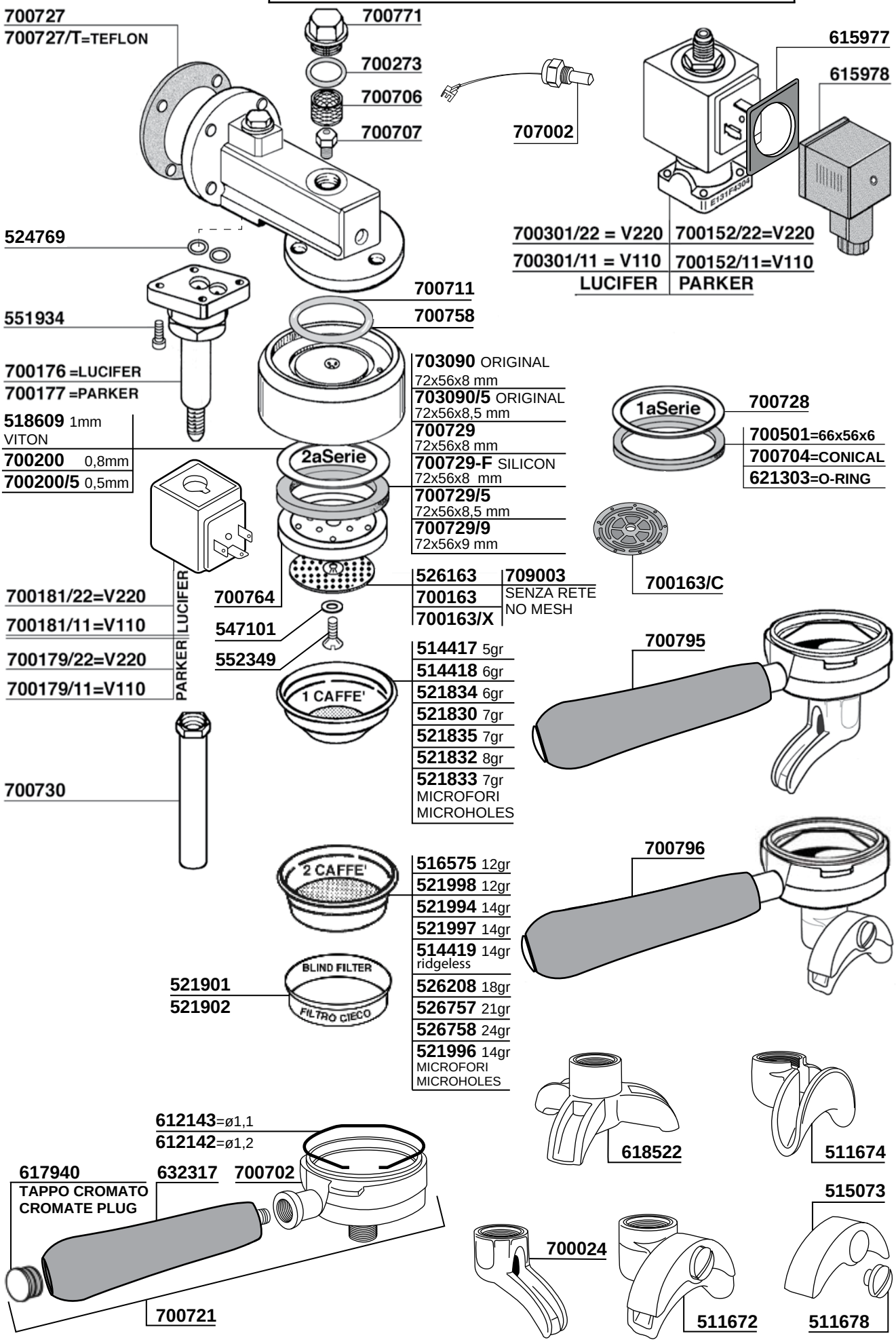

6

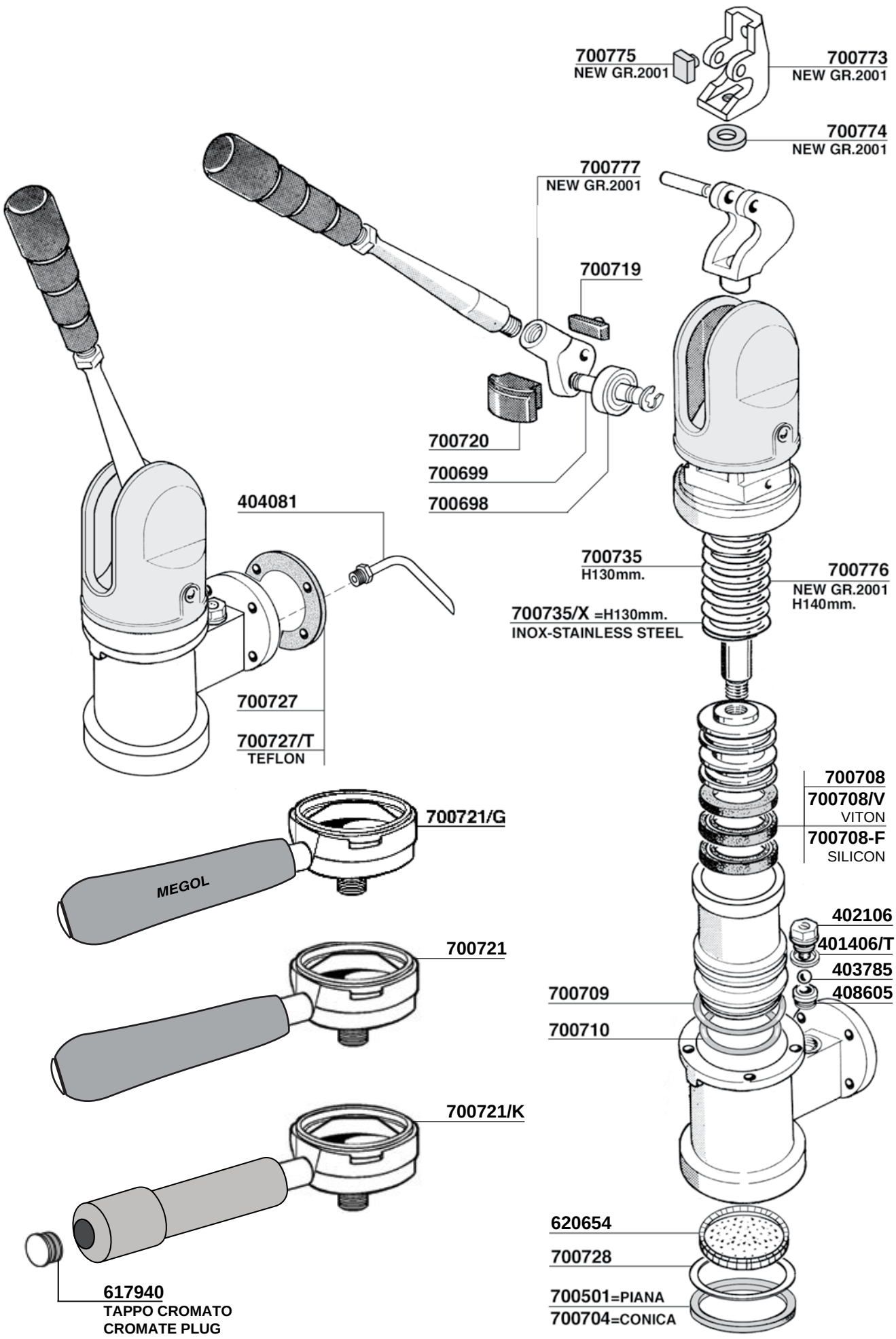
700775
NEW GR.2001
700773
NEW GR.2001
700774
NEW GR.2001
700777
NEW GR.2001
700719
700720
700699
700698
404081
700727
700727/T
TEFLON
700735
H130mm.
700776
NEW GR.2001
H140mm.
700735/X =H130mm.
INOX-STAINLESS STEEL
700708
700708/V
VITON
700708-F
SILICON
402106
401406/T
403785
408605
700709
700710
700721/G
MEGOL
700721
700721/K
620654
700728
700501=PIANA
700704=CONICA
617940
TAPPO CROMATO
CROMATE PLUG

ASTORIA / CMA

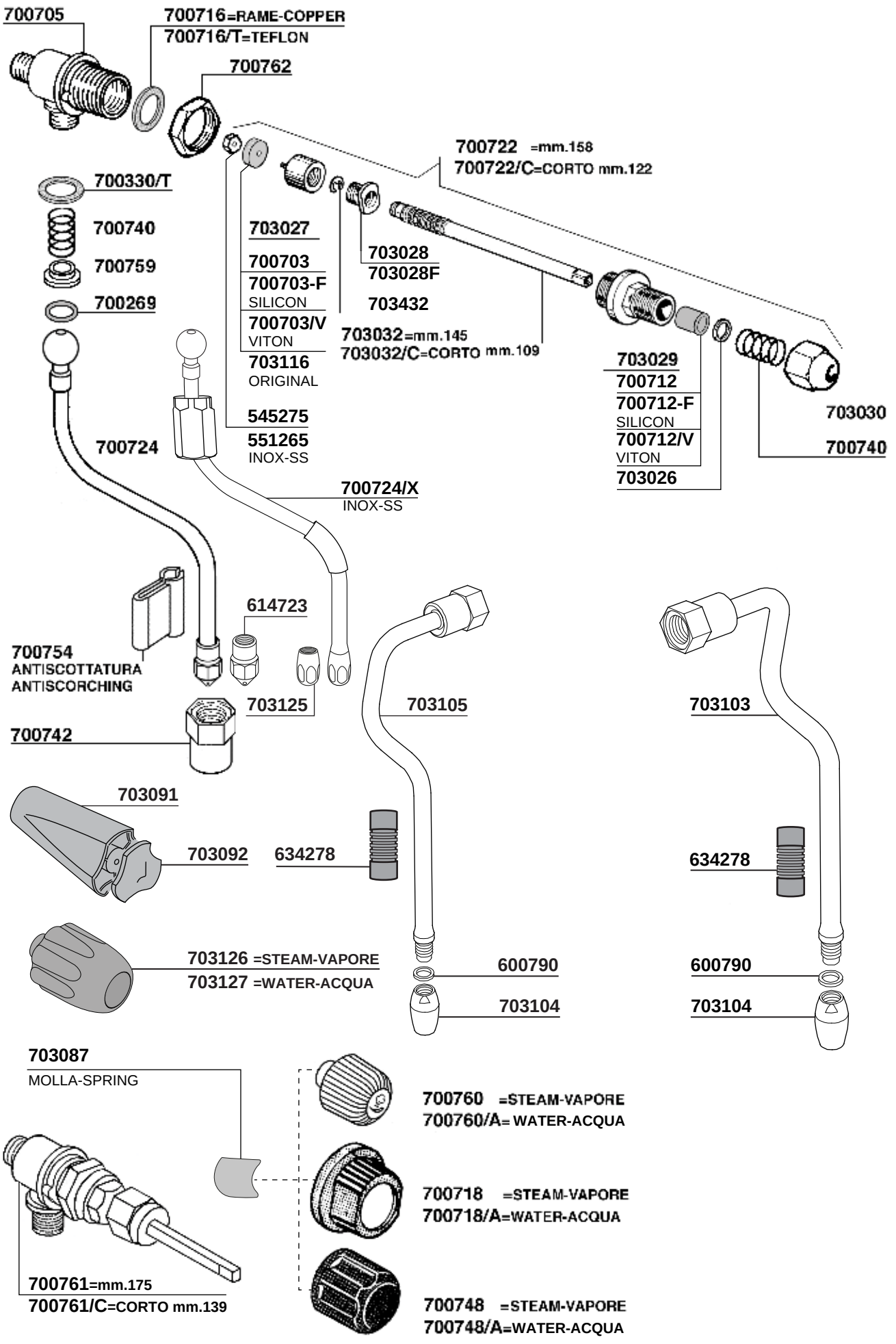
700705
700716=RAME-COPPER
700716/T=TEFLON
700762
700722 =mm.158
700722/C=CORTO mm.122
700330/T
700740
700759
700269
703027
700703
700703-F
SILICON
700703/V
VITON
703116
ORIGINAL
703028
703028F
703432
703032=mm.145
703032/C=CORTO mm.109
703029
700712
700712-F
SILICON
700712/V
VITON
703026
703030
700740
700724
545275
551265
INOX-SS
700724/X
INOX-SS
614723
700754
ANTISCOTTATURA
ANTISCORCHING
703125
700742
703105
703103
703091
703092
634278
634278
703126 =STEAM-VAPORE
703127 =WATER-ACQUA
600790
703104
600790
703104
703087
MOLLA-SPRING
700760 =STEAM-VAPORE
700760/A= WATER-ACQUA
700718 =STEAM-VAPORE
700718/A=WATER-ACQUA
700761=mm.175
700761/C=CORTO mm.139
700748 =STEAM-VAPORE
700748/A=WATER-ACQUA

8

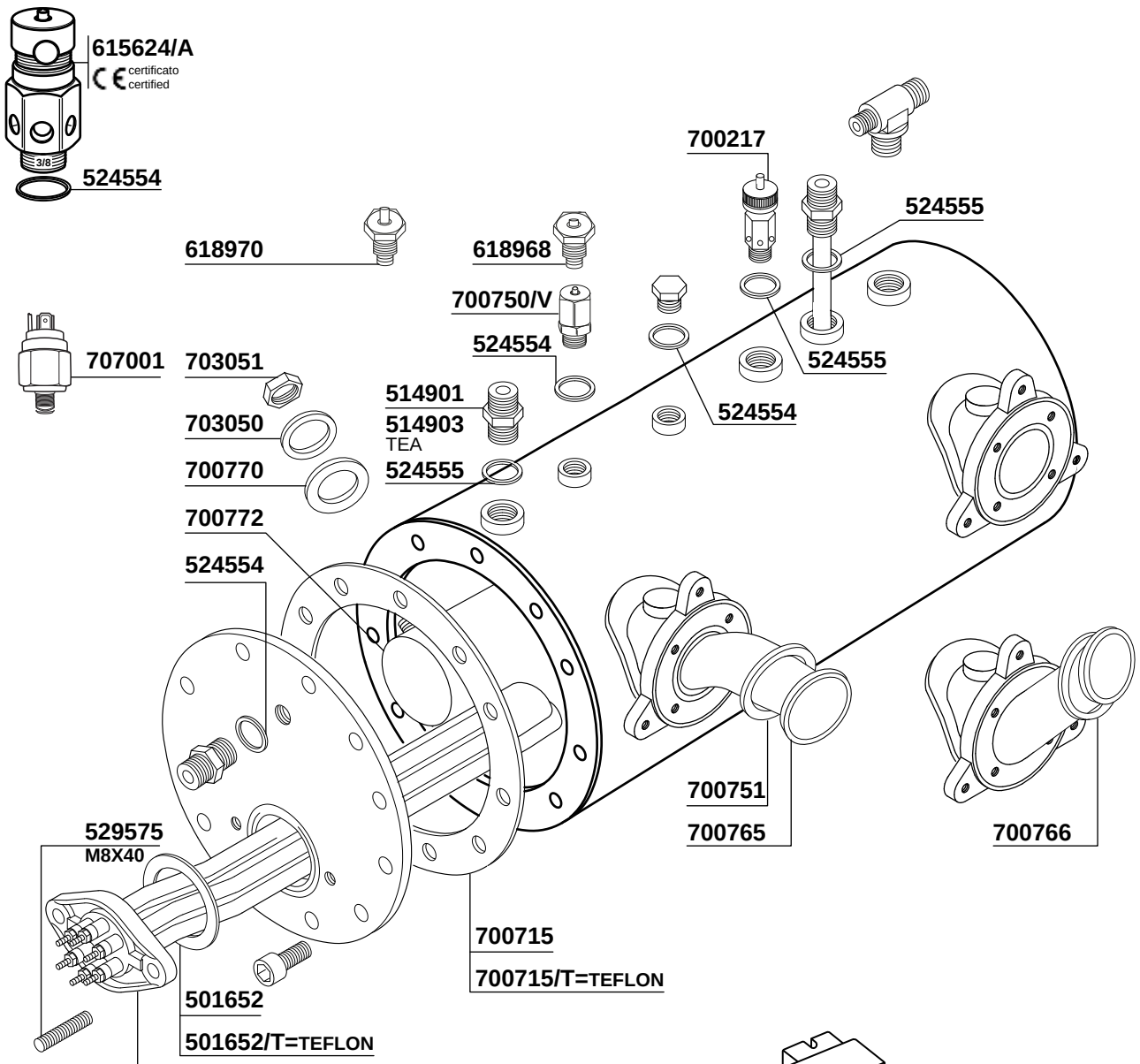

703001=GR1 2000W 220/380V mm. 170	6 POLI
703001/S=GR1 2000W 220/380V mm. 170 PORTASONDA / PROBE HOLDER	
703001/11=GR1 2000W 110V mm. 170	
703002/S=GR2 3000W 220/380V mm. 290 PORTASONDA / PROBE HOLDER	
703003=GR3 3700W 220/380V mm. 570	
703003/S=GR3 3700W 220/380V mm. 570 PORTASONDA / PROBE HOLDER	
703004/S=GR3/4 5000W 230/400V mm. 540 PORTASONDA / PROBE HOLDER	
703069=GR2 4500W 220/380V mm.310	
700731/22=GR1 2000W 220V mm. 160	4 POLI
700731/11=GR1 1700W 110V mm. 175	
700732/22=GR2 2600W 220V mm. 305	
700778=GR3 3700W 220V mm. 515	
700778/S=GR3 3700W 220V mm. 515 PORTASONDA / PROBE HOLDER	
633092=GR3/4 6500W 220V mm. 500	

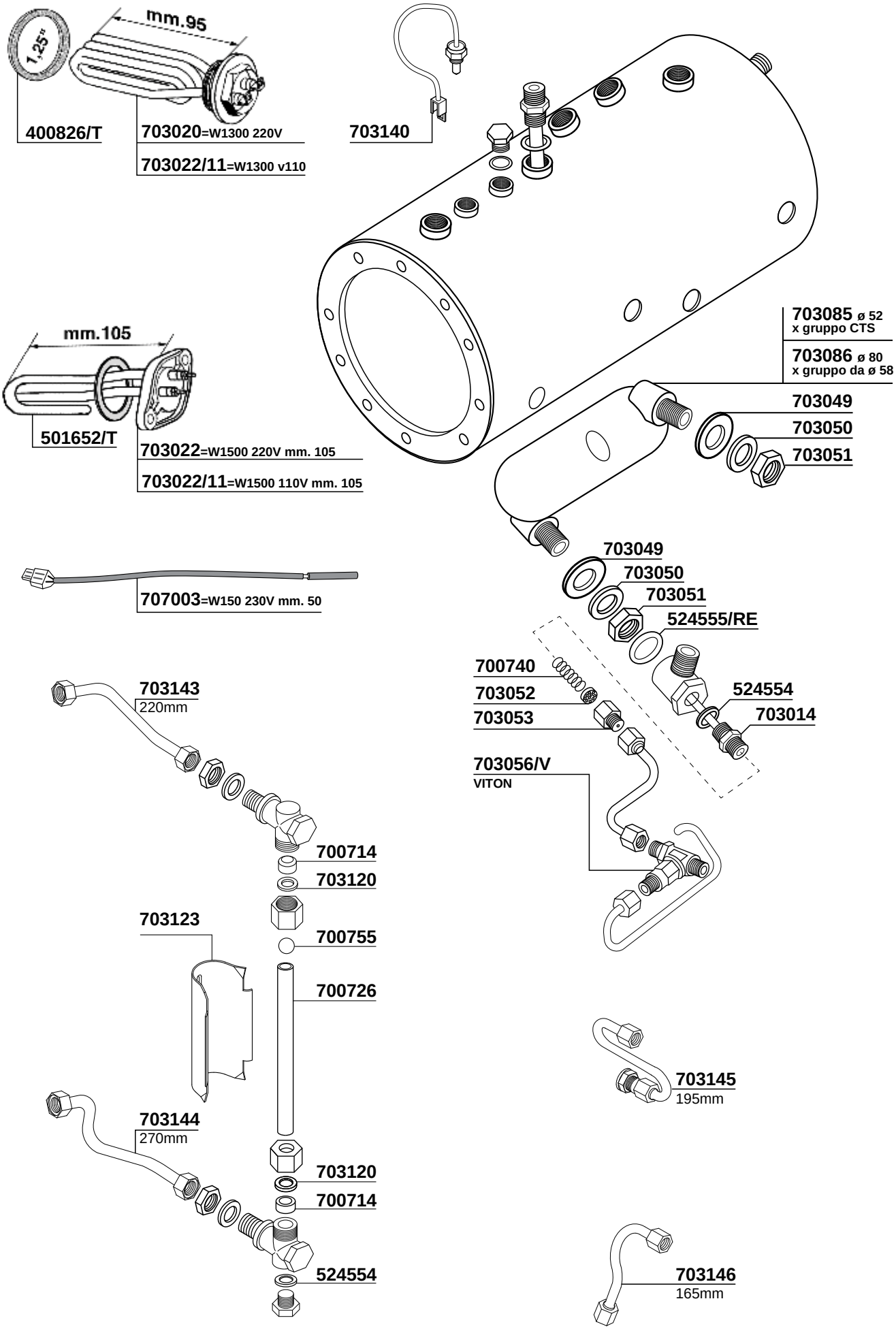
mm.95
1.25"
400826/T
703020=W1300 220V
703022/11=W1300 v110
703140
703085 ø 52 x gruppo CTS
703086 ø 80 x gruppo da ø 58
703049
703050
703051
mm.105
501652/T
703022=W1500 220V mm. 105
703022/11=W1500 110V mm. 105
707003=W150 230V mm. 50
703049
703050
703051
524555/RE
700740
703052
703053
524554
703014
703056/V
VITON
703143
220mm
700714
703120
703123
700755
700726
703145
195mm
703144
270mm
703120
700714
524554
703146
165mm

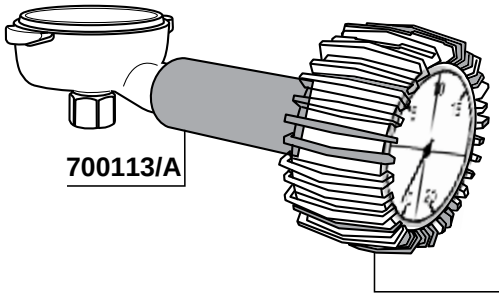

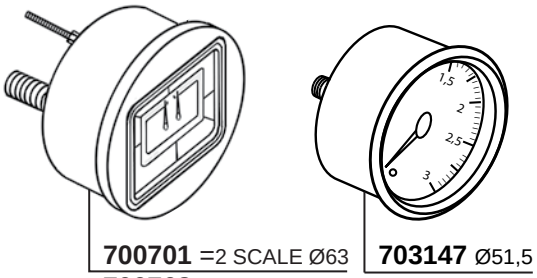

MOTORE RAFFREDDATO AD ACQUA - MOTOR WATERCOOL

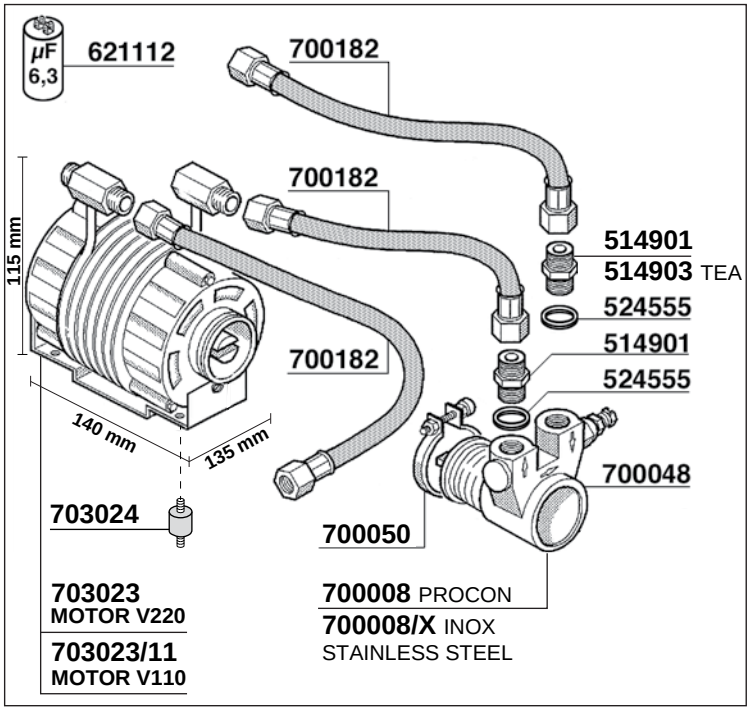

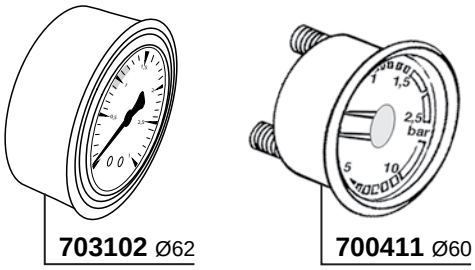

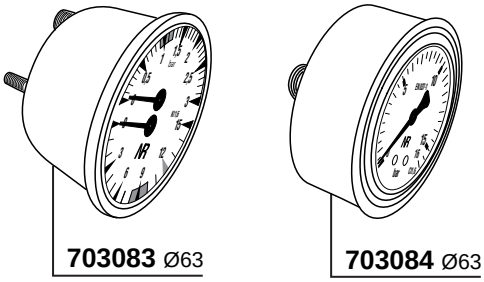

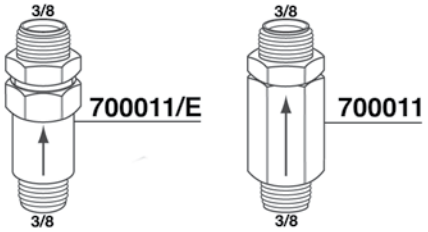

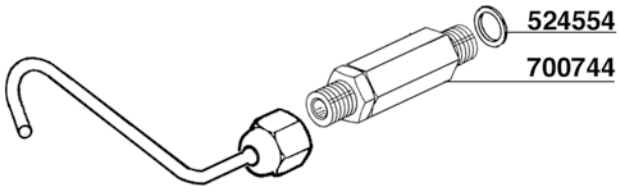

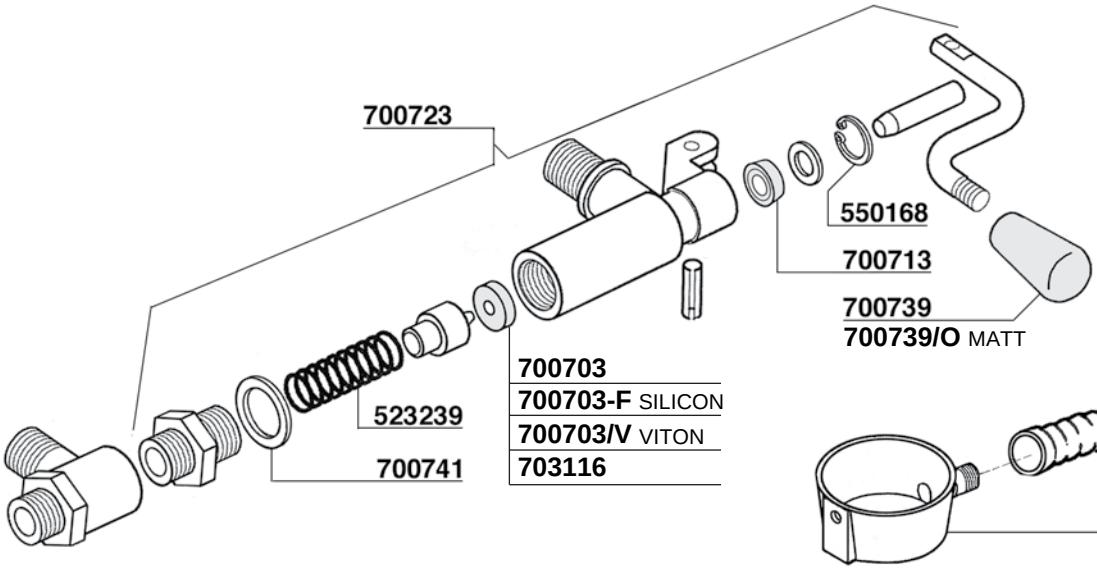

700429

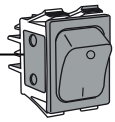



703025
25A 0-1-2

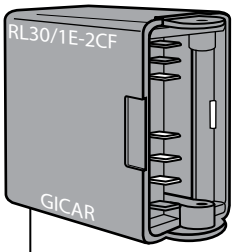

AUTOLIVELLO - AUTOFILL
700737 220V
GICAR CODE 9.1.40.71G
700737/11 110V
GICAR CODE 9.1.40.70G

617902



615978/T

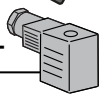

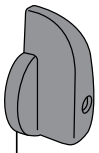

613656

617903/G



530148



551937



620405

703007



700769
32A 0-1

700574=V220
700574/11=V110

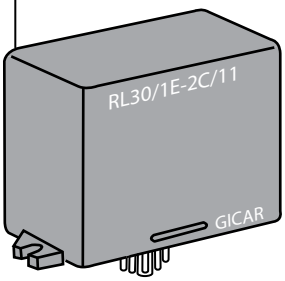



700749
20A 0-1

617902

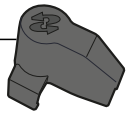

620405/C



703082

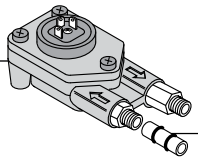

703142

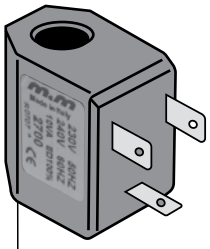

700648/11 =V110/60
700648/22 =V230/50/60
700648/24 =V240/50/60

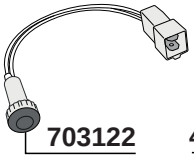

703122

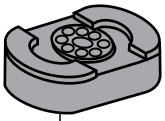

401920

700464

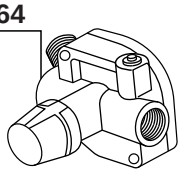

615978/T



615979



530148



617903



551937

700621

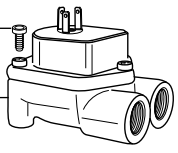

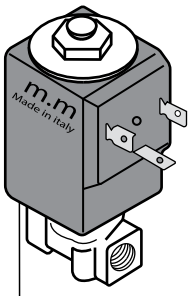

700253/22 =V220
700253/11 =V110

615978/P

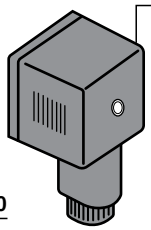

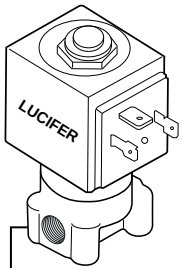

703141
V220/240

616597 CE/UL

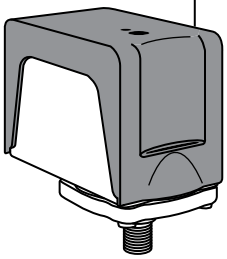

616592 CE
SIRAI

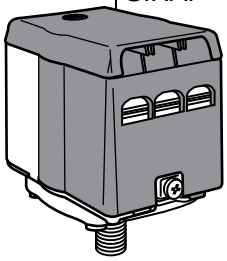

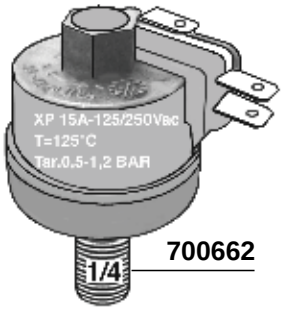

700662

707002

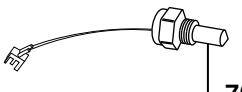

612601
120mm

524554

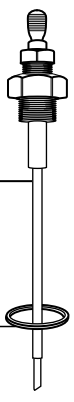

12

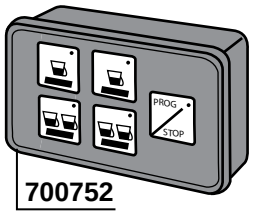

700752
PULSANTIERA
TOUCHPAD

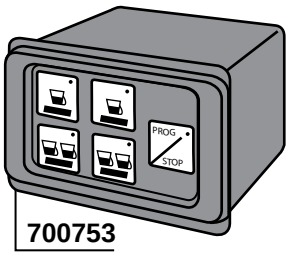

700753
PULSANTIERA - CENTRALINA
TOUCHPAD - ELECTRONIC BOX

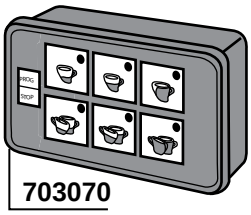

703070
PULSANTIERA - TIMER
TOUCHPAD - TIMER

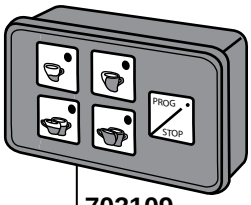

703109
PULSANTIERA
TOUCHPAD

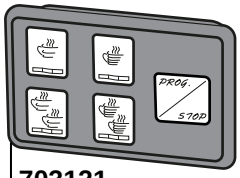

703121
PULSANTIERA
TOUCHPAD

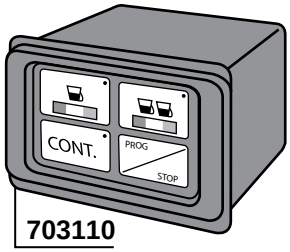

703110
PULSANTIERA - TIMER
TOUCHPAD - TIMER

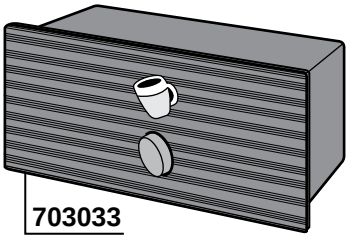

703033
PULSANTIERA MANUALE
MANUAL TOUCHPAD

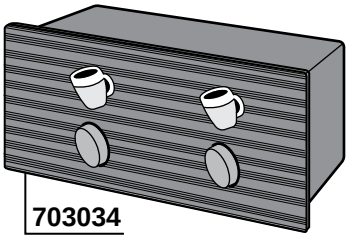

703034
PULSANTIERA MANUALE
MANUAL TOUCHPAD

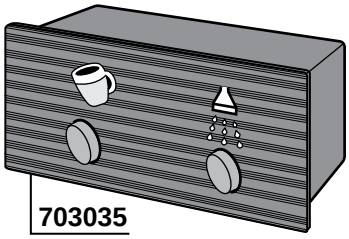

703035
PULSANTIERA MANUALE
MANUAL TOUCHPAD

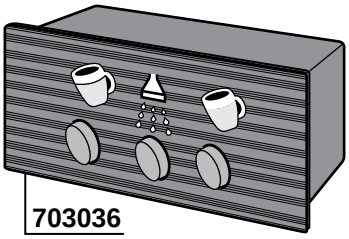

703036
PULSANTIERA MANUALE
MANUAL TOUCHPAD

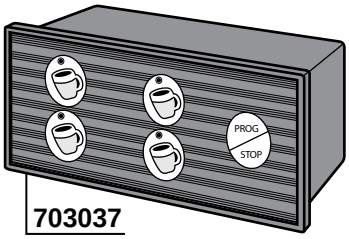

703037
PULSANTIERA
TOUCHPAD

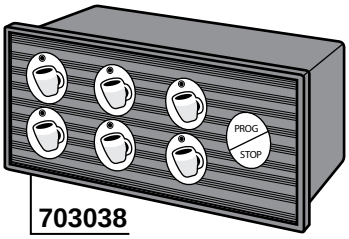

703038
PULSANTIERA
TOUCHPAD

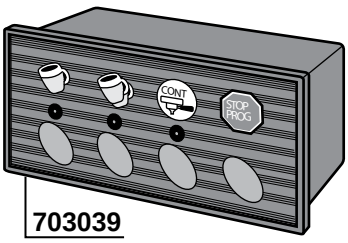

703039
PULSANTIERA - TIMER - LIVELLO
TOUCHPAD - TIMER - LEVEL

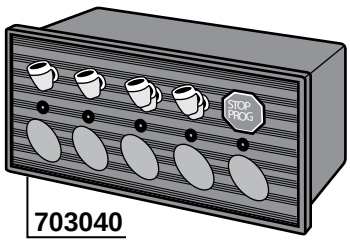

703040
PULSANTIERA - THE' - LIVELLO
TOUCHPAD - TEA - LEVEL

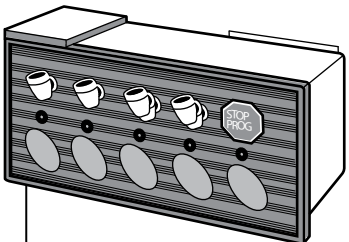

703111
PULSANTIERA
TOUCHPAD

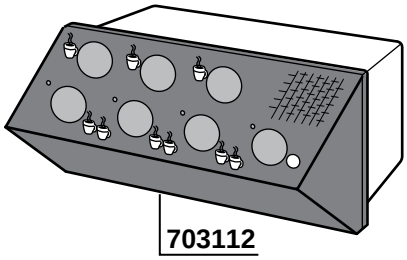

703112
PULSANTIERA
TOUCHPAD

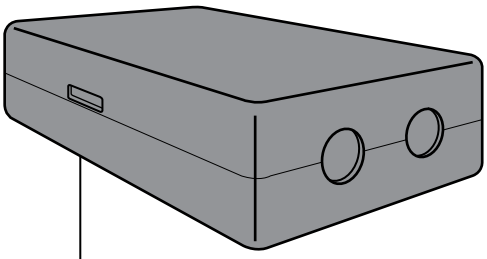

703041 230V
703042 120V
CENTRALINA DIVINA 1/2/3 GRUPPI
DIVINA ELECTRONIC BOX 1/2/3 GROUPS

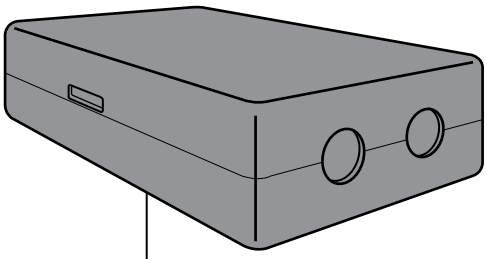

703100 1-3GR 230V PLUS1
703101 1-4GR PLUS2 GICAR CODE 9.5.21.40 G00
703106 1-3GR 230V PLUS3
703006 1/2/3 GR 230V LISA OLD / ARGENTA

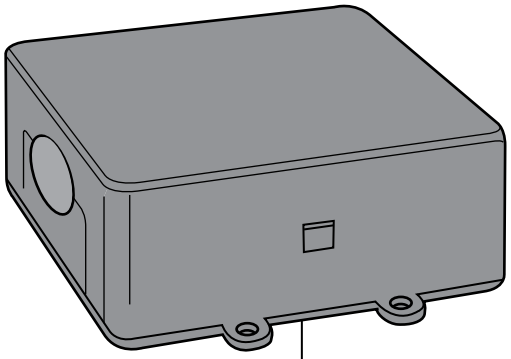

703099 GICAR CODE 9.5.24.21 G

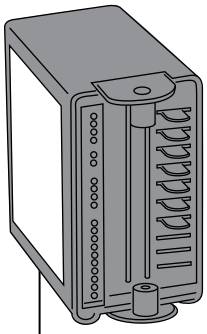

703107 GICAR CODE 9.5.37.08 G01
703108 GICAR CODE 9.5.37.07 G01

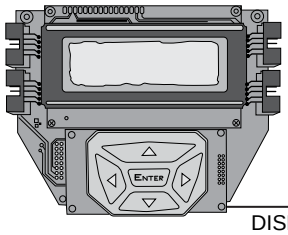

700799
DISPLAY P4Y-09

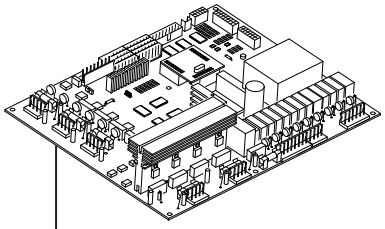

707000 1-4 GR 230V P4U

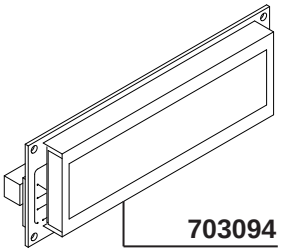

703094

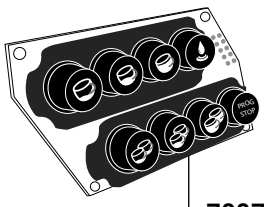

700797
P4U SX/LF

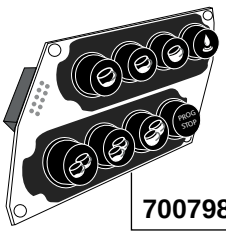

700798
P4U DX/RH

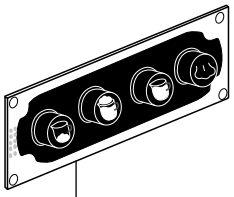

700746
AUTOSTEAMER

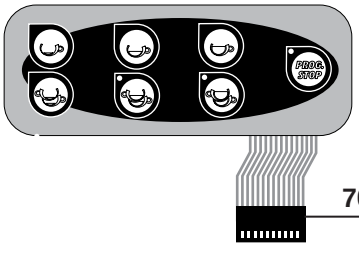

703114

14

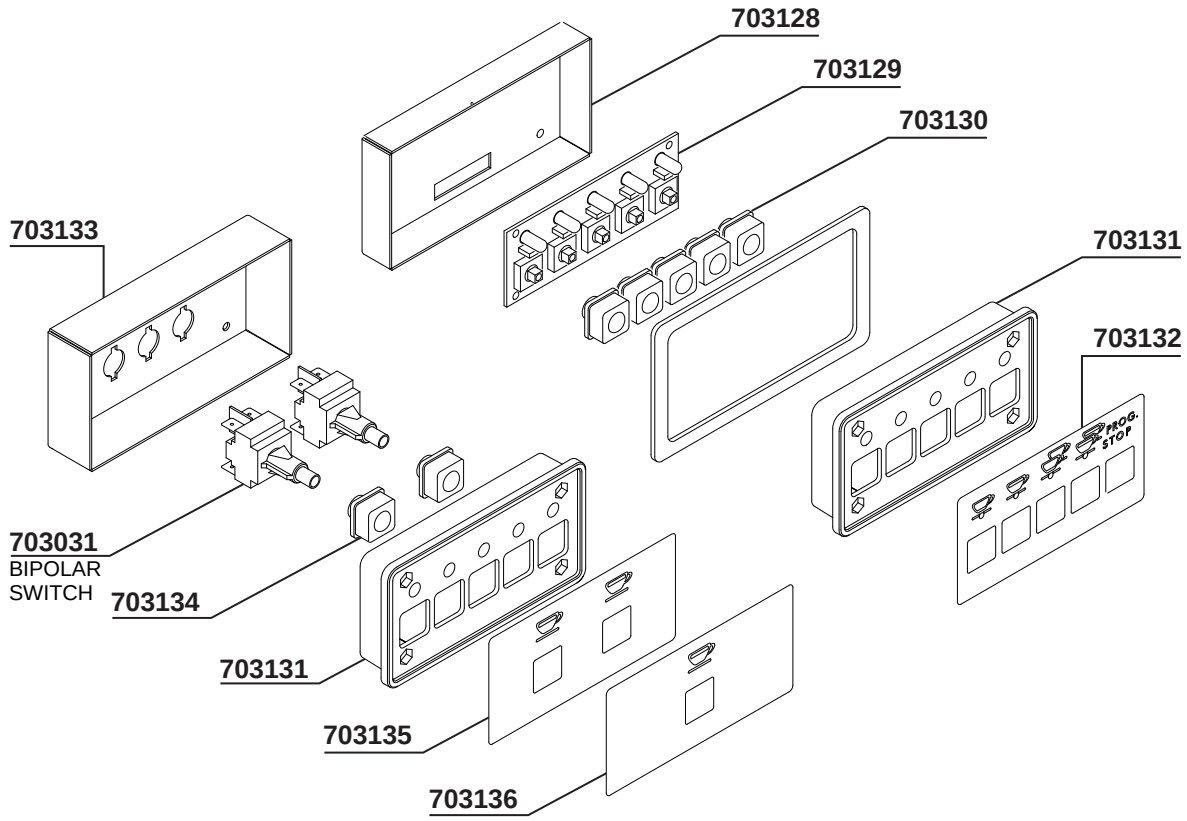

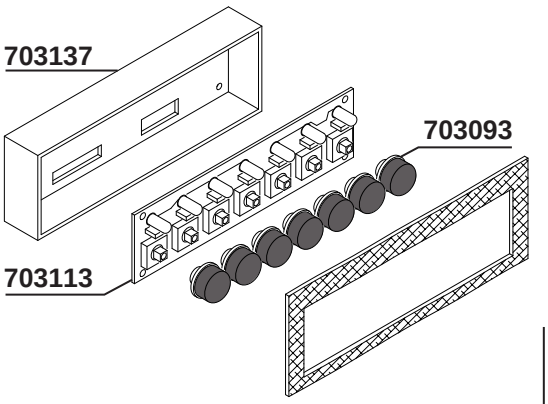

703138

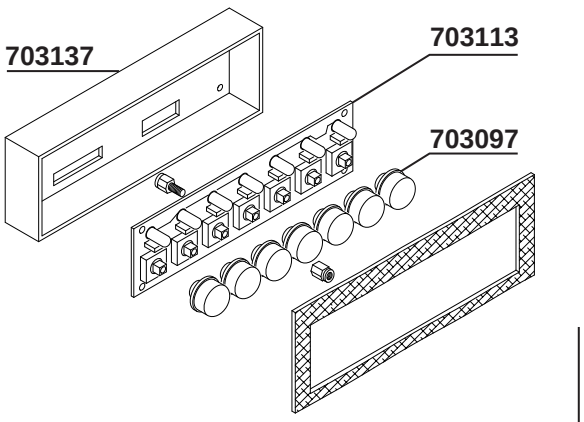

703139

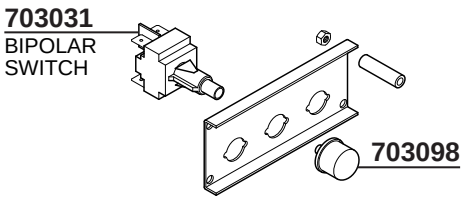

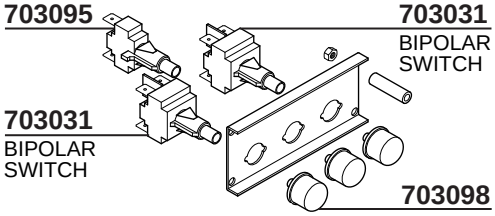



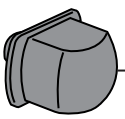

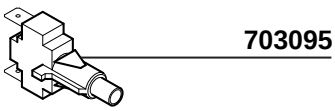

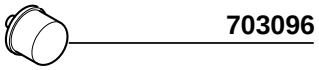

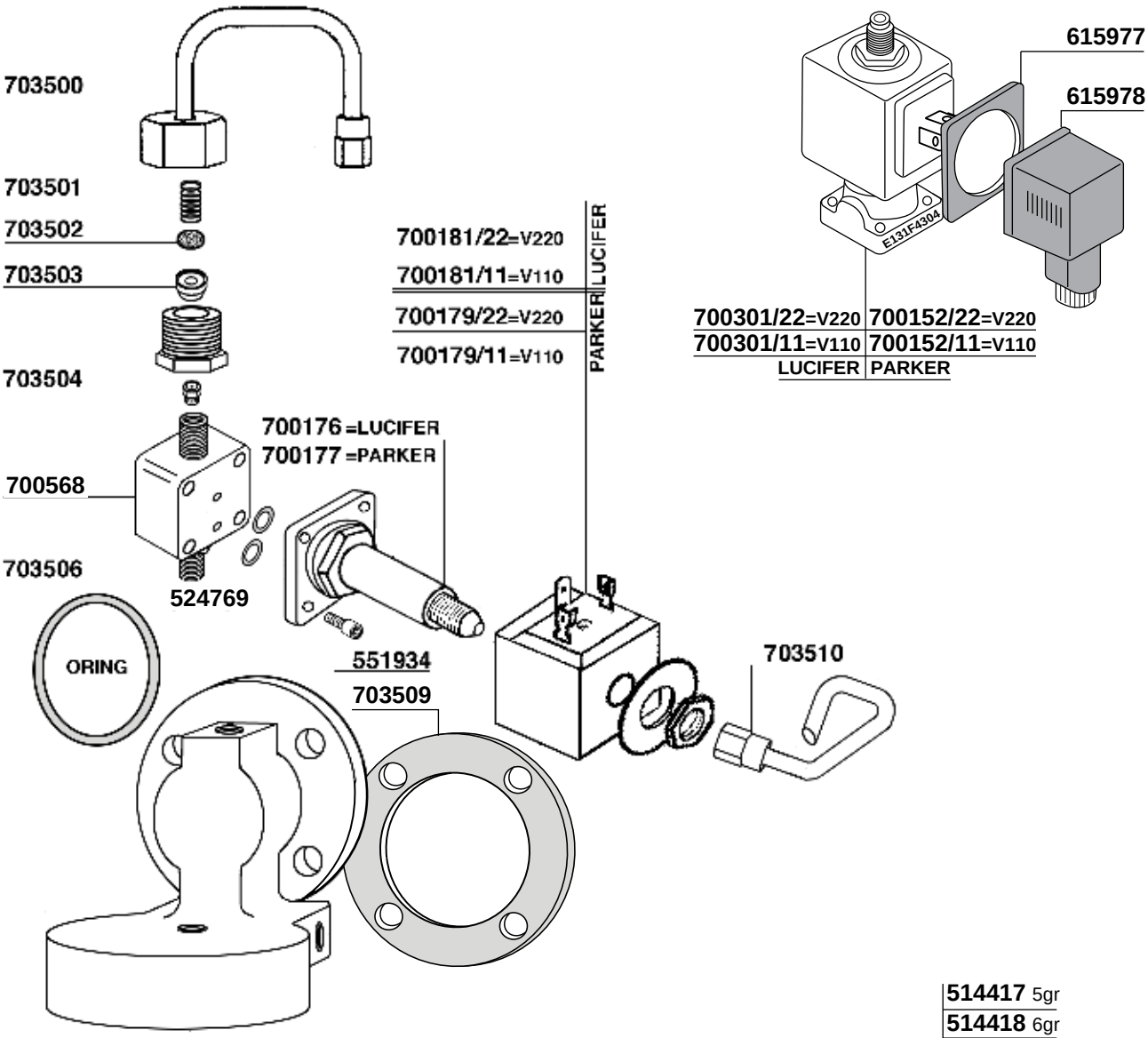
703500
703501
703502
703503
703504
700568
703506
524769
700176 =LUCIFER
700177 =PARKER
700181/22=V220
700181/11=V110
700179/22=V220
700179/11=V110
PARKER
LUCIFER
615977
615978
E131F4304
700301/22=V220
700301/11=V110
LUCIFER
700152/22=V220
700152/11=V110
PARKER
ORING
551934
703509
703510

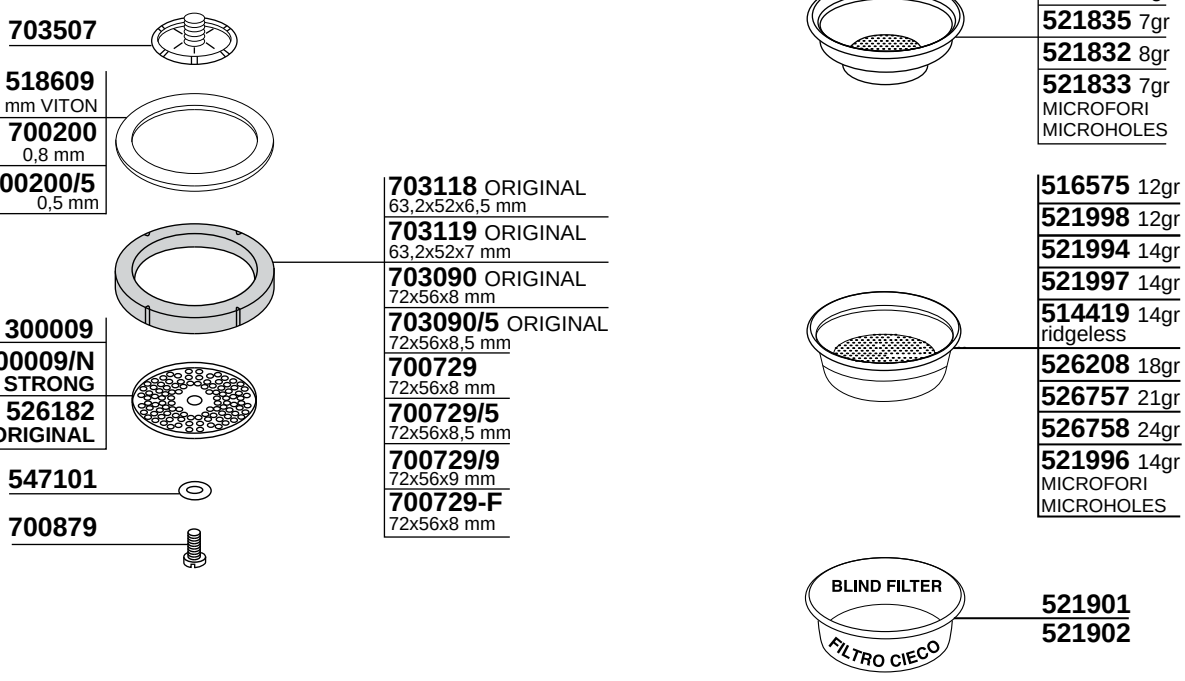
703507
518609
1 mm VITON
700200
0,8 mm
700200/5
0,5 mm
703118 ORIGINAL
63,2x52x6,5 mm
703119 ORIGINAL
63,2x52x7 mm
703090 ORIGINAL
72x56x8 mm
703090/5 ORIGINAL
72x56x8,5 mm
700729
72x56x8 mm
700729/5
72x56x8,5 mm
700729/9
72x56x9 mm
700729-F
72x56x8 mm
300009
300009/N
STRONG
526182
ORIGINAL
547101
700879
514417 5gr
514418 6gr
521834 6gr
521830 7gr
521835 7gr
521832 8gr
521833 7gr
MICROFORI
MICROHOLES
516575 12gr
521998 12gr
521994 14gr
521997 14gr
514419 14gr
ridgeless
526208 18gr
526757 21gr
526758 24gr
521996 14gr
MICROFORI
MICROHOLES
BLIND FILTER
FILTRO CIECO
521901
521902

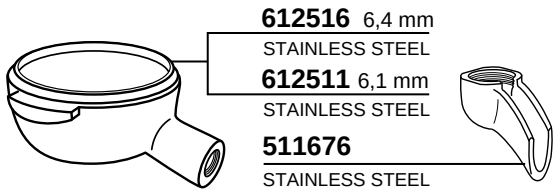
612516 6,4 mm
STAINLESS STEEL
612511 6,1 mm
STAINLESS STEEL
511676
STAINLESS STEEL

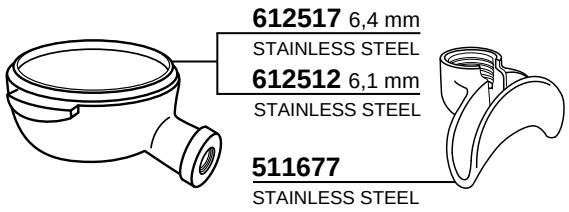
612517 6,4 mm
STAINLESS STEEL
612512 6,1 mm
STAINLESS STEEL
511677
STAINLESS STEEL

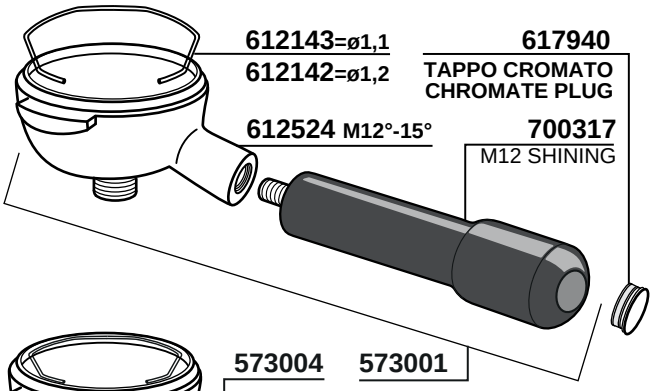
612143=ø1,1
612142=ø1,2
617940
TAPPO CROMATO
CHROMATE PLUG
612524 M12°-15°
700317
M12 SHINING

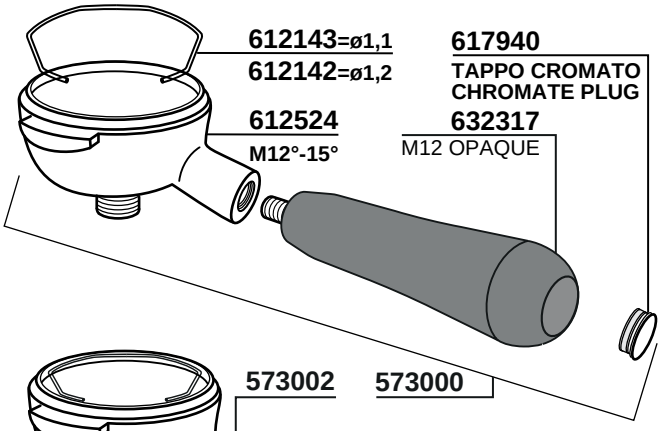
612143=ø1,1
612142=ø1,2
617940
TAPPO CROMATO
CHROMATE PLUG
612524
M12°-15°
632317
M12 OPAQUE

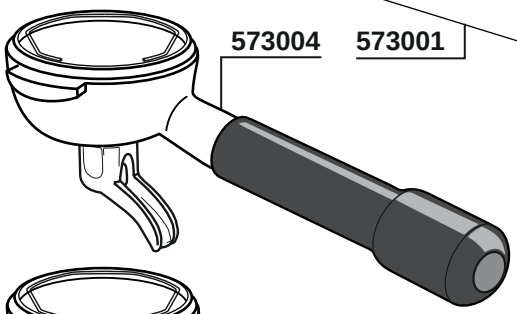
573004
573001

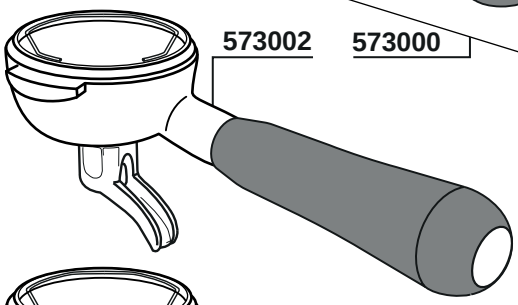
573002
573000

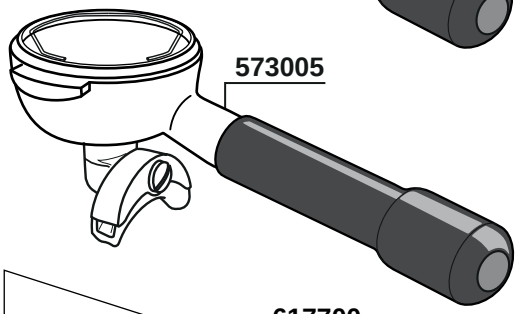
573005

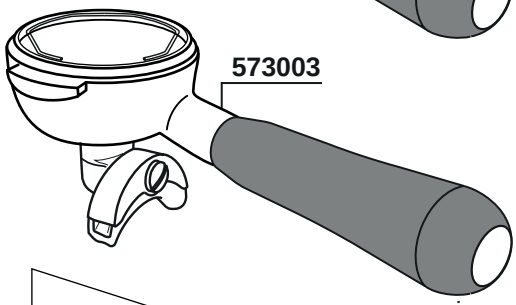
573003

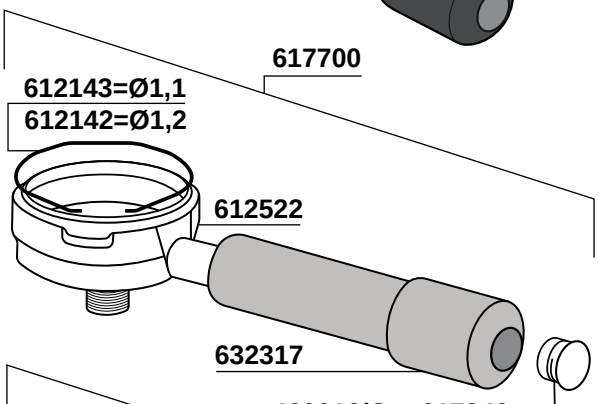
617700
612143=Ø1,1
612142=Ø1,2
612522
632317

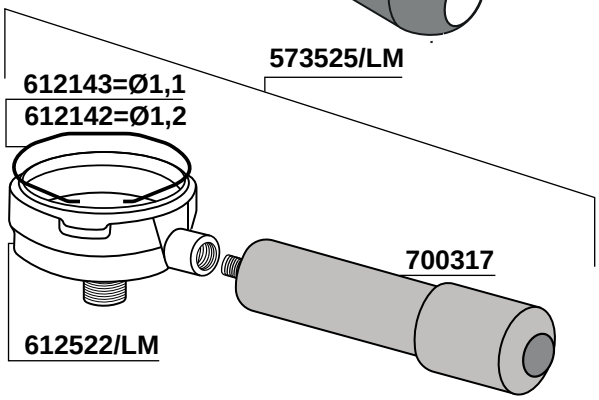
573525/LM
612143=Ø1,1
612142=Ø1,2
700317
612522/LM

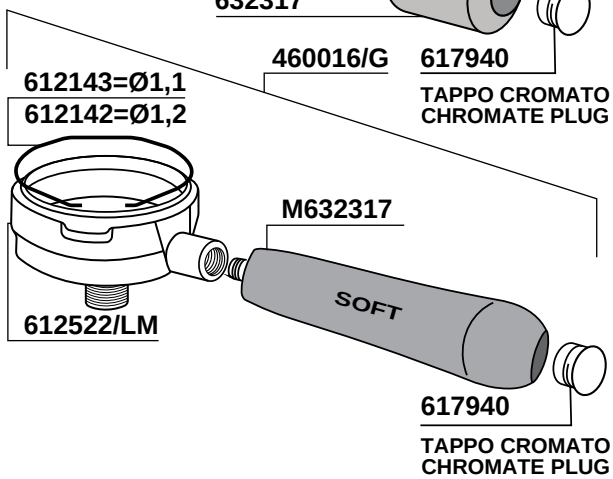
460016/G
617940
TAPPO CROMATO
CHROMATE PLUG
612143=Ø1,1
612142=Ø1,2
M632317
SOFT
612522/LM
617940
TAPPO CROMATO
CHROMATE PLUG

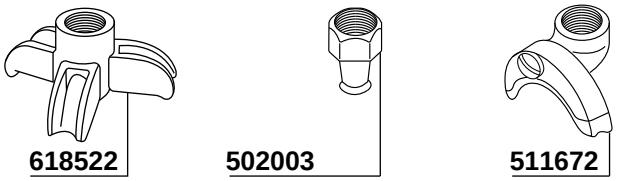
618522
502003
511672

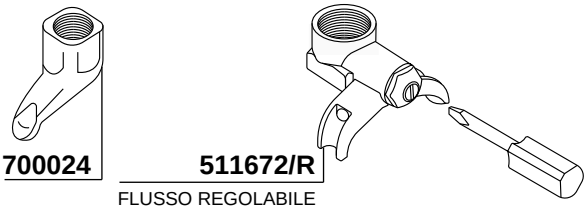
700024
511672/R
FLUSSO REGOLABILE
ADJUSTABLE FLOW

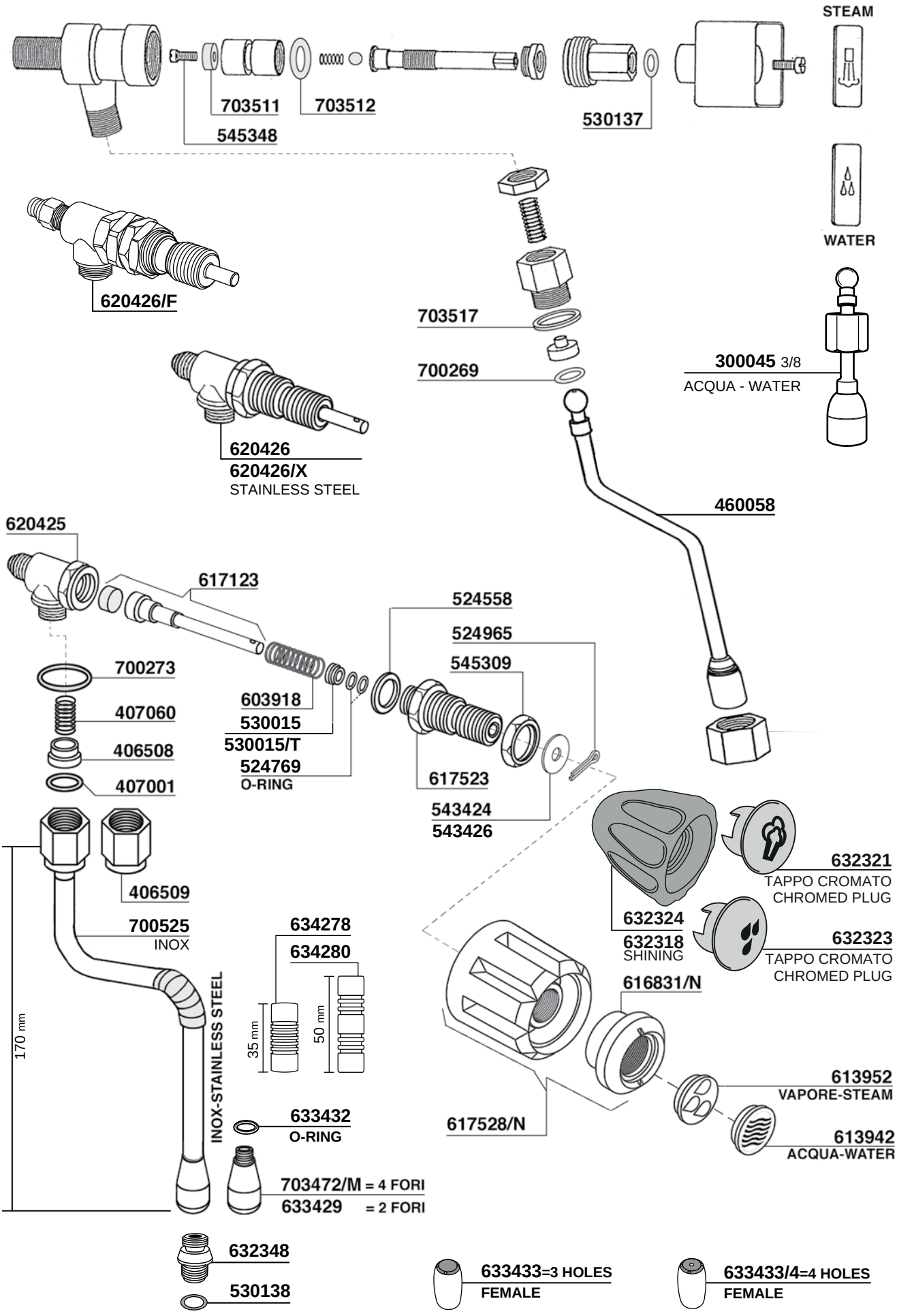
STEAM
WATER
703511
703512
545348
530137
620426/F
703517
700269
300045 3/8
ACQUA - WATER
620426
620426/X
STAINLESS STEEL
460058
620425
617123
524558
524965
545309
700273
603918
530015
530015/T
524769
O-RING
407060
406508
407001
617523
543424
543426
406509
700525
INOX
INOX-STAINLESS STEEL
170 mm
634278
634280
35 mm
50 mm
633432
O-RING
703472/M = 4 FORI
633429 = 2 FORI
632348
530138
632321
TAPPO CROMATO
CHROMED PLUG
632324
632318
SHINING
632323
TAPPO CROMATO
CHROMED PLUG
616831/N
613952
VAPORE-STEAM
613942
ACQUA-WATER
617528/N
633433=3 HOLES
FEMALE
633433/4=4 HOLES
FEMALE

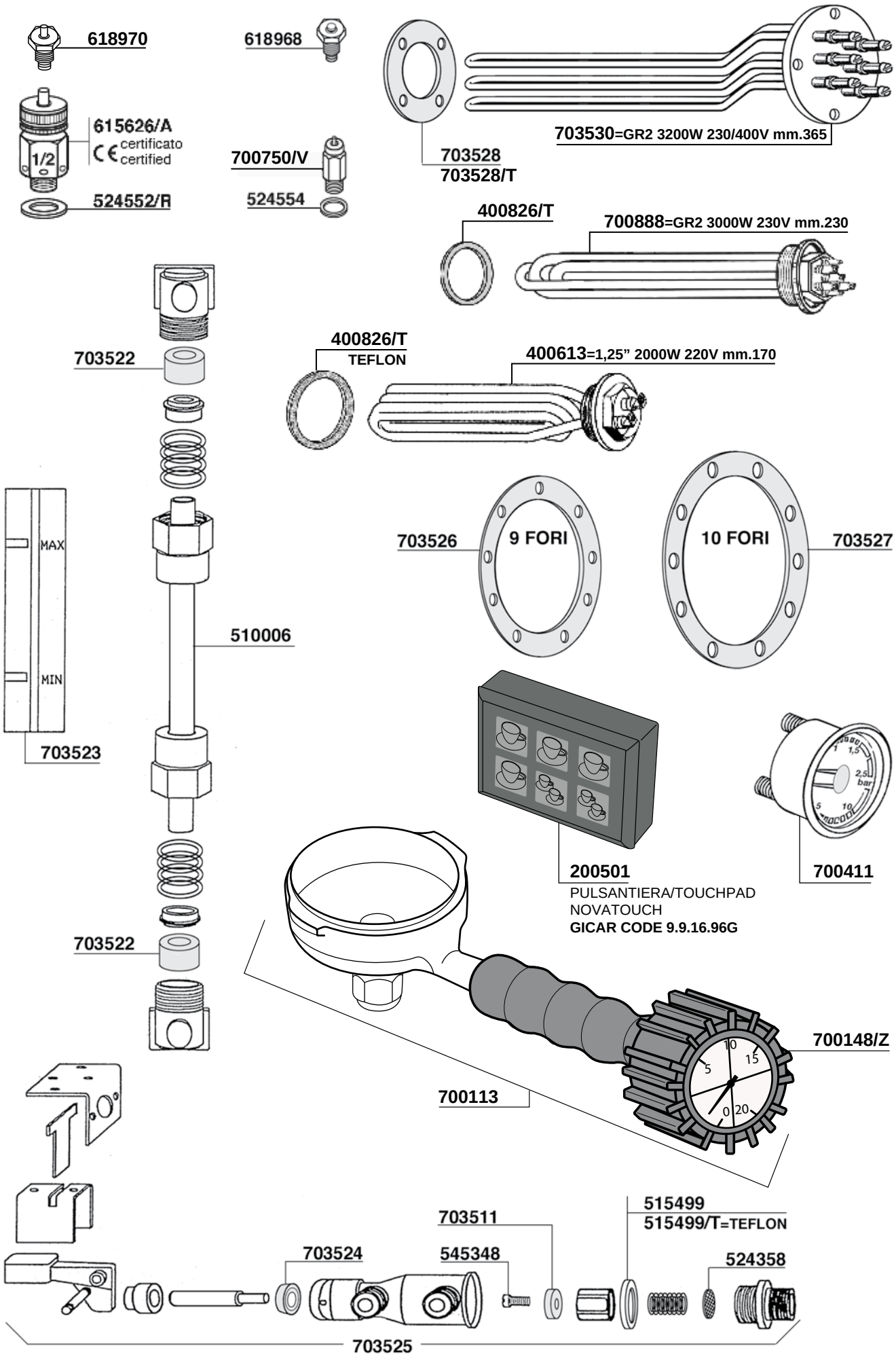
618970
618968
615626/A
certificato
certified
1/2
524552/R
700750/V
524554
703528
703528/T
703530=GR2 3200W 230/400V mm.365
400826/T
700888=GR2 3000W 230V mm.230
703522
400826/T
TEFLON
400613=1,25" 2000W 220V mm.170
MAX
MIN
703523
510006
703526
9 FORI
10 FORI
703527
200501
PULSANTIERA/TOUCHPAD
NOVATOUCH
GICAR CODE 9.9.16.96G
700411
703522
700148/Z
700113
515499
515499/T=TEFLON
703511
703524
545348
524358
703525

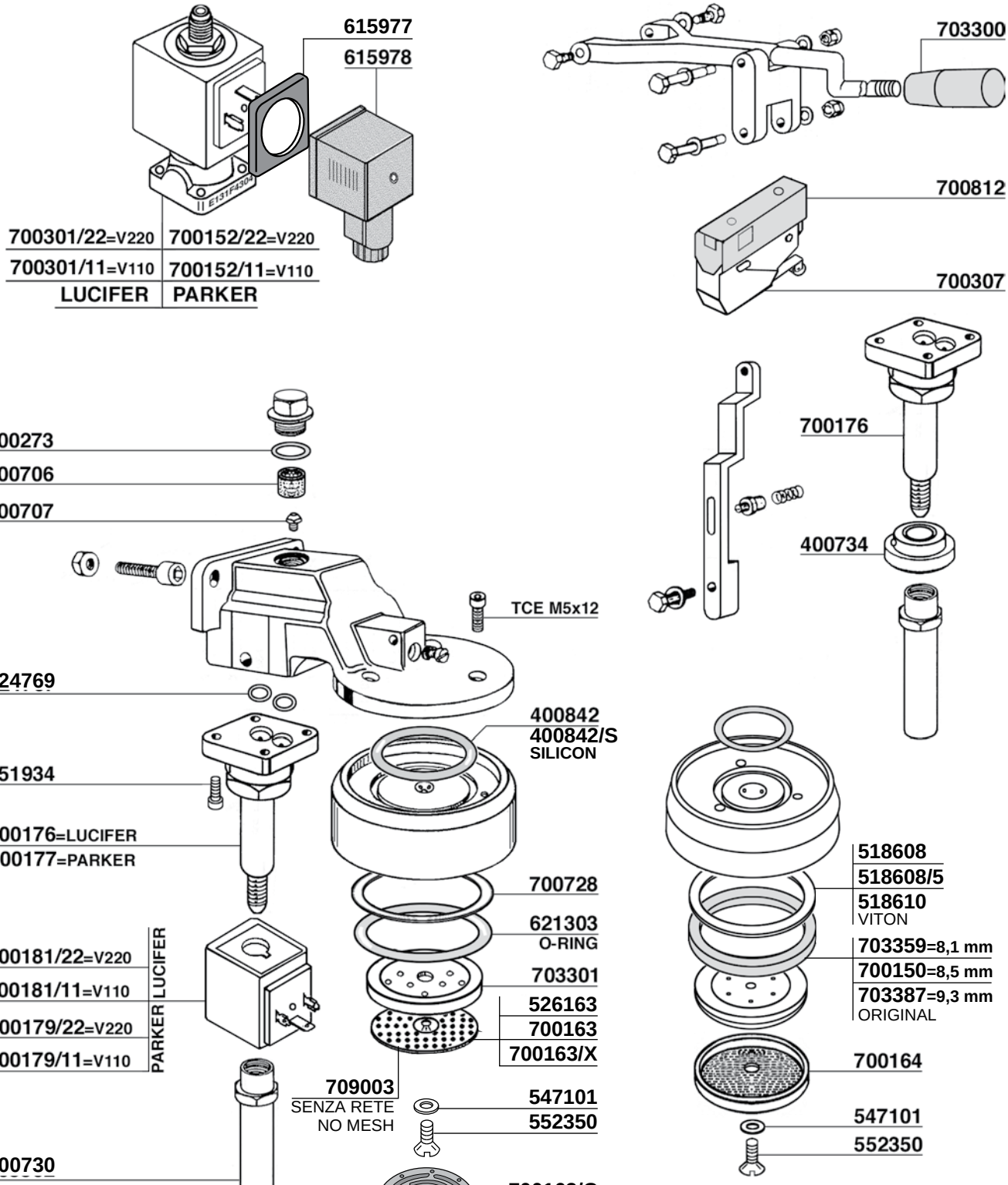
615977
615978
700301/22=V220
700301/11=V110
LUCIFER
700152/22=V220
700152/11=V110
PARKER
703300
700812
700307
700273
700706
700707
TCE M5x12
524769
551934
700176=LUCIFER
700177=PARKER
700181/22=V220
700181/11=V110
700179/22=V220
700179/11=V110
LUCIFER
PARKER
700730
709003
SENZA RETE
NO MESH
400842
400842/S
SILICON
700728
621303
O-RING
703301
526163
700163
700163/X
547101
552350
700163/C
700176
400734
518608
518608/5
518610
VITON
703359=8,1 mm
700150=8,5 mm
703387=9,3 mm
ORIGINAL
700164
547101
552350

20

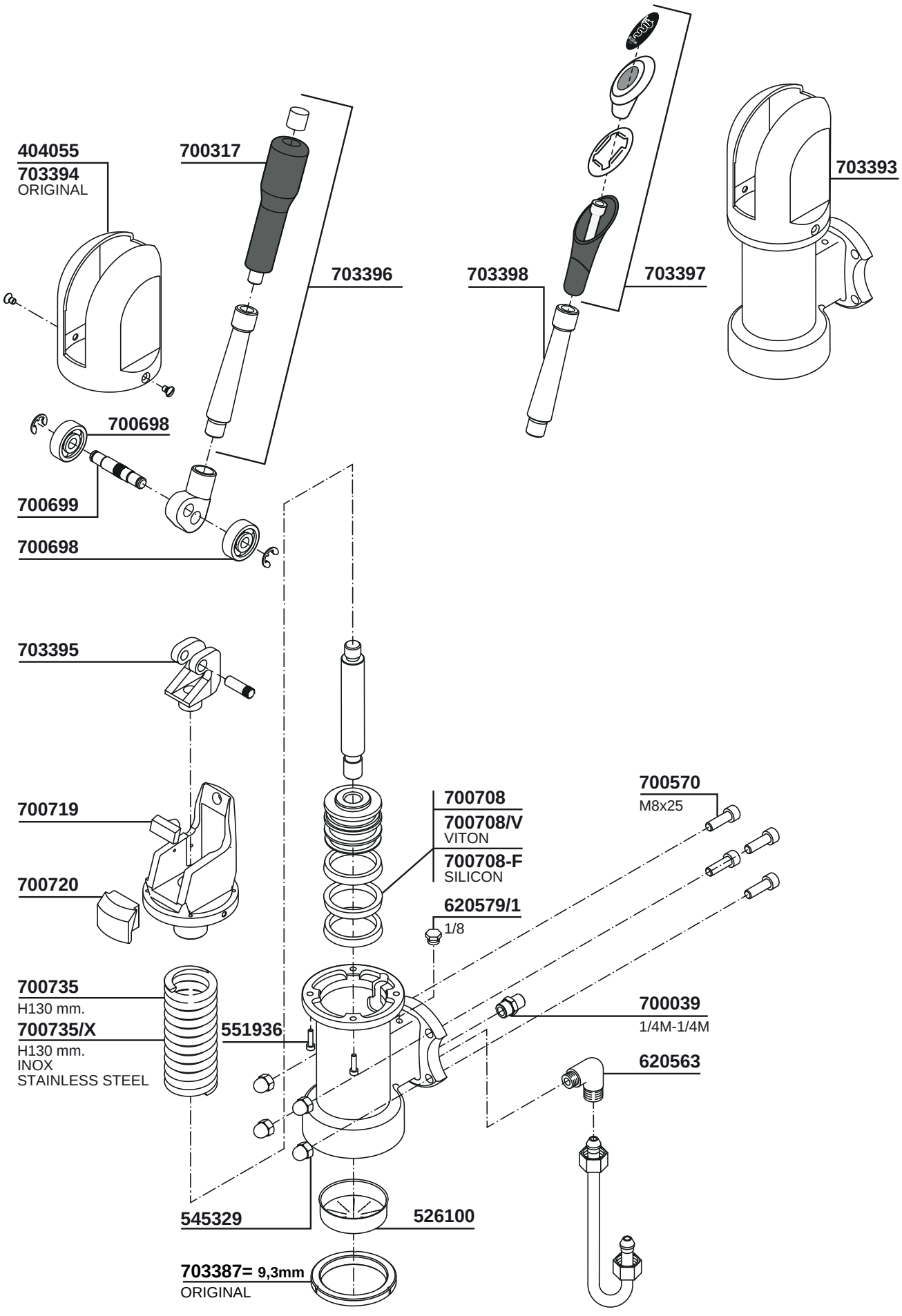
404055
703394
ORIGINAL
700317
703396
703398
703397
703393
700698
700699
700698
703395
700719
700720
700708
700708/V
VITON
700708-F
SILICON
620579/1
1/8
700570
M8x25
700735
H130 mm.
700735/X
H130 mm.
INOX
STAINLESS STEEL
551936
700039
1/4M-1/4M
620563
545329
526100
703387= 9,3mm
ORIGINAL

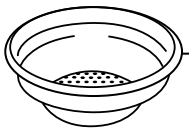

514417 5gr
514418 6gr
521834 6gr
521830 7gr
521835 7gr
521832 8gr
521833 7gr
MICROFORI
MICROHOLES

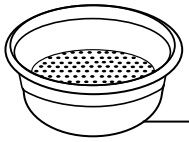

516575 12gr
521998 12gr
521994 14gr
521997 14gr
514419 14gr ridgeless
516575 12gr
526208 18gr
526757 21gr
526758 24gr
521996 14gr
MICROFORI
MICROHOLES

521902



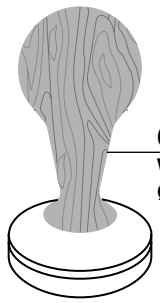

620891
WOODEN HANDLE
Ø57,5

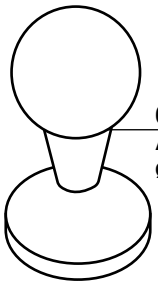

620438
ALUMINIUM
Ø57

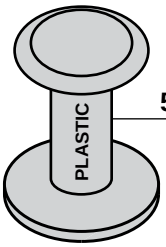

513744

703397
ORIGINAL

612143=ø1,1
612142=ø1,2

700702

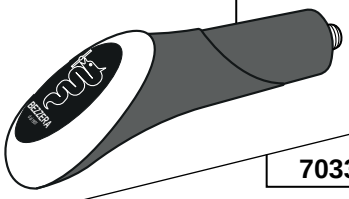

703399

612143=ø1,1
612142=ø1,2

700702

700317
M12 SHINING

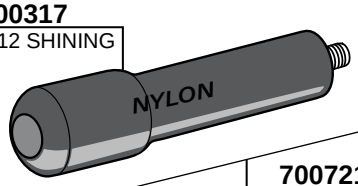

700721/K

612143=ø1,1
612142=ø1,2

700702

700148/Z

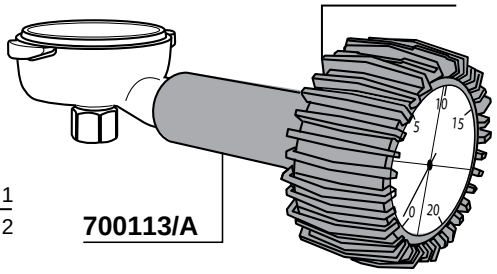

700113/A

617940
TAPPO CROMATO
CHROMATE PLUG

M632317
M12

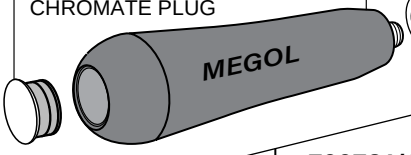

612143=ø1,1
612142=ø1,2

700702

700721/G

612143=ø1,1
612142=ø1,2

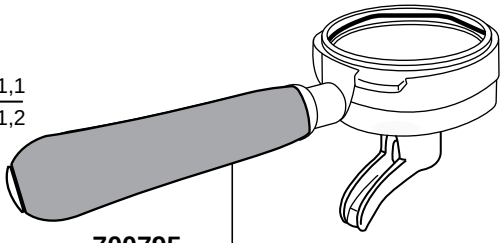

700795

617940
TAPPO CROMATO
CHROMATE PLUG

632317
M12

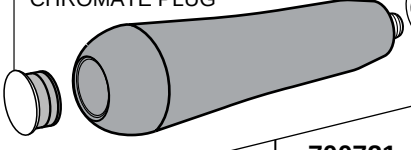

700702

700721

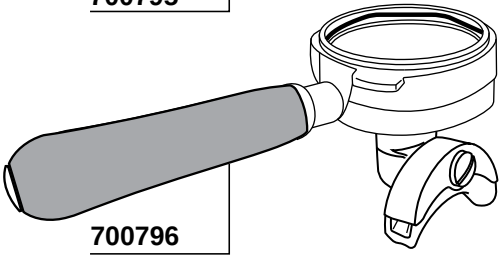

700796



511672



511672/R



700024

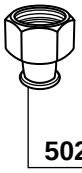

502003

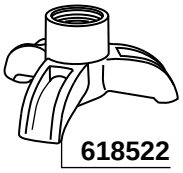

618522

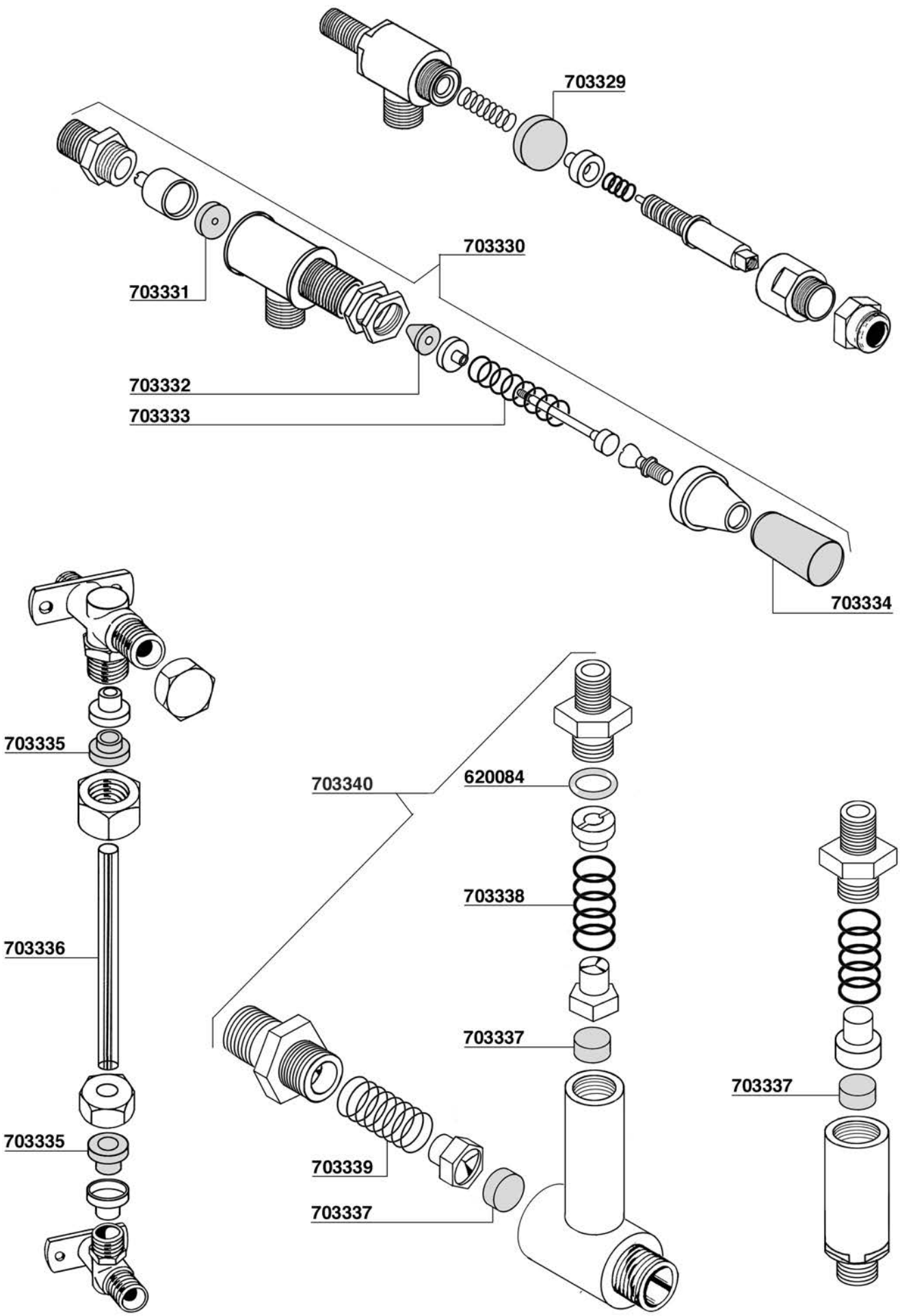
703329
703330
703331
703332
703333
703334
703335
703336
703335
703340
620084
703338
703337
703339
703337
703337

ELLISSE

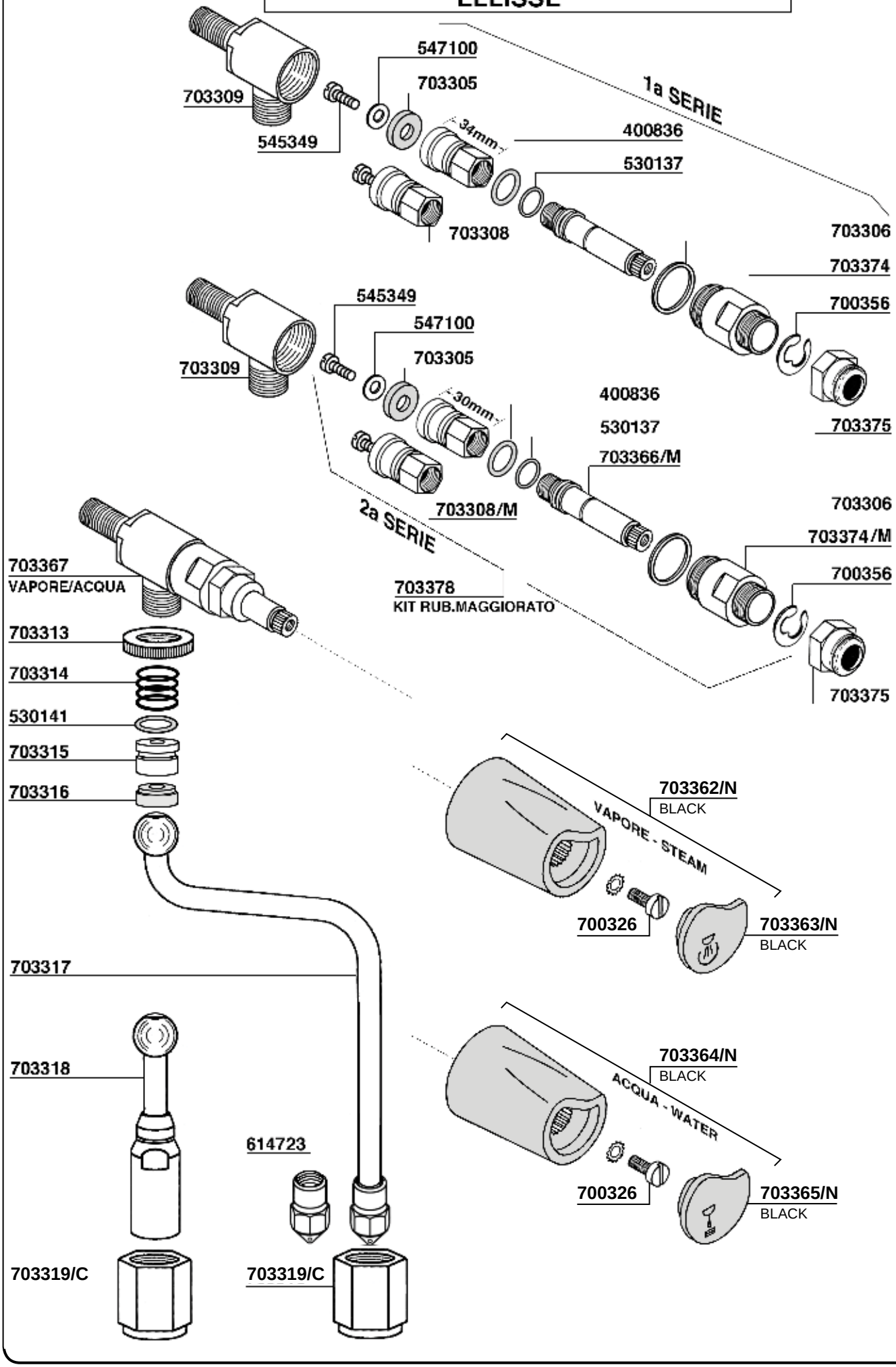
703309
545349
547100
703305
34mm
400836
530137
703308
1a SERIE
703306
703374
700356
703375
703309
545349
547100
703305
30mm
400836
530137
703366/M
703308/M
2a SERIE
703306
703374/M
700356
703375
703378
KIT RUB.MAGGIORATO
703367
VAPORE/ACQUA
703313
703314
530141
703315
703316
703317
703318
614723
703319/C
703319/C
703362/N
BLACK
VAPORE - STEAM
700326
703363/N
BLACK
703364/N
BLACK
ACQUA - WATER
700326
703365/N
BLACK

24

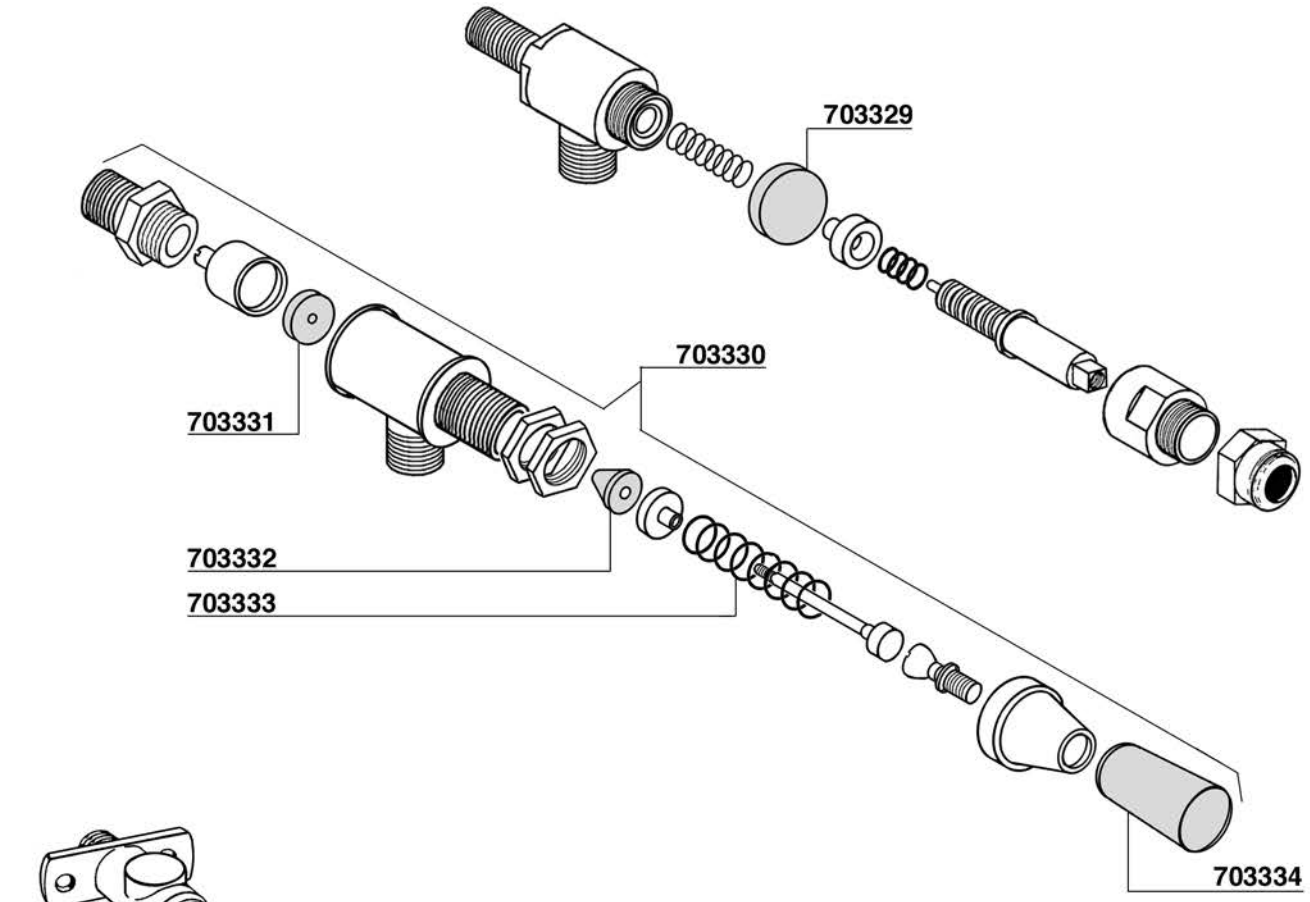
703329
703330
703331
703332
703333
703334

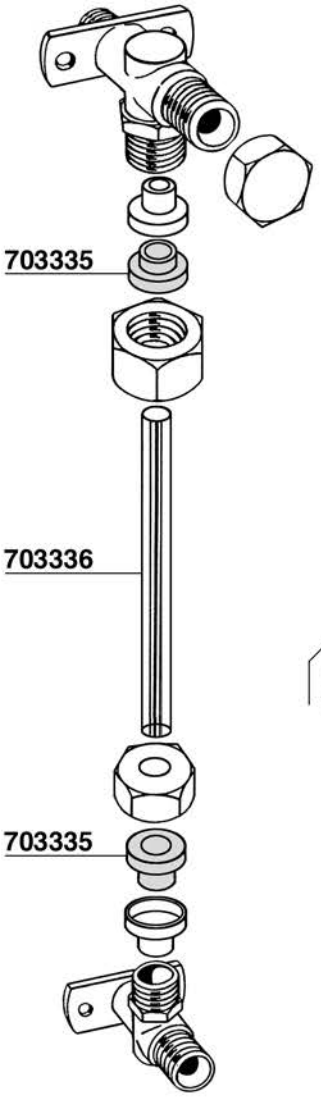
703335
703336
703335

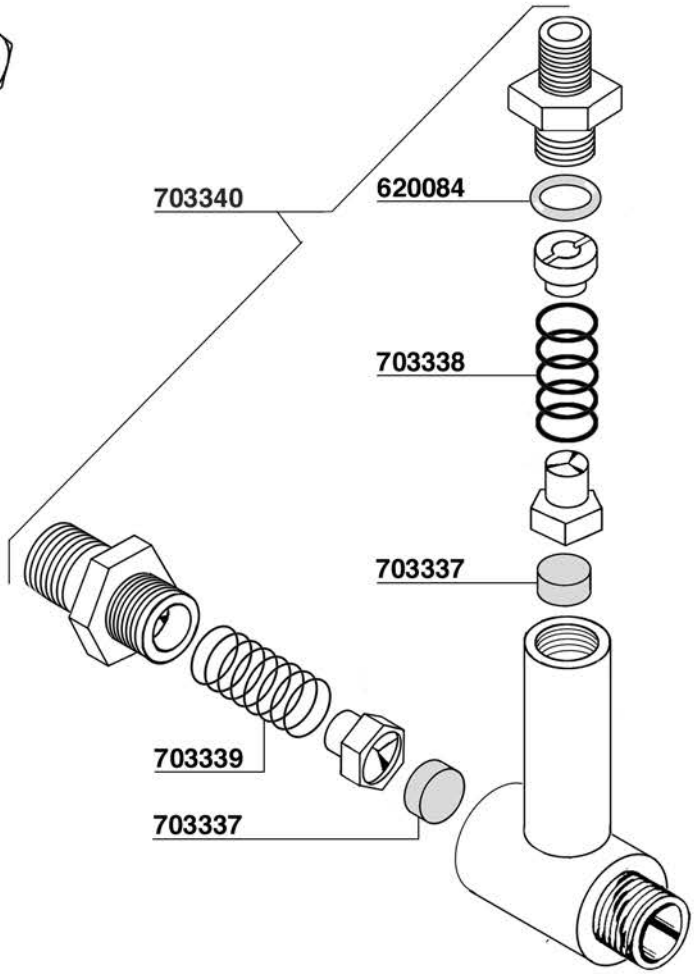
703340
620084
703338
703337
703339
703337

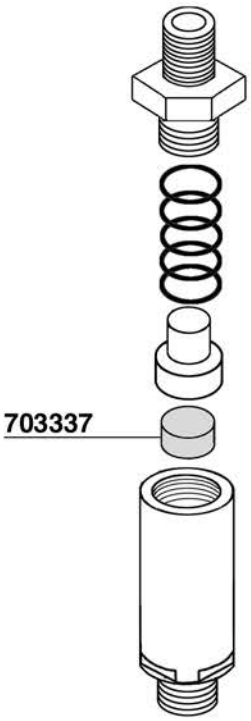
703337

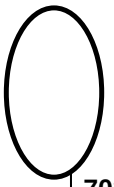

703384

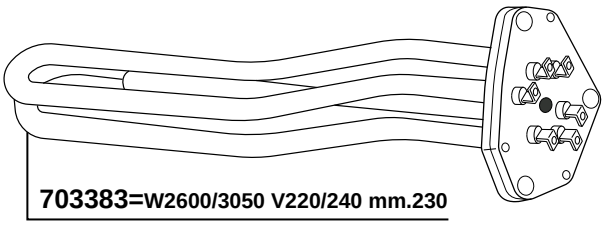

703383=W2600/3050 V220/240 mm.230

703342

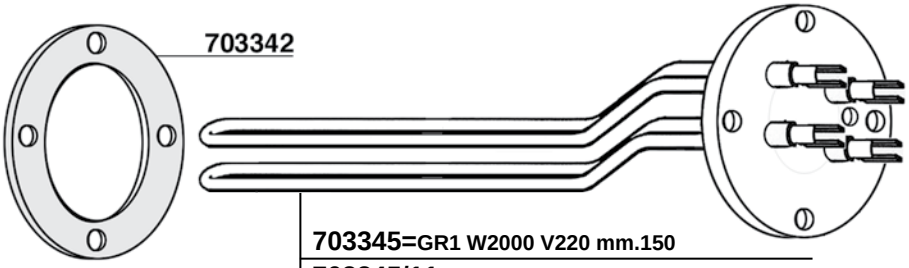

703345=GR1 W2000 V220 mm.150
703345/11=GR1 W1400 V110 INCOLOY mm.150
703346=GR2 W3500 V220 mm.340
703346/11=GR2 W2600 V110 mm.340
703376=GR3 W5000 V220 mm.540

703237

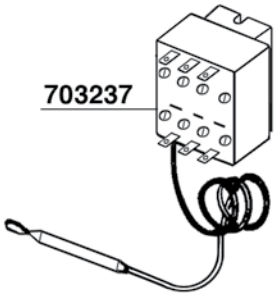

401378/T

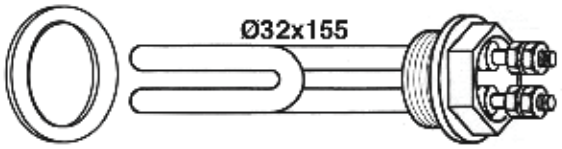

703348 =V220 W1350
703348/11 =V110 W1350

400826/T
TEFLON



560083 = W1800 V220 mm.105

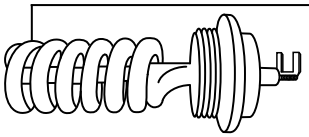

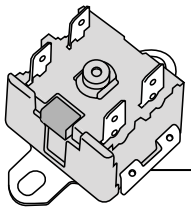

300001
125°

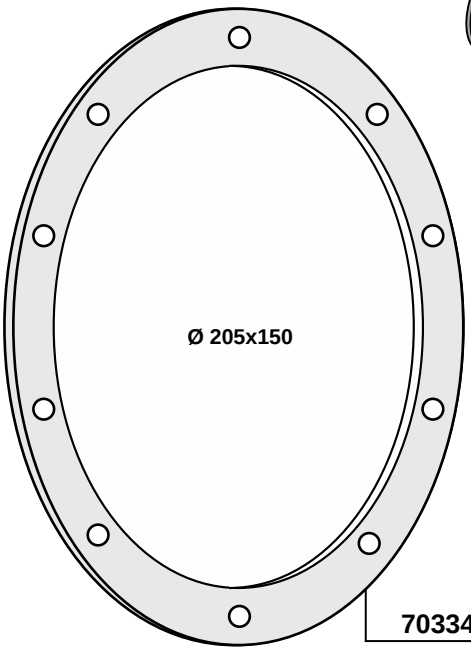

703343

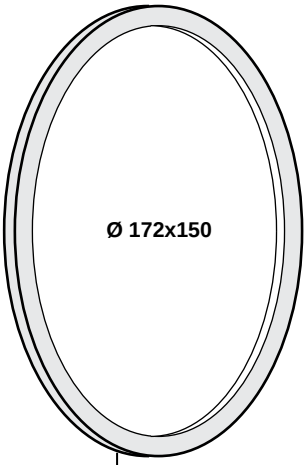

703344

703356

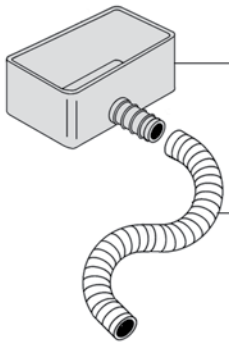

700031/16=Ø16x23

703369
ELLISSE

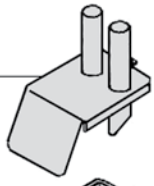

703368
ELLISSE

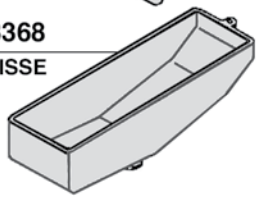



618970

618968



615626/A
CE certificato certified

524552/R

700750/V

524554

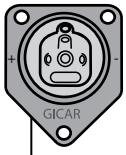

620405/C

617902

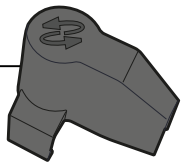

615978/T

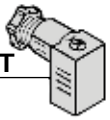

615979



617903/G



530148



551937

700648/11 V110/60
700648/22 V230/50/60
700648/24 V240/50/60

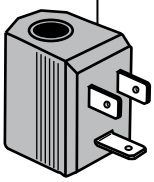

615978/P

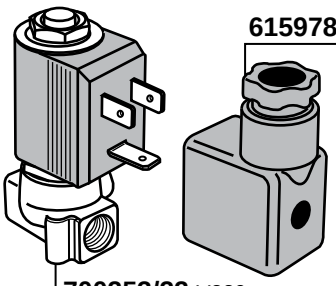

700253/22 V220
700253/11 V110

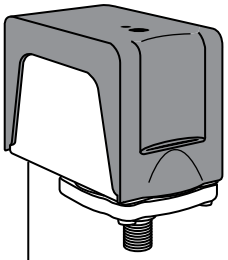

616597 CE/UL

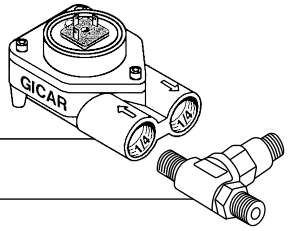

620405

703352

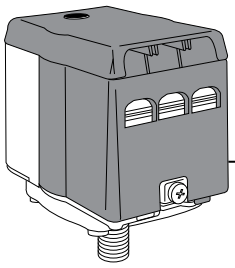

616592 CE
SIRAI

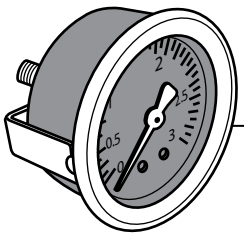

703353
BOILER

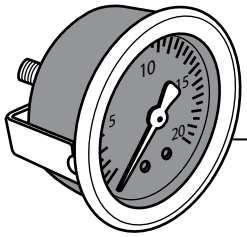

703354
POMPA

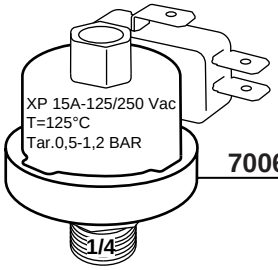

700662

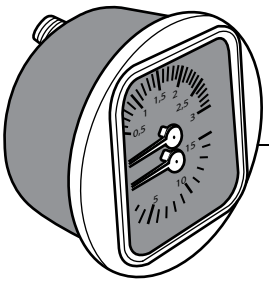

703355
POMPA

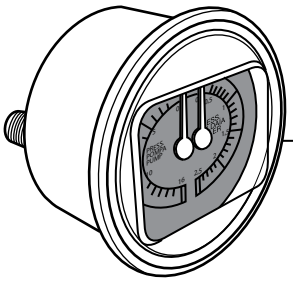

703357
ELISSE

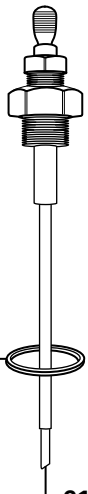

524554

612601 120mm
612601/L 140mm

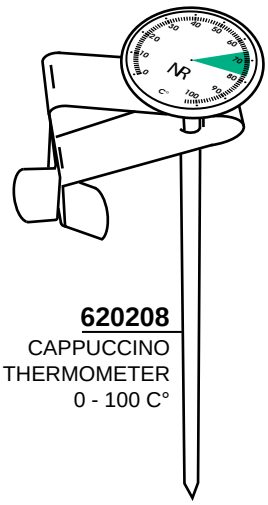

620208
CAPPUCCINO
THERMOMETER
0 - 100 C°



703371
Mod. DE

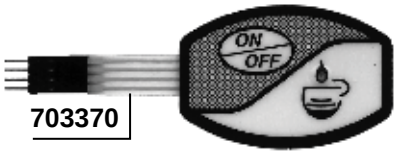

703370

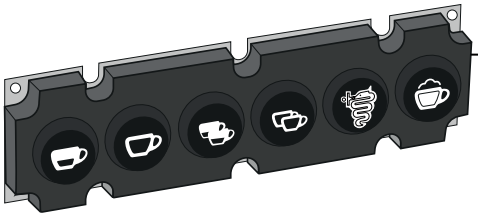

703386

703372



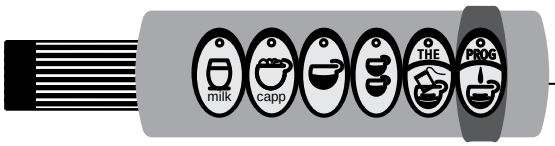

703381

703380

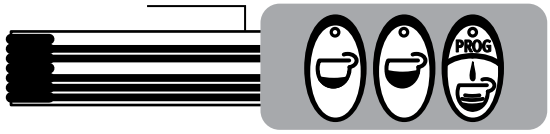



703373
Mod. TE

620737
GICAR CODE 9.9.12.00 G

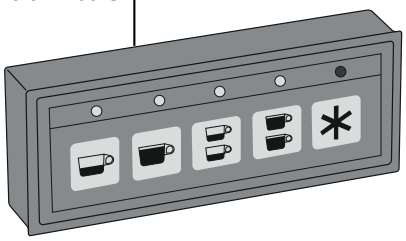

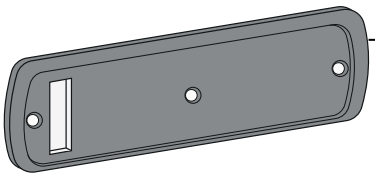

703390 GREY
703391 BLUE
703392 BLACK

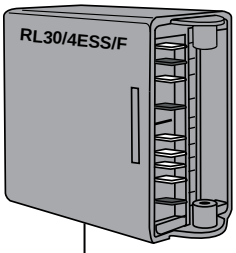

703389 230V
GICAR CODE 9.1.24.20 G

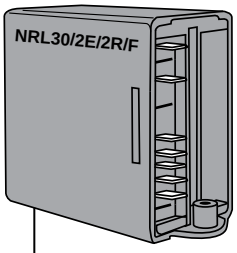

703382 230V
GICAR CODE 9.1.41.22 G 02

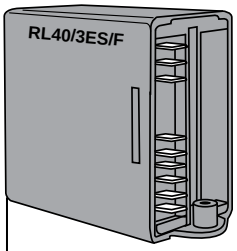

703312 220V
GICAR CODE 9.1.15.52 G
703312/11 110V
GICAR CODE 9.1.15.53 G

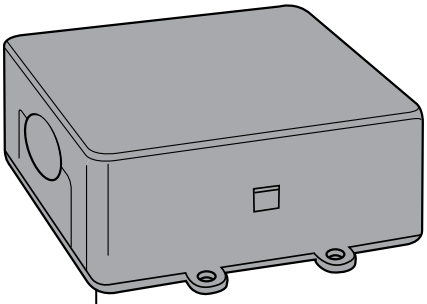

703377 ELLISSE GR1-2-3 220V
GICAR CODE 9.5.22.02 G 00

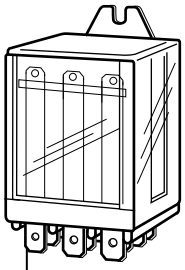

700652/22 220V

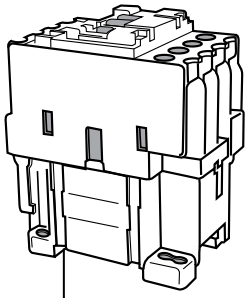

700930 220V
700931 110V

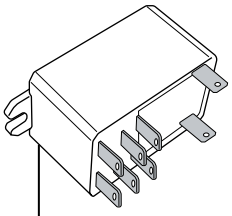

703385 240V

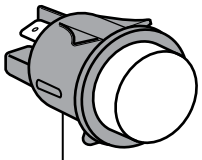

618010 RED
618010/V GREEN

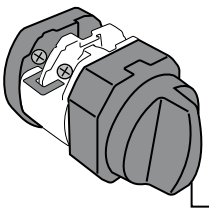

703350

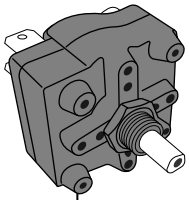

703388



617729/22 220V

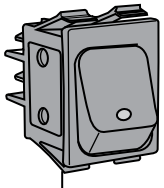

579671 BLACK

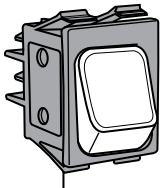

621080

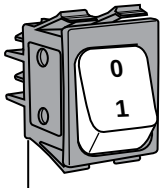

700382 ORANGE

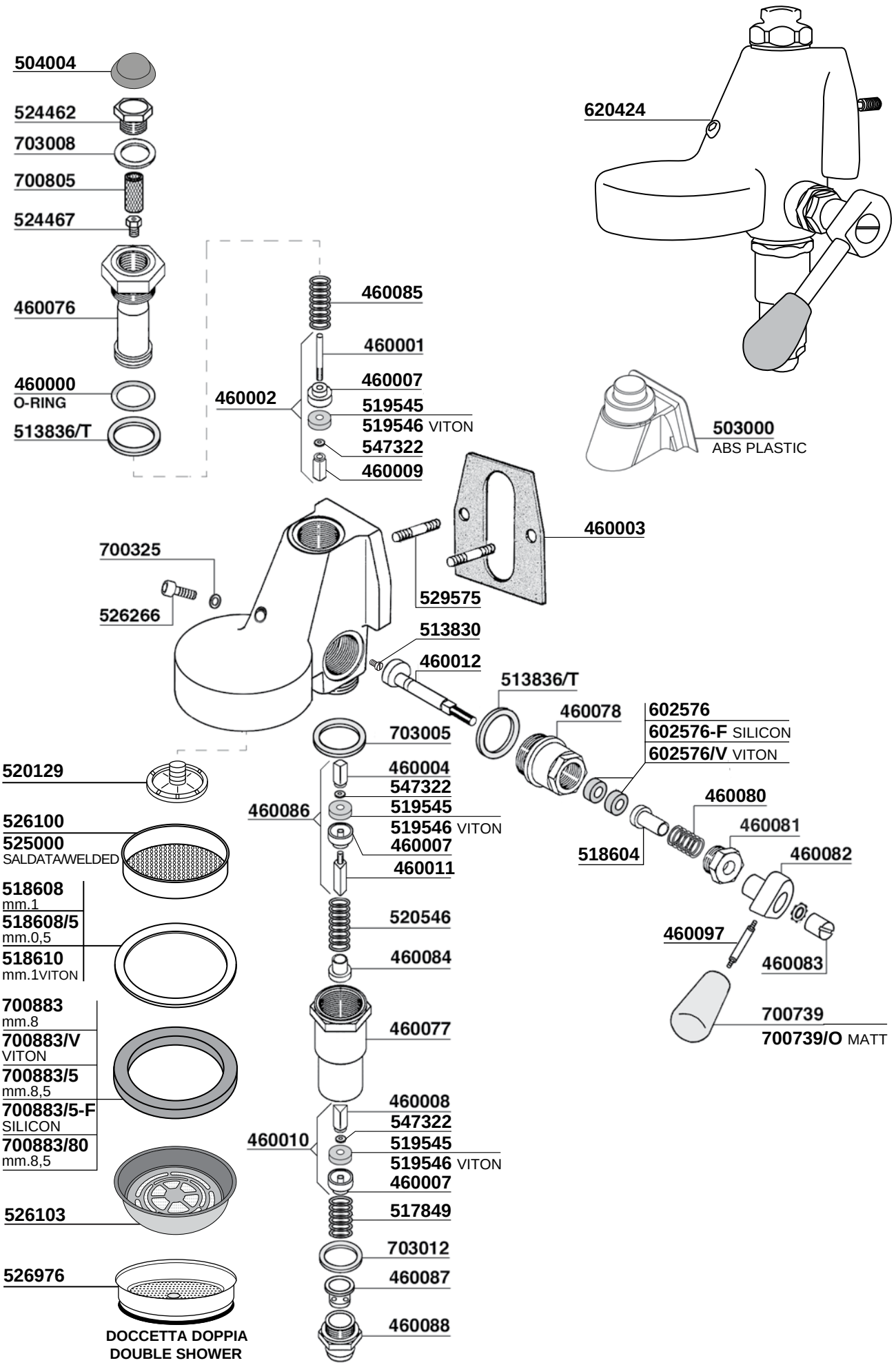
504004
524462
703008
700805
524467
460076
460000
O-RING
513836/T
460085
460001
460007
460002
519545
519546 VITON
547322
460009
620424
503000
ABS PLASTIC
460003
700325
526266
529575
513830
460012
513836/T
460078
602576
602576-F SILICON
602576/V VITON
703005
460004
547322
460086
519545
519546 VITON
460007
460011
460080
460081
518604
460082
460097
460083
700739
700739/O MATT
520129
526100
525000
SALDATA/WELDED
518608
mm.1
518608/5
mm.0,5
518610
mm.1VITON
520546
460084
700883
mm.8
700883/V
VITON
700883/5
mm.8,5
700883/5-F
SILICON
700883/80
mm.8,5
460077
460008
547322
460010
519545
519546 VITON
460007
517849
526103
703012
460087
526976
460088
DOCCETTA DOPPIA
DOUBLE SHOWER

BFC - ROYAL

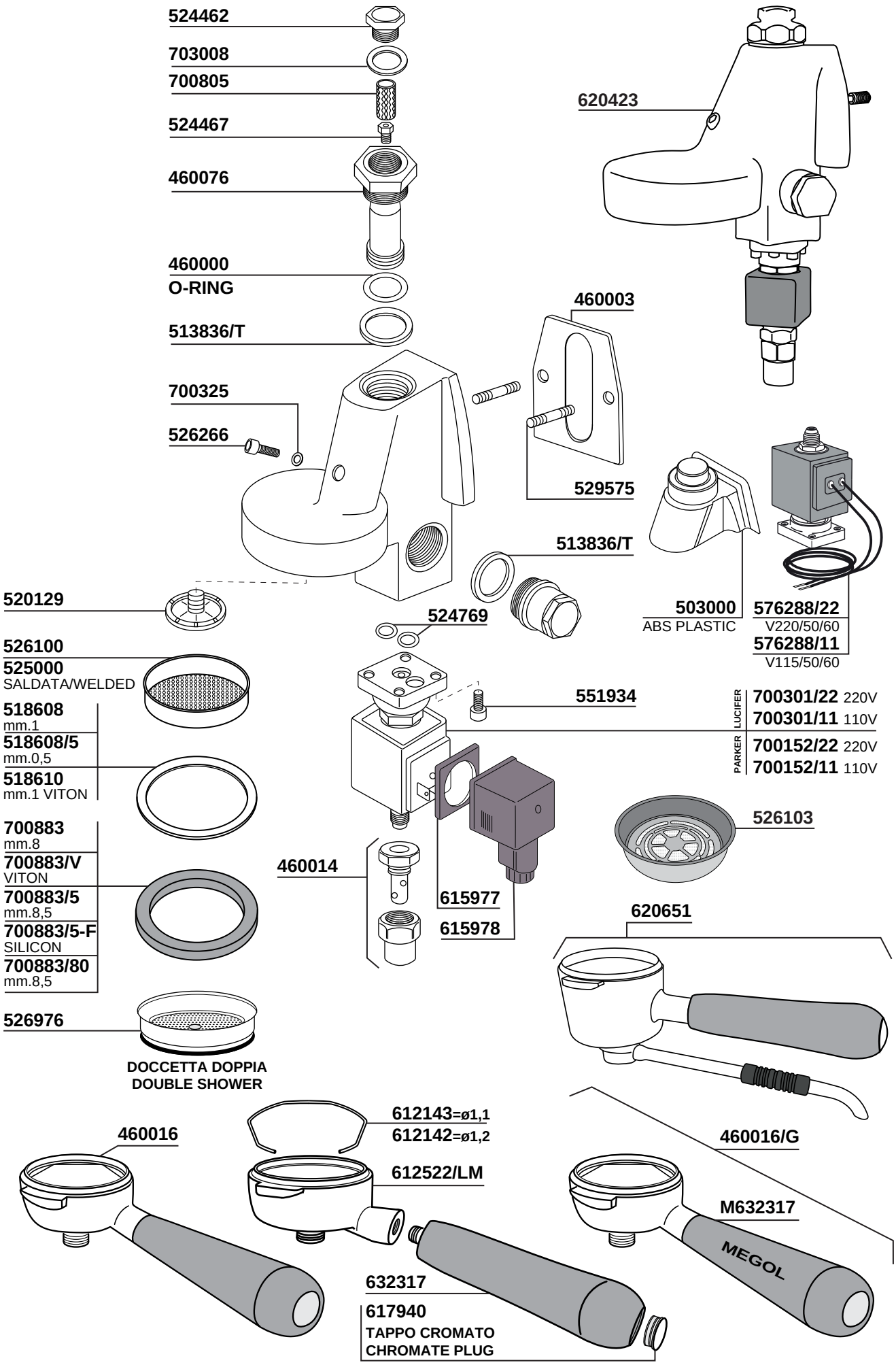
524462
703008
700805
524467
460076
460000
O-RING
513836/T
700325
526266
620423
460003
529575
513836/T
520129
524769
526100
525000
SALDATA/WELDED
518608
mm.1
518608/5
mm.0,5
518610
mm.1 VITON
700883
mm.8
700883/V
VITON
700883/5
mm.8,5
700883/5-F
SILICON
700883/80
mm.8,5
526976
DOCCETTA DOPPIA
DOUBLE SHOWER
503000
ABS PLASTIC
576288/22
V220/50/60
576288/11
V115/50/60
551934
LUCIFER
700301/22 220V
700301/11 110V
PARKER
700152/22 220V
700152/11 110V
526103
460014
615977
615978
620651
460016
612143=ø1,1
612142=ø1,2
612522/LM
460016/G
M632317
MEGOL
632317
617940
TAPPO CROMATO
CHROMATE PLUG

BFC - ROYAL

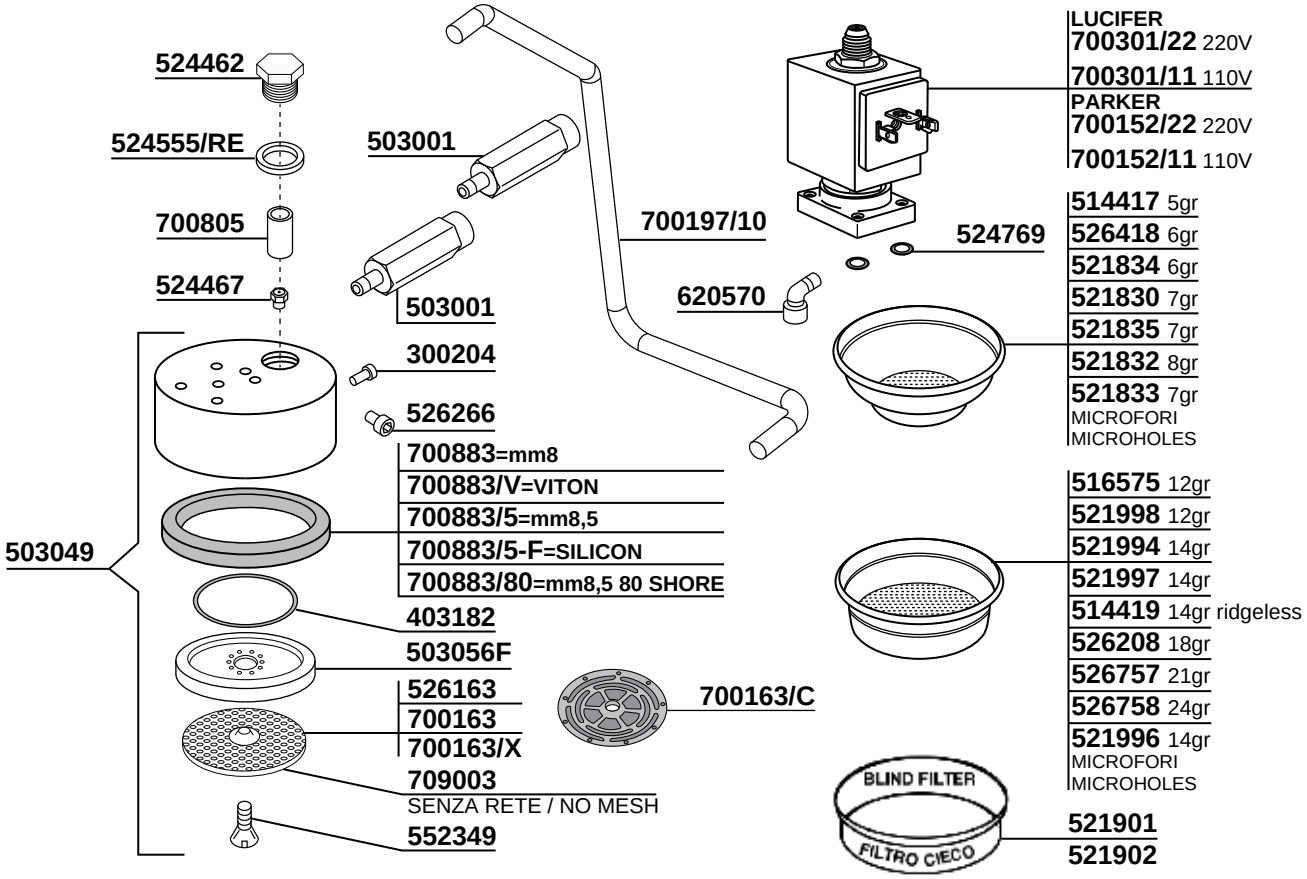
524462
524555/RE
700805
524467
503001
503001
700197/10
620570
300204
526266
503049
700883=mm8
700883/V=VITON
700883/5=mm8,5
700883/5-F=SILICON
700883/80=mm8,5 80 SHORE
403182
503056F
526163
700163
700163/X
709003
SENZA RETE / NO MESH
552349
700163/C
LUCIFER
700301/22 220V
700301/11 110V
PARKER
700152/22 220V
700152/11 110V
524769
514417 5gr
526418 6gr
521834 6gr
521830 7gr
521835 7gr
521832 8gr
521833 7gr
MICROFORI
MICROHOLES
516575 12gr
521998 12gr
521994 14gr
521997 14gr
514419 14gr ridgeless
526208 18gr
526757 21gr
526758 24gr
521996 14gr
MICROFORI
MICROHOLES
BLIND FILTER
FILTRO CIECO
521901
521902

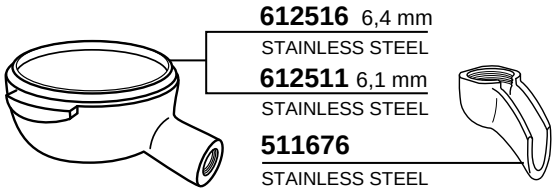
612516 6,4 mm
STAINLESS STEEL
612511 6,1 mm
STAINLESS STEEL
511676
STAINLESS STEEL

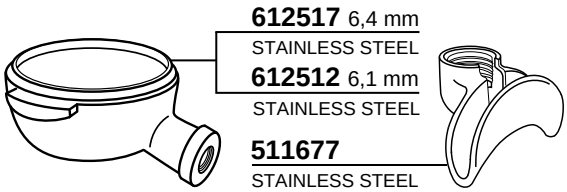
612517 6,4 mm
STAINLESS STEEL
612512 6,1 mm
STAINLESS STEEL
511677
STAINLESS STEEL

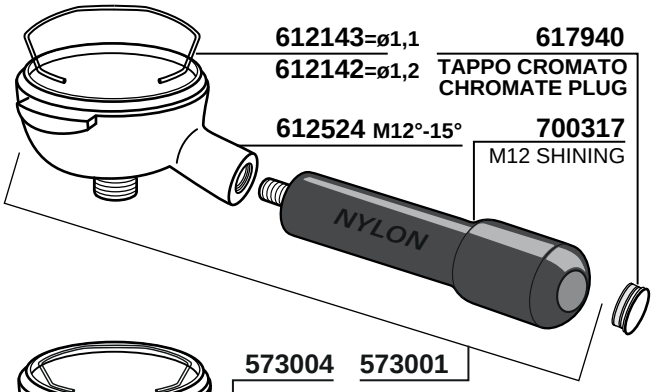
612143=ø1,1
612142=ø1,2
617940
TAPPO CROMATO
CHROMATE PLUG
612524 M12°-15°
700317
M12 SHINING
NYLON

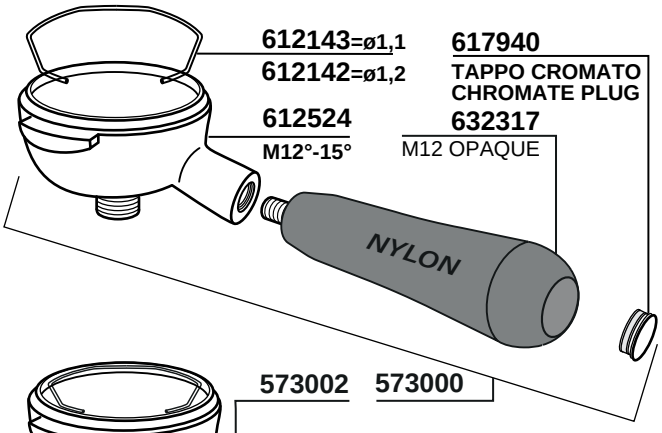
612143=ø1,1
612142=ø1,2
617940
TAPPO CROMATO
CHROMATE PLUG
612524
M12°-15°
632317
M12 OPAQUE
NYLON

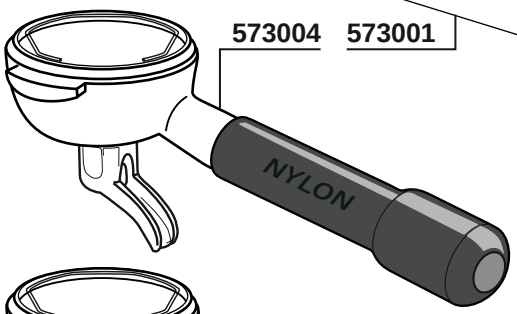
573004
573001
NYLON

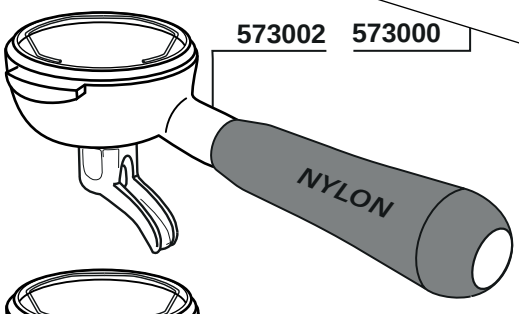
573002
573000
NYLON

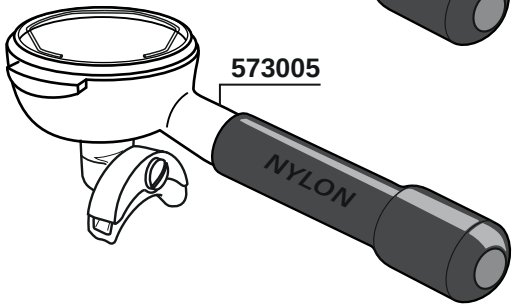
573005
NYLON

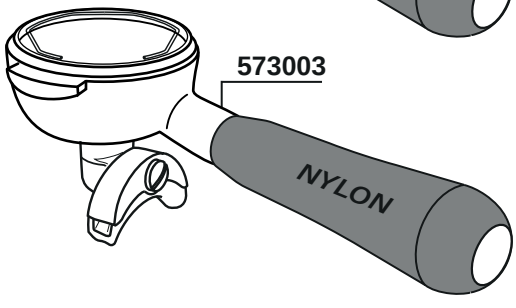
573003
NYLON

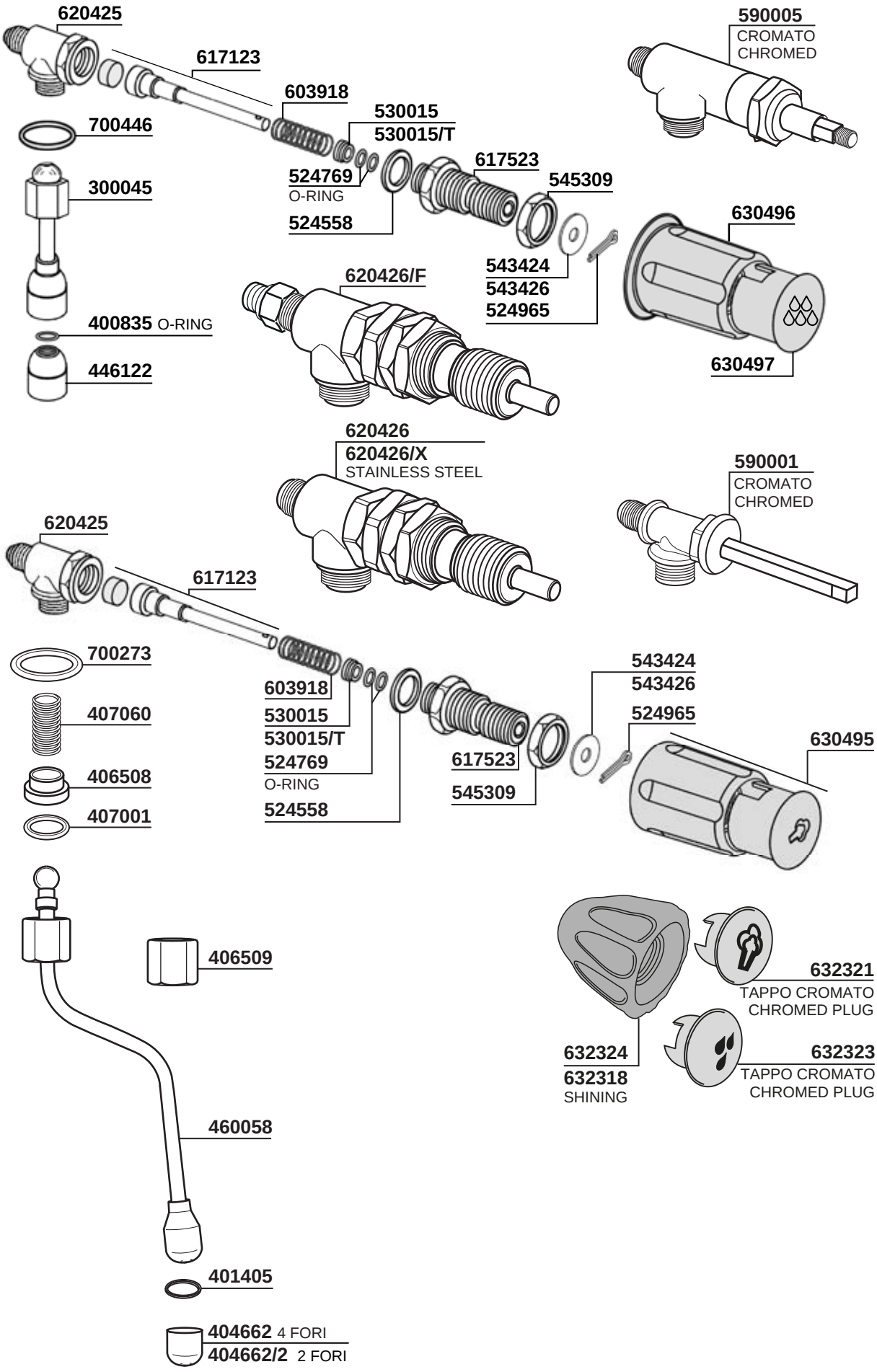
620425
617123
603918
530015
530015/T
700446
524769
O-RING
524558
617523
545309
543424
543426
524965
300045
400835 O-RING
446122
620426/F
590005
CROMATO
CHROMED
630496
630497
620426
620426/X
STAINLESS STEEL
590001
CROMATO
CHROMED
620425
617123
700273
407060
406508
407001
603918
530015
530015/T
524769
O-RING
524558
617523
545309
543424
543426
524965
630495
406509
460058
401405
404662 4 FORI
404662/2 2 FORI
632321
TAPPO CROMATO
CHROMED PLUG
632324
632318
SHINING
632323
TAPPO CROMATO
CHROMED PLUG

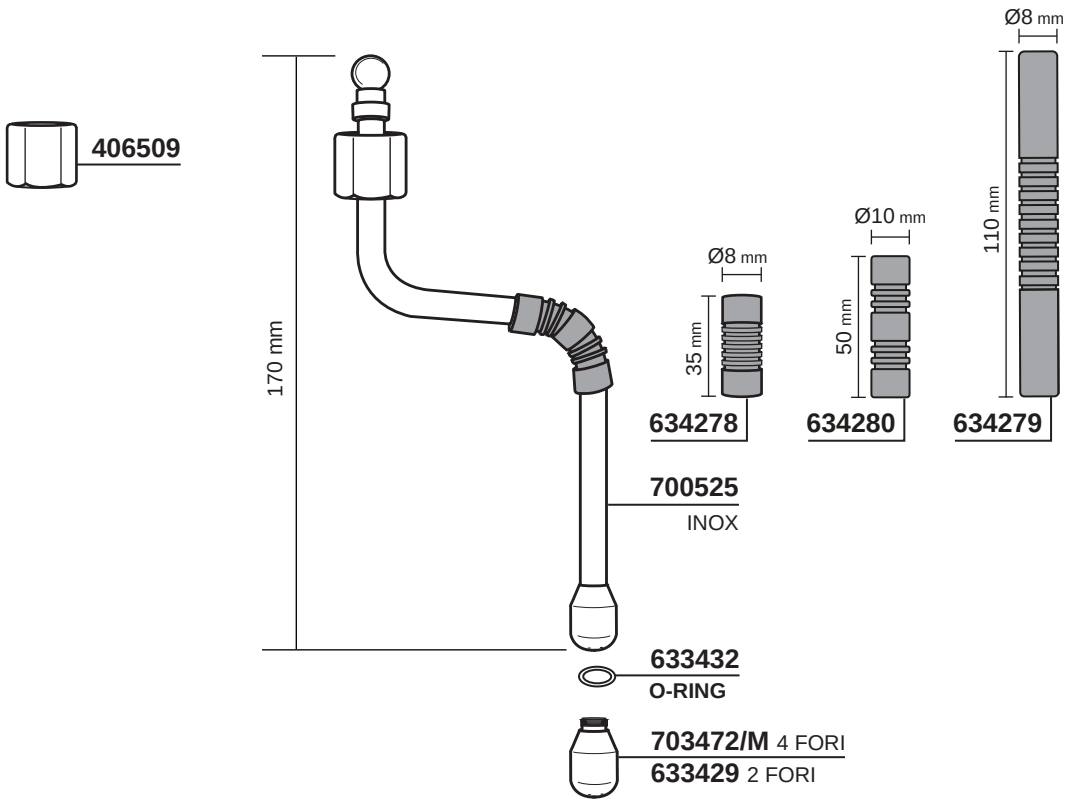
406509
170 mm
Ø8 mm
35 mm
634278
Ø10 mm
50 mm
634280
Ø8 mm
110 mm
634279
700525
INOX
633432
O-RING
703472/M 4 FORI
633429 2 FORI

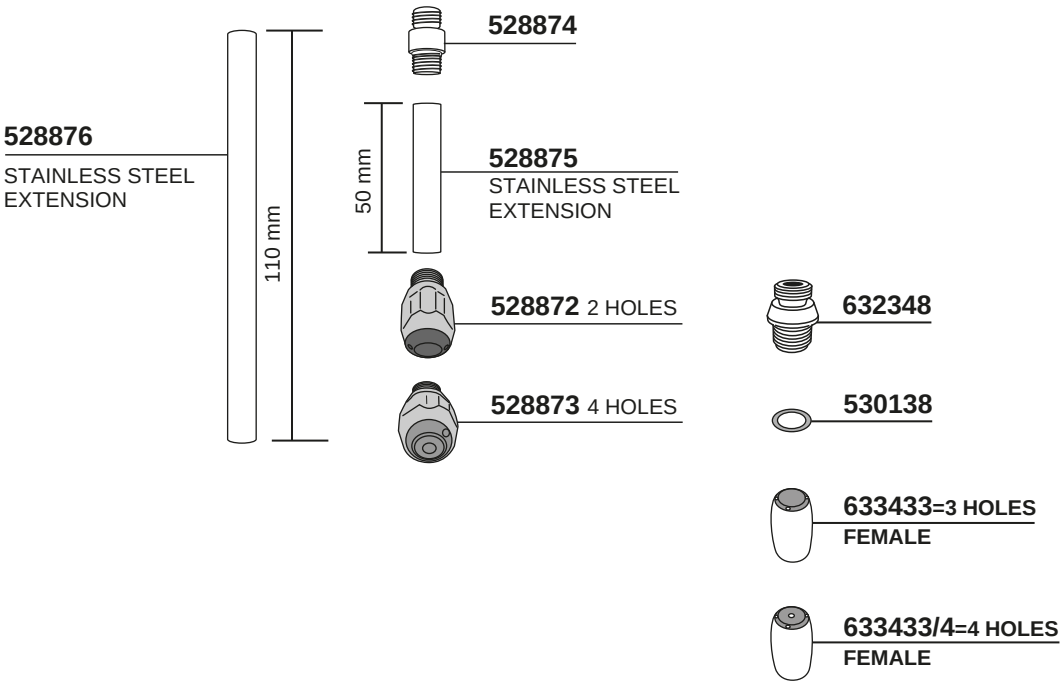
528876
STAINLESS STEEL
EXTENSION
110 mm
528874
50 mm
528875
STAINLESS STEEL
EXTENSION
528872 2 HOLES
528873 4 HOLES
632348
530138
633433=3 HOLES
FEMALE
633433/4=4 HOLES
FEMALE

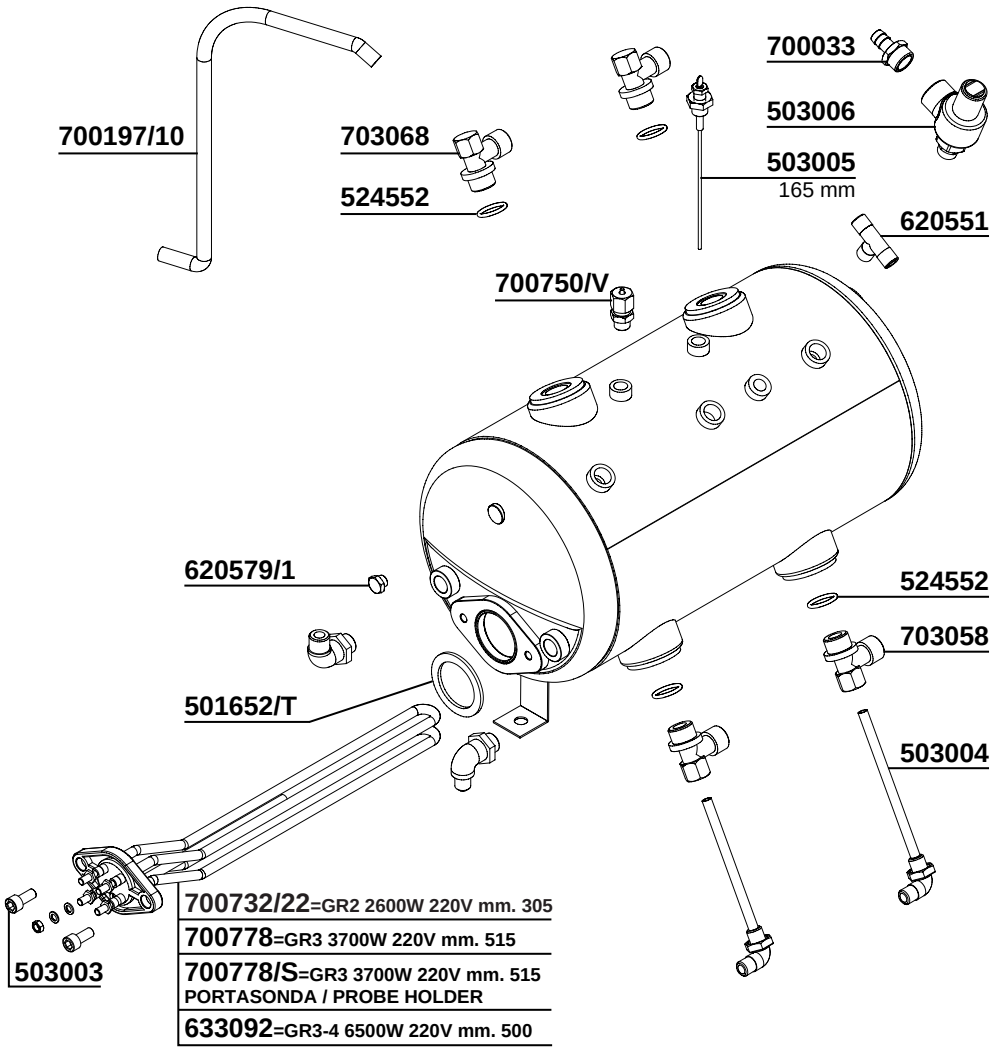
700197/10
703068
524552
700033
503006
503005
165 mm
620551
700750/V
620579/1
524552
703058
501652/T
503004
503003
700732/22=GR2 2600W 220V mm. 305
700778=GR3 3700W 220V mm. 515
700778/S=GR3 3700W 220V mm. 515
PORTASONDA / PROBE HOLDER
633092=GR3-4 6500W 220V mm. 500

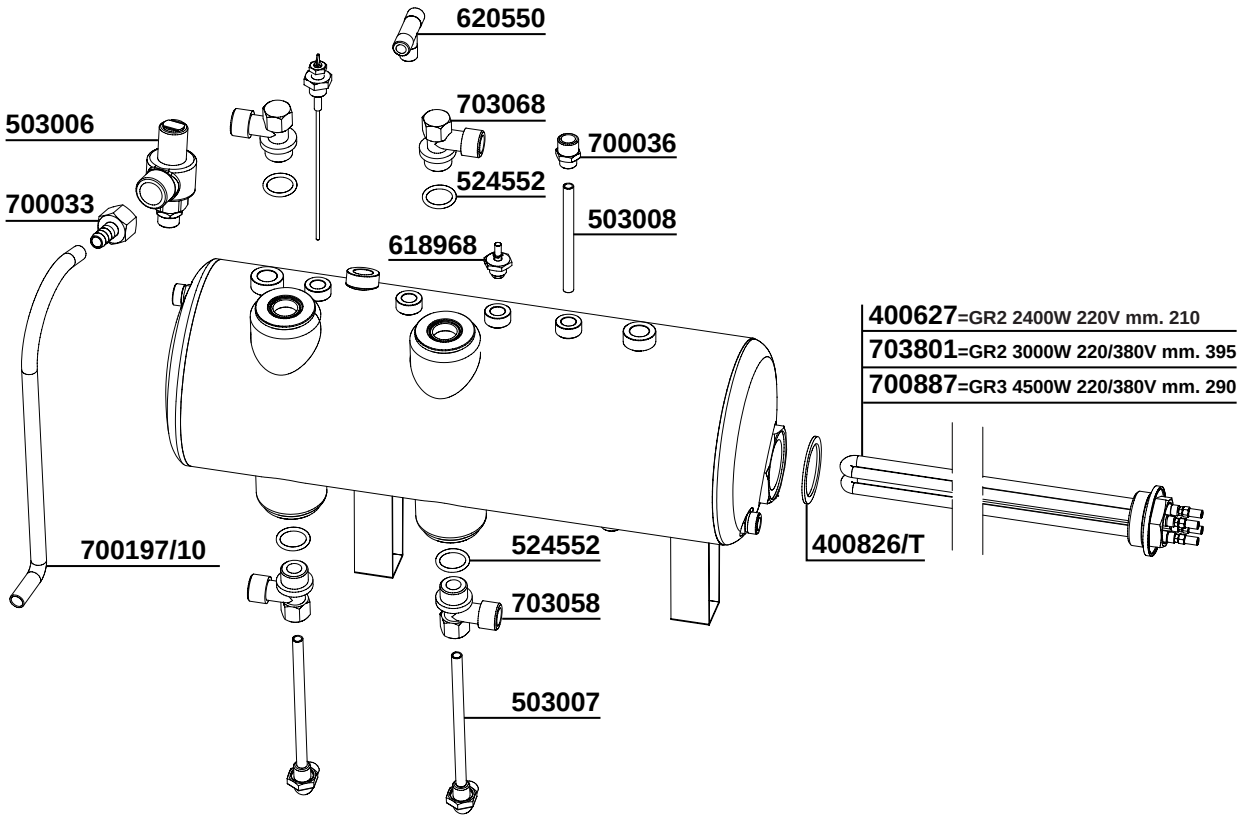
620550
503006
703068
700036
700033
524552
503008
618968
400627=GR2 2400W 220V mm. 210
703801=GR2 3000W 220/380V mm. 395
700887=GR3 4500W 220/380V mm. 290
700197/10
524552
400826/T
703058
503007

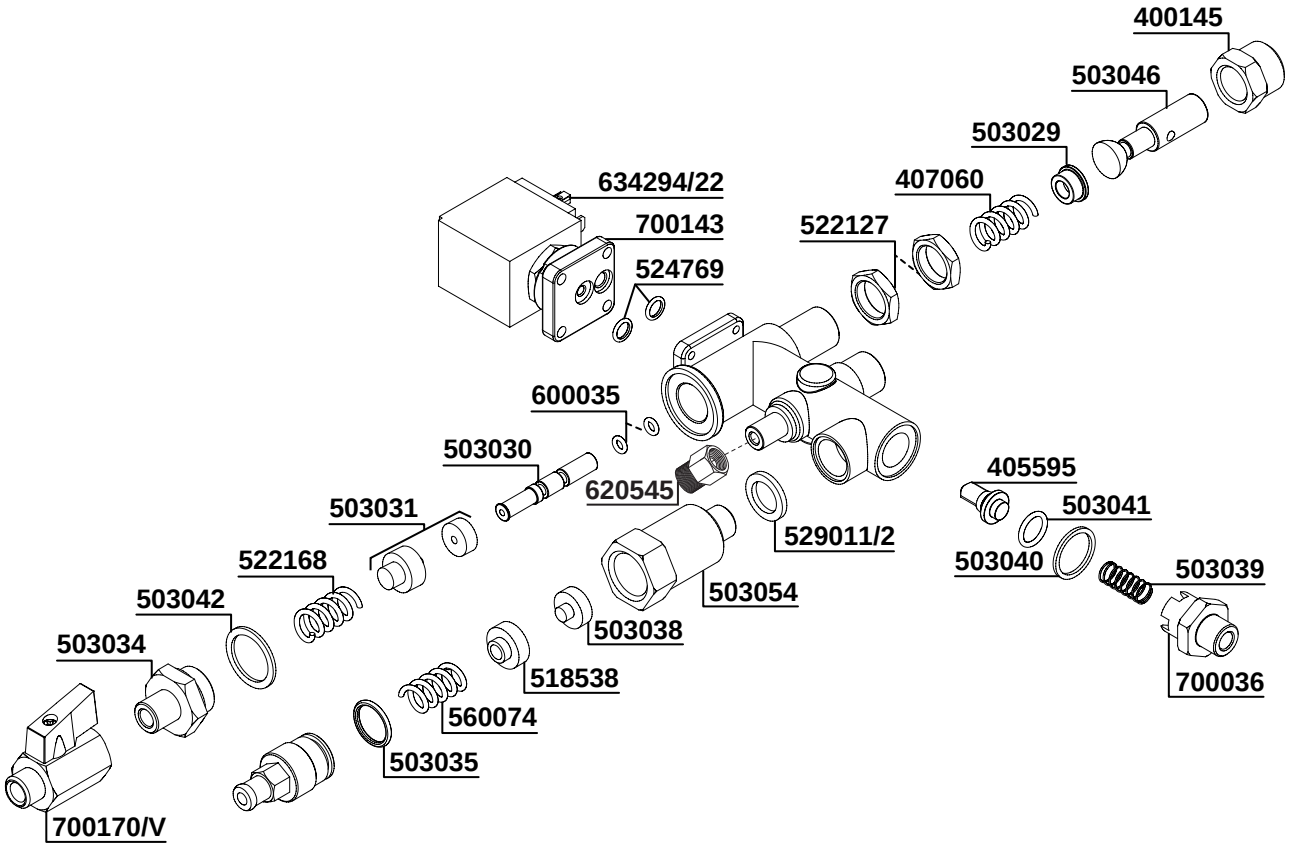
400145
503046
503029
407060
522127
634294/22
700143
524769
600035
503030
620545
503031
529011/2
405595
503041
503040
503039
522168
503054
503042
503038
503034
518538
700036
560074
503035
700170/V

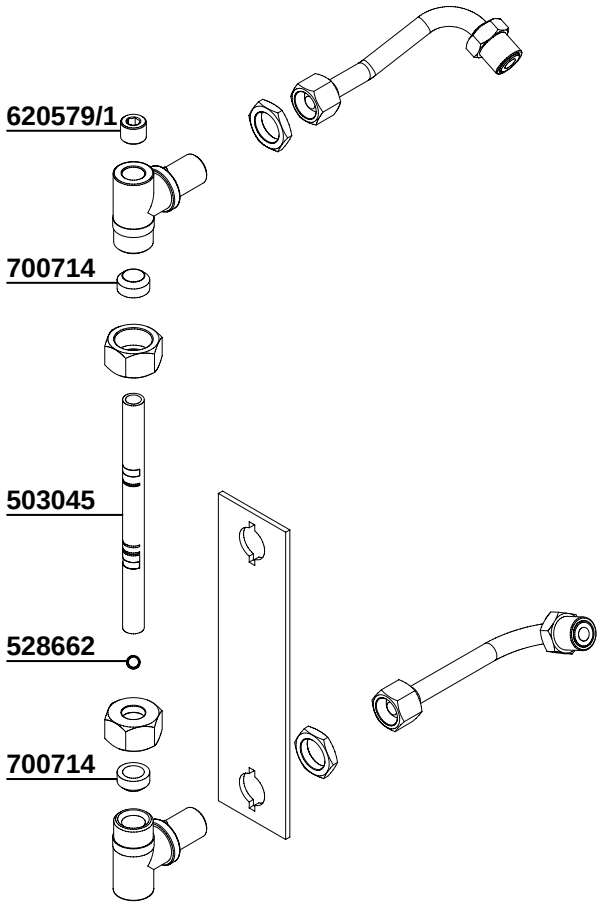
620579/1
700714
503045
528662
700714

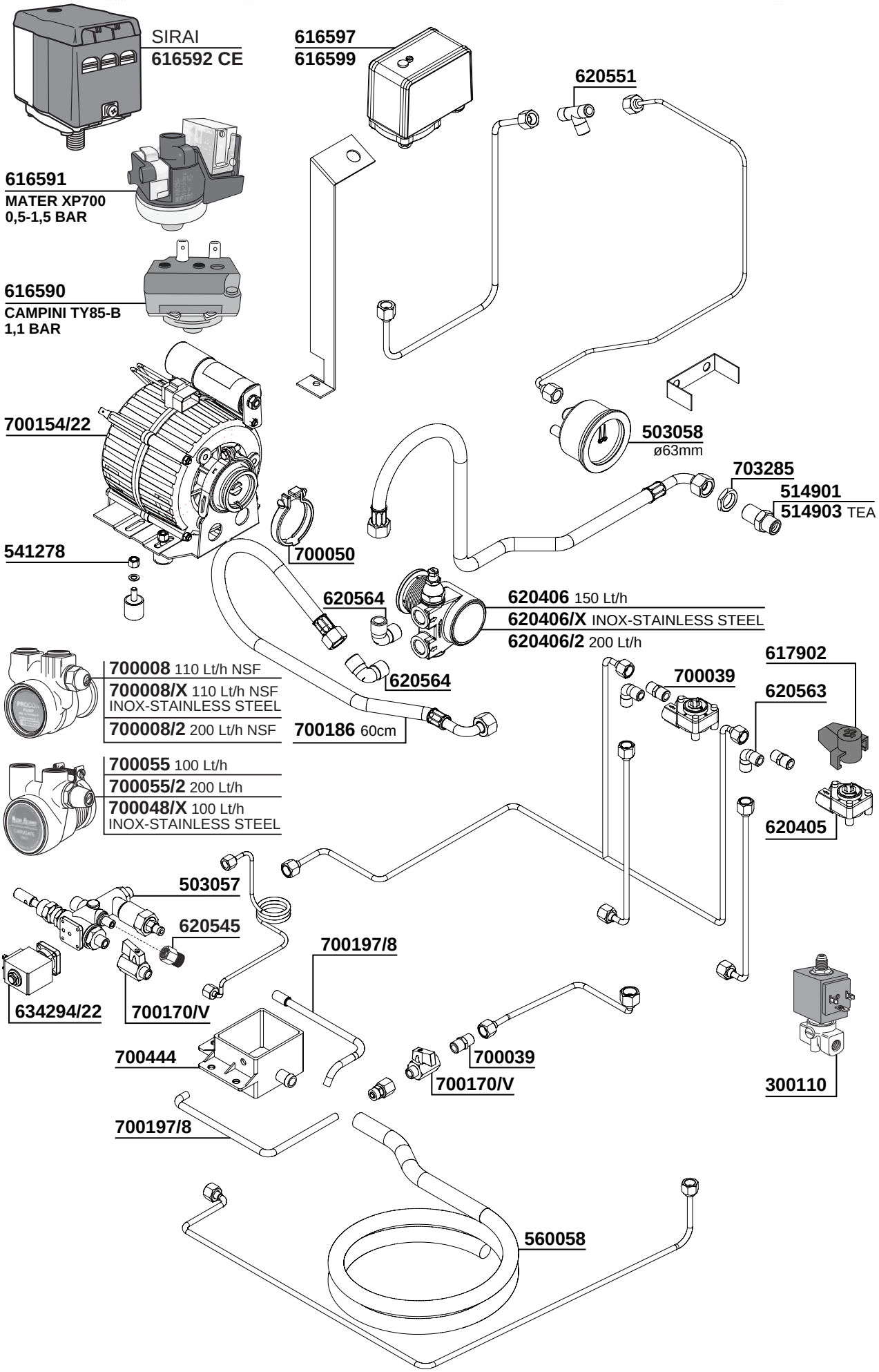
SIRAI
616592 CE
616597
616599
620551
616591
MATER XP700
0,5-1,5 BAR
616590
CAMPINI TY85-B
1,1 BAR
700154/22
503058
ø63mm
703285
514901
514903 TEA
541278
700050
620564
620406 150 Lt/h
620406/X INOX-STAINLESS STEEL
620406/2 200 Lt/h
700008 110 Lt/h NSF
700008/X 110 Lt/h NSF INOX-STAINLESS STEEL
700008/2 200 Lt/h NSF
620564
700186 60cm
700039
617902
620563
700055 100 Lt/h
700055/2 200 Lt/h
700048/X 100 Lt/h INOX-STAINLESS STEEL
620405
503057
620545
700197/8
634294/22
700170/V
700444
700039
700170/V
300110
700197/8
560058

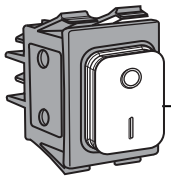

503048

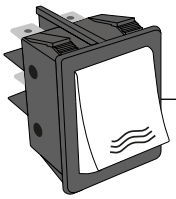

618013

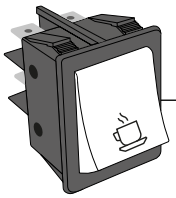

618011

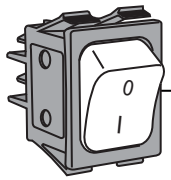

700429

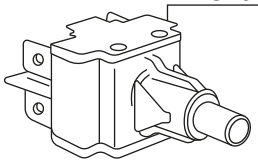

413706

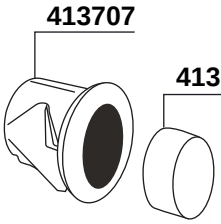

413707

413708

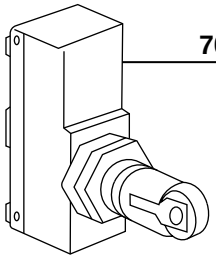

703000

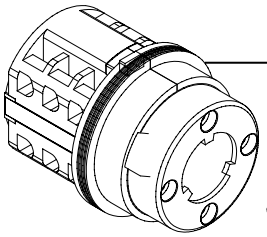

503014 20AMP
503047 32AMP

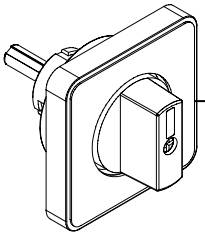

503015
CLASSICA
DELUX
DIADEMA
DOGARESSA
GRANDOGE
IMOLA
MARANELLO
MONZA
VALLELUNGA

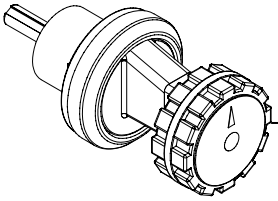

503016
LIRA

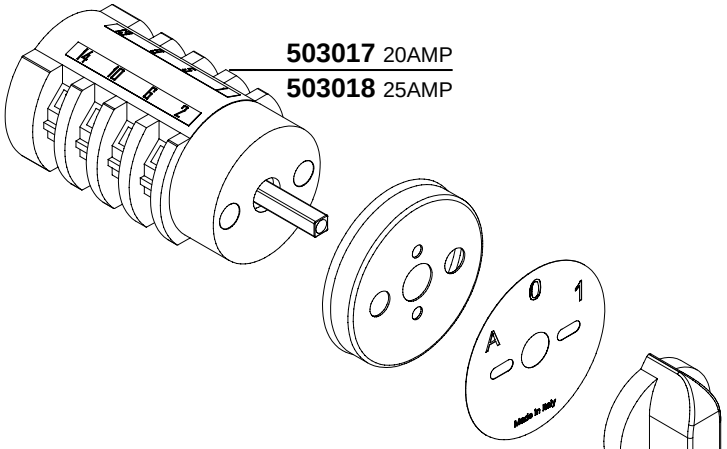

503017 20AMP
503018 25AMP

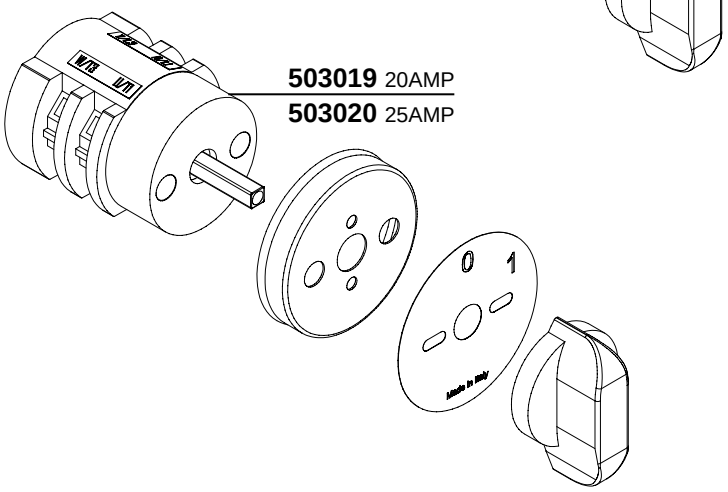

503019 20AMP
503020 25AMP

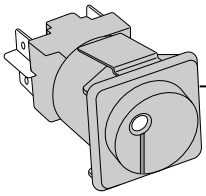

630381
IMPERO, MONZA-IMOLA-
MARANELLO, MONZA-K
ANTEA, GRANDOGE
DOGARESSA, CLASSICA

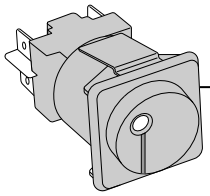

503051
SYNCHRO, DE LUX
VALLELUNGA, LIRA, LIRA-S
OPERA, CLASSICA EVA

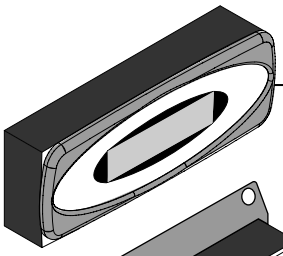

503021
GICAR CODE 9.5.31.12G
DE LUX OLD

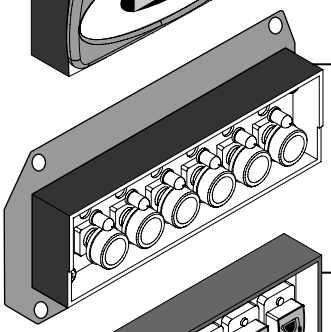

503022
MONZA
IMOLA
MARANELLO
DE LUX

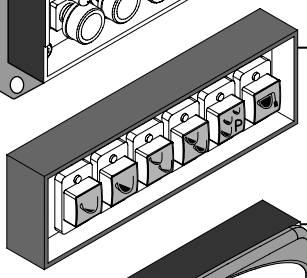

503023
GICAR CODE 9.9.07.20G
VALLELUNGA

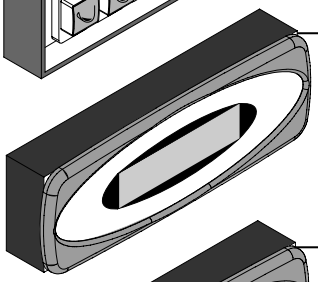

503024
GICAR CODE 9.5.13.78G
LIRA

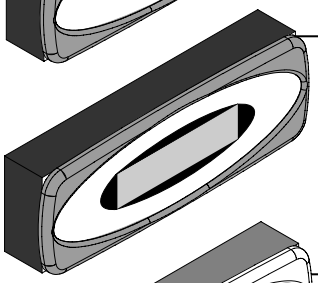

503059
GICAR CODE 9.5.31.56G
DE LUX
MONZA
MONZA K

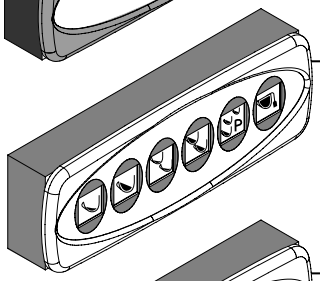

503025
GICAR CODE 9.9.07.75G
LIRA

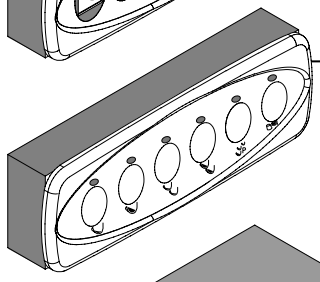

503060
GICAR CODE 9.9.14.08G
SYNCRO
VALLELUNGA

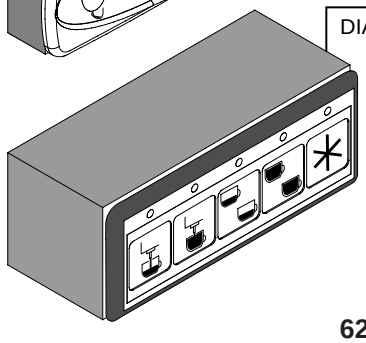

503013
DIADEMA

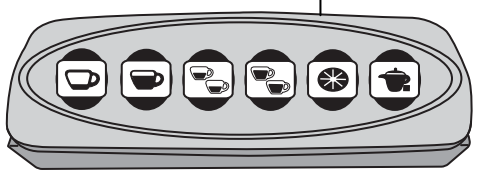

620734
GICAR CODE 9.9.07.41G

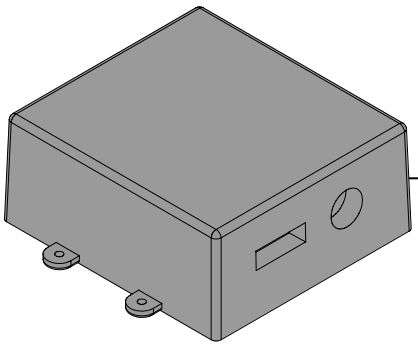

503010
ANTEA
CLASSICA
DIADEMA
DOGARESSA
GRANDOGE
TETIDE

503011
DE LUX
IMOLA
LIRA
MARANELLO
MONZA
SYNCRO
VALLELUNGA

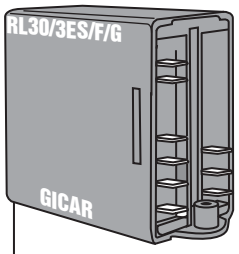

503050
GICAR CODE 9.1.29.05G00

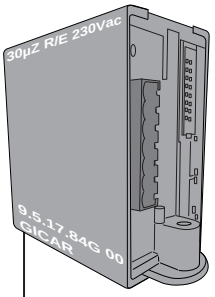

503053
GICAR CODE 9.5.17.84G00

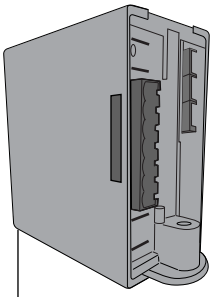

503063
GICAR CODE 9.9.02.49G

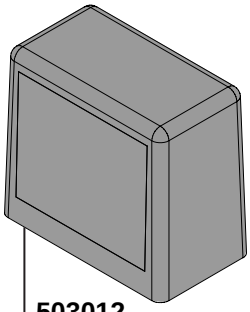

503012
GICAR CODE 9.9.04.20G
DIADEMA / DOGARESSA
IMOLA / MONZA / SYNCRO
TETIDE / VALLELUNGA

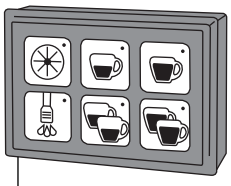

620705
GICAR CODE 9.9.09.28

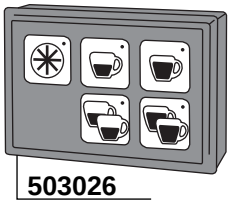

503026
GRANDOGE



620748
GICAR CODE 8.9.48.76

503061
GICAR CODE 9.9.09.62G

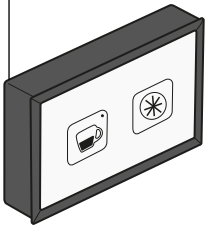

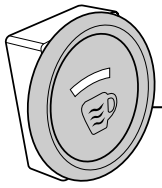

503027

BRASILIA

GRUPPO BE

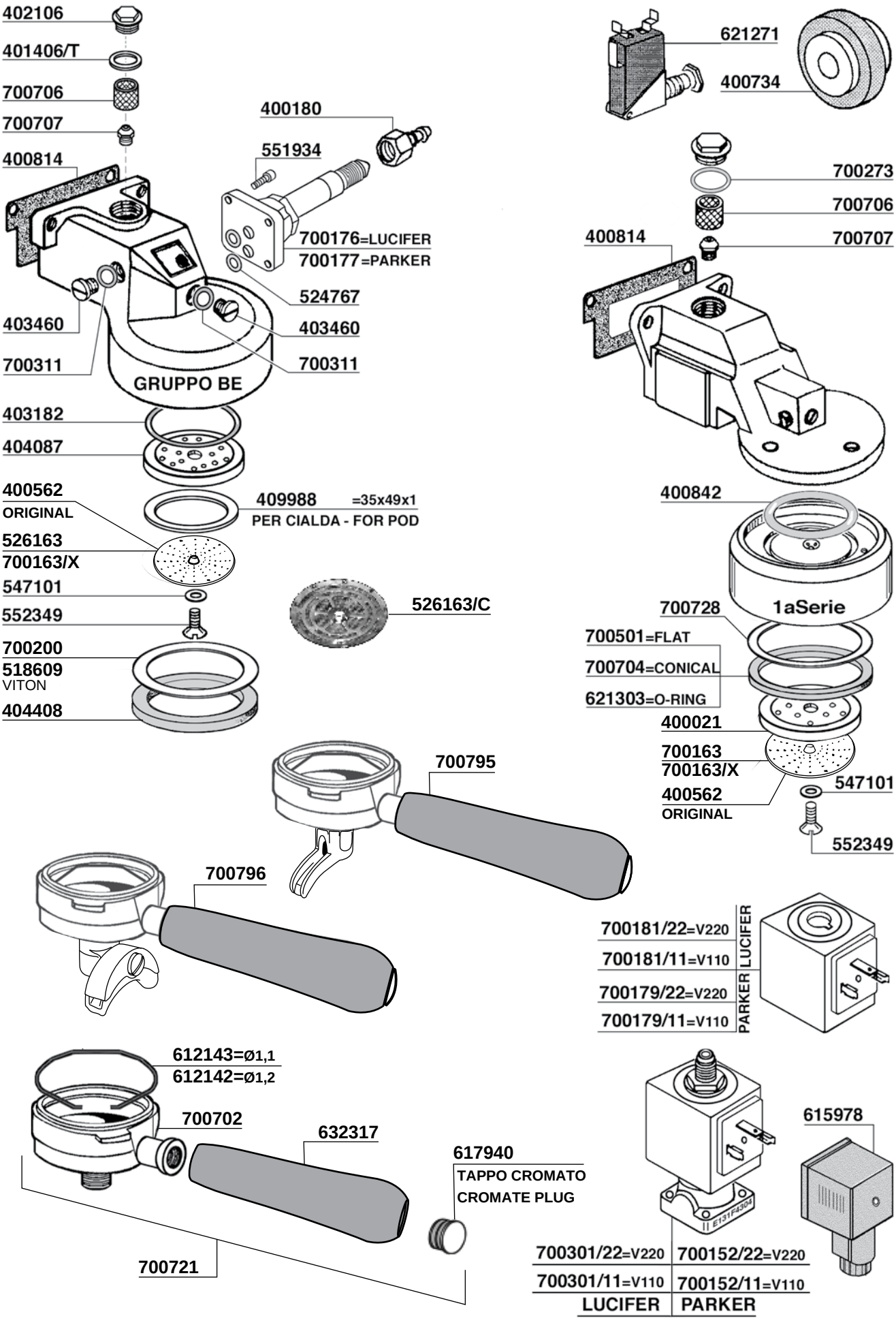

BRASILIA

GRUPPO B61

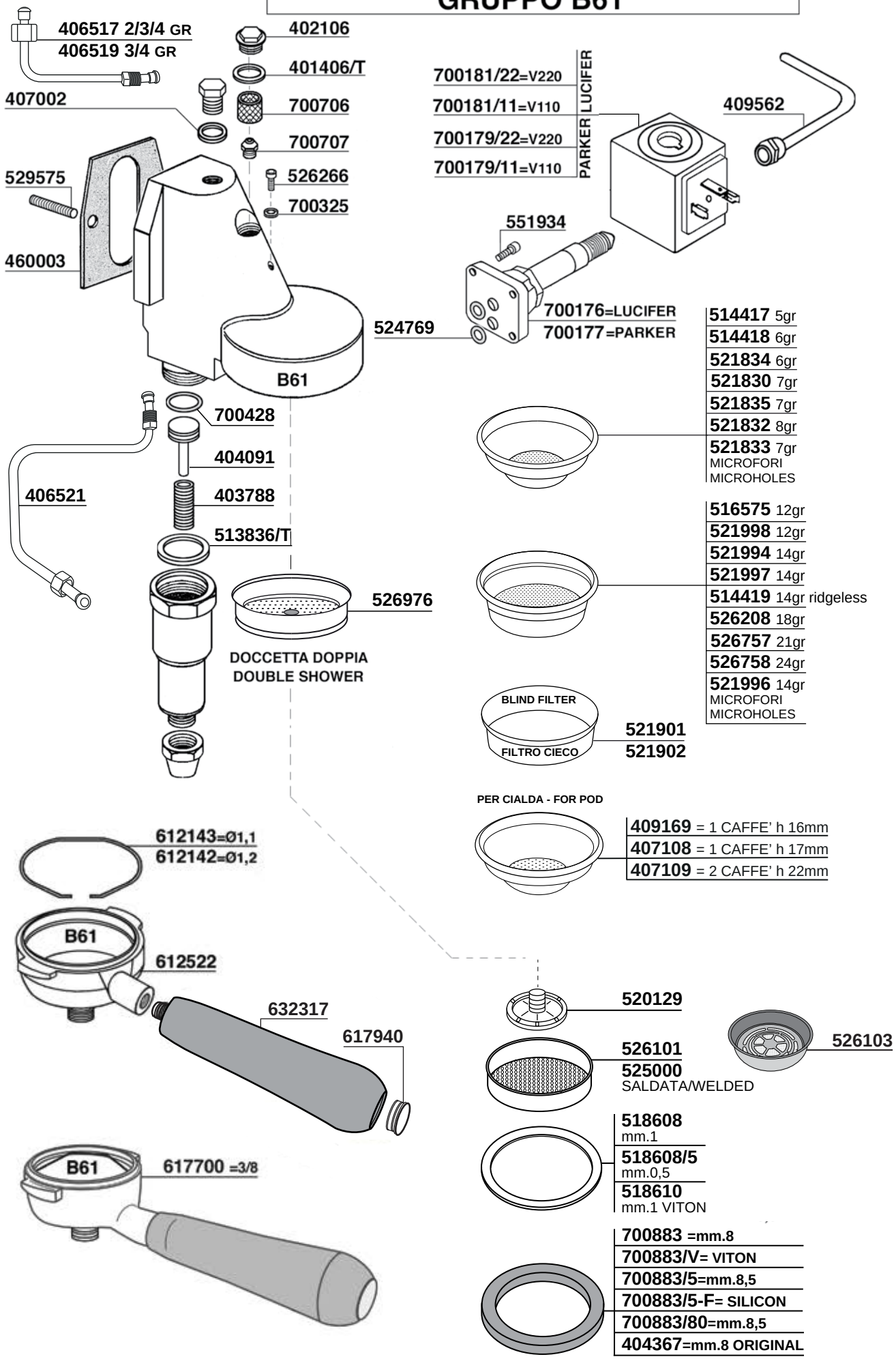

BRASILIA

Tav. 03

GRUPPO LEVA

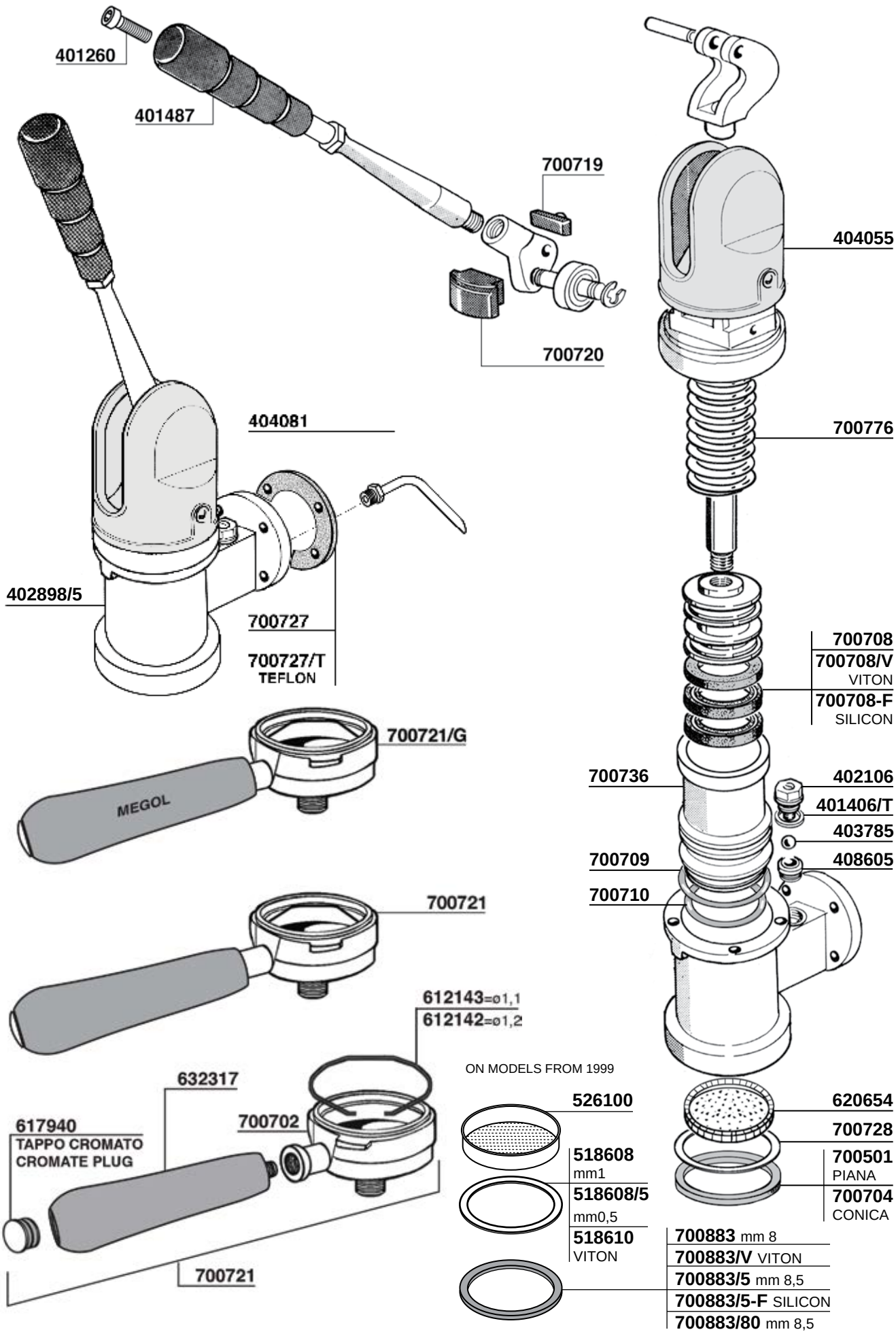

BRASILIA

RUBINETTI BAR-AMERICA

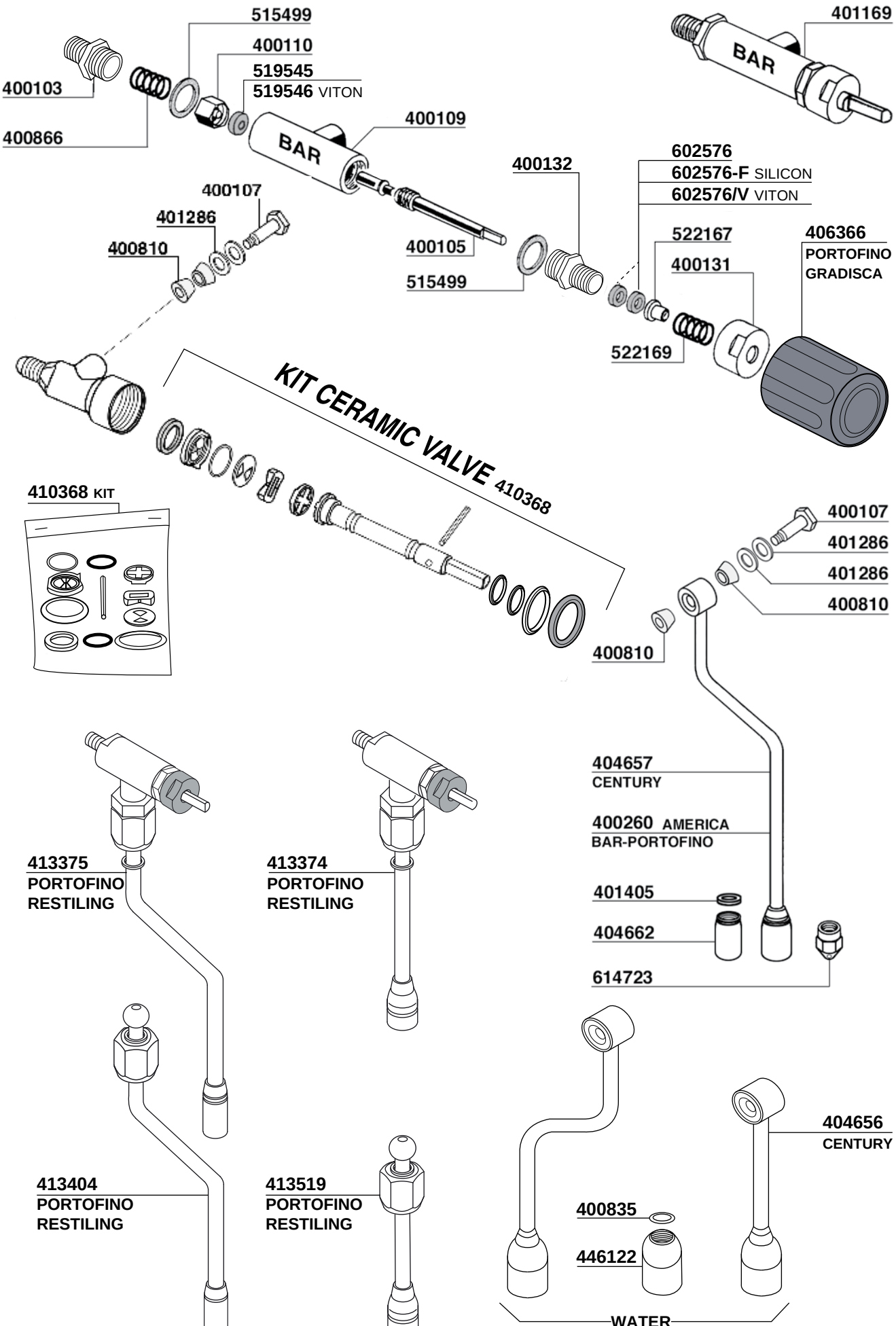

BRASILIA

RUBINETTI

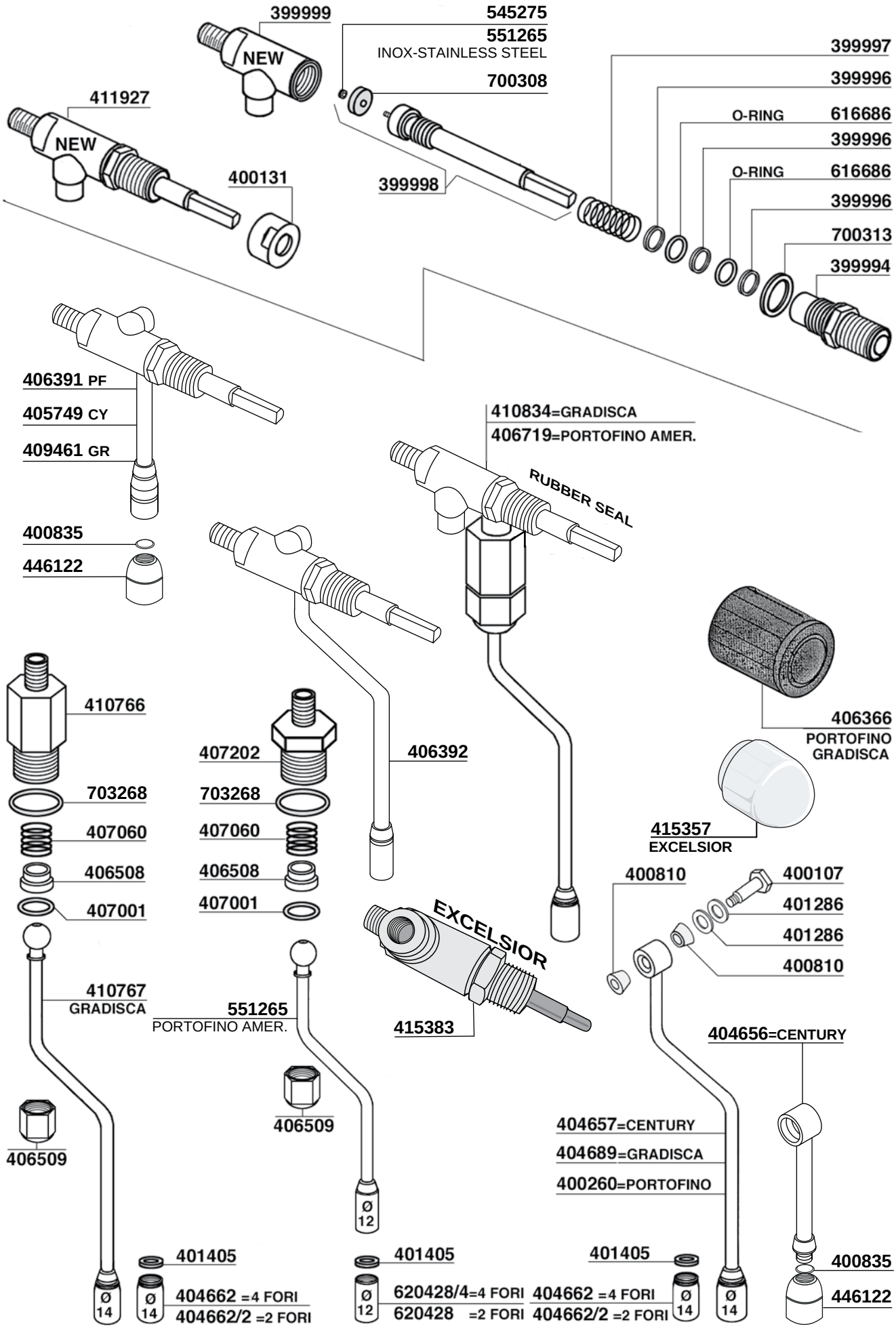

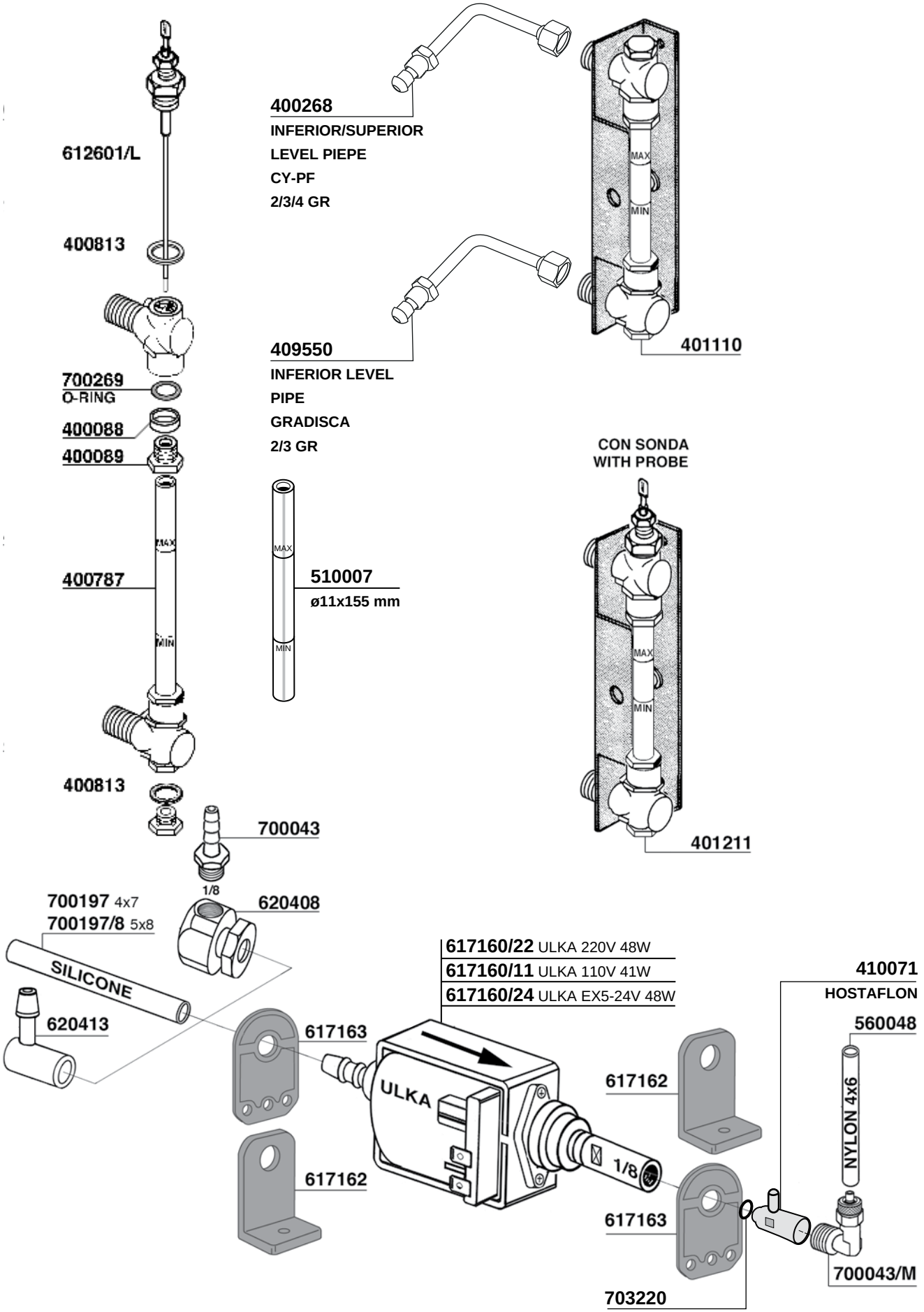
612601/L
400813
700269
O-RING
400088
400089
400787
400813
700043
1/8
620408
700197 4x7
700197/8 5x8
SILICONE
620413
400268
INFERIOR/SUPERIOR
LEVEL PIEPE
CY-PF
2/3/4 GR
409550
INFERIOR LEVEL
PIPE
GRADISCA
2/3 GR
MAX
MIN
401110
510007
ø11x155 mm
CON SONDA
WITH PROBE
401211
617160/22 ULKA 220V 48W
617160/11 ULKA 110V 41W
617160/24 ULKA EX5-24V 48W
617163
617162
617162
617163
703220
ULKA
1/8
410071
HOSTAFLON
560048
NYLON 4x6
700043/M

CLUB - LADY

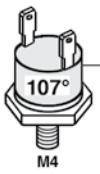

619293

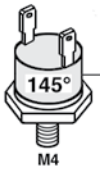

617991/G

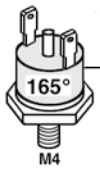

618964
MANUAL RESETTING

STEAM MICROPUMP

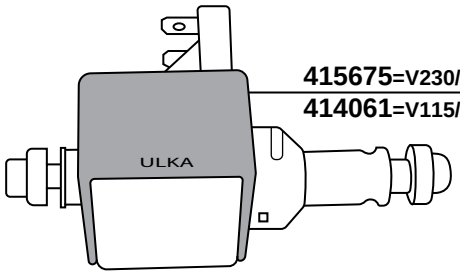

415675=V230/50
414061=V115/60

WATERLINE INDICATOR

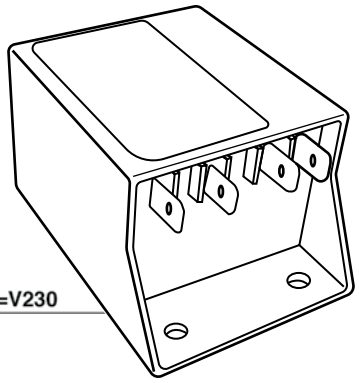

401878 =V230



400825

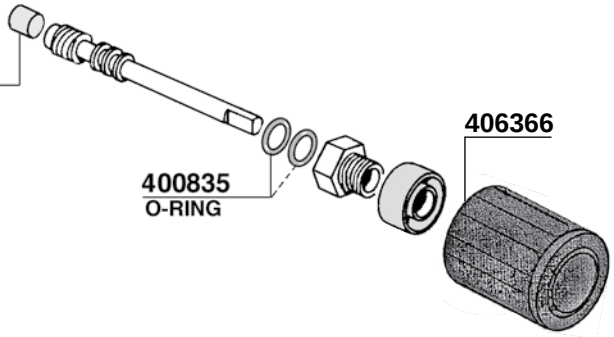

400835
O-RING

406366

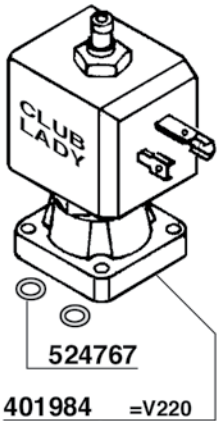

524767

401984 =V220

411443

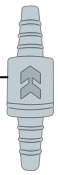

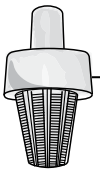

408818

CLUB - LADY

400836
O-RING

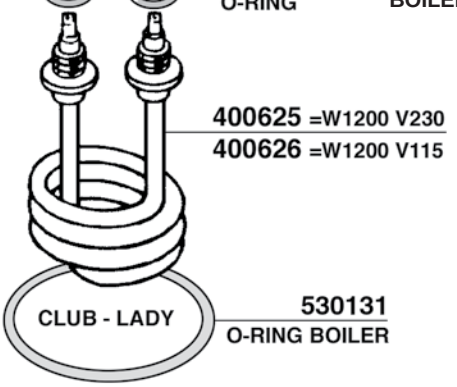

400625 =W1200 V230
400626 =W1200 V115

CLUB - LADY

530131
O-RING BOILER

401547
PIPE PUMP-
BOILER CLUB-LADY



400651

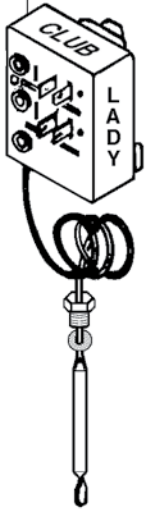

409207

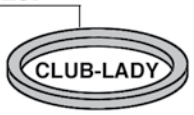

FILTER HOLDER GASKET

CLUB

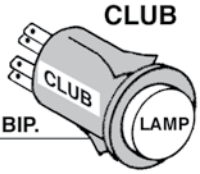

618010 V230 BIP.
SWITCH

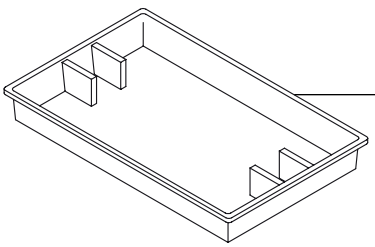

400776
DISCHARGE TANK
CLUB-LADY

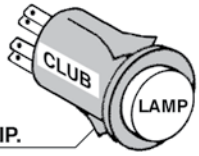

400660 V230 BIP.
PUSH BUTTON

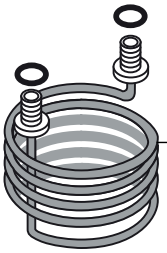

410432
HEATING ELEMENT
1000W 230V M10X1
CLUB-LADY

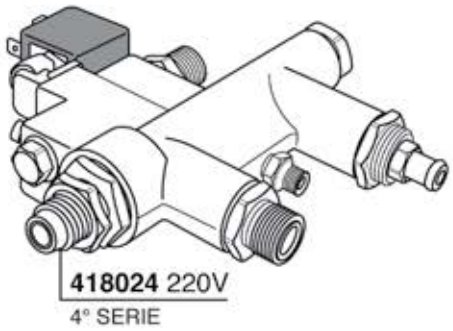
418024 220V
4° SERIE

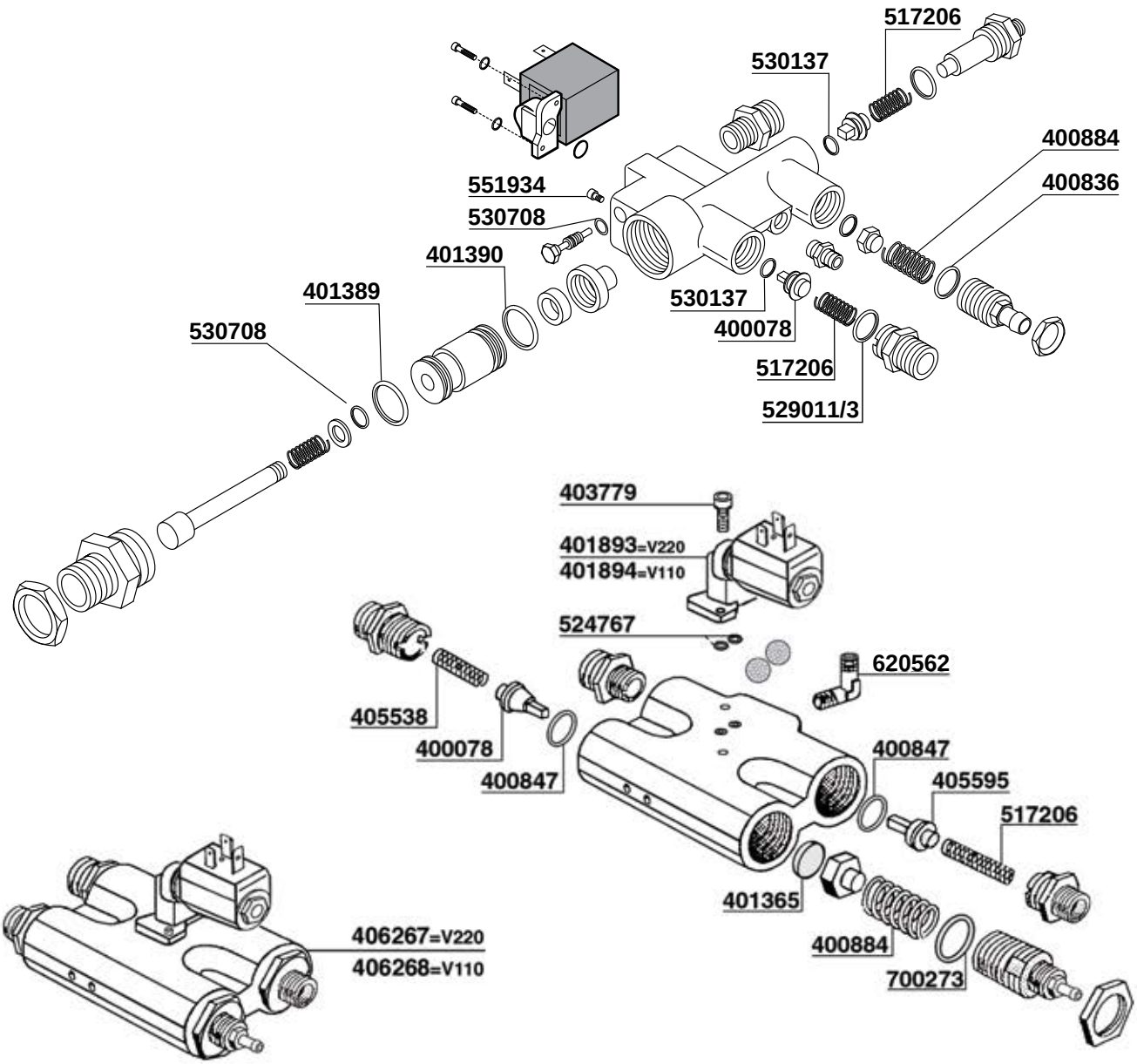
517206
530137
400884
400836
551934
530708
401390
401389
530708
530137
400078
517206
529011/3
403779
401893=V220
401894=V110
524767
620562
405538
400078
400847
400847
405595
517206
401365
400884
700273
406267=V220
406268=V110

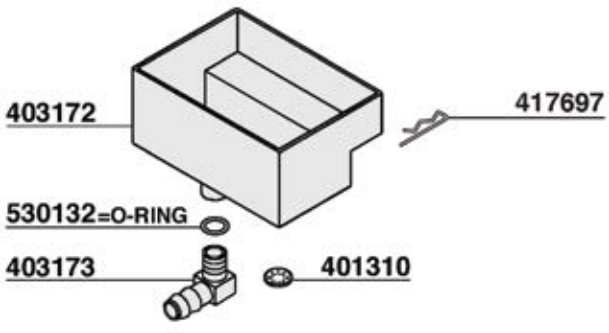
403172
417697
530132=O-RING
403173
401310

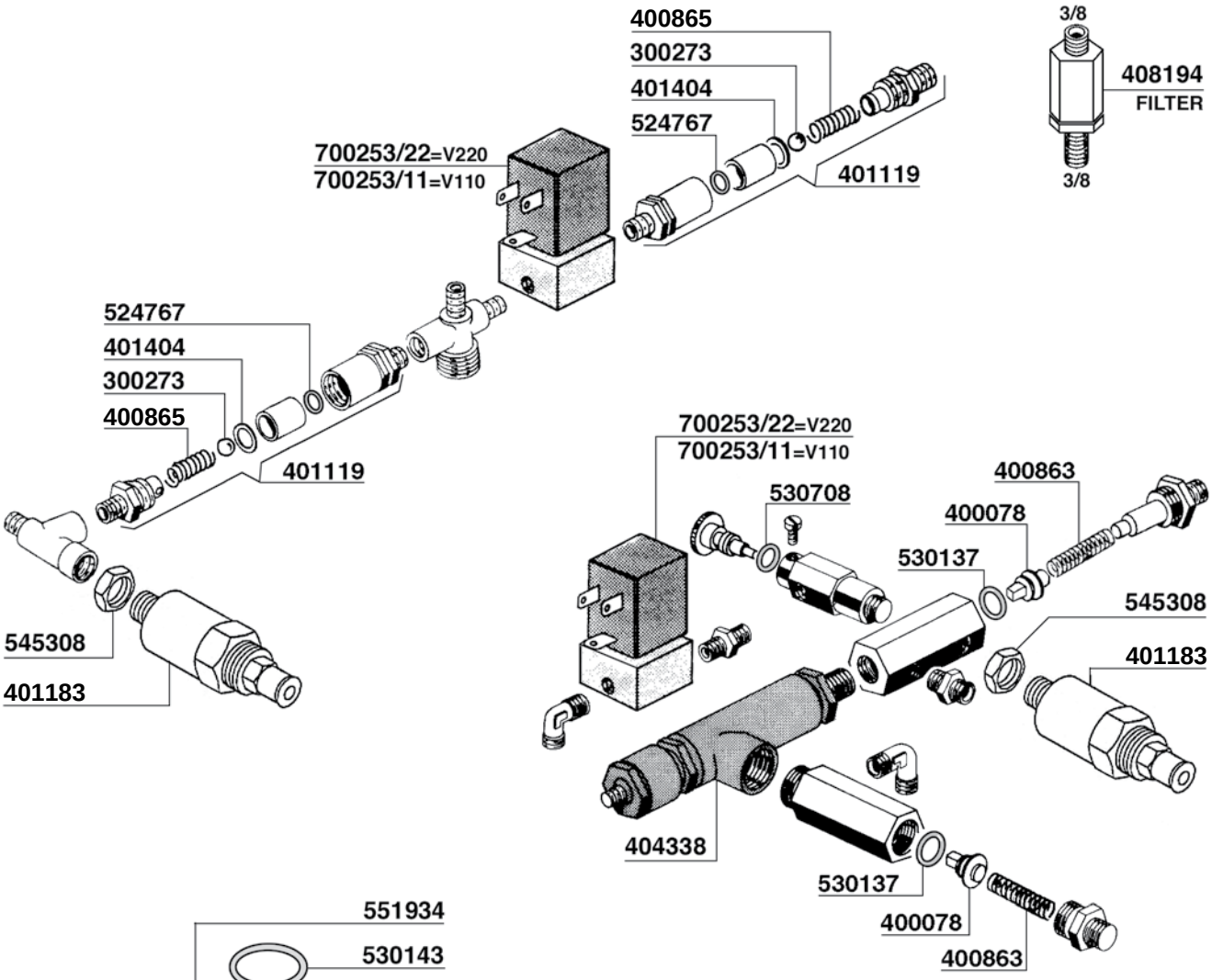
400865
300273
401404
524767
401119
700253/22=V220
700253/11=V110
3/8
408194
FILTER
3/8
524767
401404
300273
400865
401119
545308
401183
700253/22=V220
700253/11=V110
530708
400863
400078
530137
545308
401183
404338
530137
400078
400863

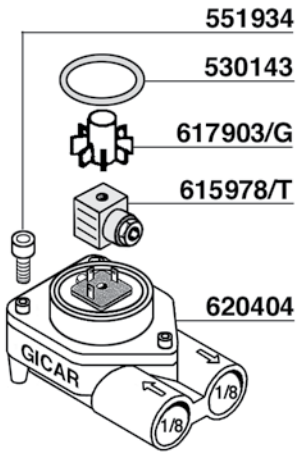
551934
530143
617903/G
615978/T
620404
GICAR
1/8
1/8

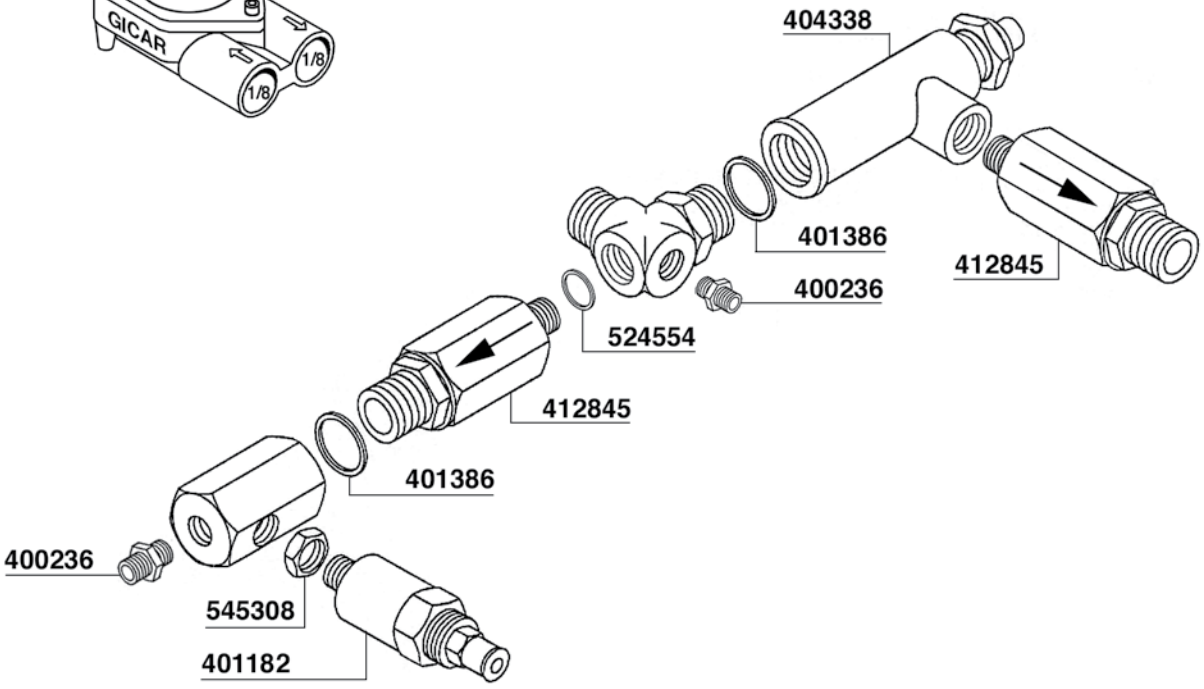
404338
401386
412845
400236
524554
412845
401386
400236
545308
401182

400821

142x128x4

400821/T
TEFLON

529575/30

400819
400819/T=TEFLON

410917

1/4 RAME -COPPER

406440
cm. 150

400614 = GR1 220V 1800W mm.170
400620 = GR1 110V 1800W mm.170
400615 = GR2 220V 3000W mm.330
400621 = GR2 110V 3000W mm.330
401834 = GR2 220V 3500W mm.340
404580 = GR2 220/380V 4500W mm.335
400616 = GR3 220V 4000W mm.455
400616/38 = GR3 400V 4000W mm.455
400617 = GR3/4 220V 5000W mm.455

BOILER
108x101x2
TEFLON

404392

MYTHOS

413838

400826/T
TEFLON

400613 = 1,25" 2000W 220V mm.170
400619 = AMERICA 110V 1800W mm.155

AMERICA - MAXI AMERICA

616597 CE/UL

402286 1"1/4 230V
1700w 140mm

400628 = SUPER-MAXI 110V 2500W mm.210
400627 = SUPER-MAXI 220V 2400W mm.210

401911 220V 1350W 135 mm
401912 110V 1350W 135 mm

401378
401378/T TEFLON

CAPPUCCINO

406555
PORTOFINO

400737
BAR-CENTURY

415960
CROME
ROMA

401880
GOLD
BELLE EPOQUE

615624/A
certificato
certified

700217

524555

618970

401833

415960
OPUS

417566

417567

700464

PLASTIC

408229

700750/V

618968

524554

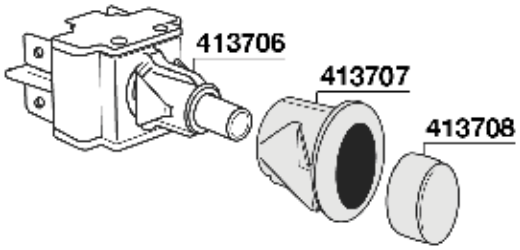
413706
413707
413708

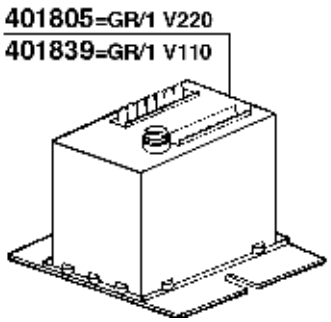
401805=GR/1 V220
401839=GR/1 V110

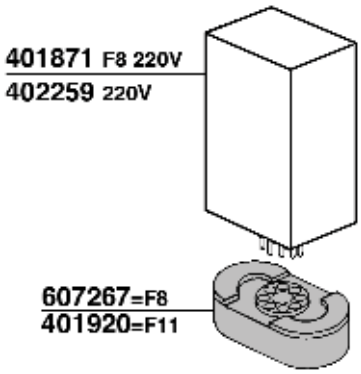
401871 F8 220V
402259 220V
607267=F8
401920=F11

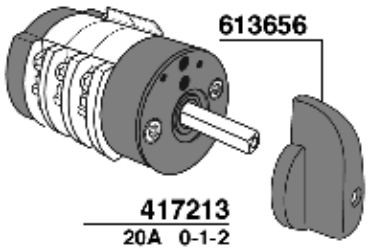
613656
417213
20A 0-1-2

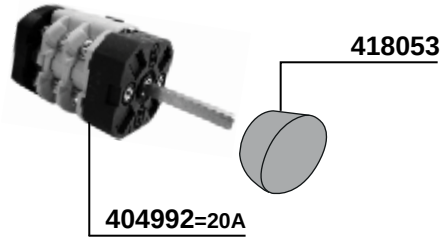
418053
404992=20A

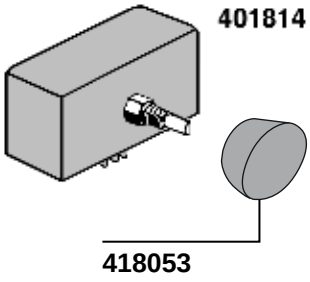
401814
418053

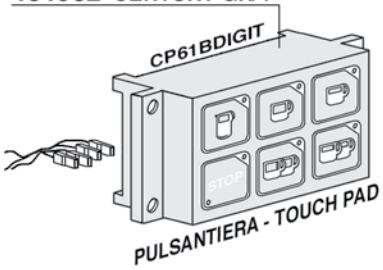
404962=CENTURY GR/1
CP61BDIGIT
STOP
PULSANTIERA - TOUCH PAD

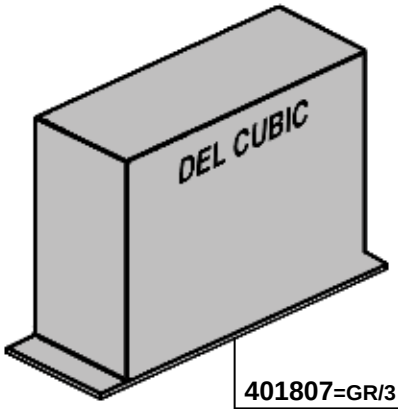
DEL CUBIC
401807=GR/3 V220
401841=GR/3 V110

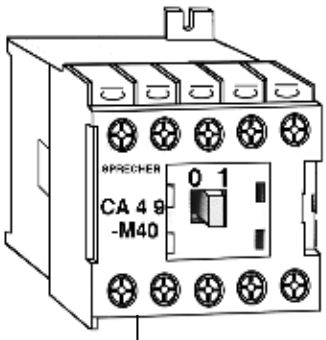
SPRECHER
0 1
CA 4 9
-M40
700653/22

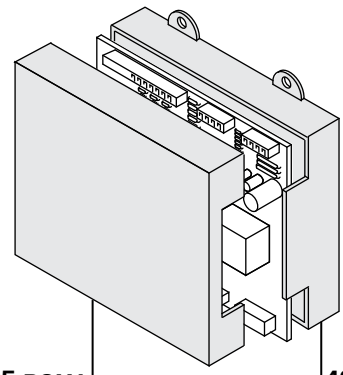
416035 ROMA
9.5.22.58 G00
GICAR CODE
423376 AGILE
9.5.25.69 G00
GICAR CODE

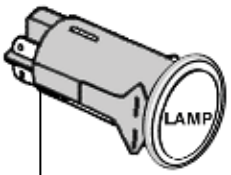
LAMP
401975=INTERRUTTORE
SWITCH BIP.

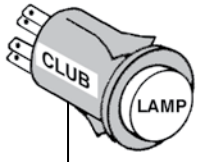
CLUB
LAMP
400660 V230 BIP.
PULSANTE
PUSH BOTTON

405475=CAPPUCC.CY XP61 V220

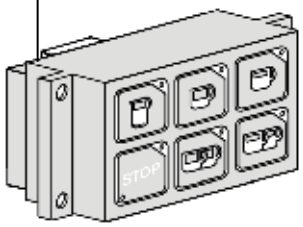

PULSANTIERA+CENTRALINA
TOUCH PAD+ELECTRONIC BOX

406556=XP65 GR/1 V220

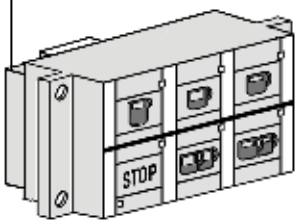

PULSANTIERA+CENTRALINA
TOUCH PAD+ELECTRONIC BOX

408494=PORTOFINO V220
CENTURY V220 96'
408711=PORTOFINO V110
CENTURY V110 96'

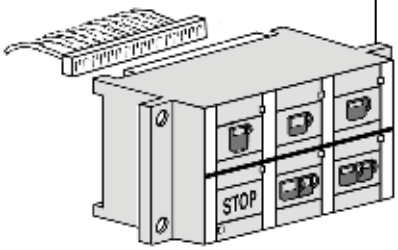

PULSANTIERA+CENTRALINA
TOUCH PAD+ELECTRONIC BOX

413426=105 - 205
CENTURY 02'
PORTOFINO

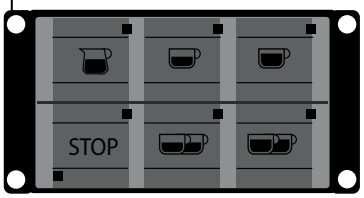

PULSANTIERA - TOUCH PAD

413123

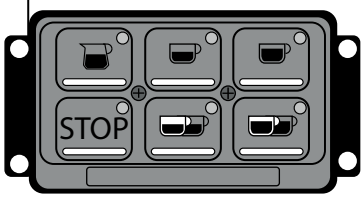

RESTYLING MODEL

417578 ROMA
GICAR CODE 9.9.07.26G

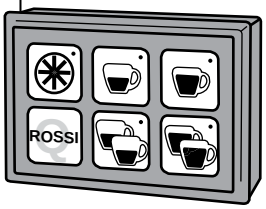

418748=OPUS 14 PIN
420250=SUBLIMA 16 PIN

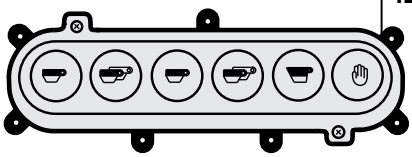

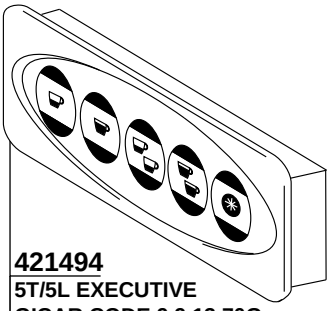

421494
5T/5L EXECUTIVE
GICAR CODE 9.9.13.70G

422706
FRESCOBALDI-MAJOR 5T/5L
GICAR CODE 9.9.14.83G

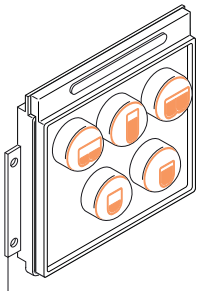

414484
EXCELSIOR



419424
BLU AGILE H20
GICAR CODE 9.9.13.21G

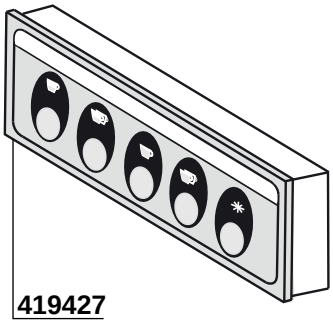

419427
BLU AGILE / CADETTA 5T/5L
GICAR CODE 9.9.13.22G

413420=GR2 V220	**01.14.0077**
413421=GR3 V220	**01.14.0079**
413422=GR4 V220	**01.14.0076**
413423=GR2 V240	**01.14.0085**
413425=GR3 V240	**01.14.0083**

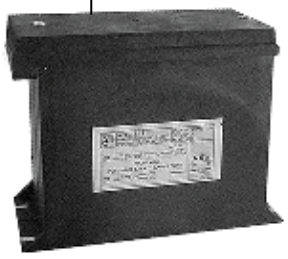

RESTYLING MODEL

409950=GR/2V220
409952=GR/3V220
409953=GR/4V220

A=POMPA AUTOL.
B=DOSATURA H2O
C=GRUPPO 1
D=GRUPPO 2
E=GRUPPO 3
F=GRUPPO 4

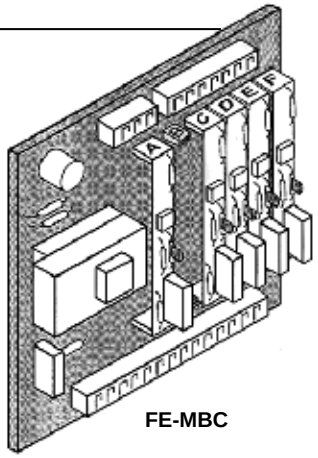

FE-MBC

410141 **FLAT CABLE GR/2 DIGIT BAR**

410142 **FLAT CABLE GR/3 DIGIT BAR**

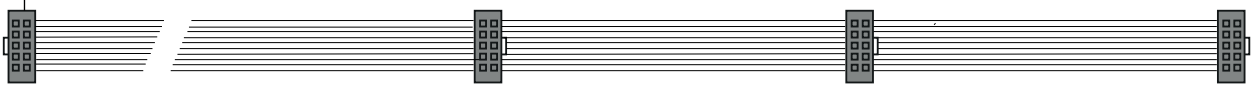

418306 **230V**
CENTRALINA PER
DISPLAY HW
01.14.0179

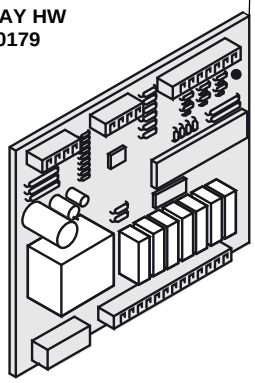

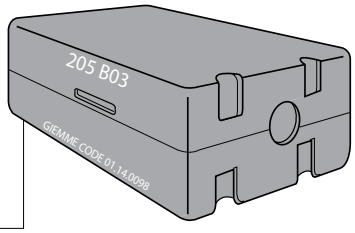

414133
CENTR.PER DISPLAY
230V PROFESSIONAL
01.14.0098

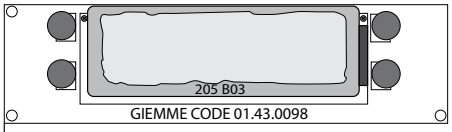

414134
DISPLAY C/TASTI
PROGRAMMAZ. PROFESSIONAL
01.43.0098

417836 **230V**
CENTRALINA 3
GR OPUS
01.14.0162

415954 **230V**
CENTRALINA 2/3
GR EXELCIOR
01.14.0138

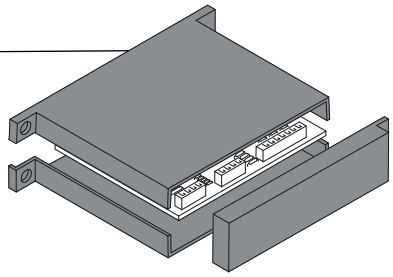

424069
SUBLIMA 230V

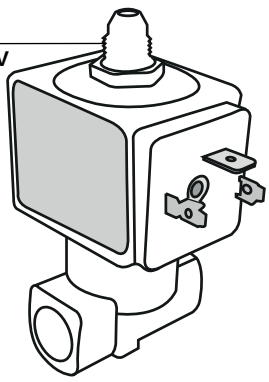

410438
1°MODEL F/F

411738
2°MODEL M/M

411739
3°MODEL M/F

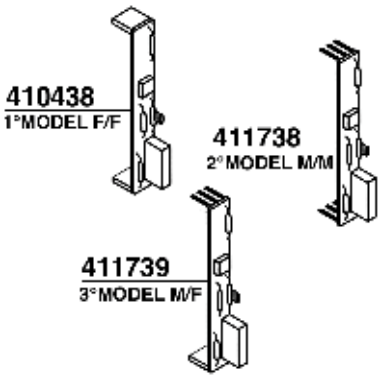

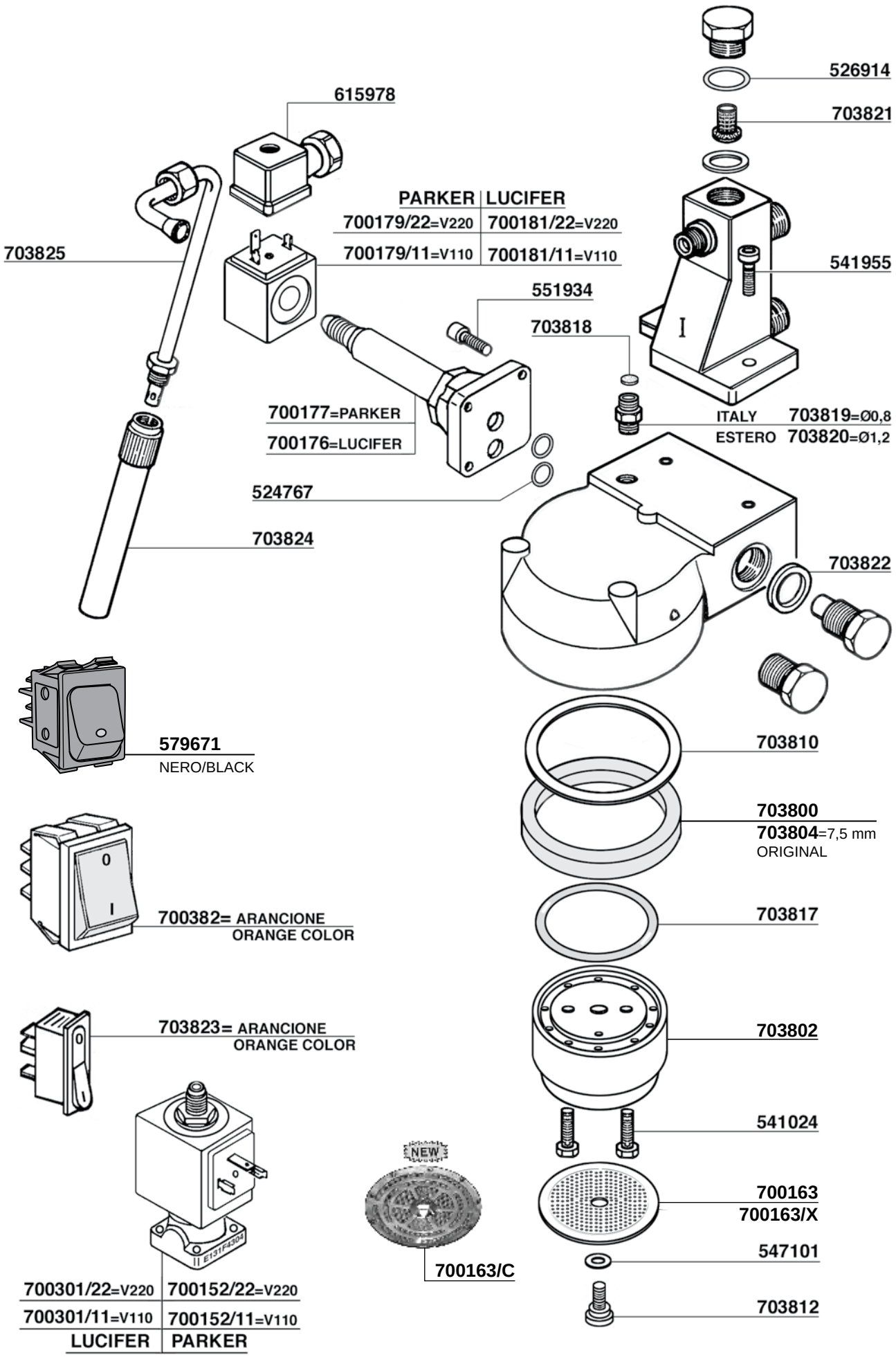
526914
703821
615978
PARKER | LUCIFER
700179/22=V220 | 700181/22=V220
700179/11=V110 | 700181/11=V110
703825
541955
551934
703818
700177=PARKER
700176=LUCIFER
ITALY 703819=Ø0,8
ESTERO 703820=Ø1,2
524767
703824
703822
579671
NERO/BLACK
703810
703800
703804=7,5 mm
ORIGINAL
700382= ARANCIONE
ORANGE COLOR
703817
703823= ARANCIONE
ORANGE COLOR
703802
541024
NEW
700163
700163/X
700163/C
547101
703812
700301/22=V220 | 700152/22=V220
700301/11=V110 | 700152/11=V110
LUCIFER | PARKER

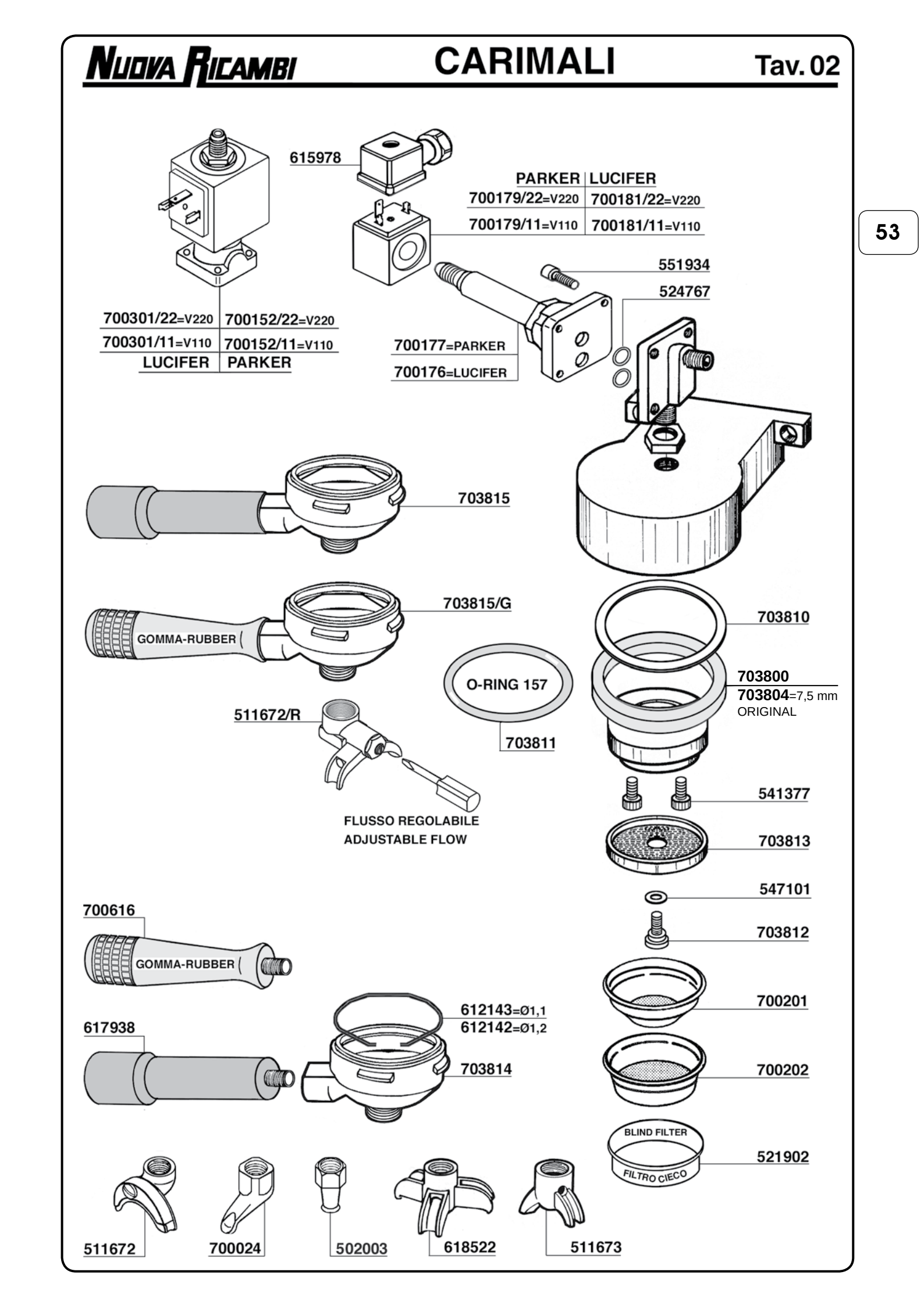
615978
PARKER | LUCIFER
700179/22=V220 | 700181/22=V220
700179/11=V110 | 700181/11=V110
551934
524767
700301/22=V220 | 700152/22=V220
700301/11=V110 | 700152/11=V110
LUCIFER | PARKER
700177=PARKER
700176=LUCIFER
703815
703815/G
GOMMA-RUBBER
703810
703800
703804=7,5 mm
ORIGINAL
O-RING 157
703811
511672/R
FLUSSO REGOLABILE
ADJUSTABLE FLOW
541377
703813
547101
703812
700616
GOMMA-RUBBER
700201
612143=Ø1,1
612142=Ø1,2
617938
703814
700202
BLIND FILTER
FILTRO CIECO
521902
511672
700024
502003
618522
511673

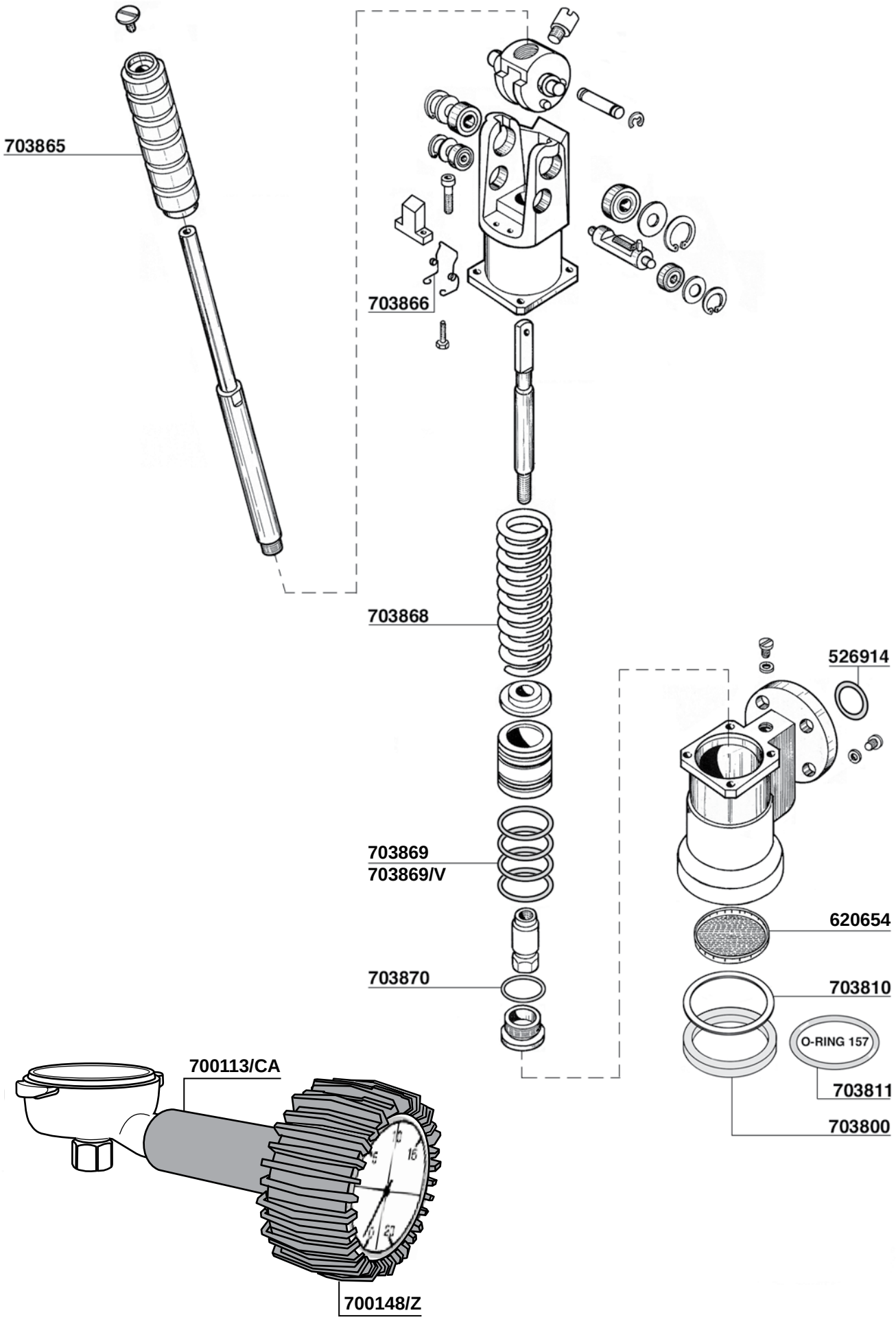
703865
703866
703868
703869
703869/V
703870
526914
620654
703810
O-RING 157
703811
703800
700113/CA
700148/Z

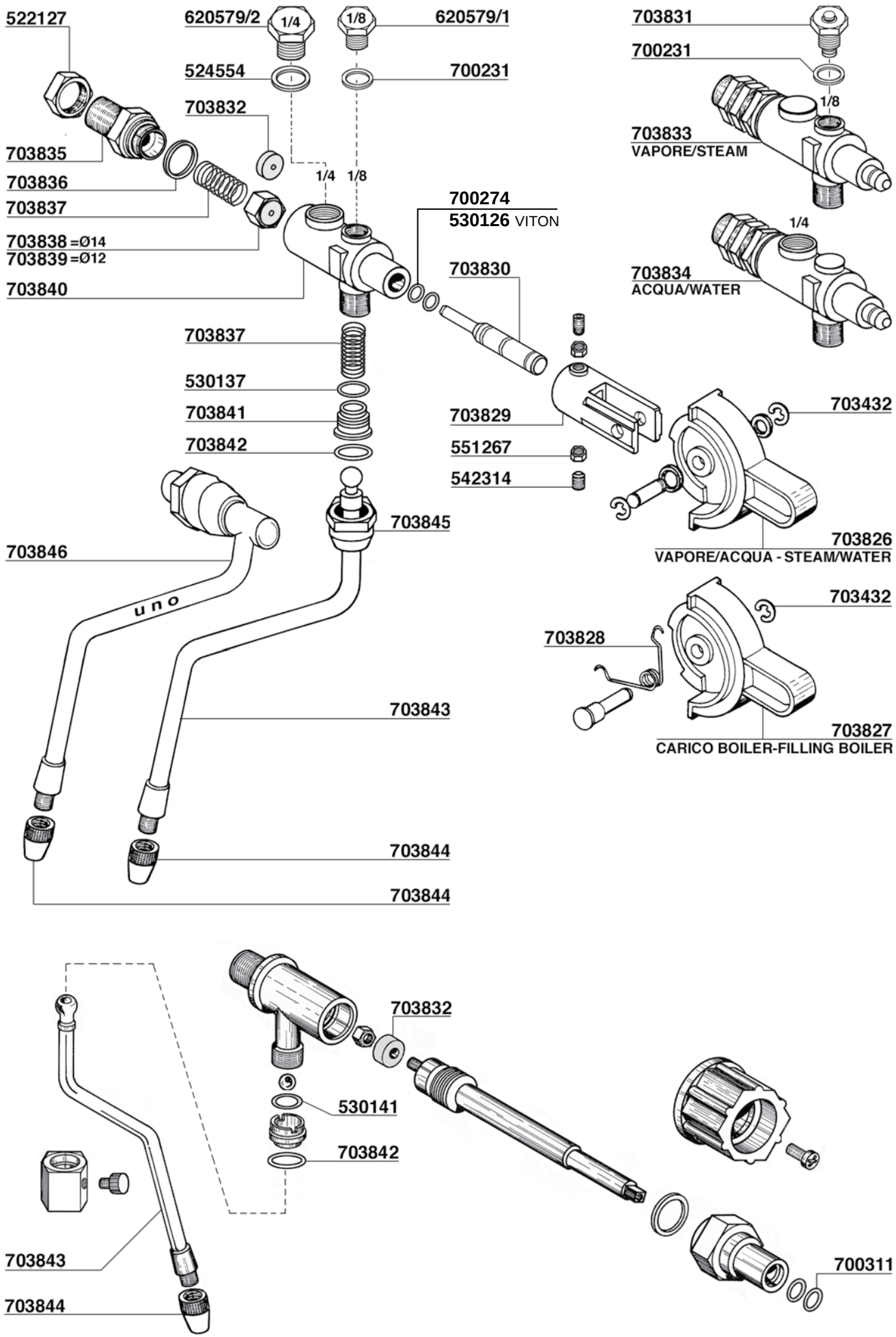
522127
620579/2
1/4
1/8
620579/1
524554
700231
703832
703835
703836
703837
703838 =Ø14
703839 =Ø12
703840
1/4
1/8
700274
530126 VITON
703830
703837
530137
703841
703842
703829
551267
542314
703845
703846
uno
703843
703844
703844
703831
700231
1/8
703833
VAPORE/STEAM
1/4
703834
ACQUA/WATER
703432
703826
VAPORE/ACQUA - STEAM/WATER
703432
703828
703827
CARICO BOILER-FILLING BOILER
703832
530141
703842
703843
703844
700311

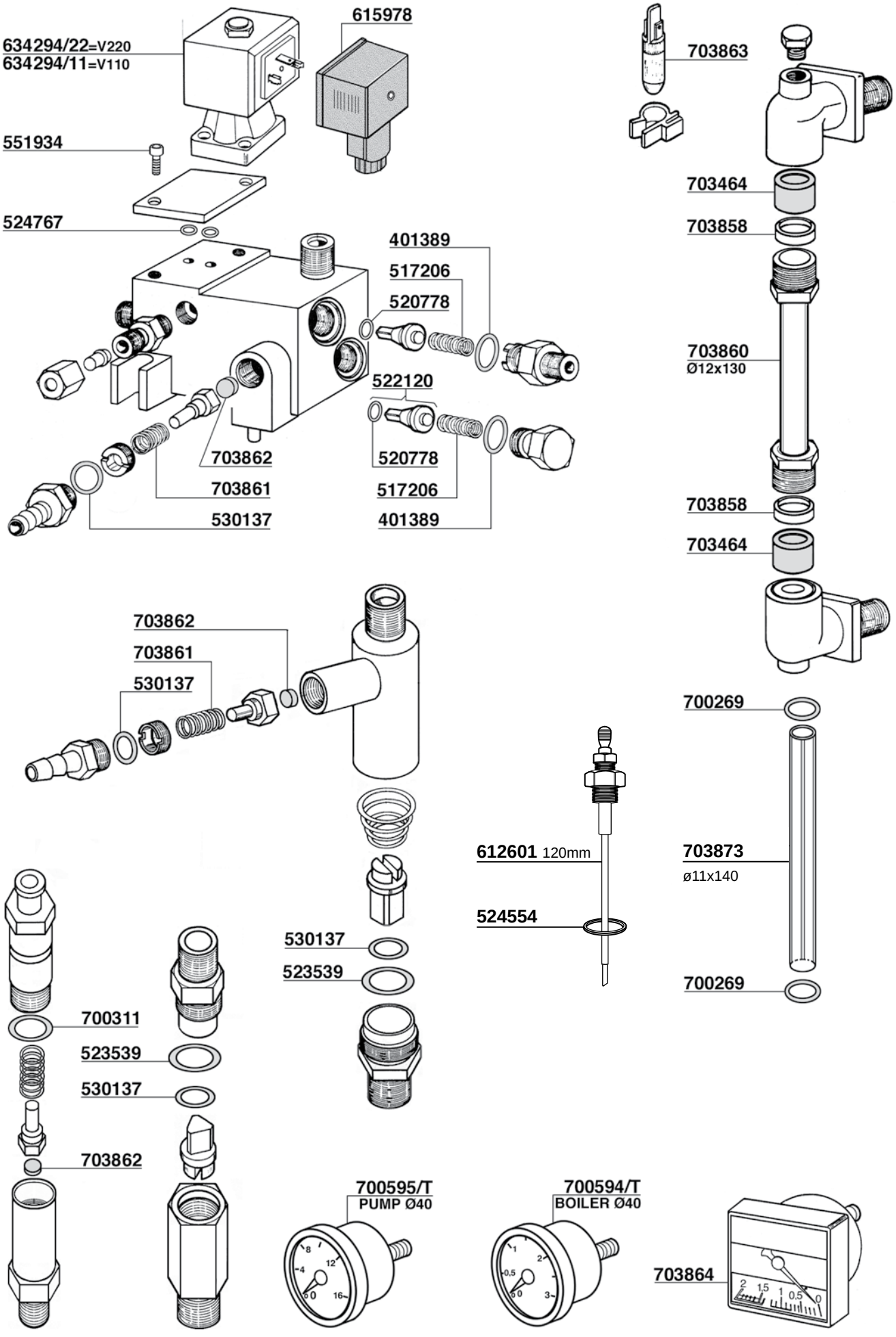
634294/22=V220
634294/11=V110
615978
551934
524767
401389
517206
520778
522120
703862
703861
530137
520778
517206
401389
703863
703464
703858
703860
Ø12x130
703858
703464
703862
703861
530137
700269
612601 120mm
524554
703873
ø11x140
700269
530137
523539
700311
523539
530137
703862
700595/T
PUMP Ø40
700594/T
BOILER Ø40
703864

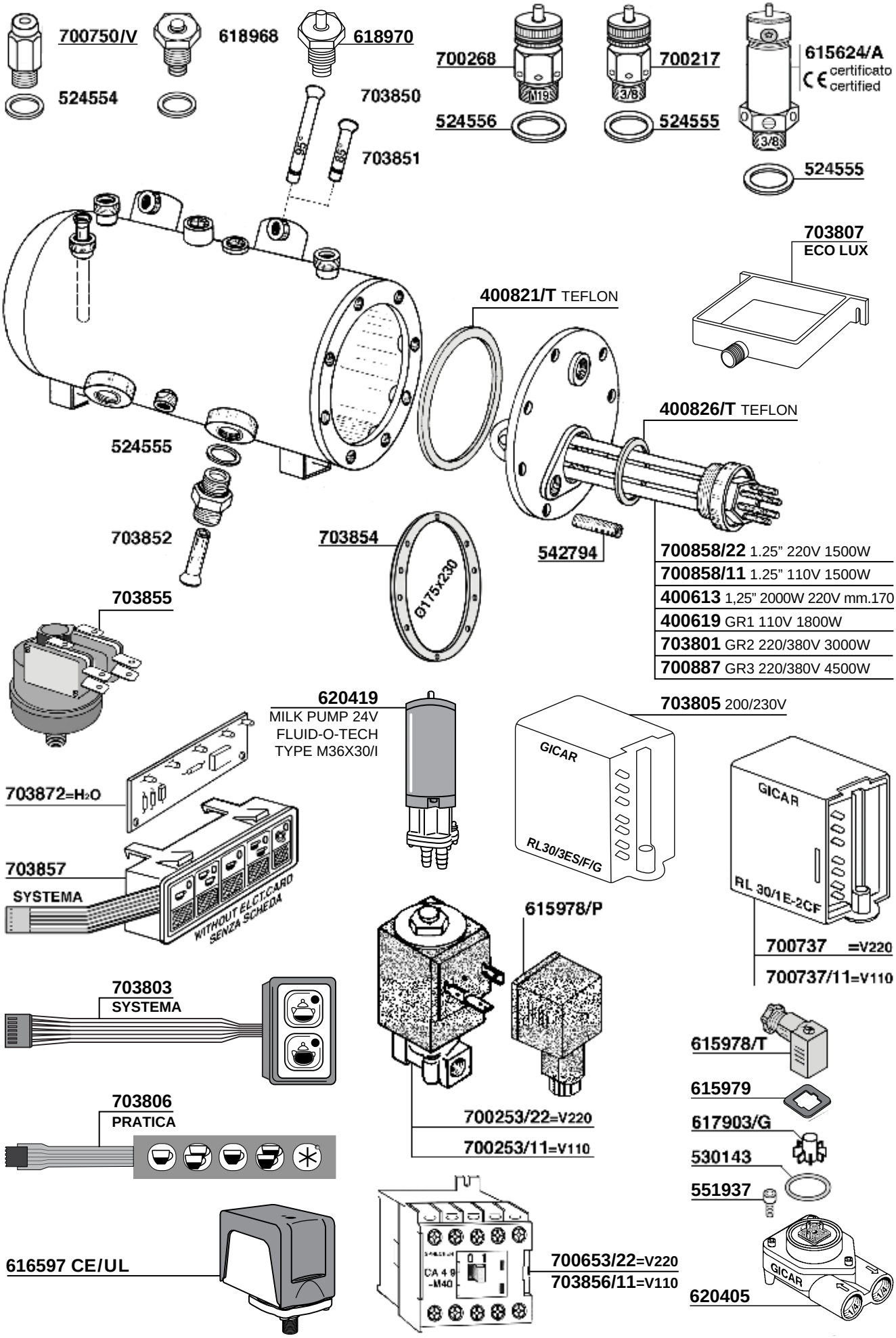
700750/V
618968
618970
524554
703850
703851
700268
M19
524556
700217
3/8
524555
615624/A
CE certificato certified
3/8
524555
703807
ECO LUX
400821/T TEFLON
400826/T TEFLON
524555
703852
703854
Ø175x230
542794
700858/22 1.25" 220V 1500W
700858/11 1.25" 110V 1500W
400613 1,25" 2000W 220V mm.170
400619 GR1 110V 1800W
703801 GR2 220/380V 3000W
700887 GR3 220/380V 4500W
703855
620419
MILK PUMP 24V
FLUID-O-TECH
TYPE M36X30/I
703805 200/230V
GICAR
RL30/3ES/FIG
GICAR
RL 30/1E-2CF
703872=H2O
703857
SYSTEMA
WITHOUT ELCT.CARD
SENZA SCHEDA
615978/P
700737 =V220
700737/11=V110
703803
SYSTEMA
615978/T
615979
617903/G
530143
551937
703806
PRATICA
700253/22=V220
700253/11=V110
616597 CE/UL
CA 4 9
-M40
700653/22=V220
703856/11=V110
GICAR
620405

DIECI A/S - UNDICI A/S - DODICI A/S QUINDICI A/S

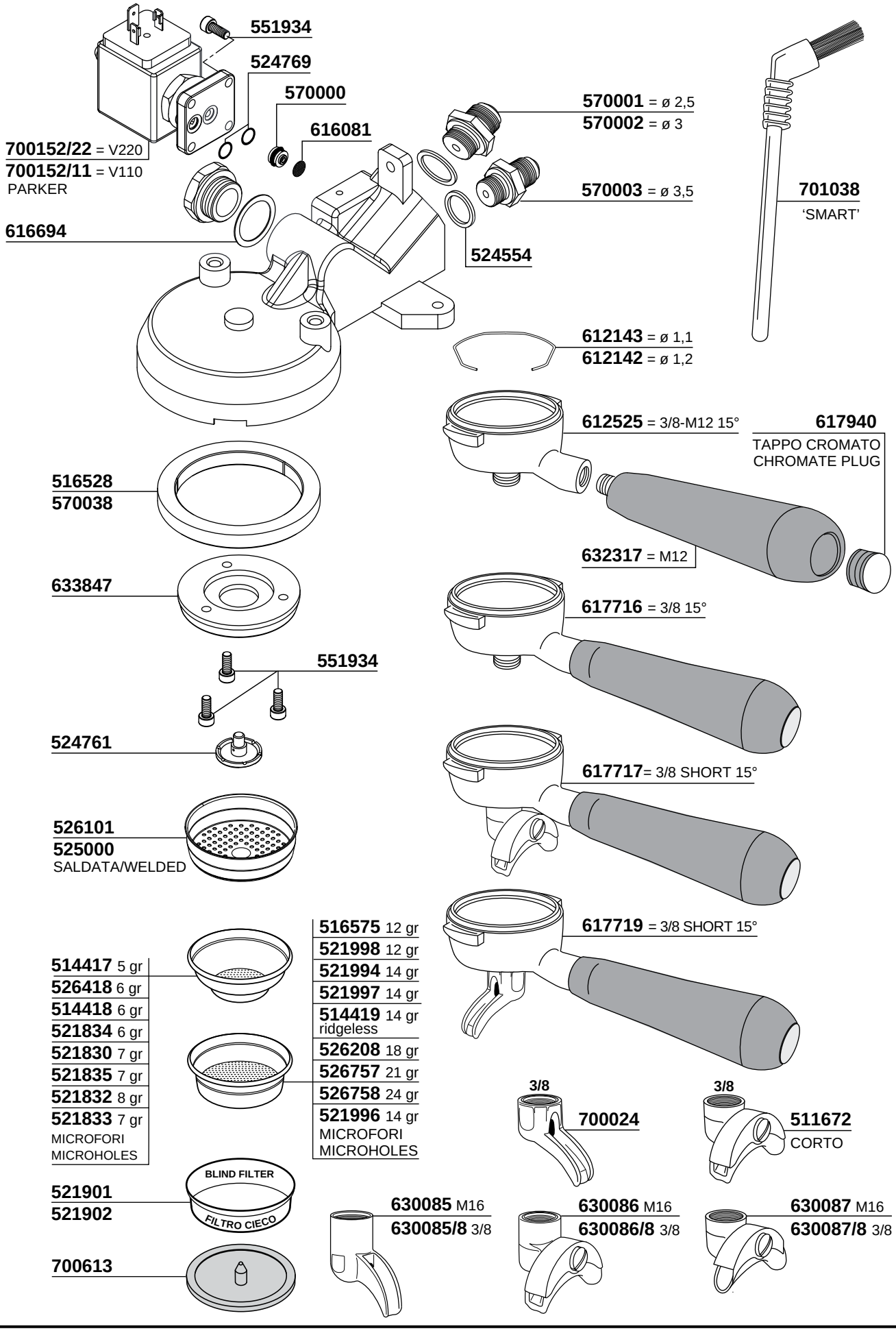

VENTI

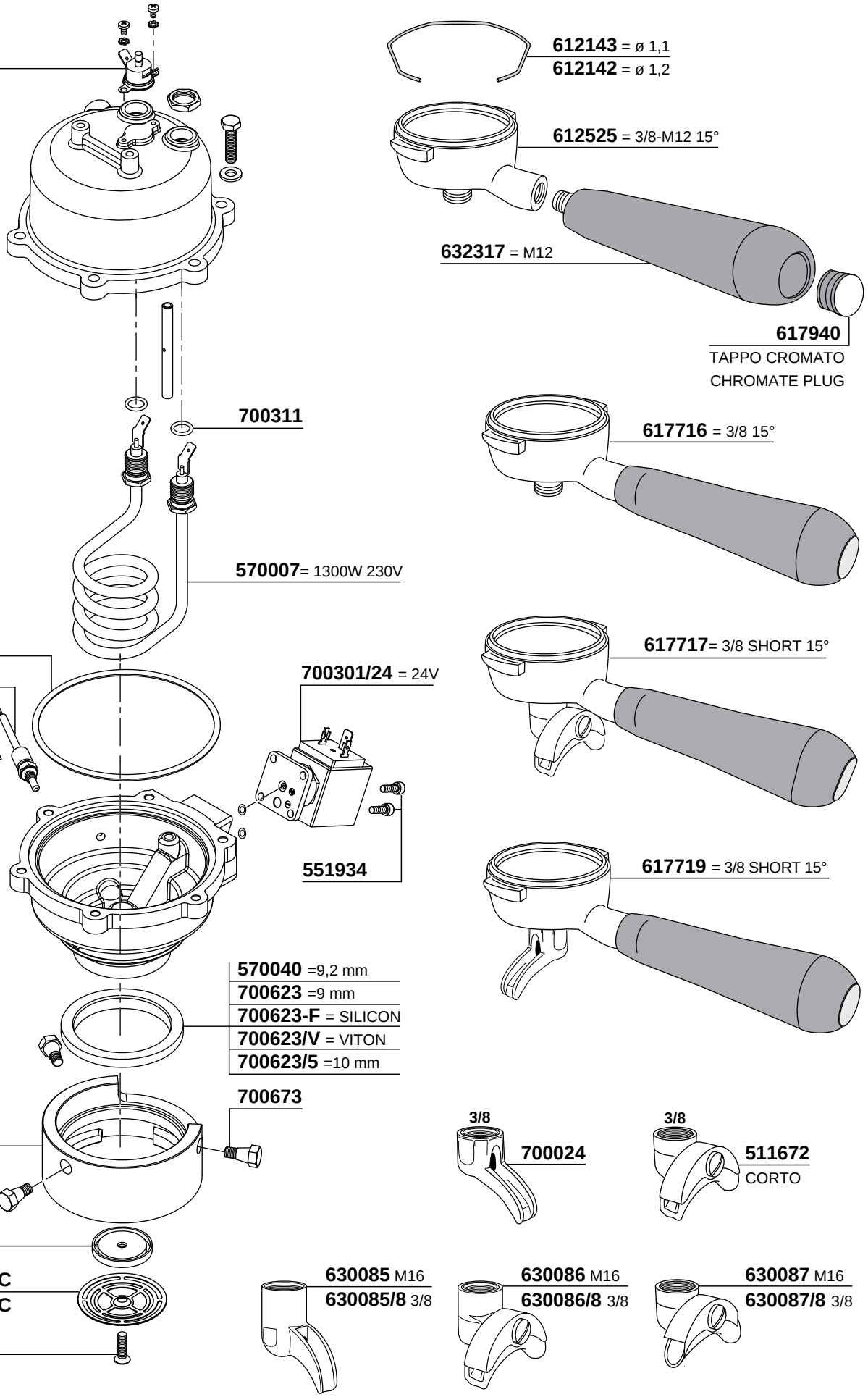
701812
612143 = ø 1,1
612142 = ø 1,2
612525 = 3/8-M12 15°
632317 = M12
617940
TAPPO CROMATO
CHROMATE PLUG
700311
617716 = 3/8 15°
570007= 1300W 230V
570004
570005
620562
570006
700301/24 = 24V
617717= 3/8 SHORT 15°
551934
617719 = 3/8 SHORT 15°
570040 =9,2 mm
700623 =9 mm
700623-F = SILICON
700623/V = VITON
700623/5 =10 mm
700673
700641
3/8
700024
3/8
511672
CORTO
700646
700163/C
526163/C
700625
630085 M16
630085/8 3/8
630086 M16
630086/8 3/8
630087 M16
630087/8 3/8

DIECI A/S - UNDICI A/S - DODICI A/S QUINDICI A/S - VENTI

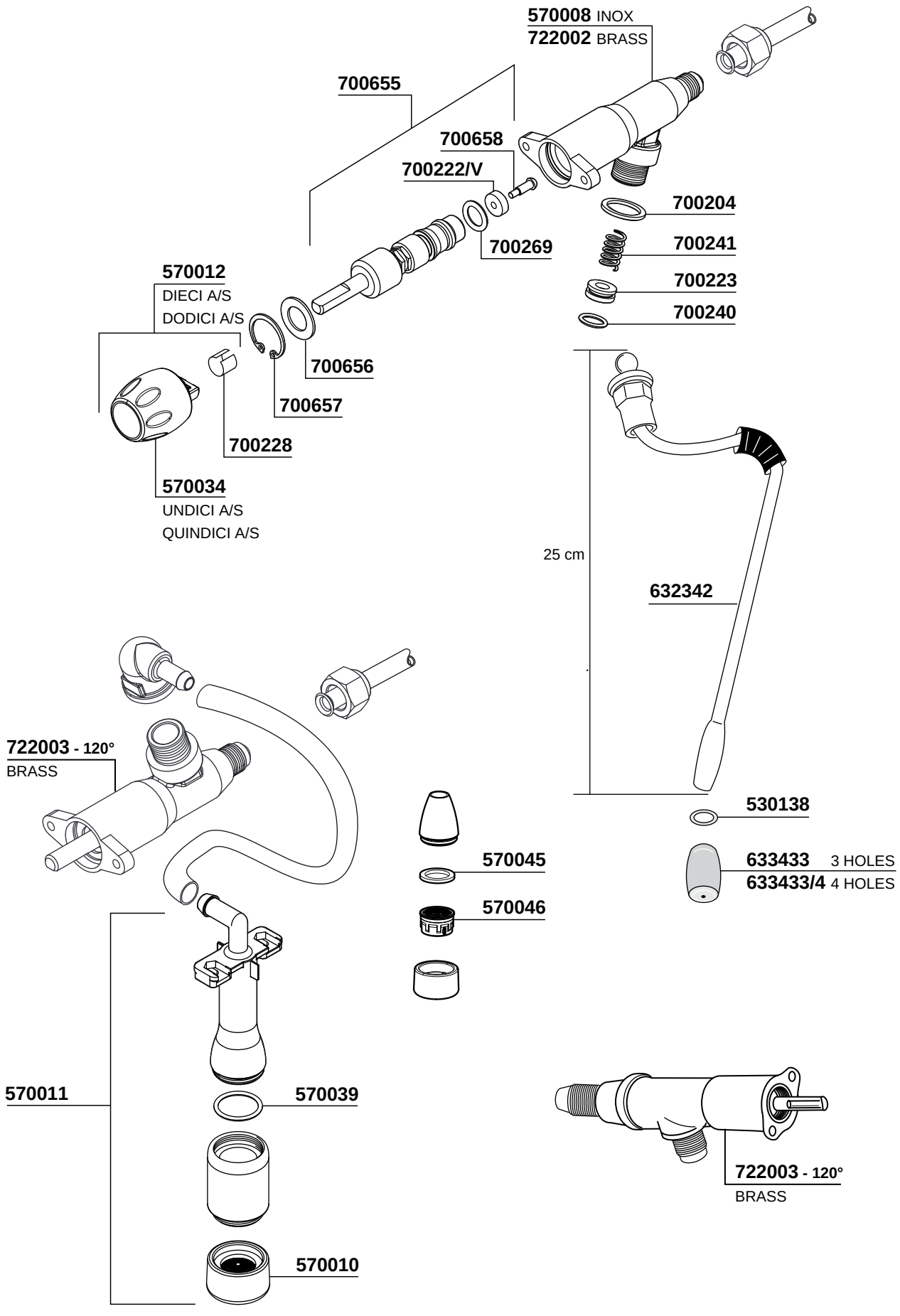

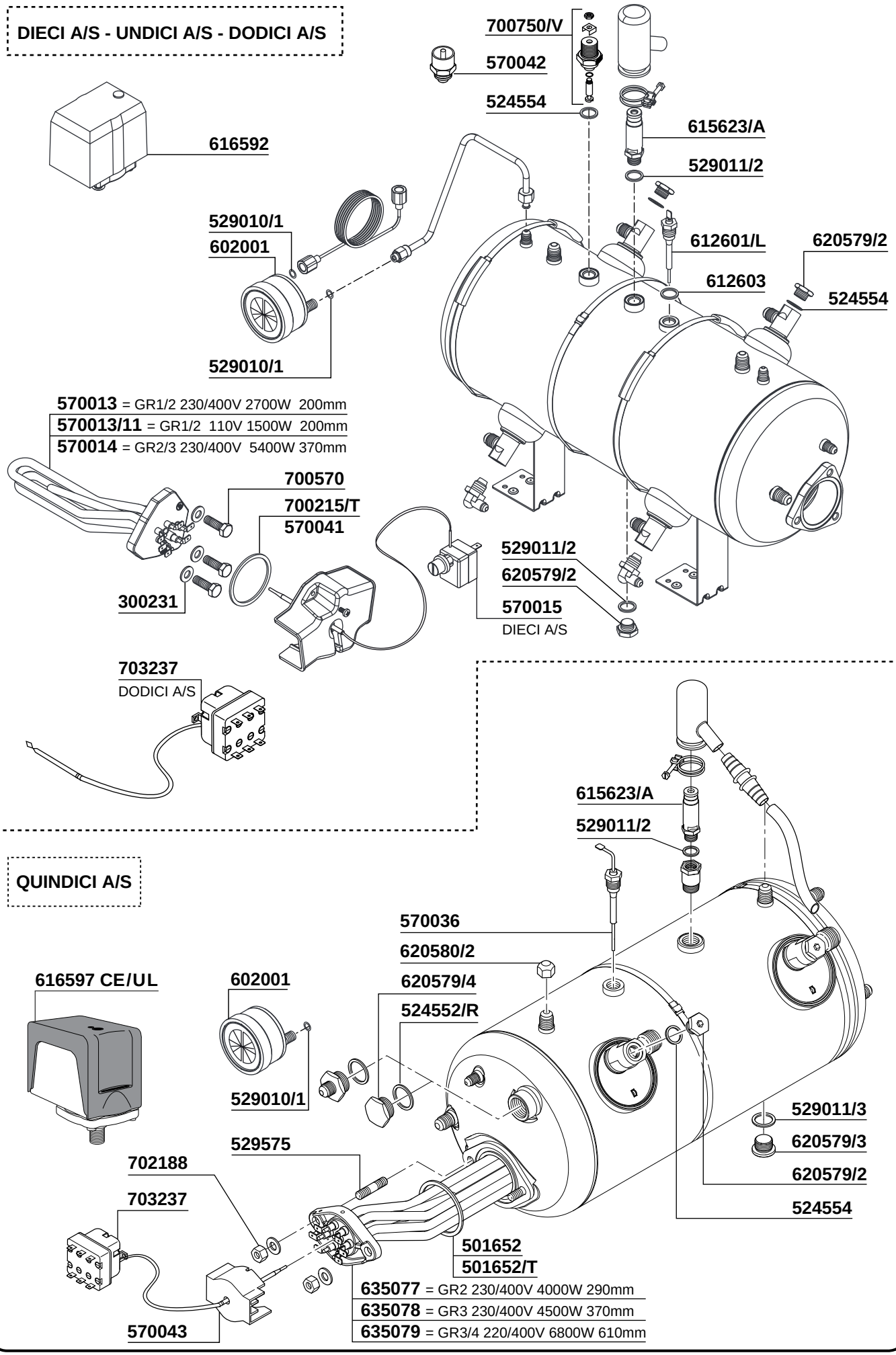
DIECI A/S - UNDICI A/S - DODICI A/S
700750/V
570042
524554
615623/A
529011/2
616592
529010/1
602001
612601/L
620579/2
612603
524554
529010/1
570013 = GR1/2 230/400V 2700W 200mm
570013/11 = GR1/2 110V 1500W 200mm
570014 = GR2/3 230/400V 5400W 370mm
700570
700215/T
570041
529011/2
620579/2
300231
570015
DIECI A/S
703237
DODICI A/S
615623/A
529011/2
QUINDICI A/S
570036
620580/2
616597 CE/UL
602001
620579/4
524552/R
529010/1
529011/3
620579/3
529575
620579/2
702188
703237
524554
501652
501652/T
635077 = GR2 230/400V 4000W 290mm
635078 = GR3 230/400V 4500W 370mm
635079 = GR3/4 220/400V 6800W 610mm
570043

VENTI

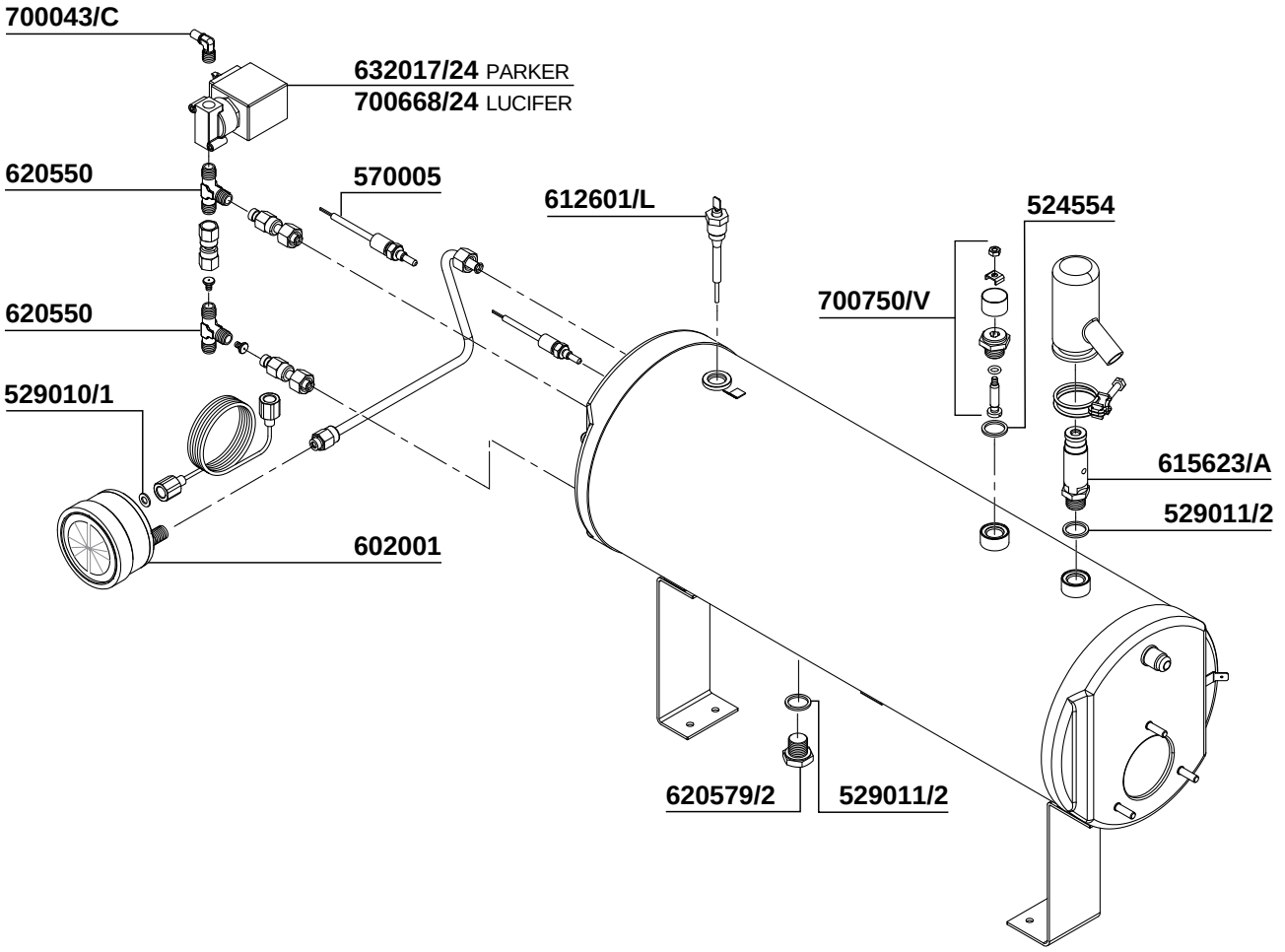
700043/C
632017/24 PARKER
700668/24 LUCIFER
620550
570005
612601/L
524554
700750/V
620550
529010/1
615623/A
529011/2
602001
620579/2
529011/2

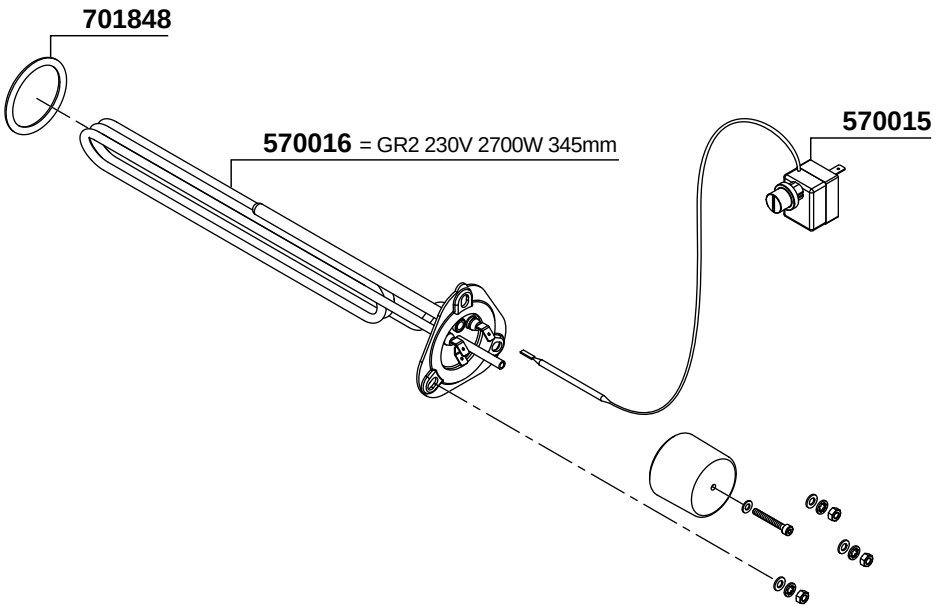
701848
570016 = GR2 230V 2700W 345mm
570015

DIECI A/S - UNDICI A/S - DODICI A/S
QUINDICI A/S - VENTI

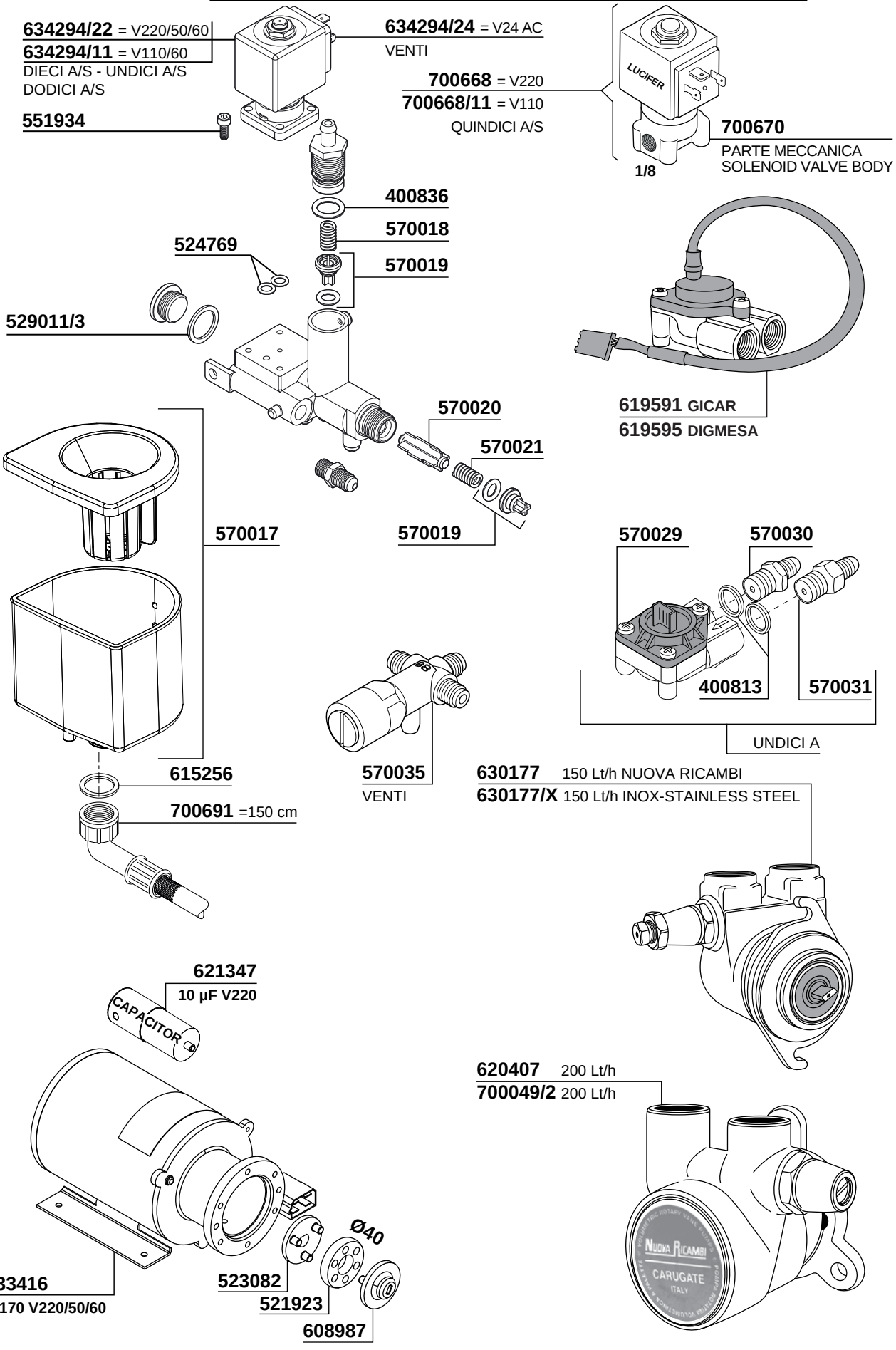

DIECI A/S - UNDICI A/S - DODICI A/S QUINDICI A/S - VENTI

570022

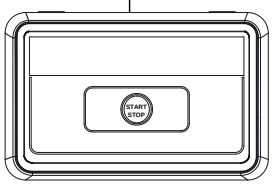

DIECI S

570023

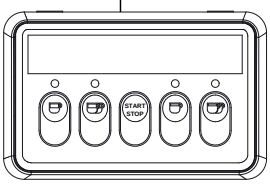

DIECI A

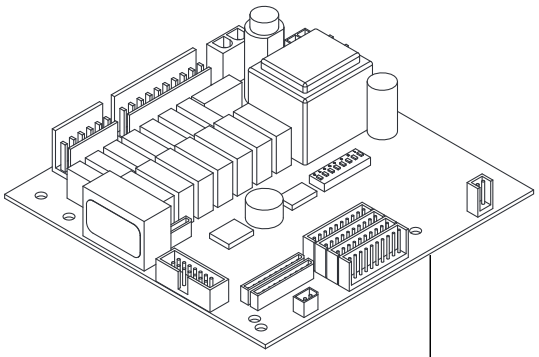

570024 DIECI A/S - UNDICI A/S
DODICI A/S - QUINDICI A/S

570025

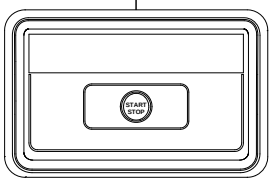

DODICI S

570026

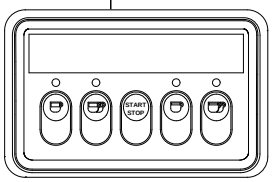

DODICI A

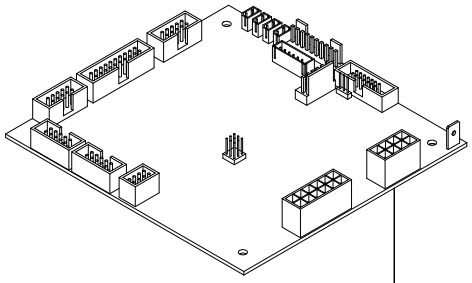

570028 VENTI

570027

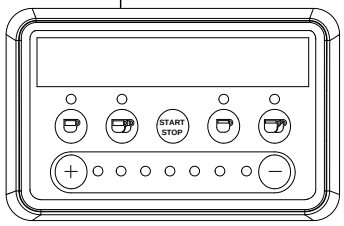

VENTI

619006
QUINDICI S

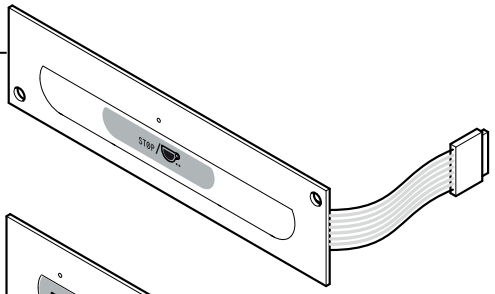

570032
UNDICI A

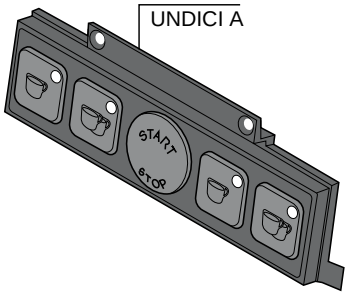

570033
UNDICI S

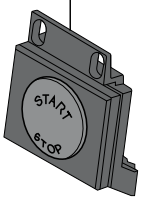

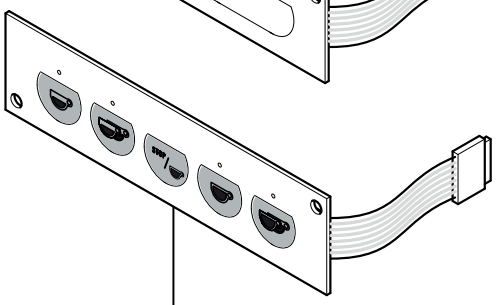

570037
QUINDICI A

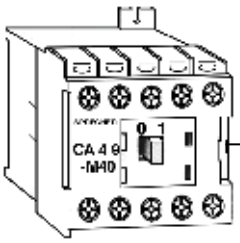

700653/22=V220
DIECI A/S - UNDICI A/S - VENTI

700238
DODICI A/S - QUINDICI A/S

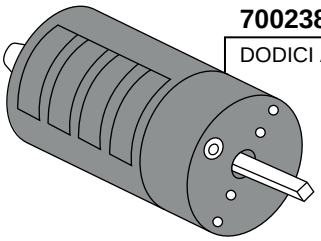

570044

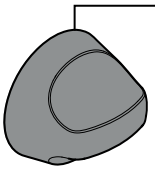

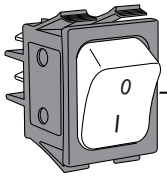

700429/V
DIECI A/S - UNDICI A/S - VENTI

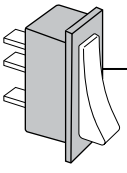

703823
DODICI A/S - QUINDICI A/S

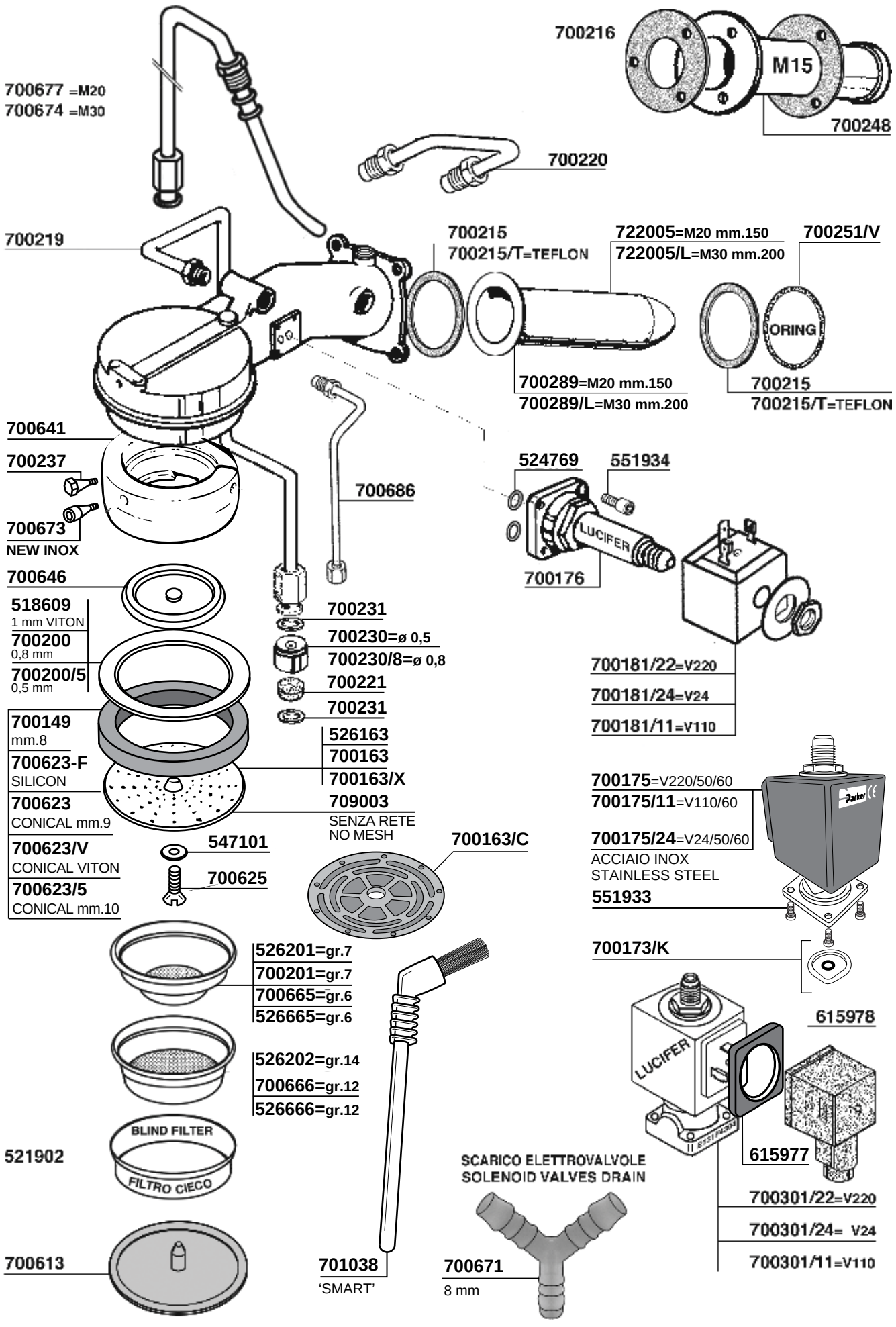
700677 =M20
700674 =M30
700216
M15
700248
700220
700219
700215
700215/T=TEFLON
722005=M20 mm.150
722005/L=M30 mm.200
700251/V
ORING
700289=M20 mm.150
700289/L=M30 mm.200
700215
700215/T=TEFLON
700641
700237
700673
NEW INOX
700686
524769
551934
LUCIFER
700176
700646
518609
1 mm VITON
700200
0,8 mm
700200/5
0,5 mm
700231
700230=ø 0,5
700230/8=ø 0,8
700221
700231
700181/22=V220
700181/24=V24
700181/11=V110
700149
mm.8
700623-F
SILICON
700623
CONICAL mm.9
700623/V
CONICAL VITON
700623/5
CONICAL mm.10
526163
700163
700163/X
709003
SENZA RETE
NO MESH
547101
700625
700163/C
700175=V220/50/60
700175/11=V110/60
700175/24=V24/50/60
ACCIAIO INOX
STAINLESS STEEL
551933
700173/K
526201=gr.7
700201=gr.7
700665=gr.6
526665=gr.6
526202=gr.14
700666=gr.12
526666=gr.12
615978
LUCIFER
615977
BLIND FILTER
FILTRO CIECO
521902
SCARICO ELETTROVALVOLE
SOLENOID VALVES DRAIN
700301/22=V220
700301/24= V24
700301/11=V110
700613
701038
'SMART'
700671
8 mm

NUOVA RICAMBI PARTI COMPATIBILI CIMBALI Tav. 02

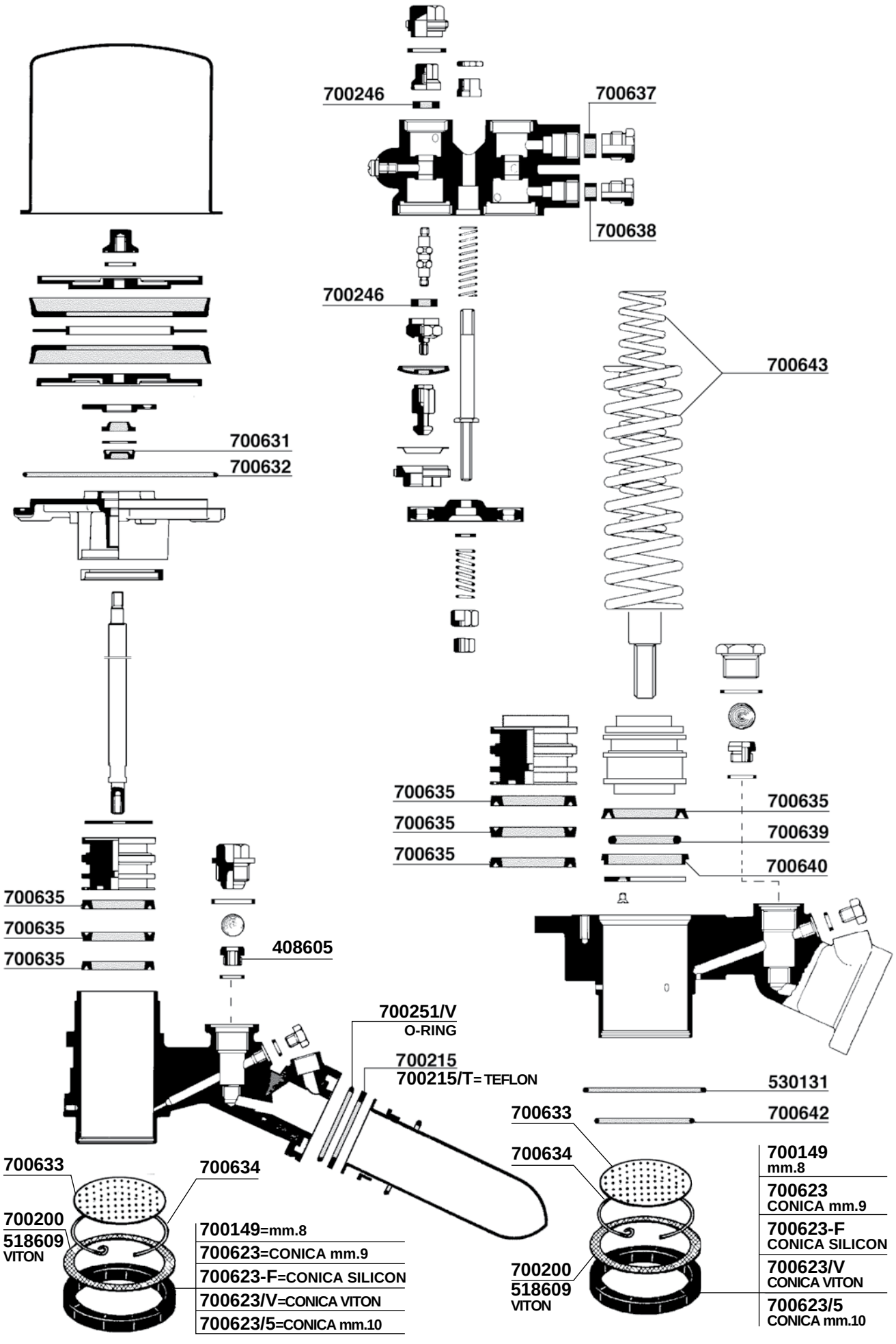

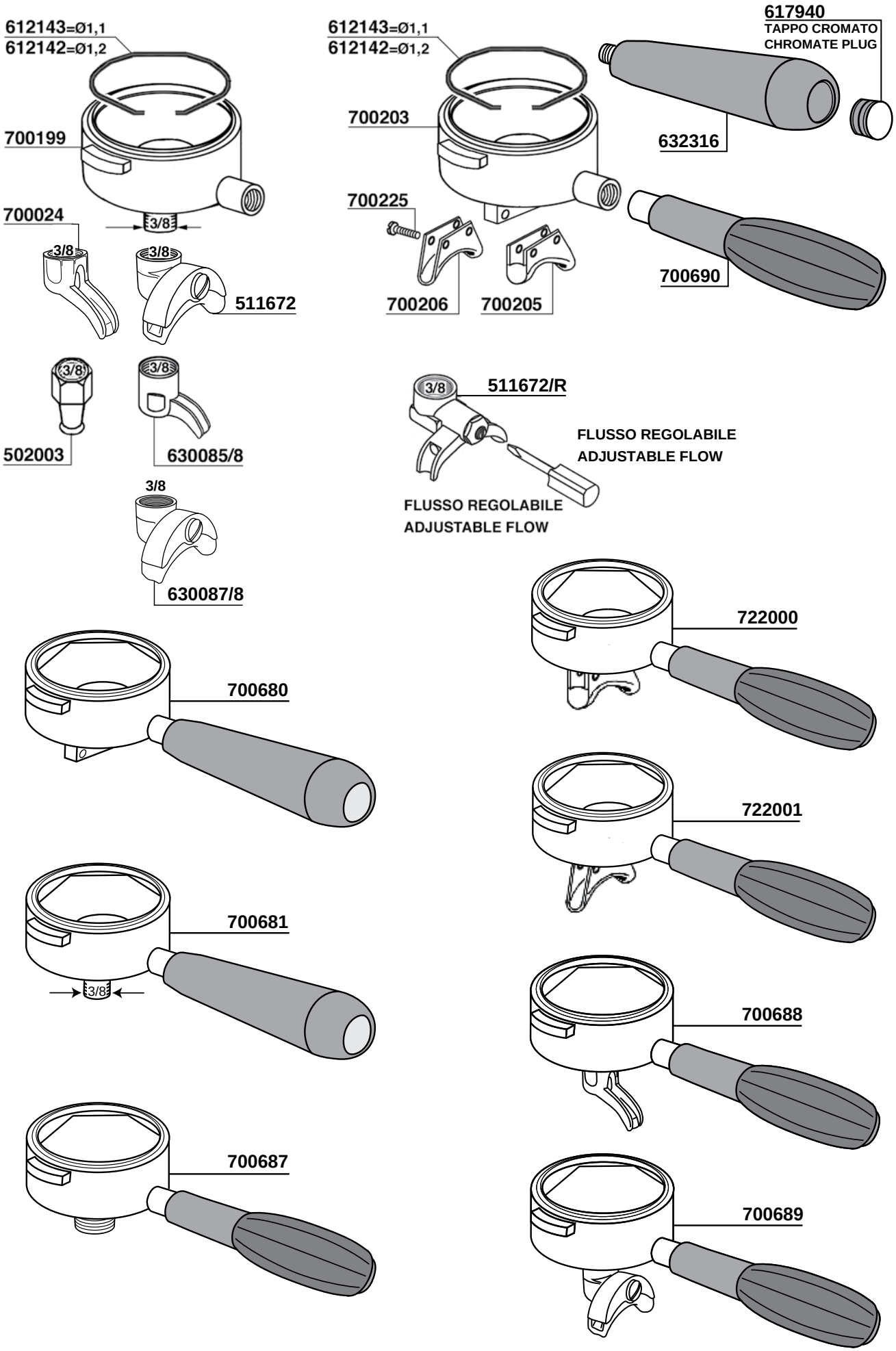
612143=Ø1,1
612142=Ø1,2
700199
700024
3/8
3/8
3/8
511672
502003
3/8
630085/8
3/8
630087/8
612143=Ø1,1
612142=Ø1,2
700203
700225
700206
700205
617940
TAPPO CROMATO
CHROMATE PLUG
632316
700690
3/8
511672/R
FLUSSO REGOLABILE
ADJUSTABLE FLOW
FLUSSO REGOLABILE
ADJUSTABLE FLOW
722000
700680
722001
700681
3/8
700688
700687
700689

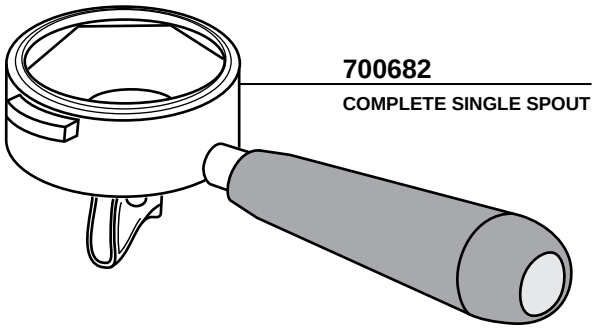

700682
COMPLETE SINGLE SPOUT

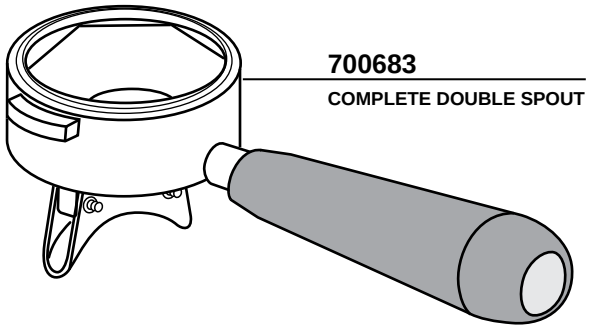

700683
COMPLETE DOUBLE SPOUT

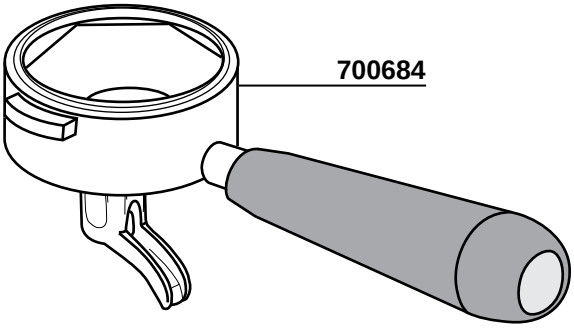

700684

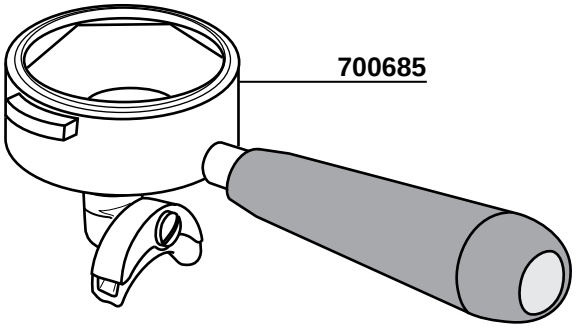

700685

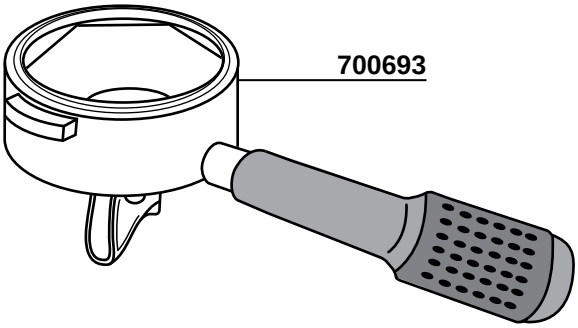

700693

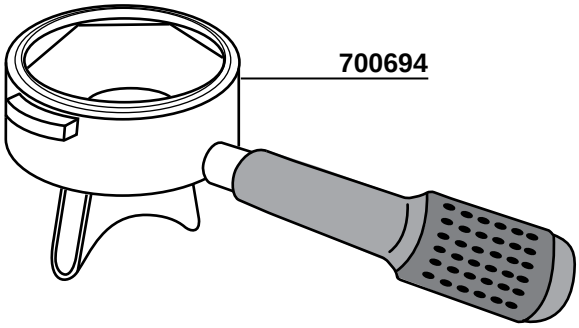

700694

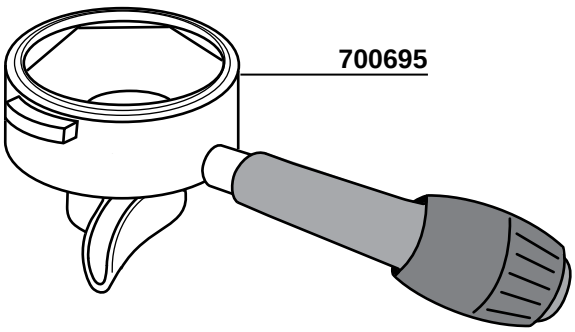

700695

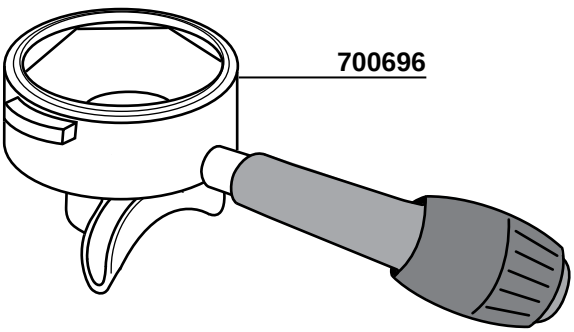

700696

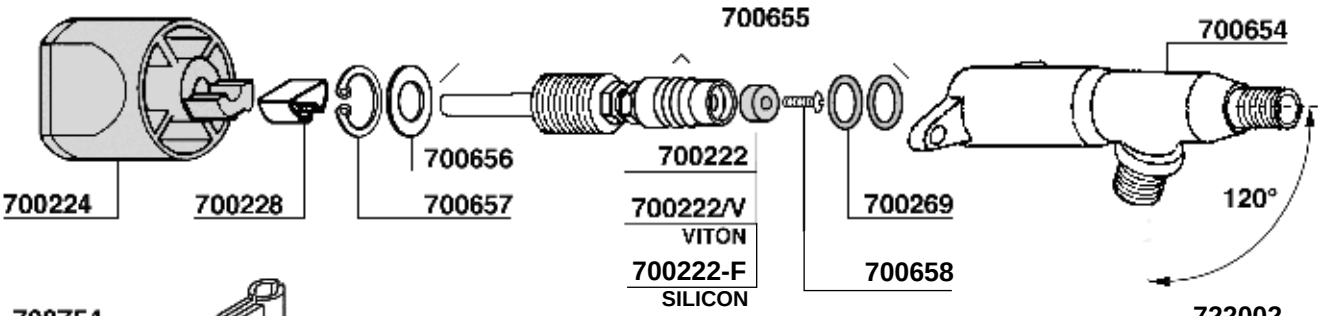

700754
ANTISCOTTATURA
ANTISCORCHING

634278
ANTISCOTTATURA
ANTISCORCHING

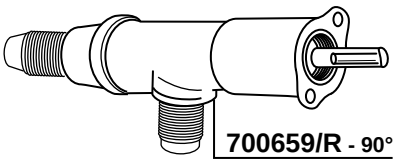

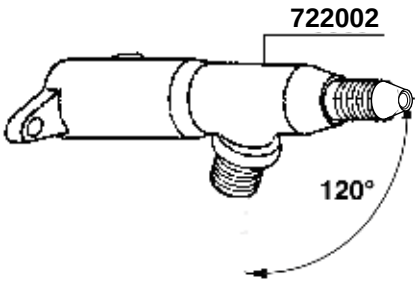

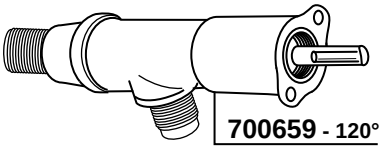

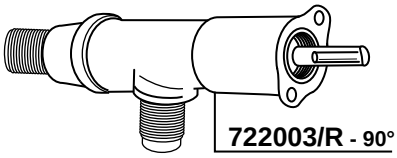

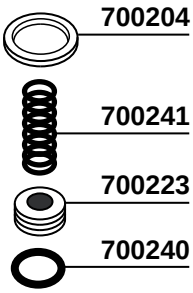

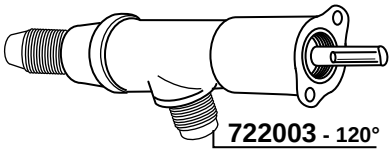

633432
O-RING

703472/M 4 HOLES
633429 2 HOLES

633430 2 HOLES
633433 3 HOLES

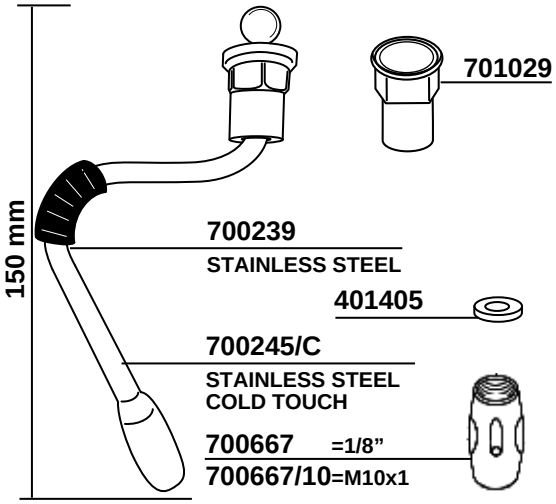

FOR CAPPUCCINATORE

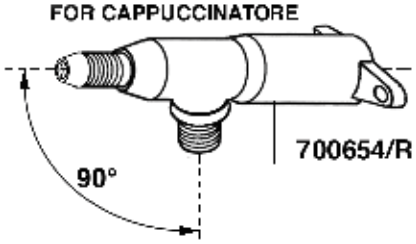

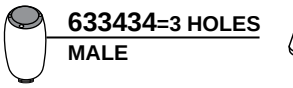

FOR CAPPUCCINATORE

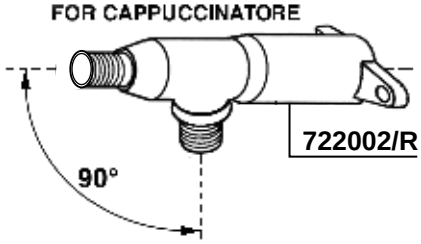

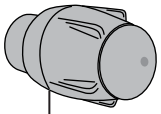

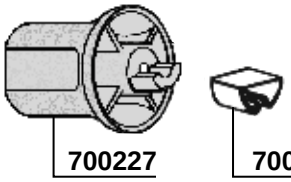

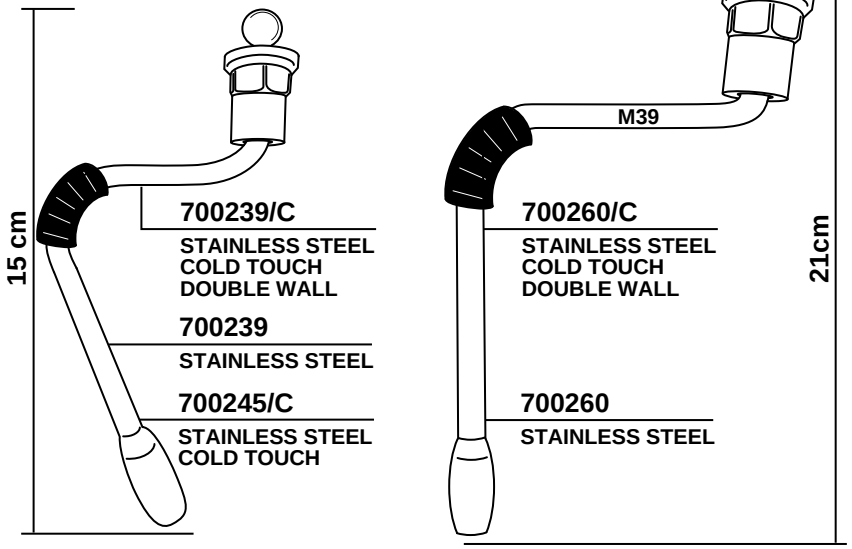
15 cm
700239/C
STAINLESS STEEL
COLD TOUCH
DOUBLE WALL
700239
STAINLESS STEEL
700245/C
STAINLESS STEEL
COLD TOUCH
M39
21cm
700260/C
STAINLESS STEEL
COLD TOUCH
DOUBLE WALL
700260
STAINLESS STEEL

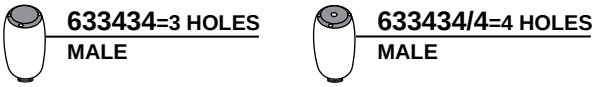
633434=3 HOLES
MALE
633434/4=4 HOLES
MALE

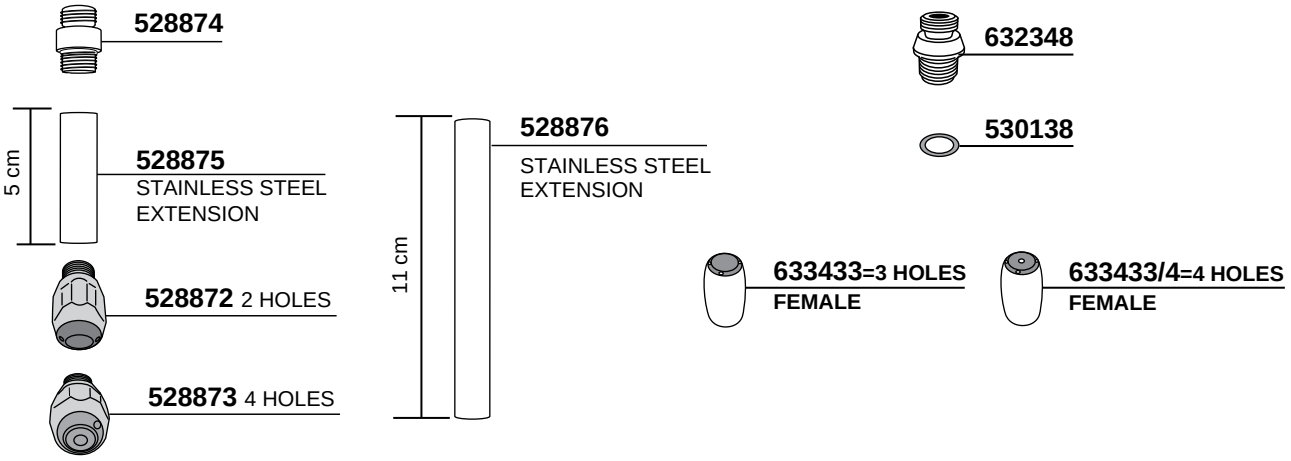
528874
5 cm
528875
STAINLESS STEEL
EXTENSION
528872 2 HOLES
528873 4 HOLES
11 cm
528876
STAINLESS STEEL
EXTENSION
632348
530138
633433=3 HOLES
FEMALE
633433/4=4 HOLES
FEMALE

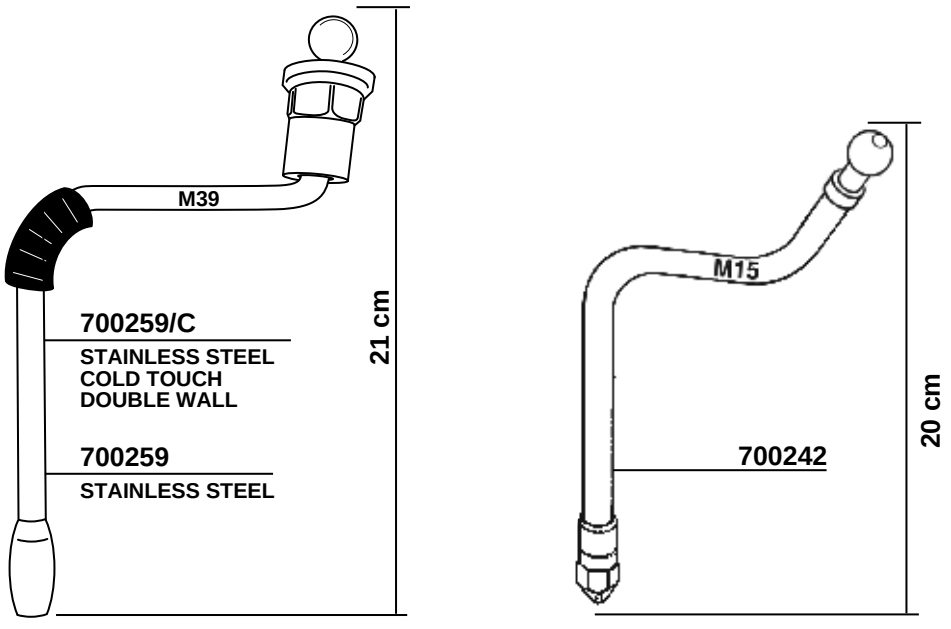
M39
21 cm
700259/C
STAINLESS STEEL
COLD TOUCH
DOUBLE WALL
700259
STAINLESS STEEL
M15
20 cm
700242

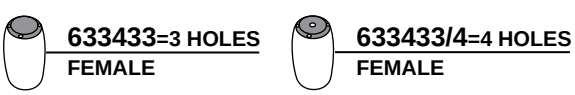
633433=3 HOLES
FEMALE
633433/4=4 HOLES
FEMALE

700181/22=V220
700181/11=V110
700181/24=V24
BOBINA-COIL

700668 =V220
700668/11 =V110
700668/24 =V24

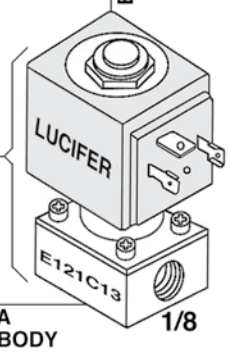

700670
PARTE MECCANICA
SOLENOID VALVE BODY

632018/22 =V220
632018/11 =V110
632018/24 =V24

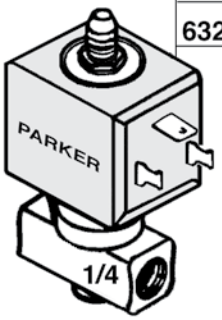

615978

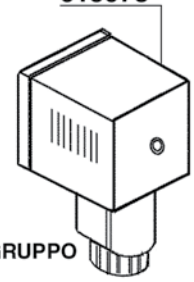

CAPPUCCINATORE
SCARICO CALDAIA/GRUPPO

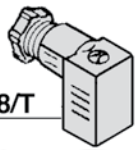

615978/T
615979
530143
617903/G
551937

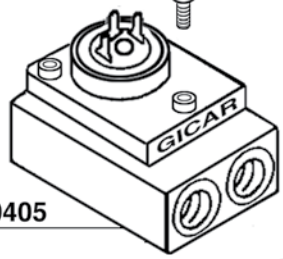

620405

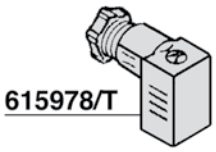

615978/T
615979
530143
617903
551937

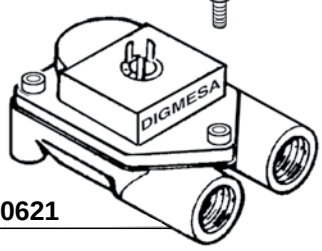

700621

700648/11 =V110/60
700648/22 =V230/50/60
700648/24 =V24/50/60

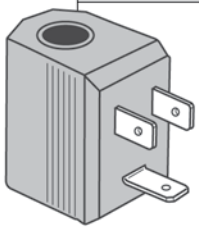

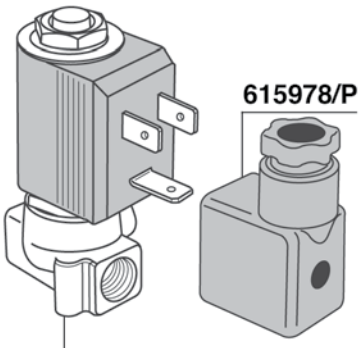

615978/P

700253/11 =V110/60
700253/22 =V220/50/60
700253/24 =V24/50/60

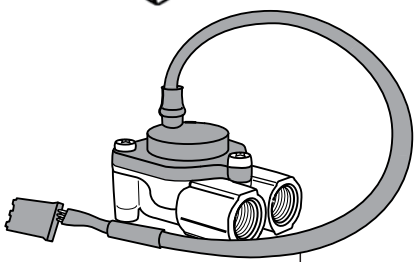

619591 GICAR
619595 DIGMESA

620419
MILK PUMP 24V
FLUID-O-TECH
TYPE M36X30/I

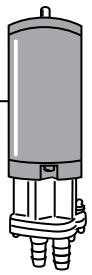

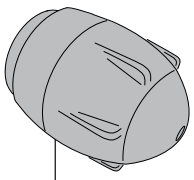

630680
M39

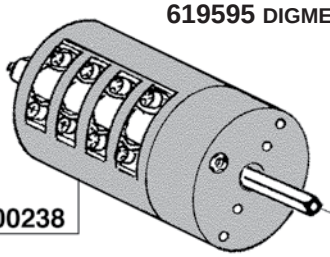

700238

700624

700235
700234
M20

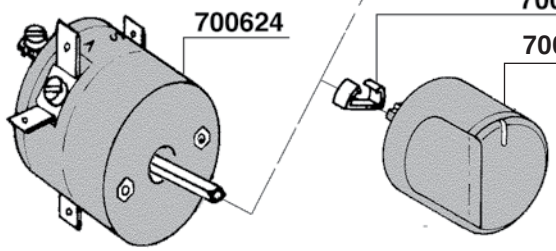

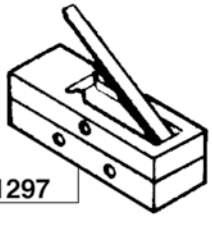

611297

615152
DEVIATORE

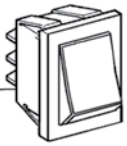

700180
INTERRUT.
SWITCH

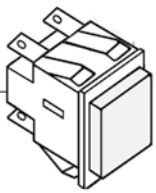

621080
PUSH BUTTON

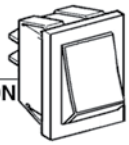

PUMP M32

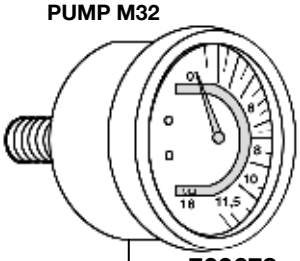

700678

BOILER M32

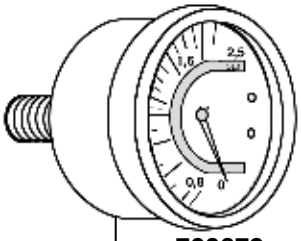

700679

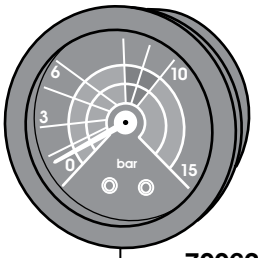

700620
PUMP

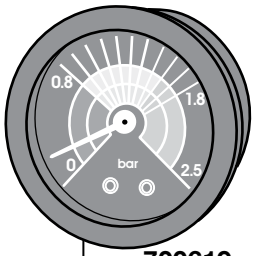

700619
BOILER

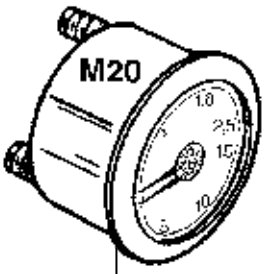

700874
DOPPIA SCALA
TWO SCALES

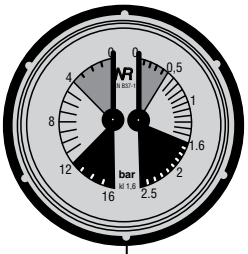

602001
DOPPIA SCALA
TWO SCALES

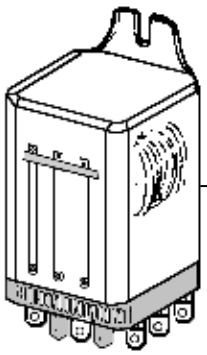

700652/22=V220
700652/24=V24
700652/12=V12 DC BISTRO

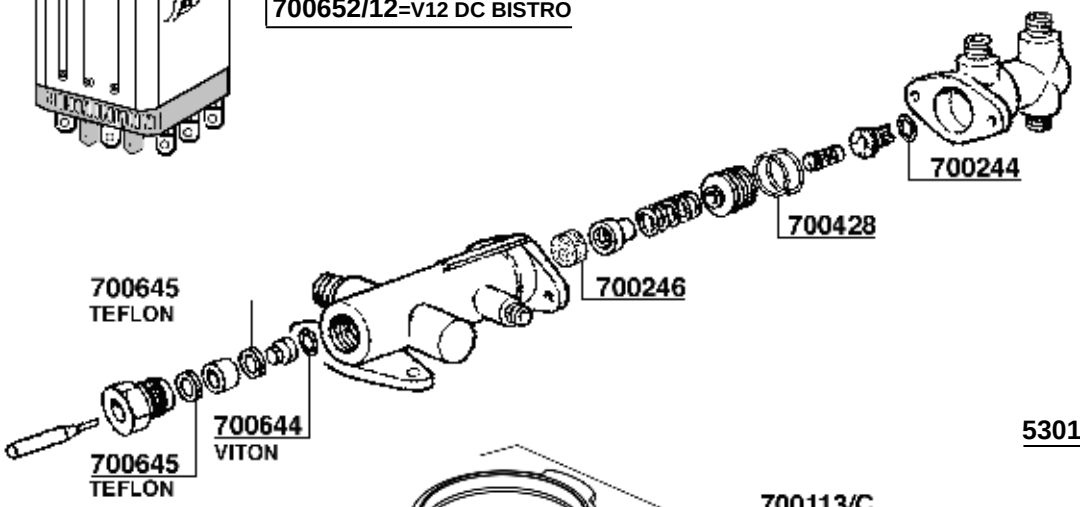

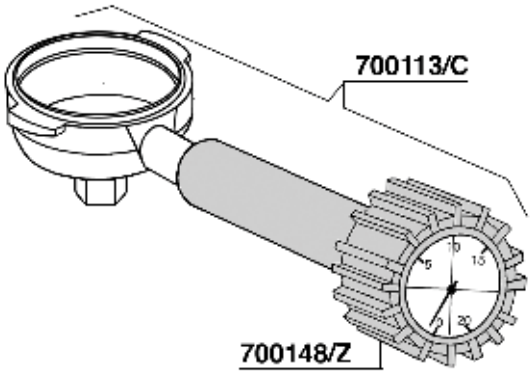

700113/C
700148/Z

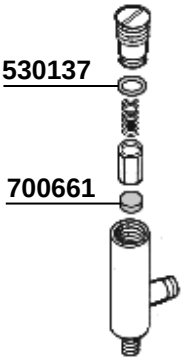

530137
700661

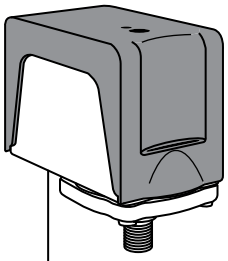

616597 CE/UL

700210=GR/1 W1700 V220/380 | 700212=GR/3 W5790 V220/380

700209=GR/2 W3750 V220/380 | 700213=ALINA W2850 V220/380

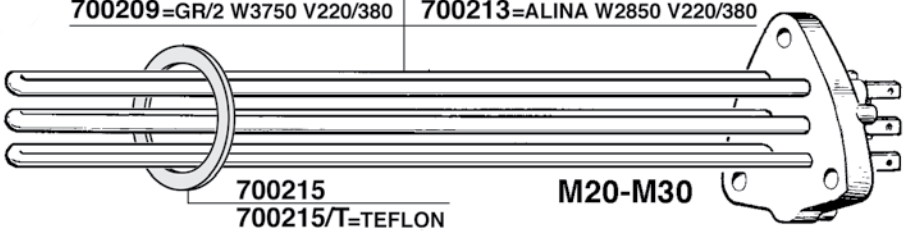

700215

700215/T=TEFLON

M20-M30

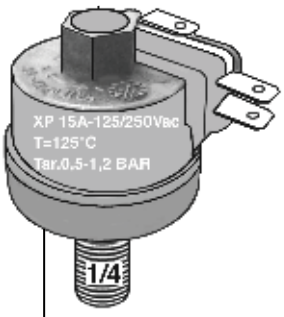

700662

700214

700207/22=GR/1 W2700 V220

700208/22=GR/2 W4000 V220

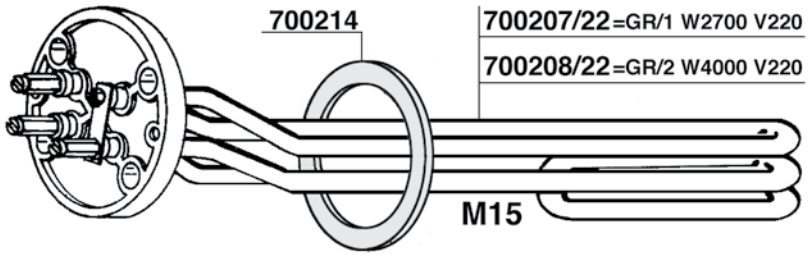

M15

700215

700215/T=TEFLON

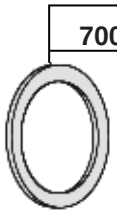

700647/22=W1300 V220

700647/11 =W1300 V110

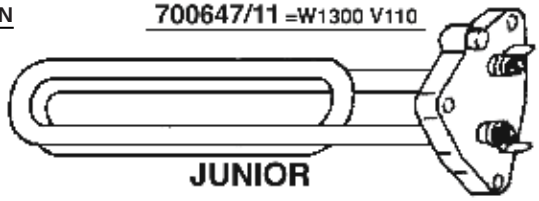

JUNIOR

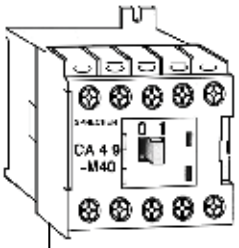

700653/22=V220/50 M30 CLASSIC

700653/12=V12 DC M30-DOSATRON

700653/24=V24 DC

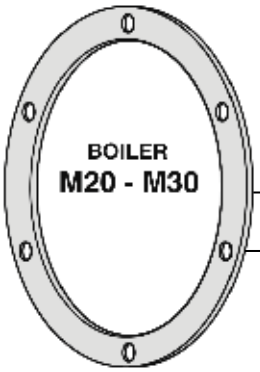

700252

700229

700229/T
TEFLON

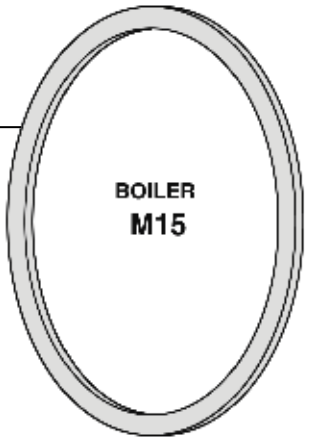



700663=V220

703237

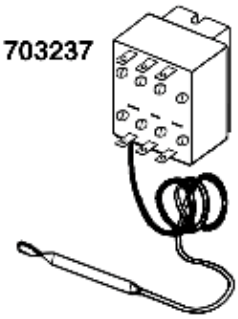

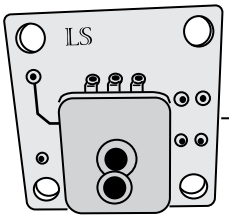

602000

TRASDUTTORE PRESSIONE
PRESSURE SENSOR

MAGNETE

700672

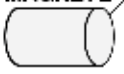

GALLEGGIANTE

700669

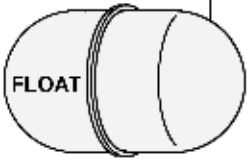

700651

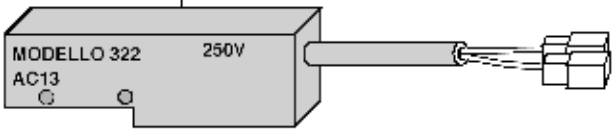

620466

700097

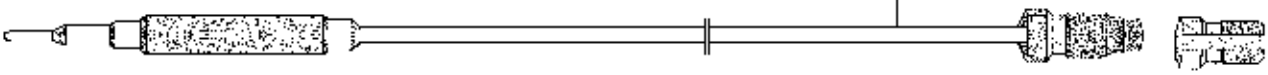

NUOVA RICAMBI PARTI COMPATIBILI CIMBALI Tav.10

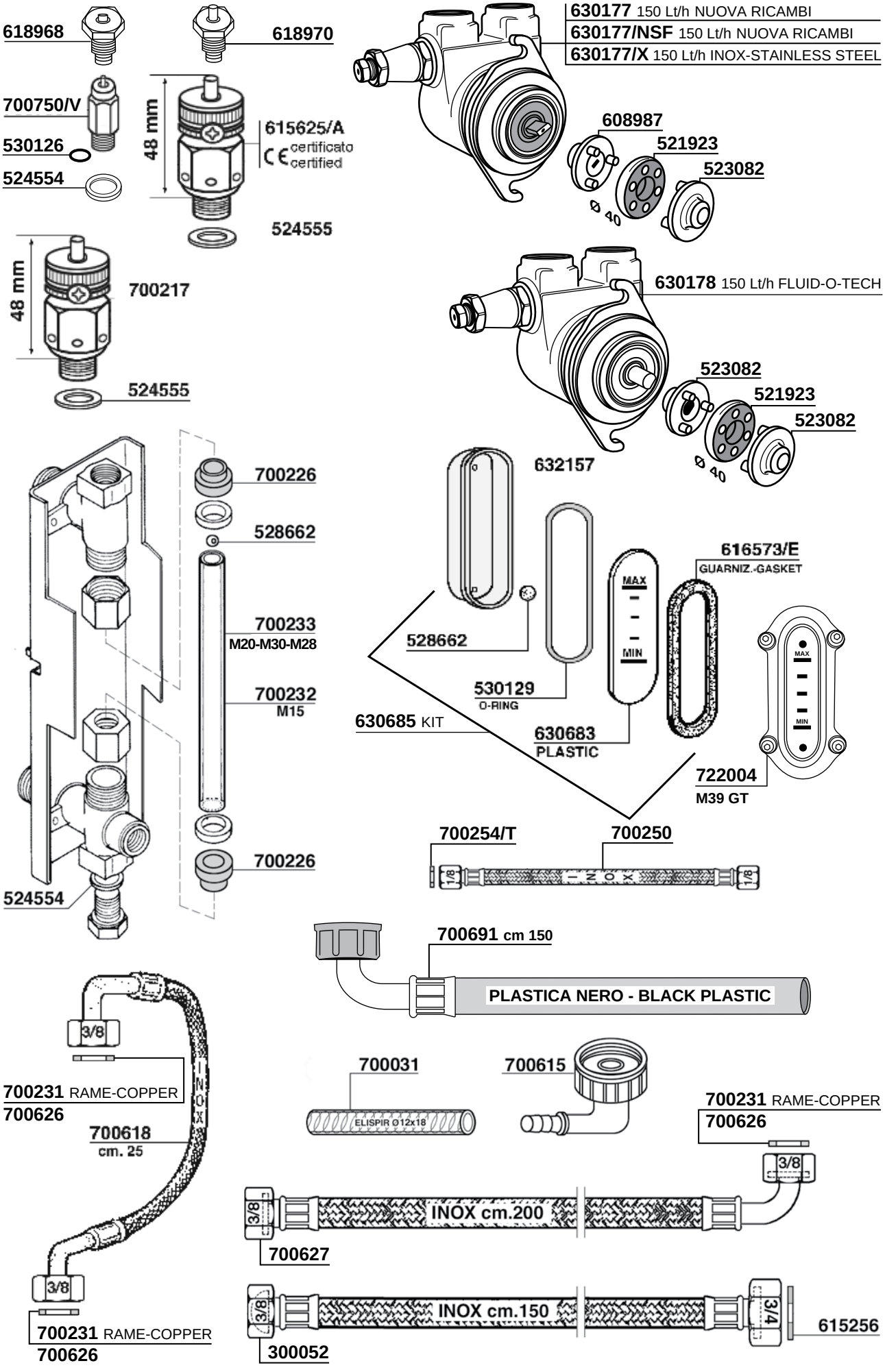

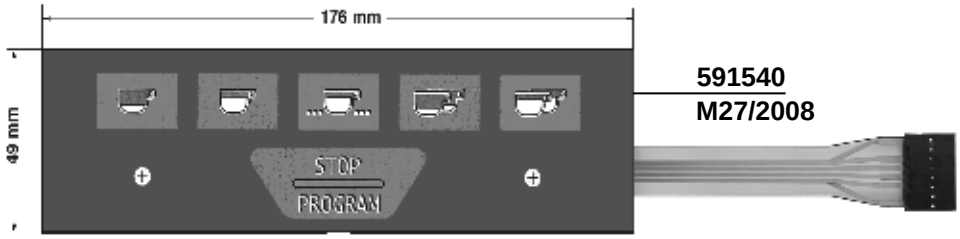

591540
M27/2008

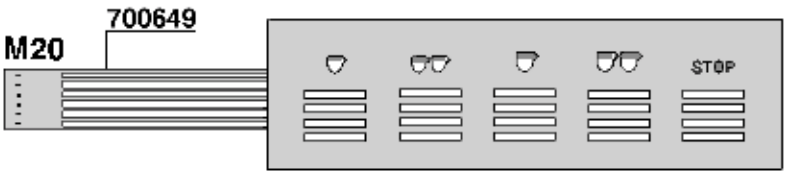

700649
M20

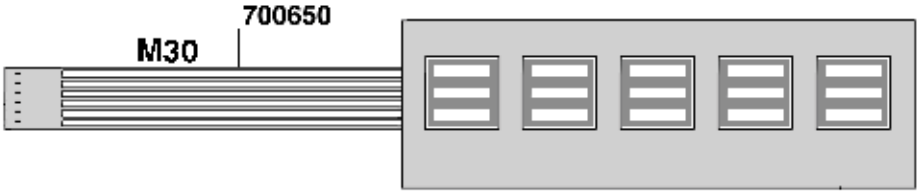

700650
M30

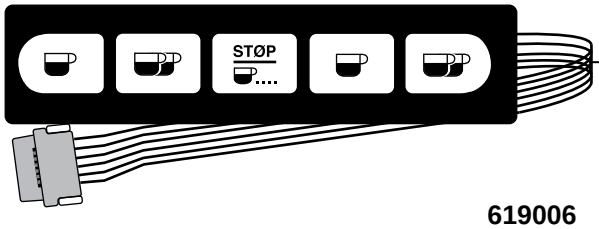

591541
M21 JUNIOR - M22

619006
M27

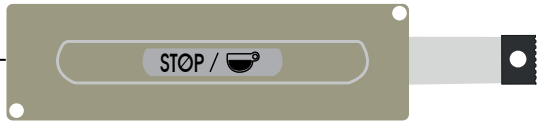

591542
M32

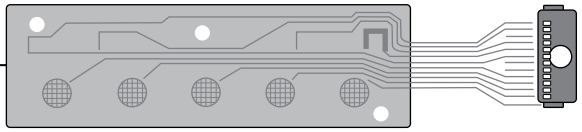

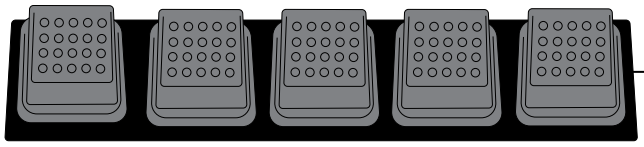

591543
M32 DOSATRON

591544
M39

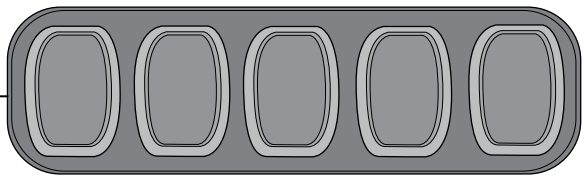

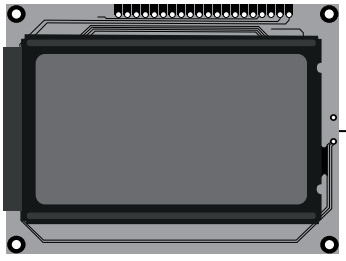

700608
M39 - M39GT



591545
M39 GT CLASS



591546
M39 DOSATRON R - M39 GT



591547
M39 CLASSIC

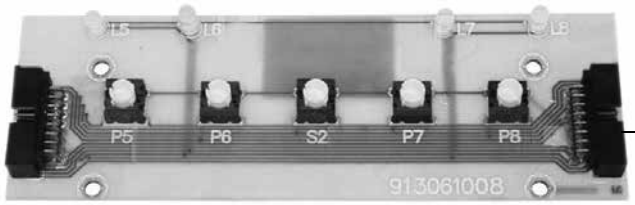

591548
M39 DOSATRON

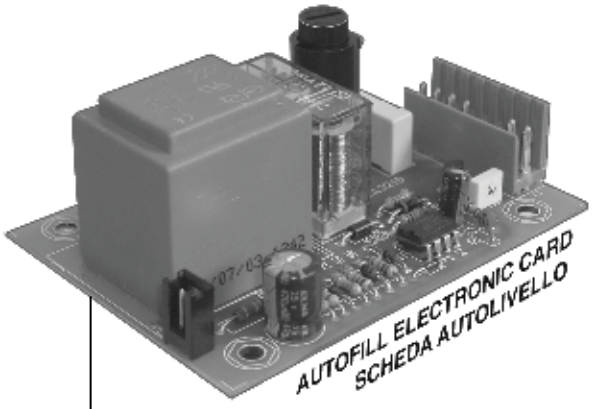

591000
V220 M27

SCHEDA ELETTRONICA UNIFICATA
UNIFIED ELECTRONIC CARD

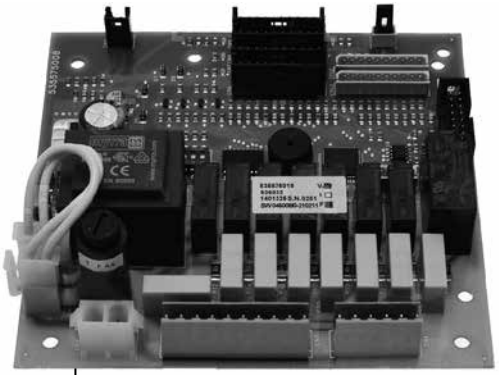

591549
M22-M24-M27/2007-M29-M39

QUADRA - CO.05

505005 3/8 M

703008

700805

529574

524467

505004

403182

503056F

526163
700163
700163/X

552349

514417 5gr
514418 6gr
526418 6gr
521834 6gr
521830 7gr
521835 7gr
521832 8gr
521833 7gr
MICROFORI
MICROHOLES

700883 =mm.8
505007=mm.8 ORIGINAL
700883/V= VITON
700883/5=mm.8,5
505006=mm.8,5 ORIGINAL
700883/5-F= SILICON
700883/80=mm.8,5

516575 12gr
521998 12gr
521994 14gr
521997 14gr
514419 14gr
ridgeless
526208 18gr
526757 21gr
300059 21gr
526758 24gr
521996 14gr
MICROFORI
MICROHOLES

BLIND FILTER

521901
521902

511675

511674

620947/V
620947

300304 220V
300304/11 110V
ODE

700301/22 220V
700301/11 110V
LUCIFER

700152/22 220V
700152/11 110V
PARKER

524769

300305 ODE
700176 LUCIFER
700177 PARKER

620563
1/4M

505008
LEFT

505009
RIGHT

619224

ODE
300015 220V
300015/11 110V

LUCIFER
700181/22 V220
700181/11 V110

PARKER
700179/22 V220
700179/11 V110

612143 Ø1,1 mm
612142 Ø1,2 mm

612523

617940

632317

700300=STRAIGHT

617709=STRAIGHT

617710=STRAIGHT

CO.05

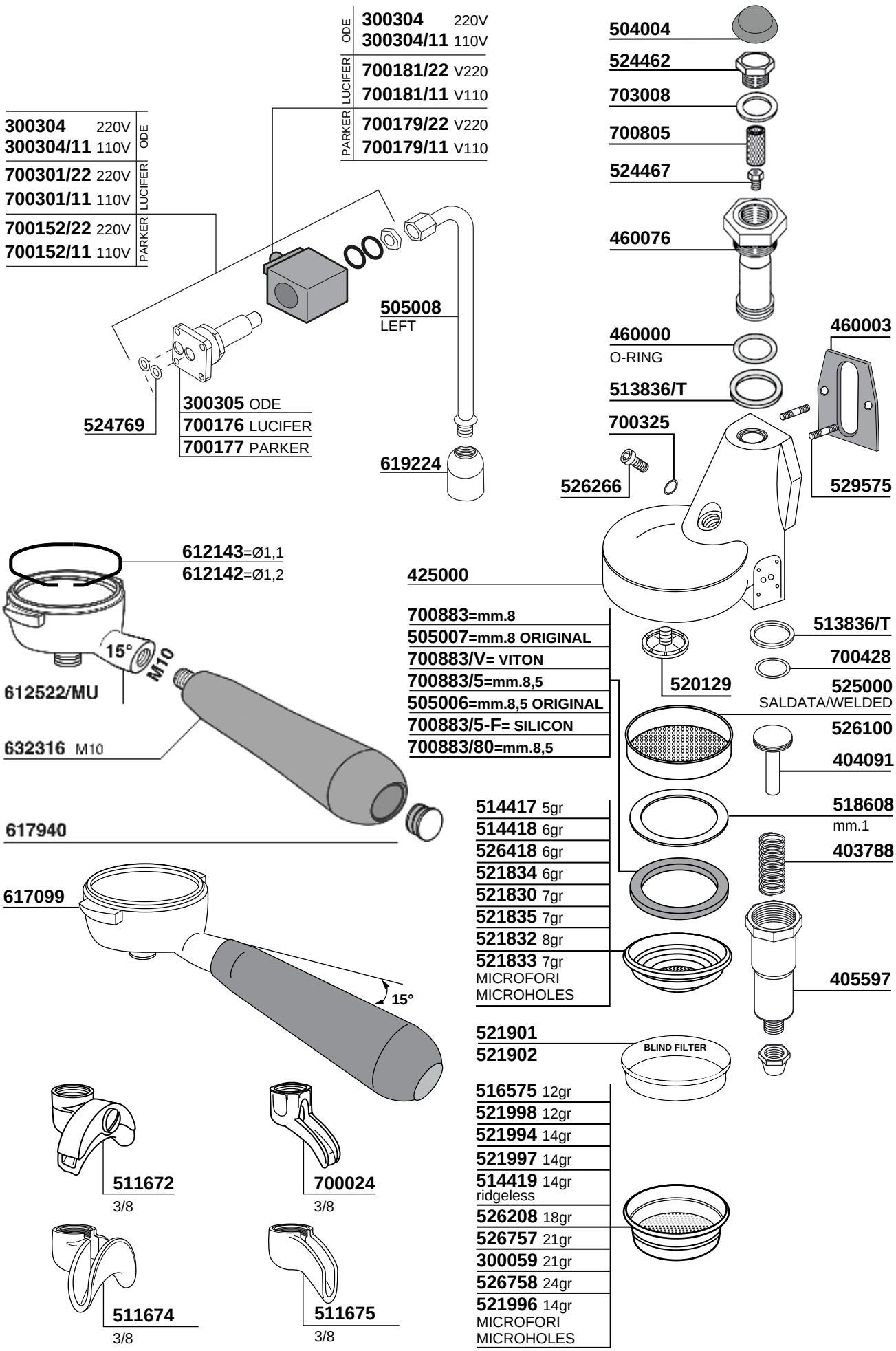
ODE
300304 220V
300304/11 110V
LUCIFER
700181/22 V220
700181/11 V110
PARKER
700179/22 V220
700179/11 V110
ODE
300304 220V
300304/11 110V
LUCIFER
700301/22 220V
700301/11 110V
PARKER
700152/22 220V
700152/11 110V
505008
LEFT
524769
300305 ODE
700176 LUCIFER
700177 PARKER
619224
504004
524462
703008
700805
524467
460076
460000
O-RING
460003
513836/T
700325
526266
529575
612143=Ø1,1
612142=Ø1,2
15°
M10
612522/MU
632316 M10
617940
425000
700883=mm.8
505007=mm.8 ORIGINAL
700883/V= VITON
700883/5=mm.8,5
505006=mm.8,5 ORIGINAL
700883/5-F= SILICON
700883/80=mm.8,5
513836/T
700428
520129
525000
SALDATA/WELDED
526100
404091
518608
mm.1
403788
405597
514417 5gr
514418 6gr
526418 6gr
521834 6gr
521830 7gr
521835 7gr
521832 8gr
521833 7gr
MICROFORI
MICROHOLES
617099
15°
521901
521902
BLIND FILTER
516575 12gr
521998 12gr
521994 14gr
521997 14gr
514419 14gr
ridgeless
526208 18gr
526757 21gr
300059 21gr
526758 24gr
521996 14gr
MICROFORI
MICROHOLES
511672
3/8
700024
3/8
511674
3/8
511675
3/8

QUADRA

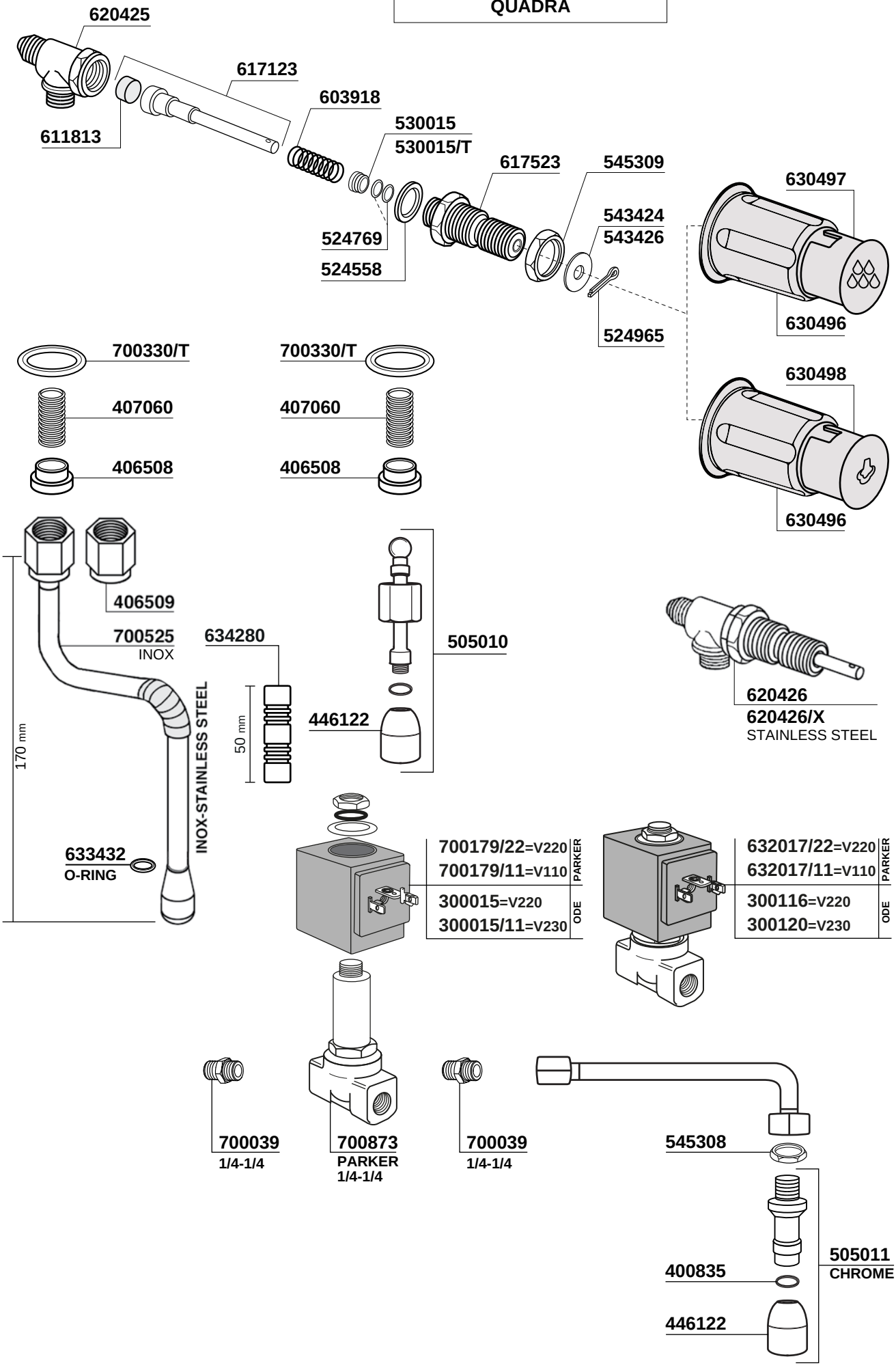
620425
617123
603918
530015
530015/T
611813
617523
545309
630497
543424
543426
524769
524558
524965
630496
700330/T
700330/T
407060
407060
406508
406508
630498
630496
406509
700525
INOX
634280
505010
170 mm
50 mm
446122
INOX-STAINLESS STEEL
620426
620426/X
STAINLESS STEEL
633432
O-RING
700179/22=V220
700179/11=V110
PARKER
300015=V220
300015/11=V230
ODE
632017/22=V220
632017/11=V110
PARKER
300116=V220
300120=V230
ODE
700039
1/4-1/4
700873
PARKER
1/4-1/4
700039
1/4-1/4
545308
505011
CHROME
400835
446122

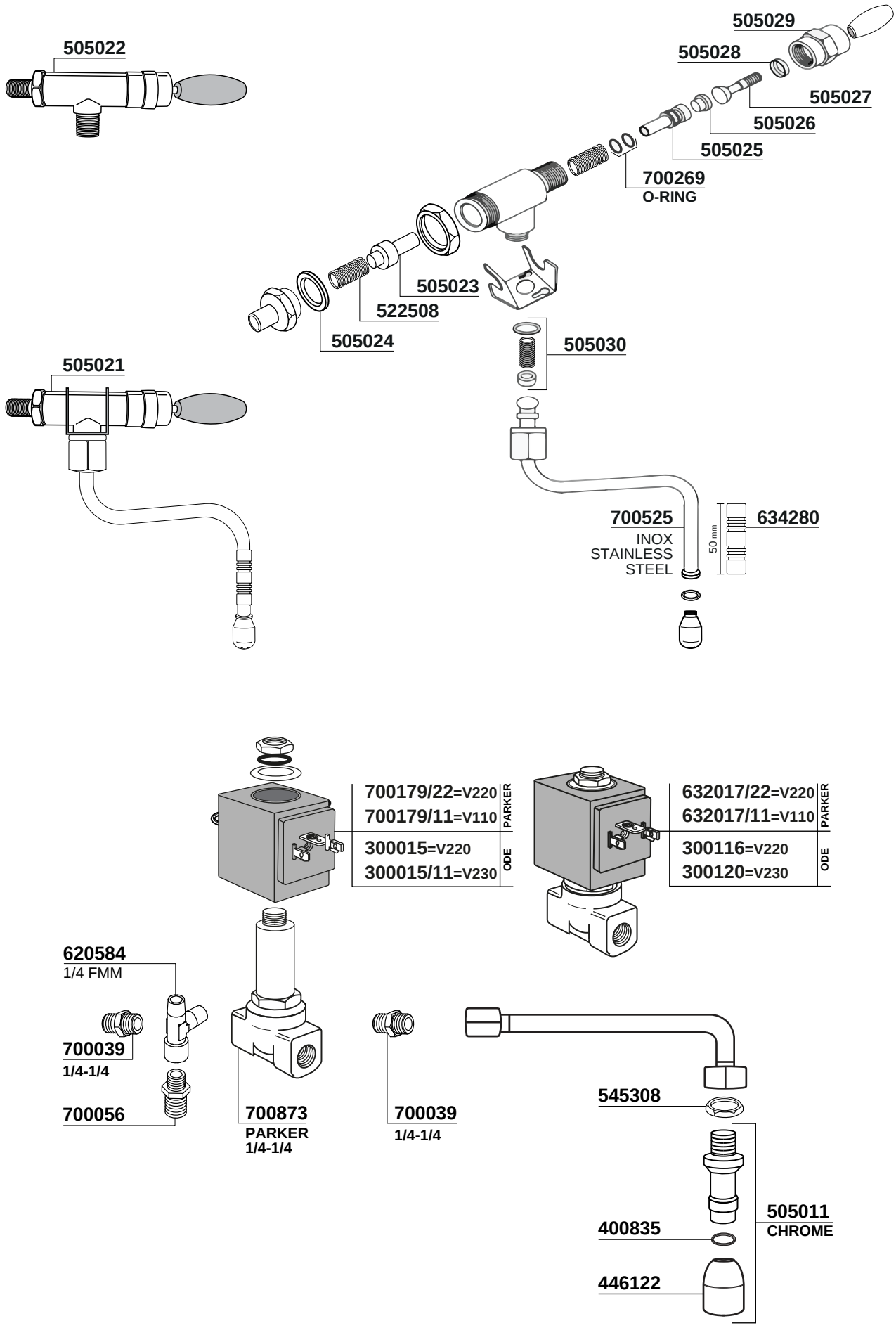
505022
505029
505028
505027
505026
505025
700269
O-RING
505023
522508
505024
505030
505021
700525
INOX
STAINLESS
STEEL
50 mm
634280
700179/22=V220
700179/11=V110
PARKER
300015=V220
300015/11=V230
ODE
632017/22=V220
632017/11=V110
PARKER
300116=V220
300120=V230
ODE
620584
1/4 FMM
700039
1/4-1/4
700056
700873
PARKER
1/4-1/4
700039
1/4-1/4
545308
505011
CHROME
400835
446122

QUADRA - CO.05

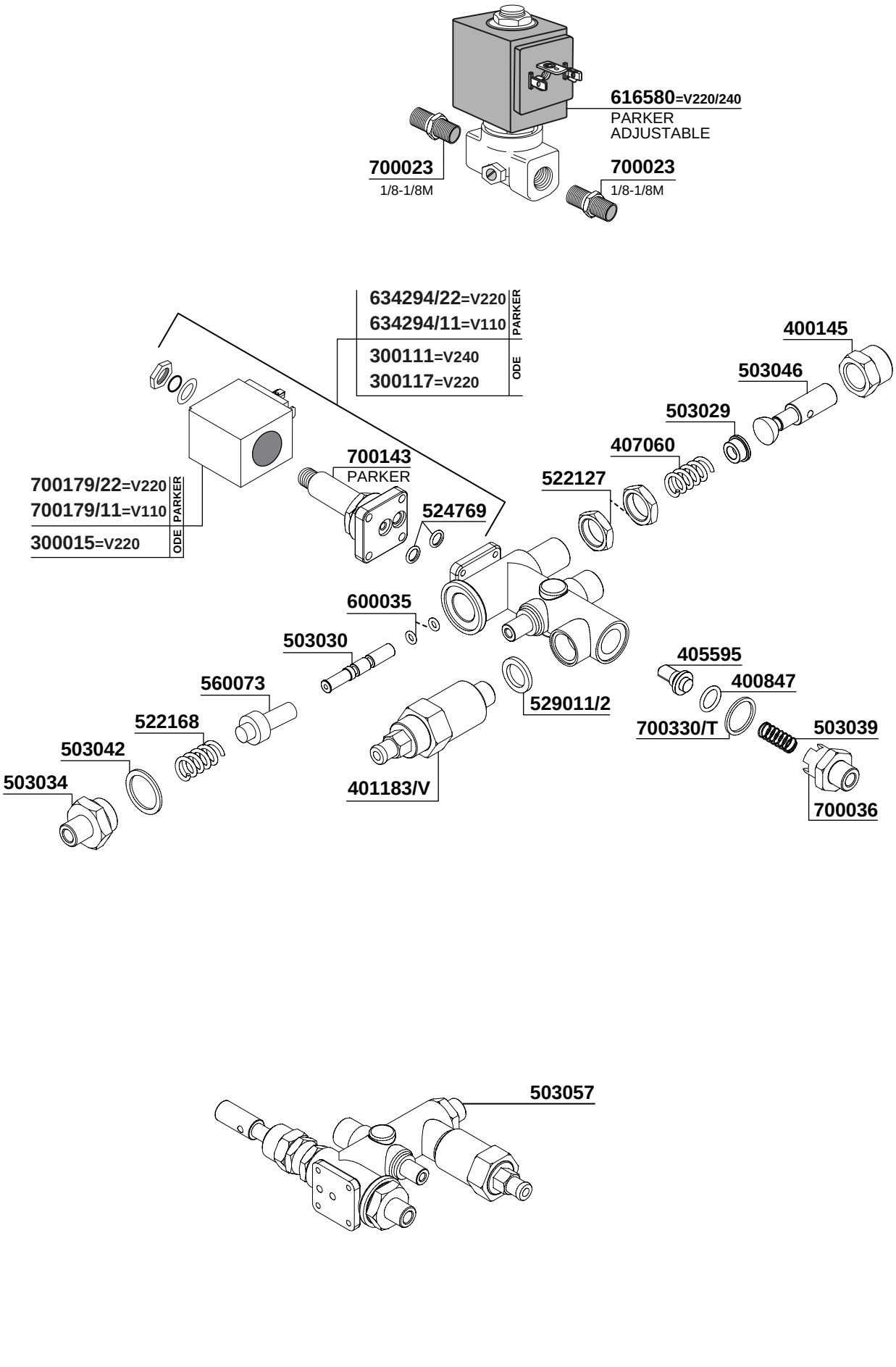
616580=V220/240
PARKER
ADJUSTABLE
700023
1/8-1/8M
700023
1/8-1/8M
634294/22=V220
634294/11=V110
PARKER
300111=V240
300117=V220
ODE
400145
503046
503029
407060
522127
700143
PARKER
524769
700179/22=V220
700179/11=V110
PARKER
300015=V220
ODE
600035
503030
560073
522168
503042
503034
401183/V
529011/2
405595
400847
700330/T
503039
700036
503057

82

QUADRA - CO.05

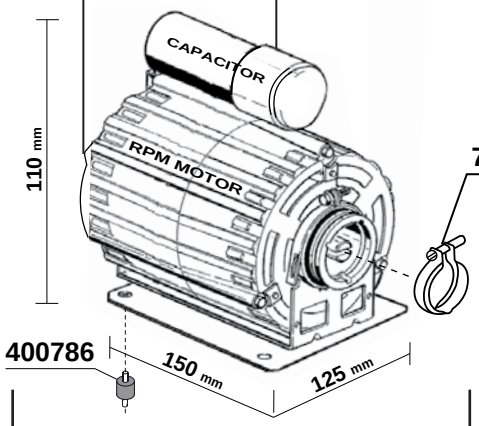

700086/22=V220/50/60 W150 HP0,2
700086/11=V110/60 W120 HP0,1
621112=6,3µF
621113=25µF
700050
400786

MOTORE PICCOLO - SMALL MOTOR

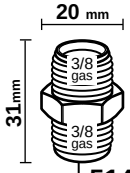

514901
514902 FILTER
514903 TEA

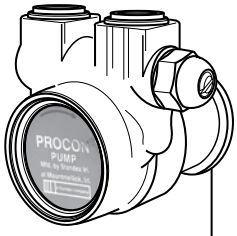

700008 110 Lt/h NSF
700012/X 150 Lt/h NSF
INOX-STAINLESS STEEL

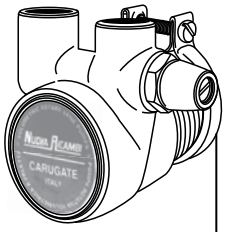

700055 100 Lt/h
700055/2 200 Lt/h
700048/X 100 Lt/h
INOX-STAINLESS STEEL

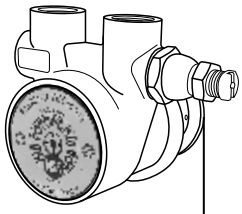

620406 150 Lt/h
620406/X 150 Lt/h
INOX-STAINLESS STEEL
620406/2 200 Lt/h

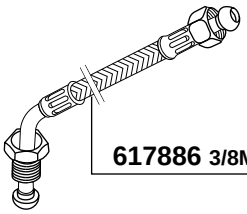

617886 **3/8M-3/8F** 36cm



700185 **3/8F-3/8F** 200cm

616597 CE/UL

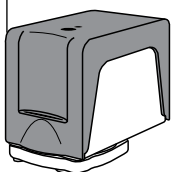

612601
120mm



615624/A
CE certificato
certified

703068

591735 Ø2
591734 Ø3

524554

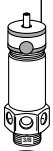

618970

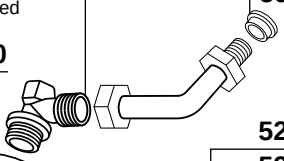

524552/R
529011/4
620579/4
1/2

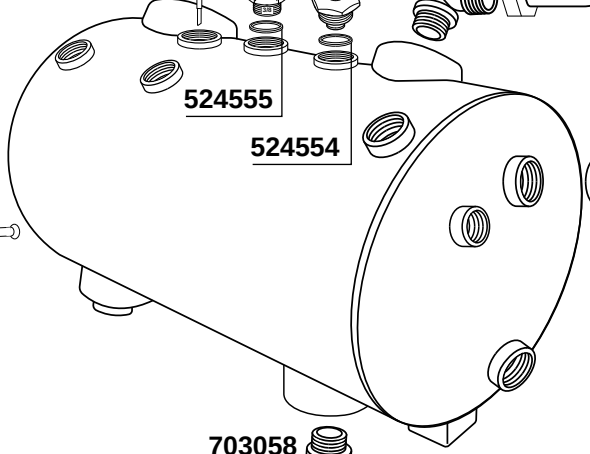

524555
524554

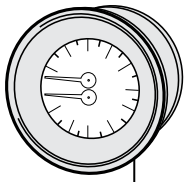

505012
0-3/0-15 BAR

505013
COPPER

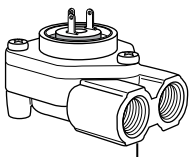

620405
1/4" UL-NSF METAL

300001
125°

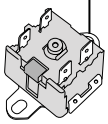

703058

406440

700170/V
1/4

620587
1/4

700747

560059
Ø16

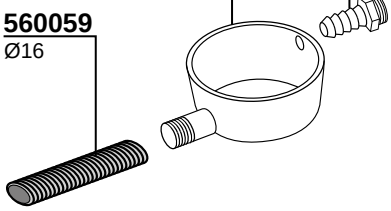

700563

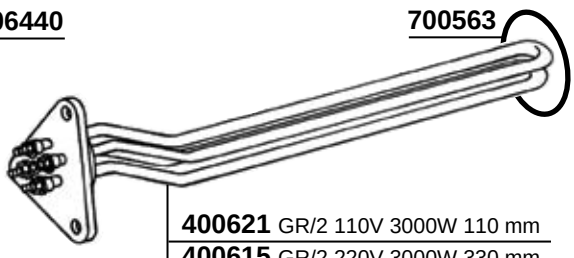

400621 GR/2 110V 3000W 110 mm
400615 GR/2 220V 3000W 330 mm
401834 GR/2 220V 3500W 330 mm
400617 GR3/4 220V 5000W 455 mm

QUADRA - CO.05

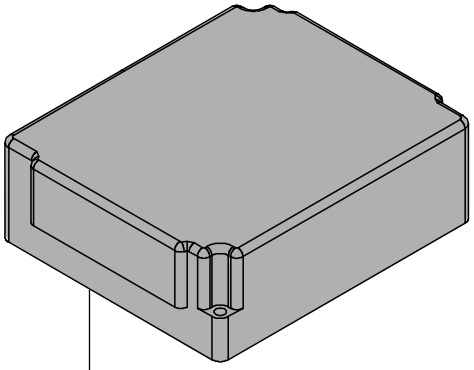

505014 1-2-3GR 230V
GICAR CODE 9.5.22.68G 08
505015 1-2-3GR 115V
GICAR CODE 9.5.22.74G 04

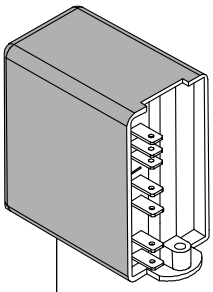

505020 230/240V
GICAR CODE 9.1.41.30G 00
QUADRA

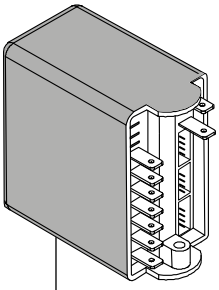

505031 230/240V
GICAR CODE 9.9.37.93G
CO.05

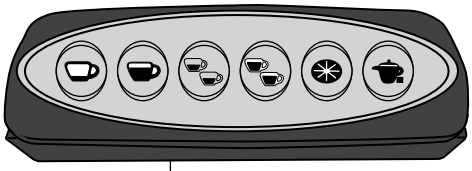

505016 ORIGINAL
GICAR CODE 9.9.07.56G

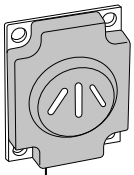

505032

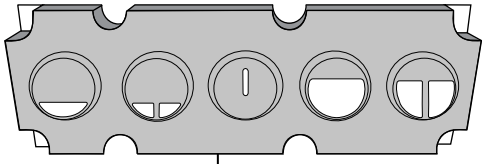

505033

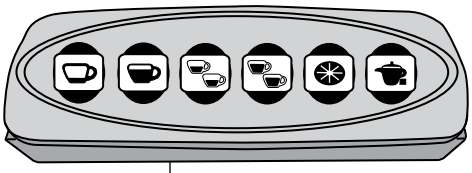

620734
GICAR CODE 9.9.07.41G

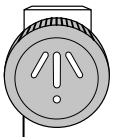

505034

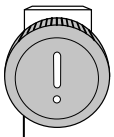

505035

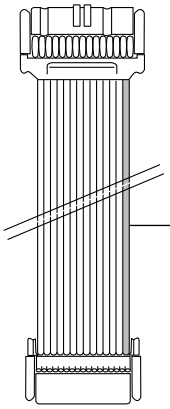

620706 600mm. 16PIN
620707 800mm. 16PIN
505019 1100mm. 16PIN

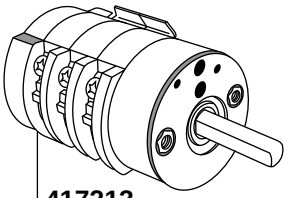

417213
20A 0-1-2

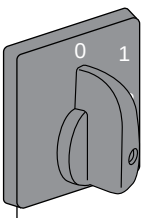

417214

ROSSO
RED

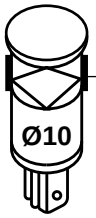

505017

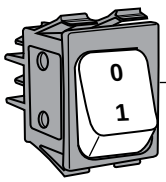

700382
ORANGE

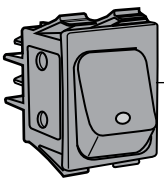

579671
BLACK

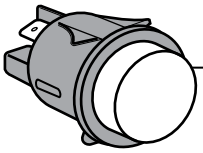

618010 RED

VERDE
GREEN

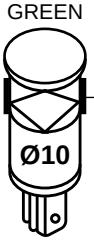

505018

COFFEE QUEEN

M - 2

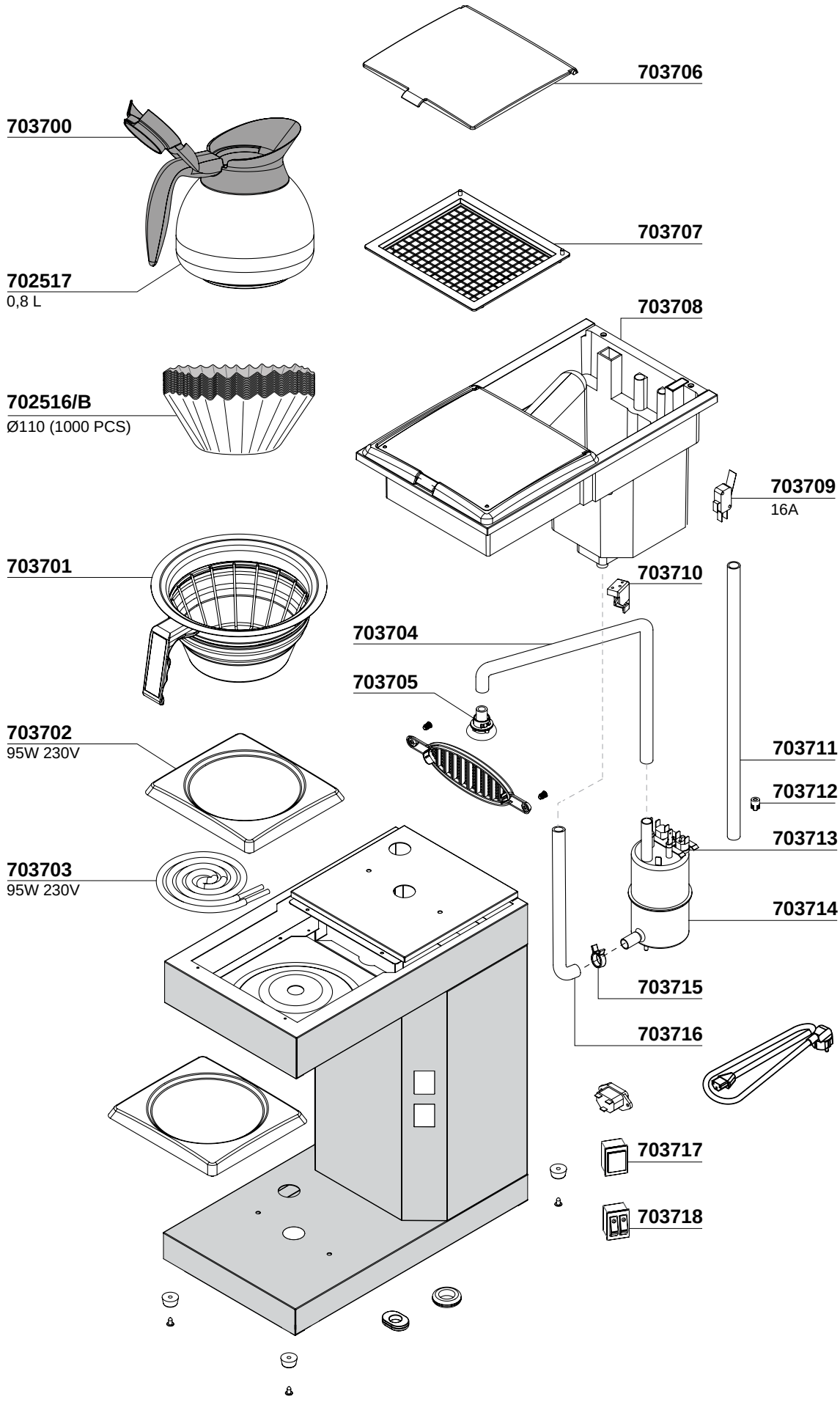



702515/TK

MACCHINA PER CAFFE' A FILTRO
KINETIC SYSTEM 220/230V

COFFEE MACHINE FOR FILTER
KINETIC SYSTEM 220/230V



702516/B

CONFEZIONE FILTRI CARTA
1000 PZ.

PAPER FILTERS PACK
1000 PZ.

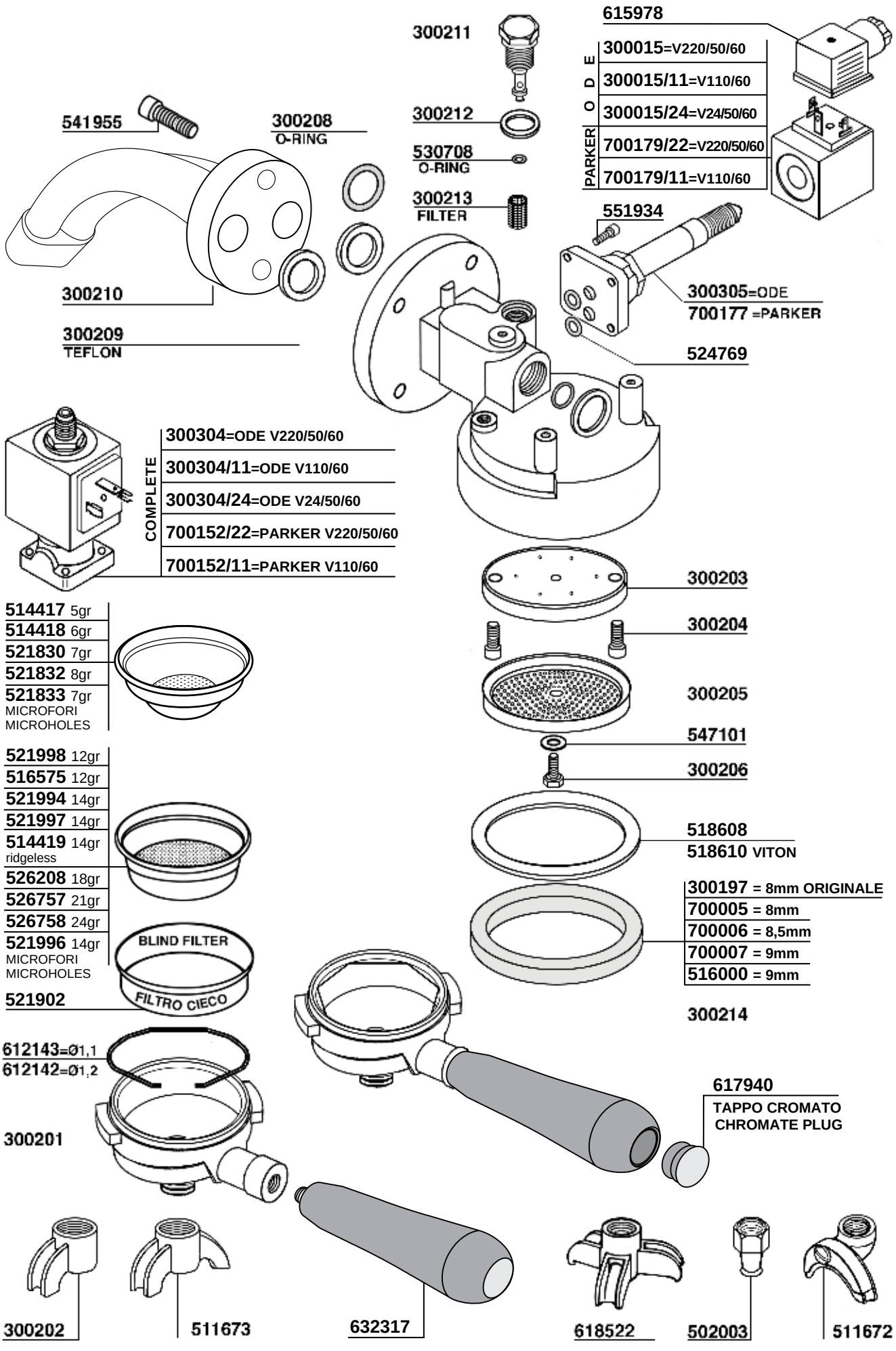
615978
ODE
300015=V220/50/60
300015/11=V110/60
300015/24=V24/50/60
PARKER
700179/22=V220/50/60
700179/11=V110/60
300211
300212
530708
O-RING
300213
FILTER
541955
300208
O-RING
300210
300209
TEFLON
551934
300305=ODE
700177 =PARKER
524769
COMPLETE
300304=ODE V220/50/60
300304/11=ODE V110/60
300304/24=ODE V24/50/60
700152/22=PARKER V220/50/60
700152/11=PARKER V110/60
300203
300204
300205
547101
300206
518608
518610 VITON
300197 = 8mm ORIGINALE
700005 = 8mm
700006 = 8,5mm
700007 = 9mm
516000 = 9mm
300214
514417 5gr
514418 6gr
521830 7gr
521832 8gr
521833 7gr
MICROFORI
MICROHOLES
521998 12gr
516575 12gr
521994 14gr
521997 14gr
514419 14gr
ridgeless
526208 18gr
526757 21gr
526758 24gr
521996 14gr
MICROFORI
MICROHOLES
BLIND FILTER
FILTRO CIECO
521902
612143=Ø1,1
612142=Ø1,2
300201
617940
TAPPO CROMATO
CHROMATE PLUG
300202
511673
632317
618522
502003
511672

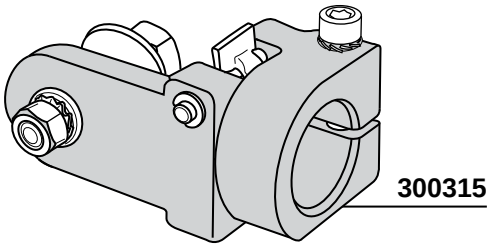
300315

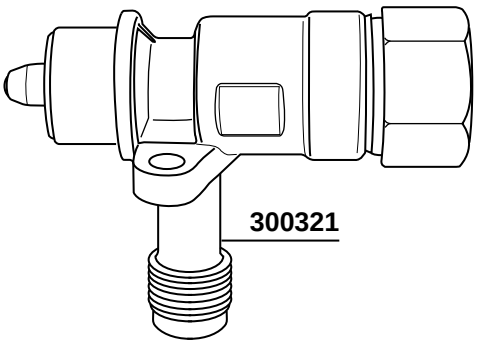
300321

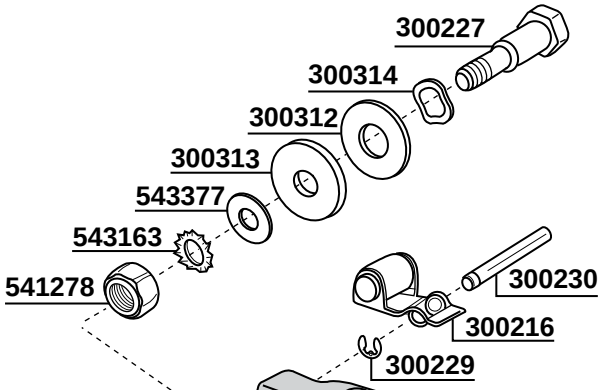
300227
300314
300312
300313
543377
543163
541278
300230
300216
300229

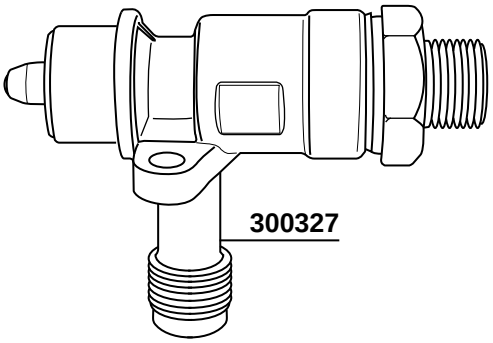
300327

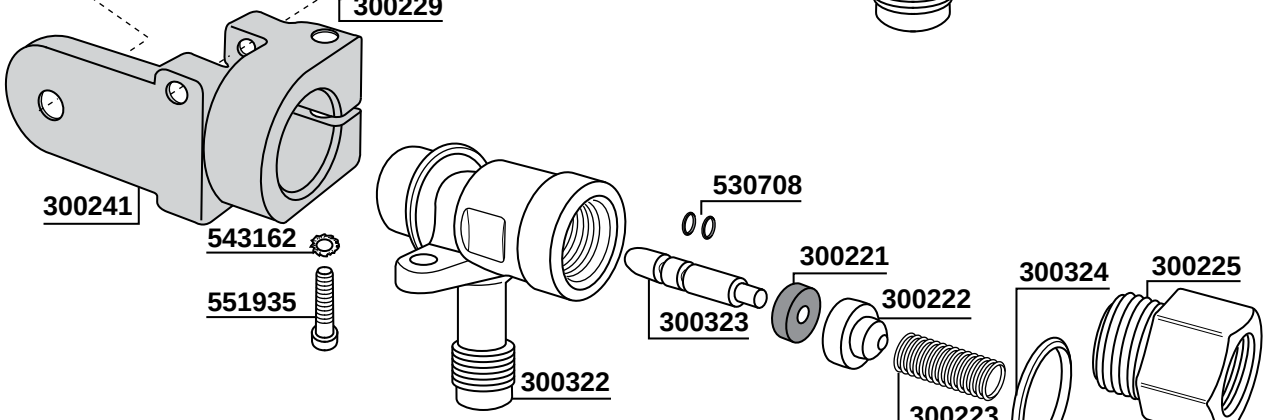
300241
543162
551935
530708
300323
300221
300222
300223
300322
300324
300225
300325

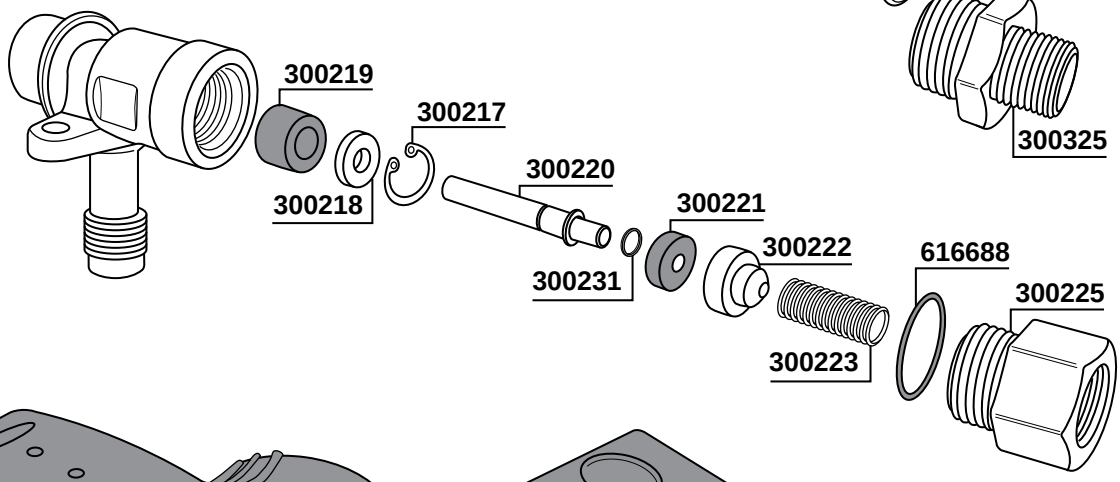
300219
300218
300217
300220
300231
300221
300222
300223
616688
300225

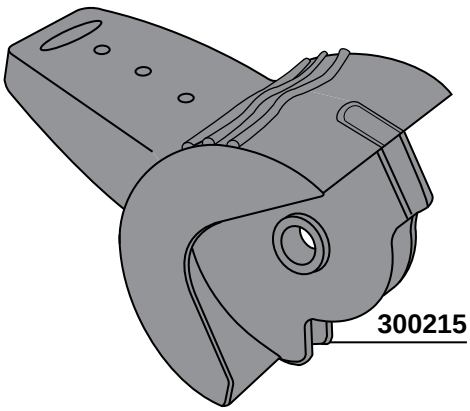
300215

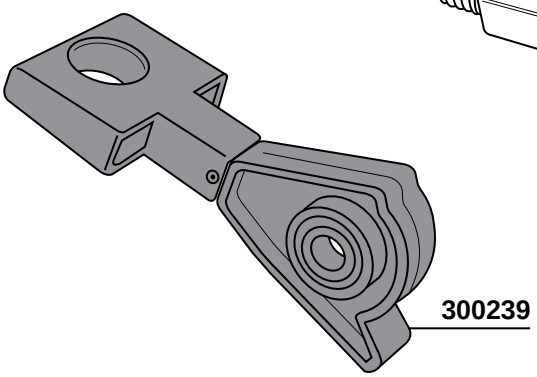
300239

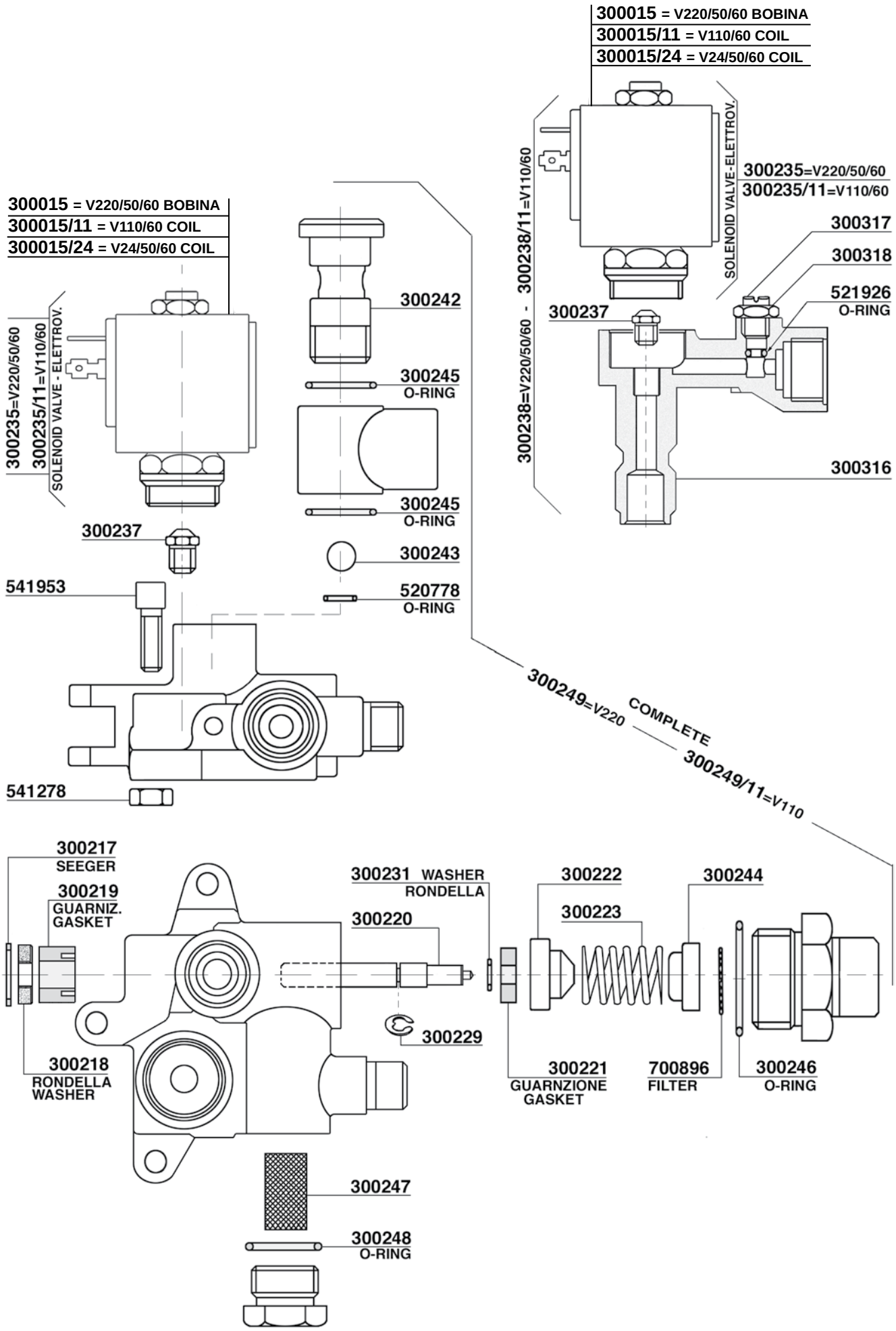
300015 = V220/50/60 BOBINA
300015/11 = V110/60 COIL
300015/24 = V24/50/60 COIL
300235=V220/50/60
300235/11=V110/60
SOLENOID VALVE - ELETTROV.
300238/11=V110/60
300238=V220/50/60 -
300317
300318
521926
O-RING
300237
300316
300242
300245
O-RING
300245
O-RING
300243
520778
O-RING
541953
541278
300249=V220
COMPLETE
300249/11=V110
300217
SEEGER
300219
GUARNIZ.
GASKET
300231 WASHER
RONDELLA
300220
300222
300223
300244
300229
300218
RONDELLA
WASHER
300221
GUARNZIONE
GASKET
700896
FILTER
300246
O-RING
300247
300248
O-RING

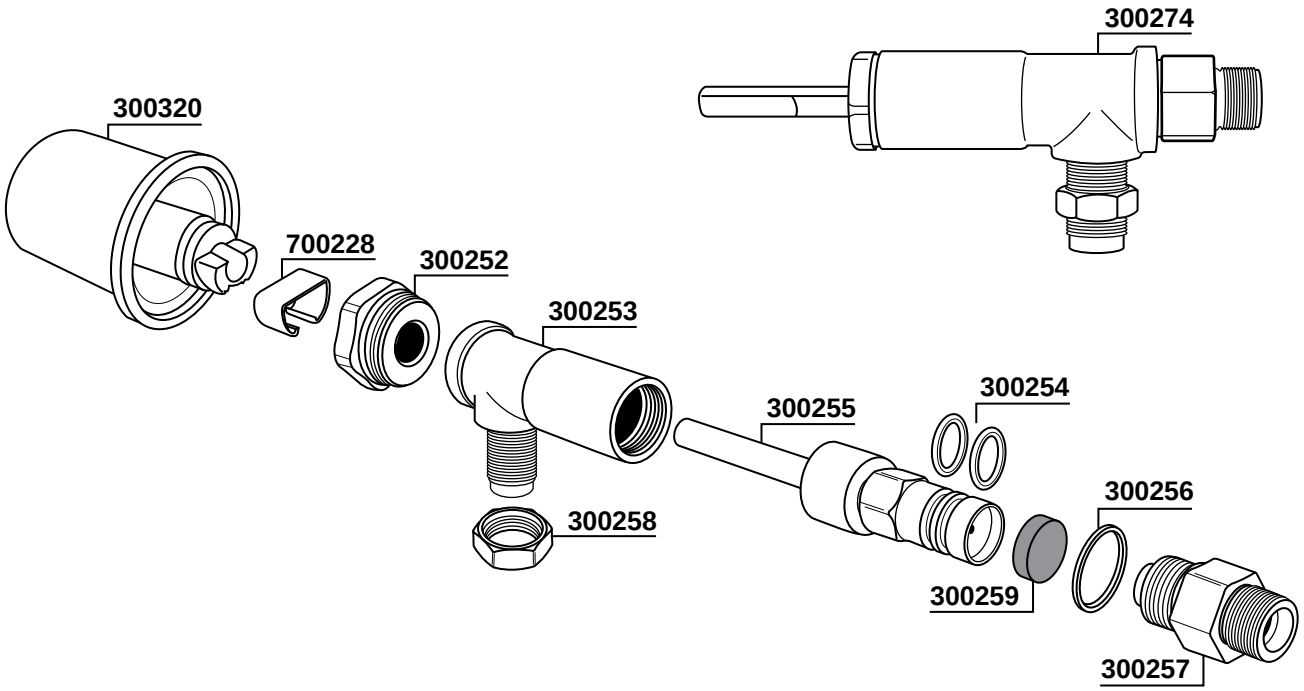
300274
300320
700228
300252
300253
300254
300255
300256
300258
300259
300257

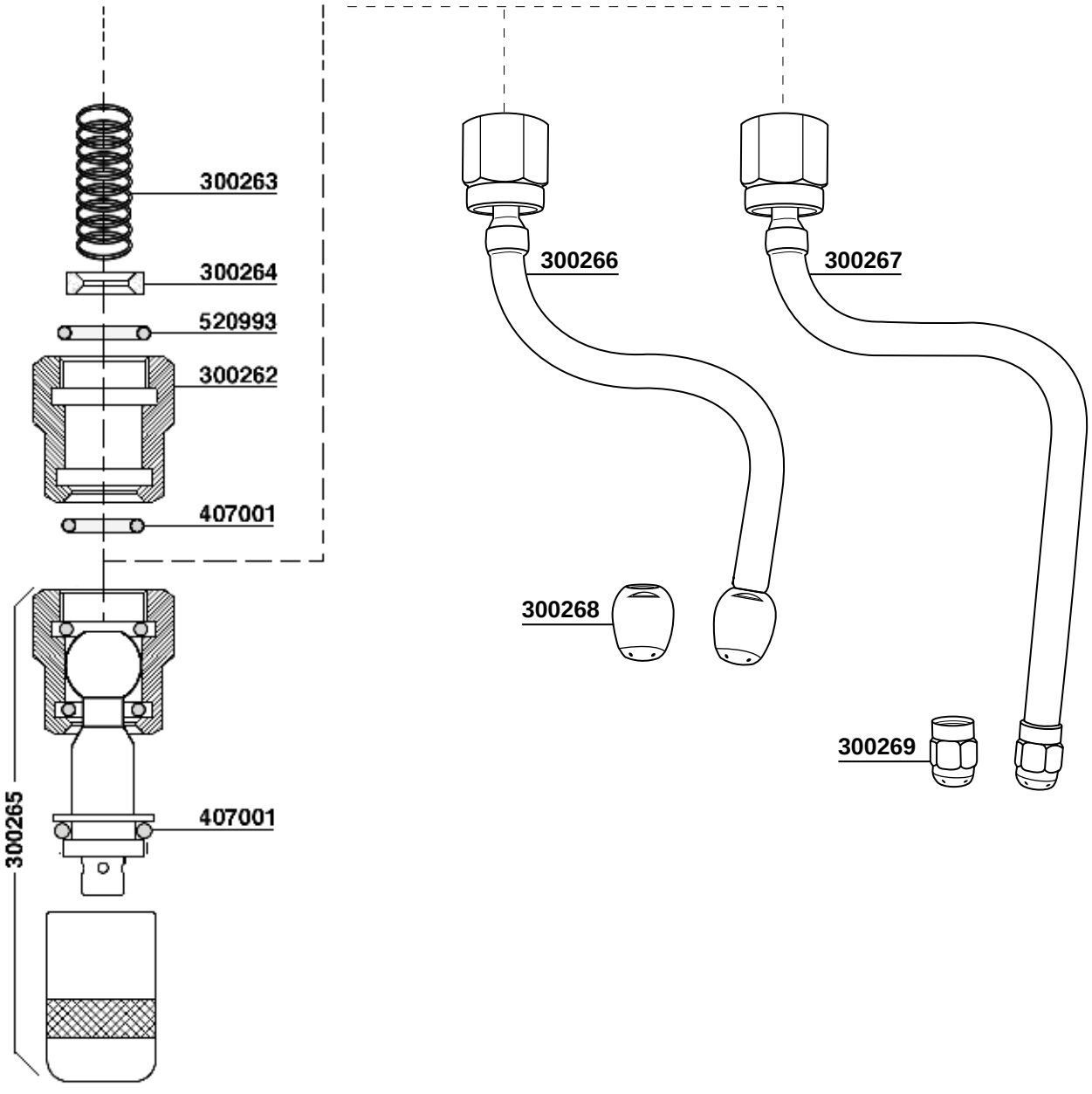
300263
300264
520993
300262
407001
300265
407001
300266
300267
300268
300269

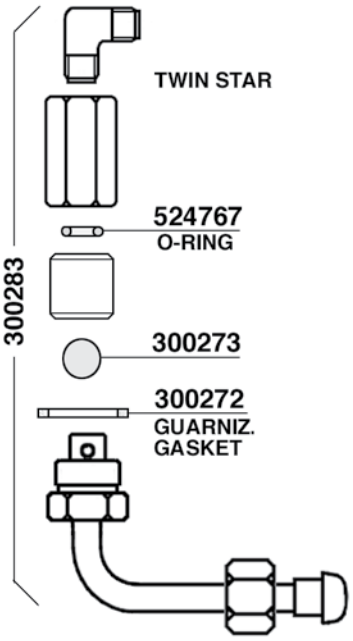
TWIN STAR
524767
O-RING
300283
300273
300272
GUARNIZ.
GASKET

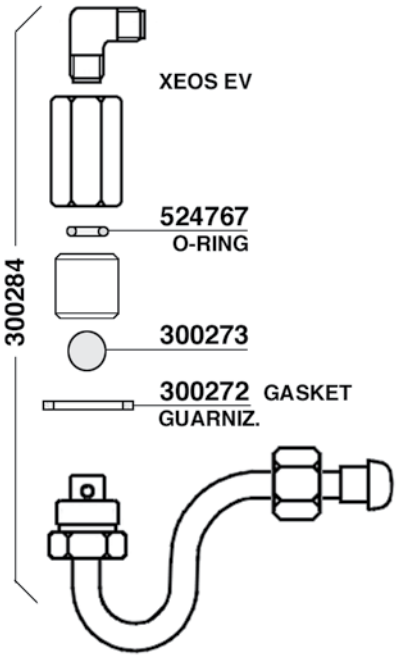
XEOS EV
524767
O-RING
300284
300273
300272 GASKET
GUARNIZ.

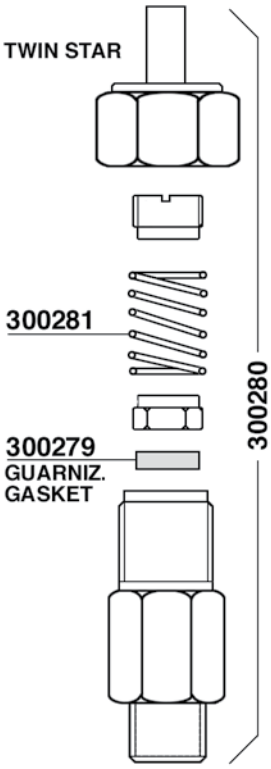
TWIN STAR
300281
300279
GUARNIZ.
GASKET
300280

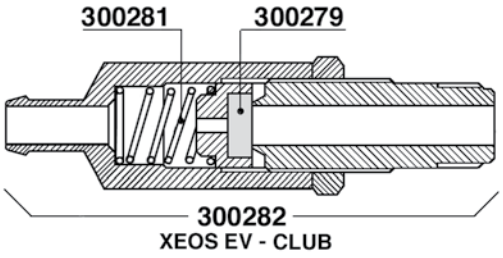
300281
300279
300282
XEOS EV - CLUB

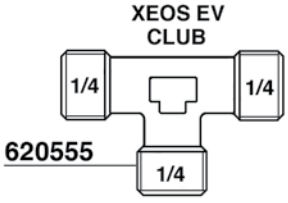
XEOS EV
CLUB
1/4
1/4
620555
1/4

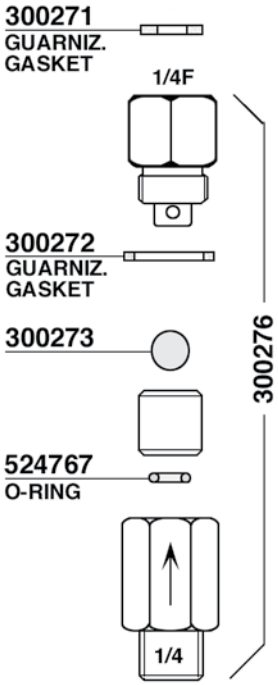
300271
GUARNIZ.
GASKET
1/4F
300272
GUARNIZ.
GASKET
300273
524767
O-RING
1/4
300276

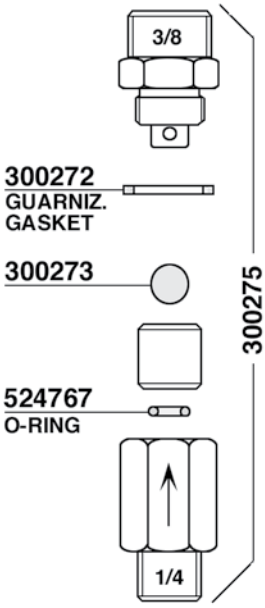
3/8
300272
GUARNIZ.
GASKET
300273
524767
O-RING
1/4
300275

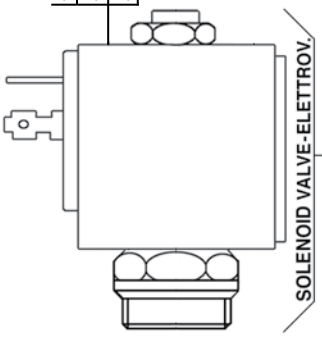
300015 = V220/50/60 BOBINA
300015/11 = V110/60 COIL
300015/24 = V24/50/60 COIL
SOLENOID VALVE-ELETTROV.
300235=V220/50/60
300235/11=V110/60

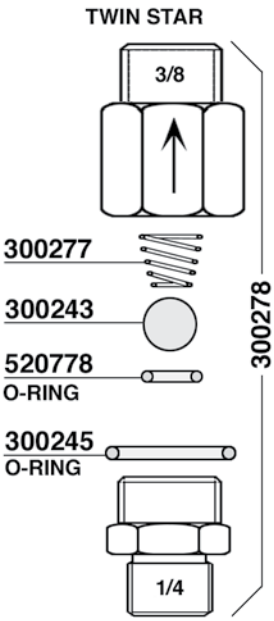
TWIN STAR
3/8
300277
300243
520778
O-RING
300245
O-RING
1/4
300278

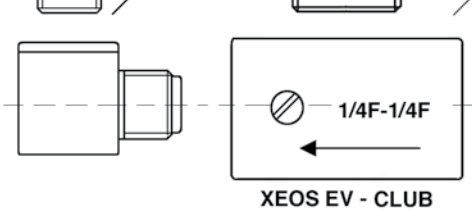
1/4F-1/4F
XEOS EV - CLUB

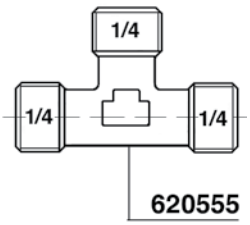
1/4
1/4
1/4
620555

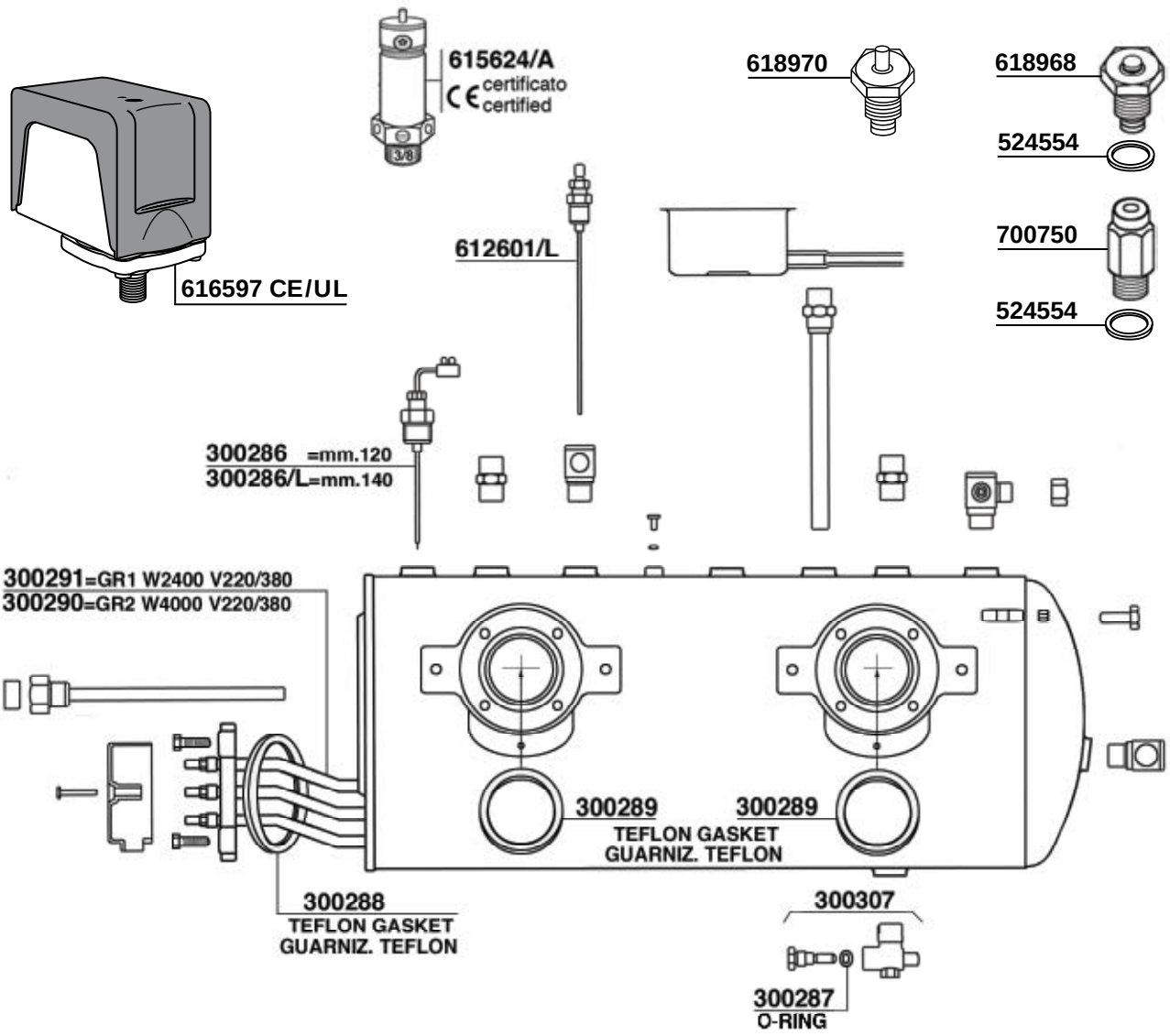

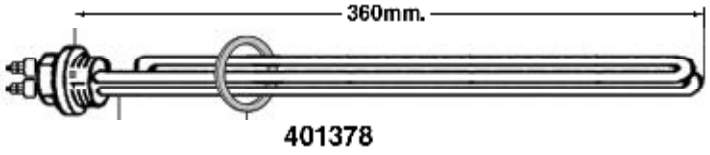

401378

300234=W2500 V220

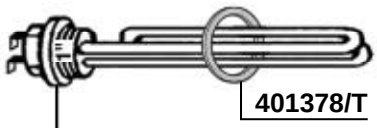

401378/T

401911 220V 1350W 135mm

401912 110V 1350W 135mm

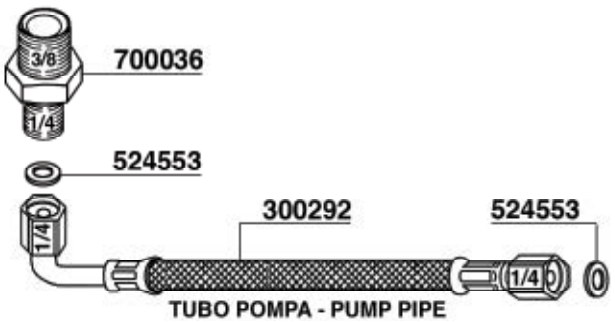

TUBO POMPA - PUMP PIPE

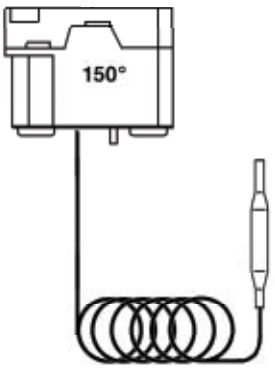

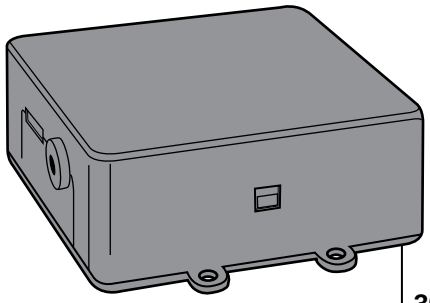

300300 1-2-3GR 220V

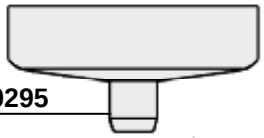

300295

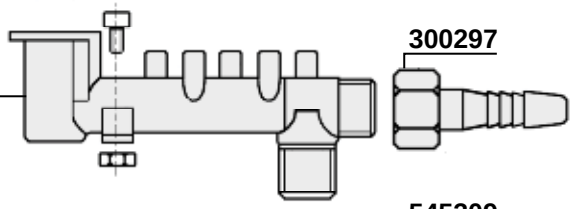

300296

300297

545309

300298

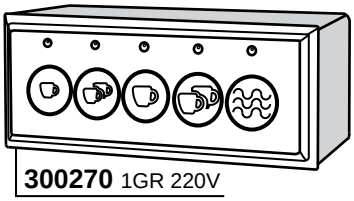

300270 1GR 220V

PULSANTIERA+CENTRALINA CLUB
TOUCH PAD+ELECTRONIC BOX CLUB

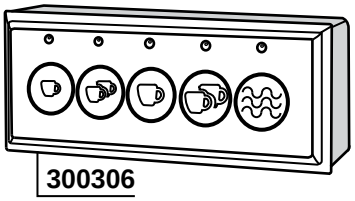

300306

PULSANTIERA CLUB
TOUCH PAD CLUB



530143



617903/G



615978/T



615979

551937

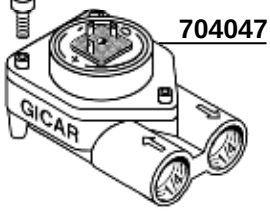

704047

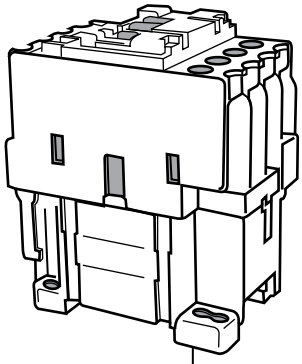

700930 220V
700931 110V

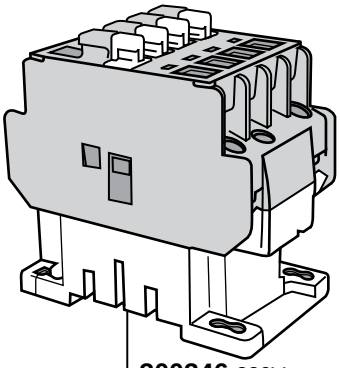

300346 220V
300345 110V

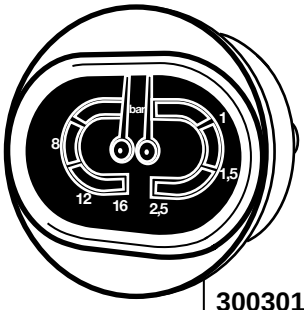

300301
2,5-16 BAR

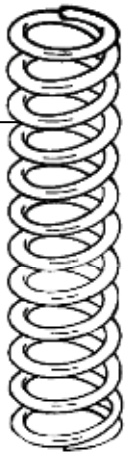

300309
300309/X
STAINLESS STEEL



300319

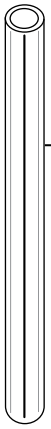

300331
Ø11x185mm



300330
Ø11x145mm



300308
Ø12x186mm



300310



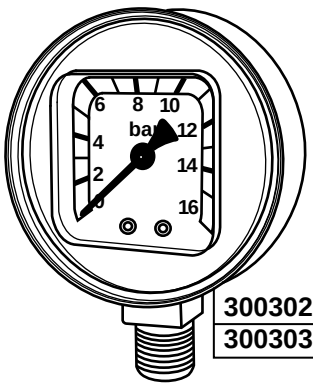

300302 16BAR
300303 3 BAR

300319

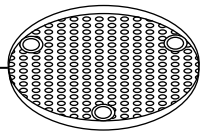

300311
300207

DALLA CORTE

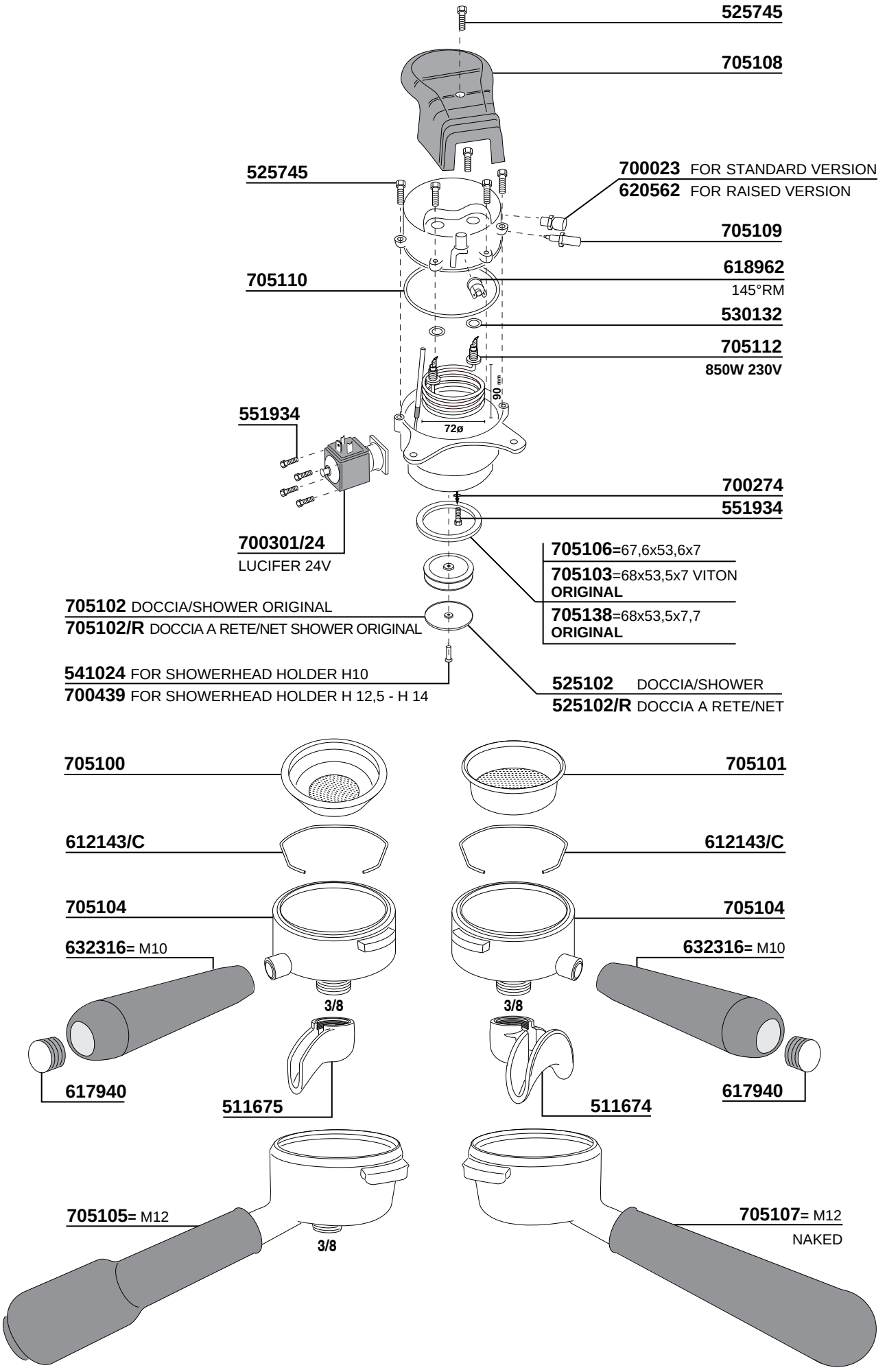
525745
705108
525745
700023 FOR STANDARD VERSION
620562 FOR RAISED VERSION
705109
705110
618962
145°RM
530132
705112
850W 230V
90 mm
72ø
551934
700274
551934
700301/24
LUCIFER 24V
705106=67,6x53,6x7
705103=68x53,5x7 VITON
ORIGINAL
705138=68x53,5x7,7
ORIGINAL
705102 DOCCIA/SHOWER ORIGINAL
705102/R DOCCIA A RETE/NET SHOWER ORIGINAL
541024 FOR SHOWERHEAD HOLDER H10
700439 FOR SHOWERHEAD HOLDER H 12,5 - H 14
525102 DOCCIA/SHOWER
525102/R DOCCIA A RETE/NET
705100
705101
612143/C
612143/C
705104
705104
632316= M10
632316= M10
3/8
3/8
617940
617940
511675
511674
705105= M12
3/8
705107= M12
NAKED

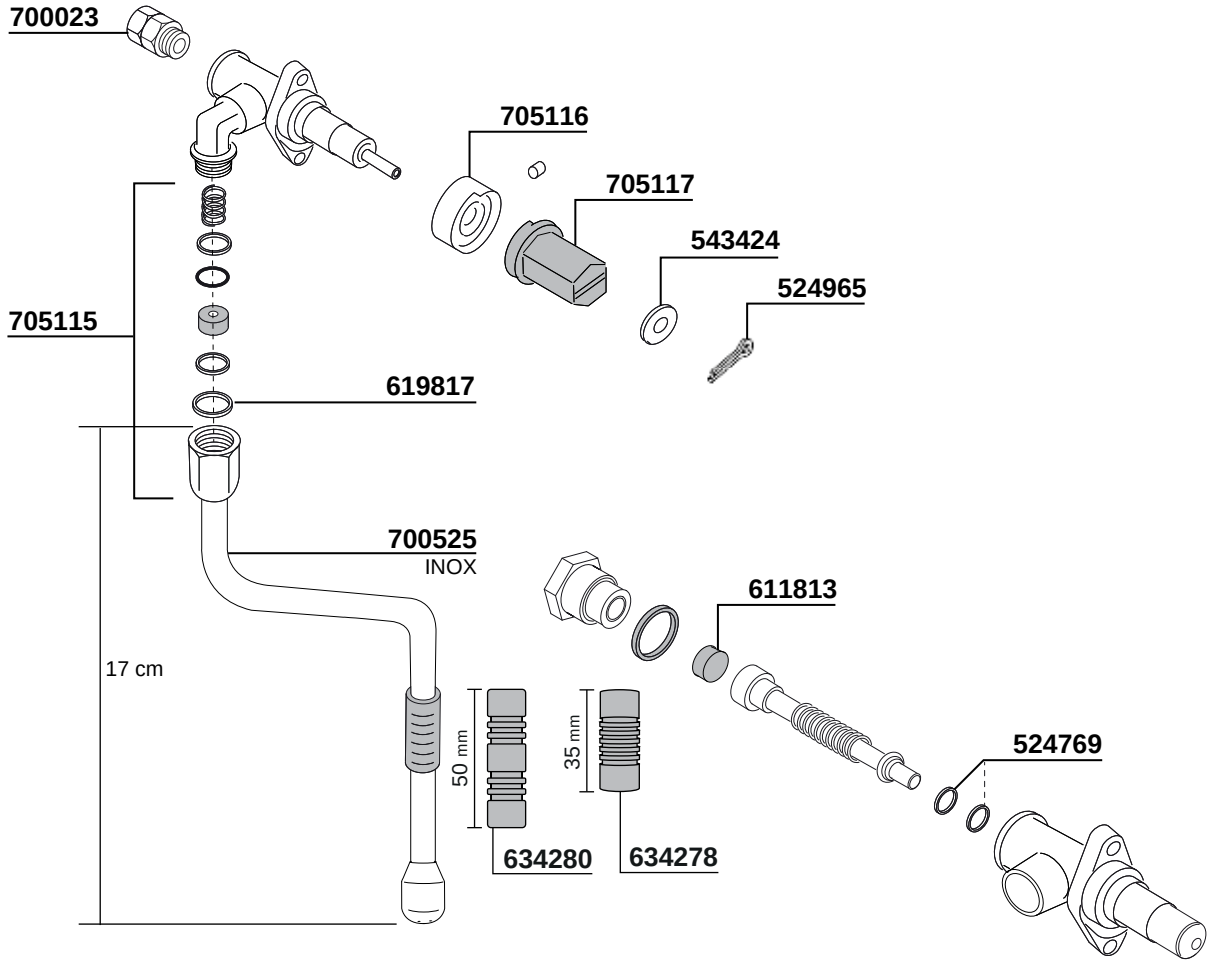
700023
705116
705117
543424
524965
705115
619817
700525
INOX
17 cm
611813
50 mm
35 mm
524769
634280
634278

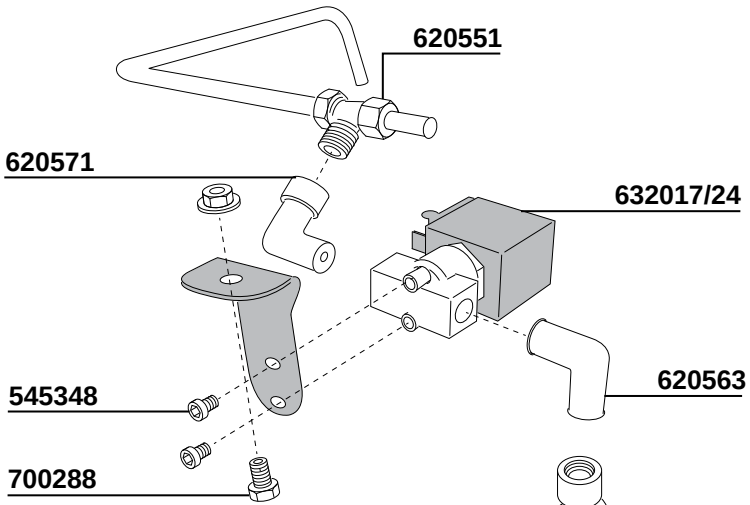
620551
620571
632017/24
620563
545348
700288

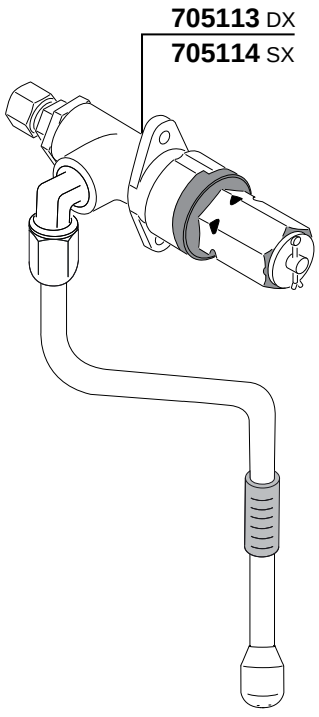
705113 DX
705114 SX

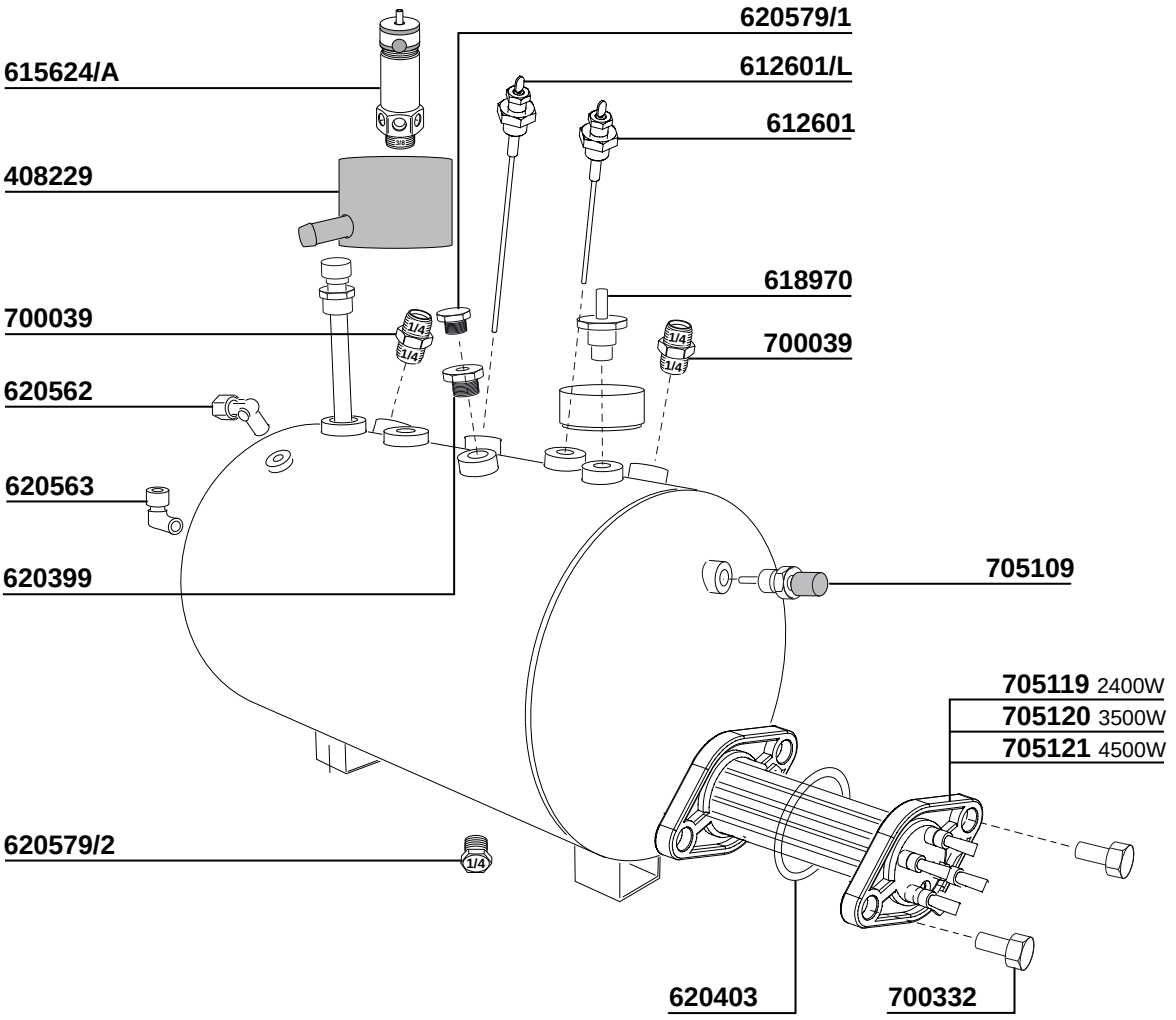
620579/1
615624/A
612601/L
612601
408229
618970
700039
700039
620562
620563
620399
705109
705119 2400W
705120 3500W
705121 4500W
620579/2
620403
700332

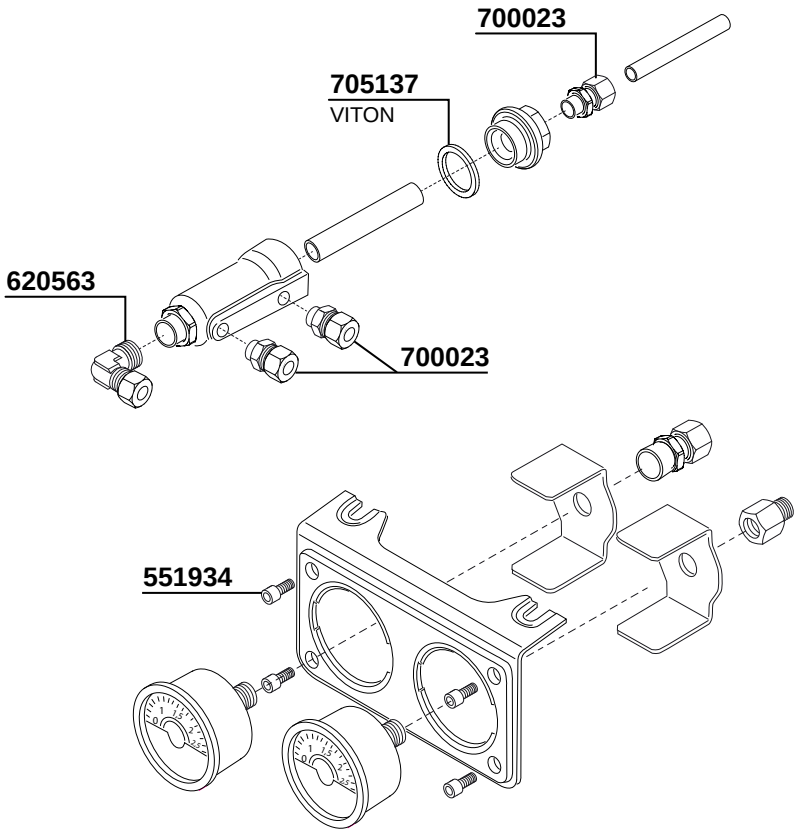
700023
705137
VITON
620563
700023
551934

DALLA CORTE

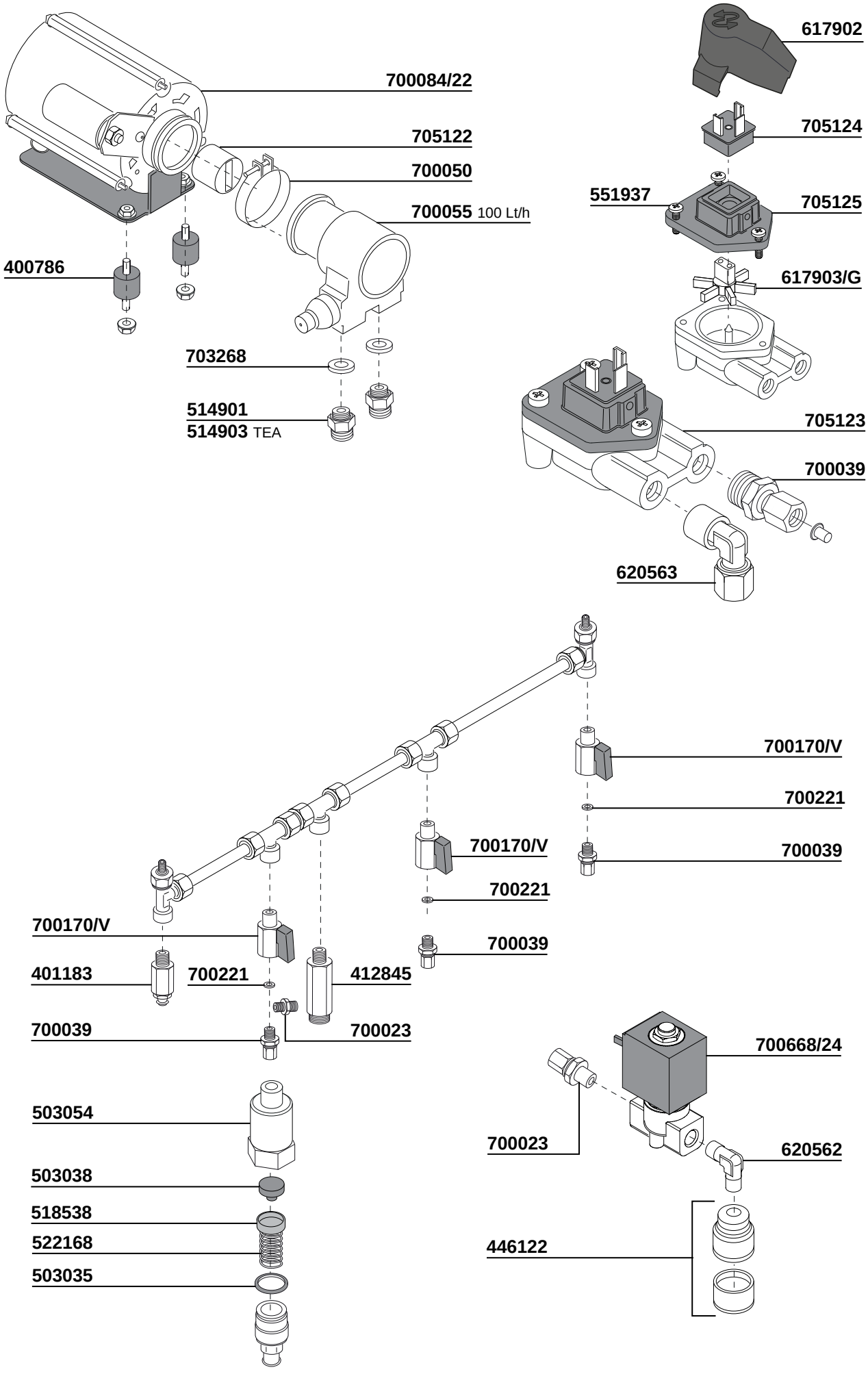
700084/22
705122
700050
700055 100 Lt/h
400786
703268
514901
514903 TEA
617902
705124
551937
705125
617903/G
705123
700039
620563
700170/V
700221
700039
700170/V
700221
700039
700170/V
401183
700221
412845
700039
700023
503054
503038
518538
522168
503035
700668/24
700023
620562
446122

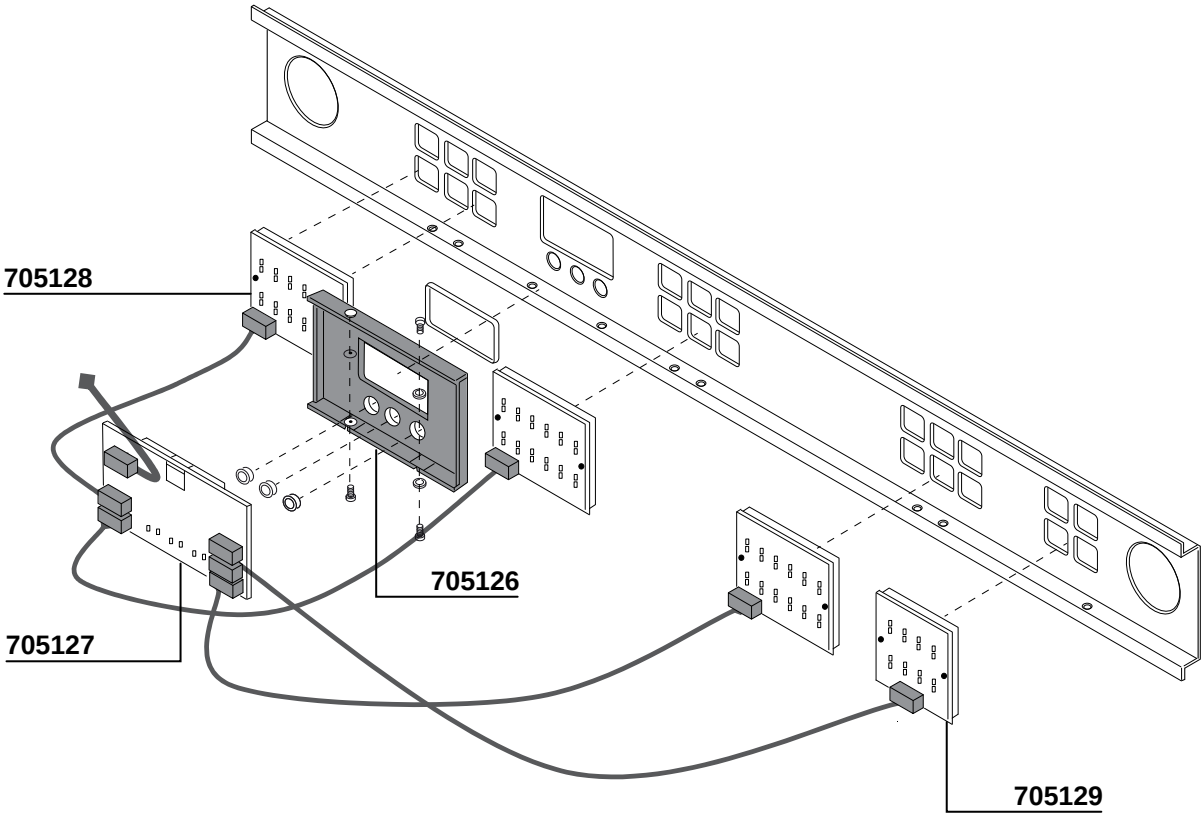
705128
705126
705127
705129

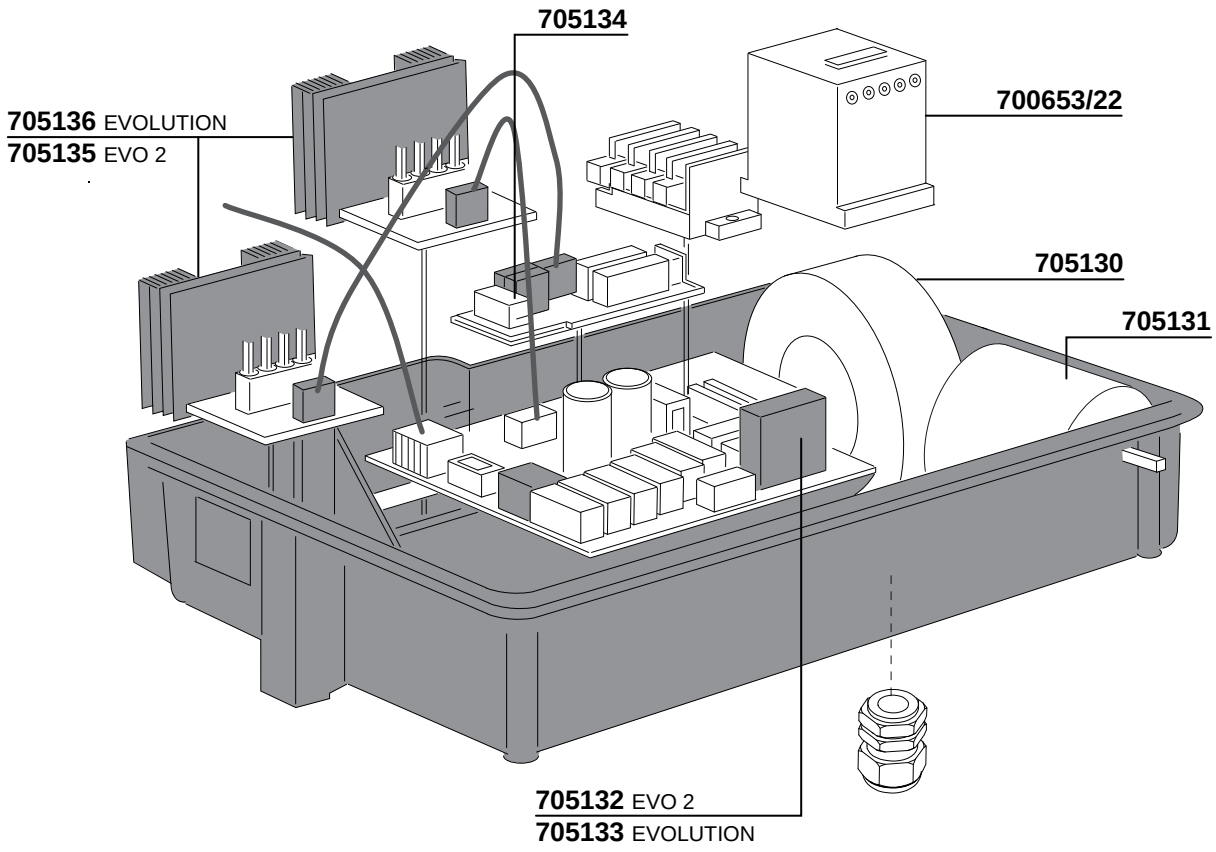
705134
705136 EVOLUTION
705135 EVO 2
700653/22
705130
705131
705132 EVO 2
705133 EVOLUTION

98

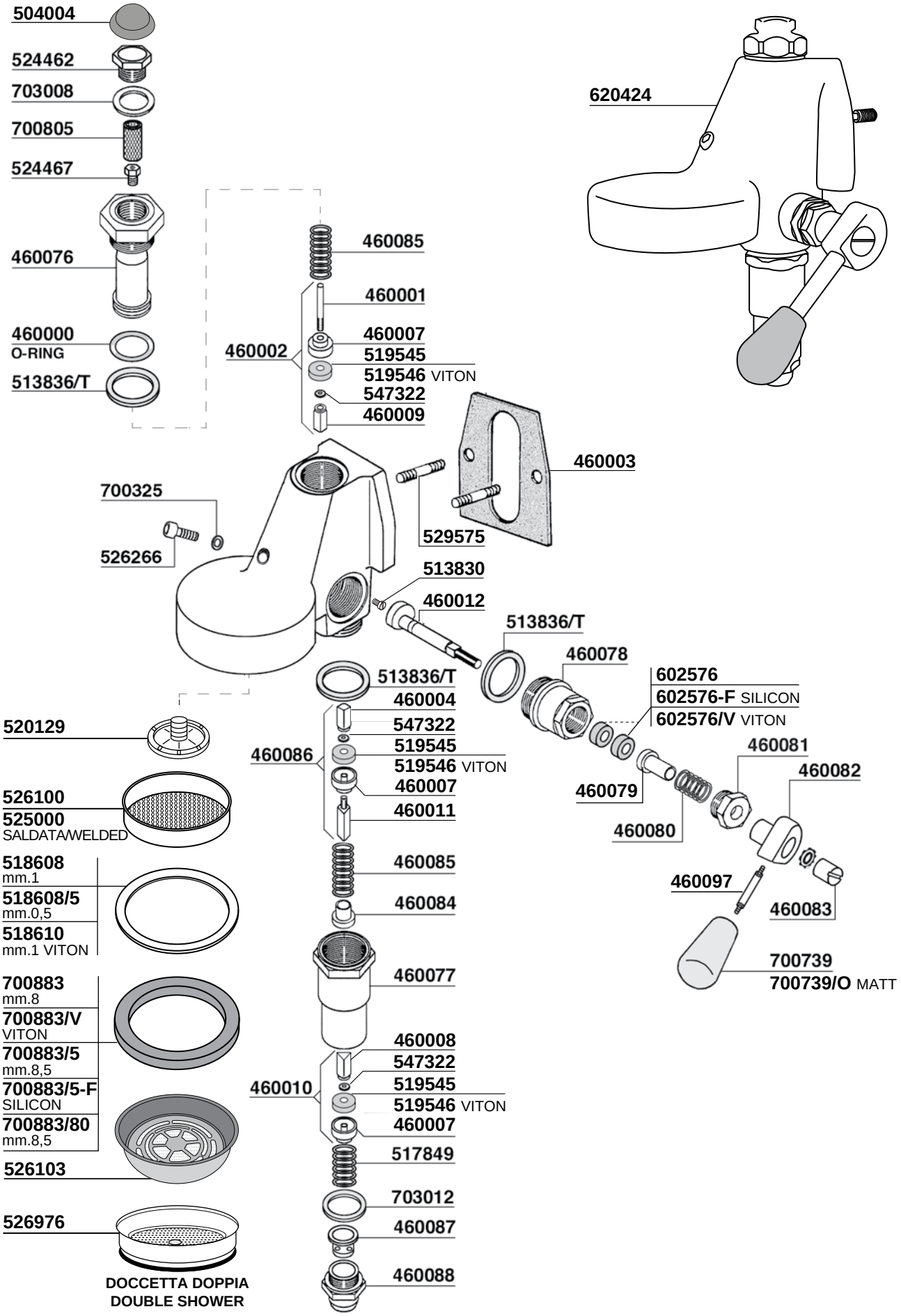
504004
524462
703008
700805
524467
460076
460000
O-RING
513836/T
460085
460001
460002
460007
519545
519546 VITON
547322
460009
620424
460003
700325
526266
529575
513830
460012
513836/T
460078
602576
602576-F SILICON
602576/V VITON
460081
460082
460079
460080
460097
460083
700739
700739/O MATT
520129
526100
525000
SALDATA/WELDED
518608
mm.1
518608/5
mm.0,5
518610
mm.1 VITON
700883
mm.8
700883/V
VITON
700883/5
mm.8,5
700883/5-F
SILICON
700883/80
mm.8,5
526103
526976
DOCCETTA DOPPIA
DOUBLE SHOWER
513836/T
460004
547322
460086
519545
519546 VITON
460007
460011
460085
460084
460077
460008
547322
460010
519545
519546 VITON
460007
517849
703012
460087
460088

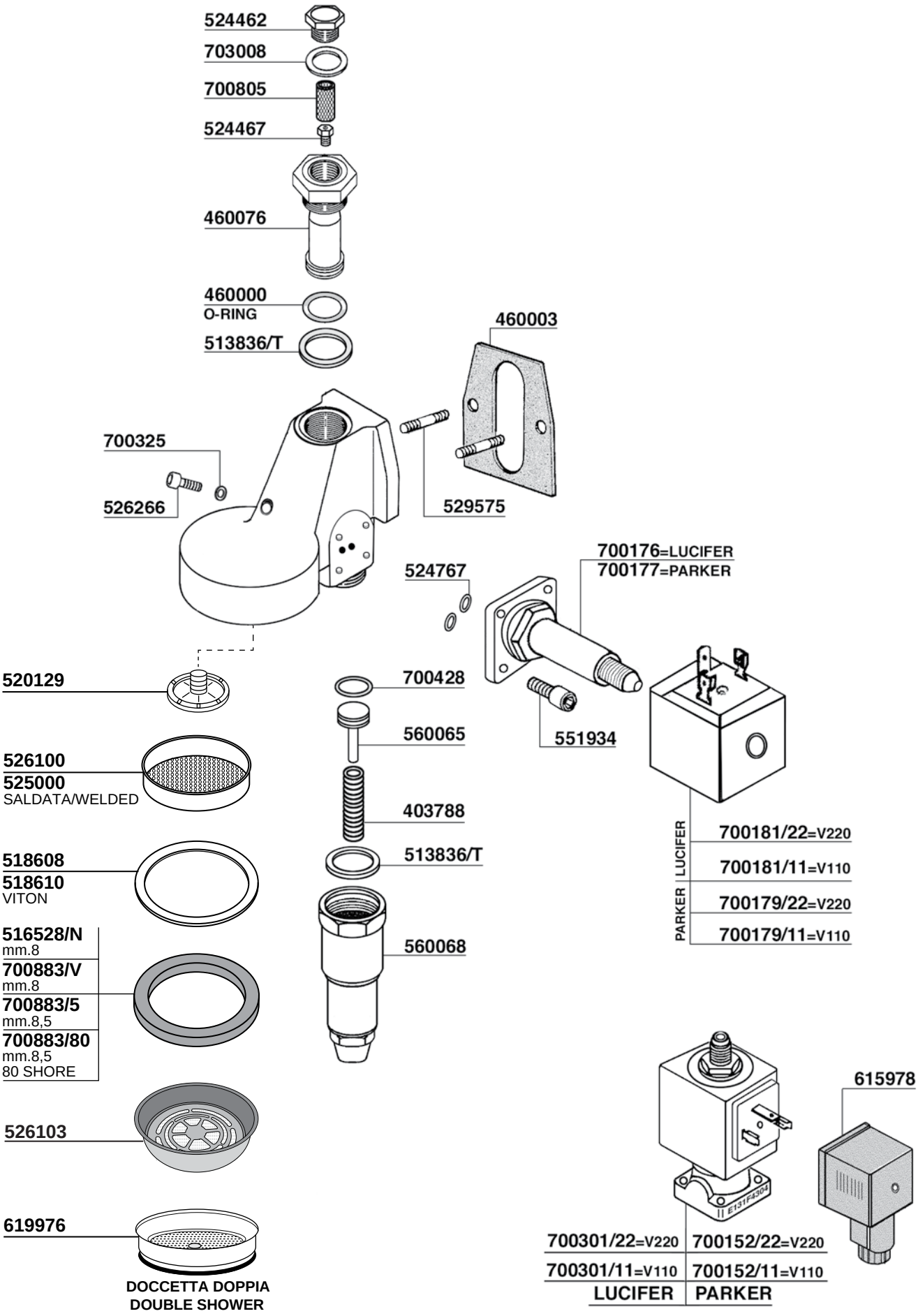
524462
703008
700805
524467
460076
460000
O-RING
513836/T
460003
700325
526266
529575
524767
700176=LUCIFER
700177=PARKER
551934
520129
700428
560065
403788
513836/T
560068
526100
525000
SALDATA/WELDED
518608
518610
VITON
516528/N
mm.8
700883/V
mm.8
700883/5
mm.8,5
700883/80
mm.8,5
80 SHORE
526103
619976
DOCCETTA DOPPIA
DOUBLE SHOWER
LUCIFER
700181/22=V220
700181/11=V110
PARKER
700179/22=V220
700179/11=V110
615978
700301/22=V220
700301/11=V110
LUCIFER
700152/22=V220
700152/11=V110
PARKER

100

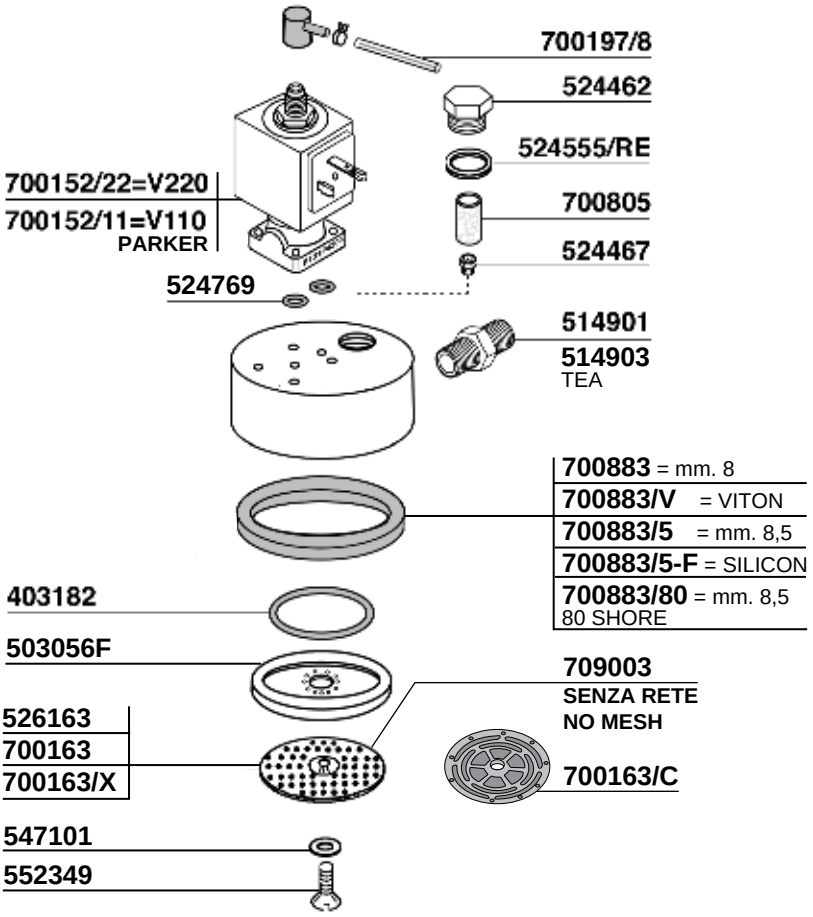



514417 5gr
514418 6gr
521834 6gr
521830 7gr
521835 7gr
521832 8gr
521833 7gr
MICROFORI
MICROHOLES

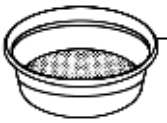

516575 12gr
521998 12gr
521994 14gr
521997 14gr
514419 14gr ridgeless
526208 18gr
526757 21gr
526758 24gr
521996 14gr
MICROFORI
MICROHOLES



521901
521902

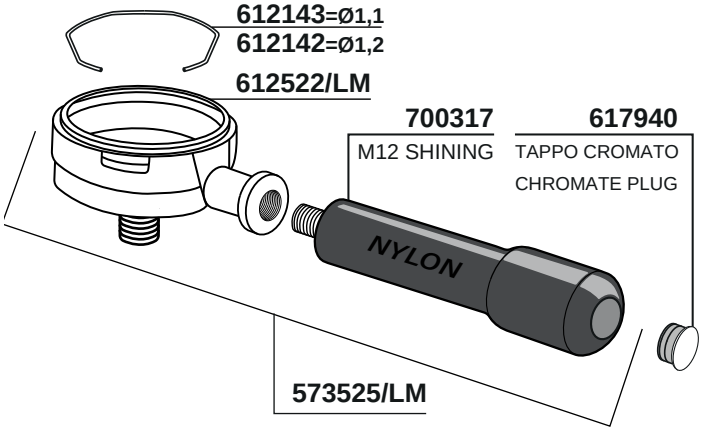
612143=Ø1,1
612142=Ø1,2
612522/LM
700317
M12 SHINING
617940
TAPPO CROMATO
CHROMATE PLUG
NYLON
573525/LM

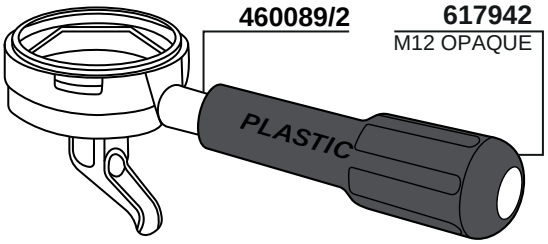
460089/2
617942
M12 OPAQUE
PLASTIC

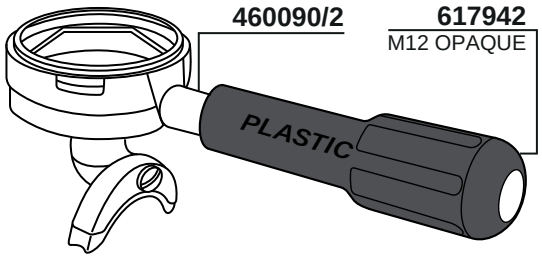
460090/2
617942
M12 OPAQUE
PLASTIC

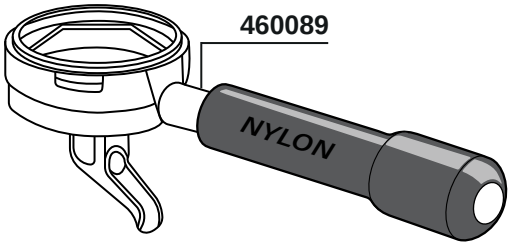
460089
NYLON

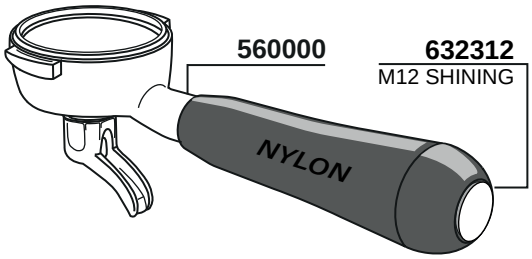
560000
632312
M12 SHINING
NYLON

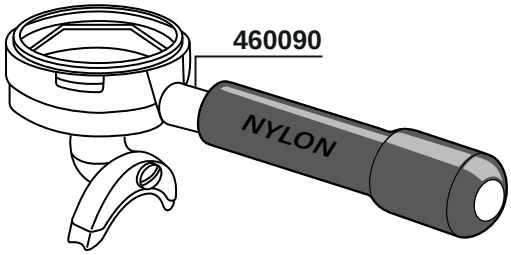
460090
NYLON

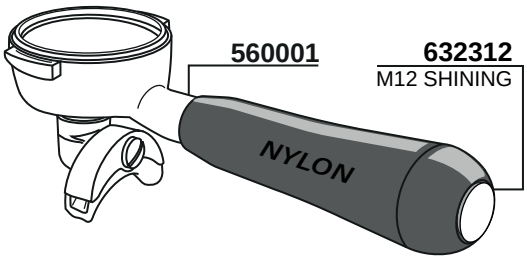
560001
632312
M12 SHINING
NYLON

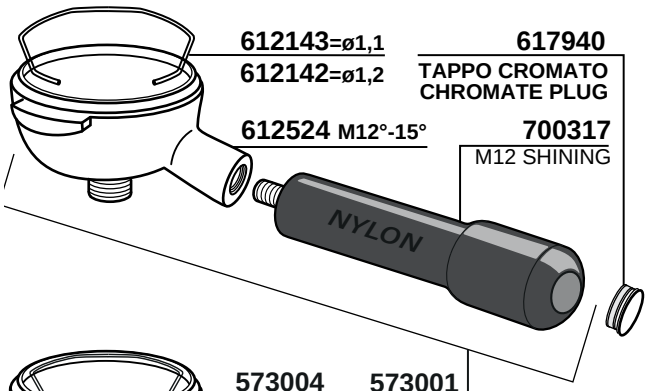
612143=ø1,1
612142=ø1,2
617940
TAPPO CROMATO
CHROMATE PLUG
612524 M12°-15°
700317
M12 SHINING
NYLON

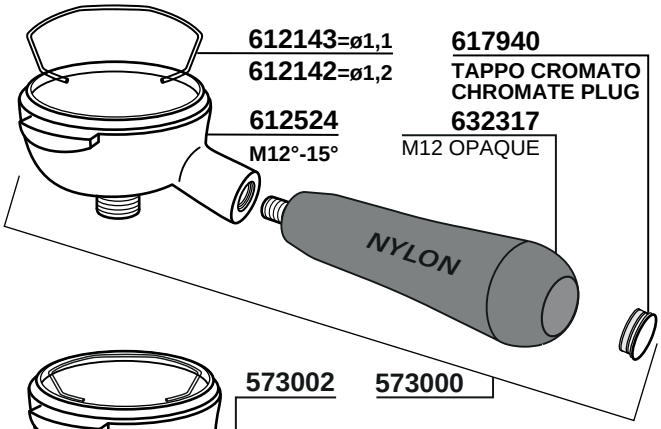
612143=ø1,1
612142=ø1,2
617940
TAPPO CROMATO
CHROMATE PLUG
612524
M12°-15°
632317
M12 OPAQUE
NYLON

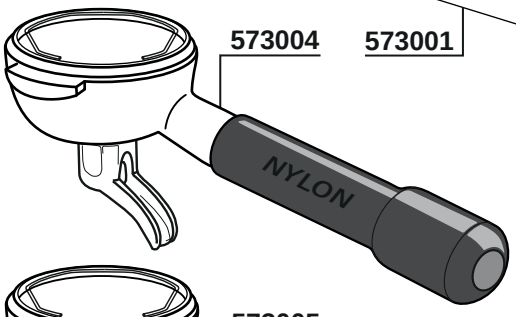
573004
573001
NYLON

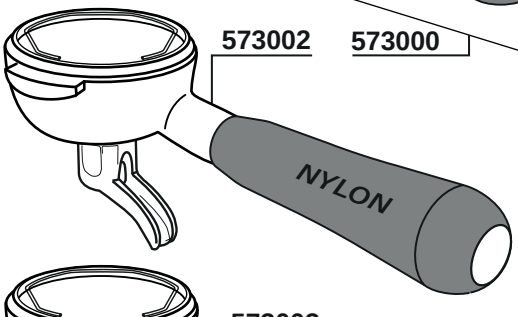
573002
573000
NYLON

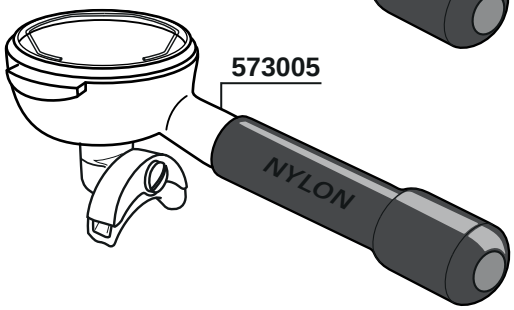
573005
NYLON

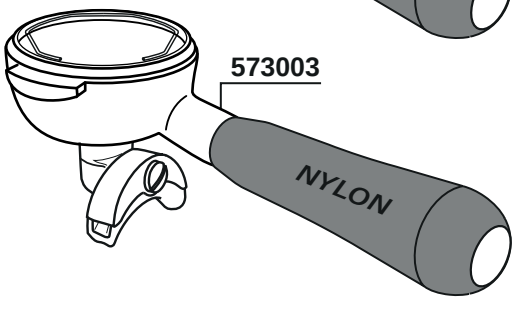
573003
NYLON

102

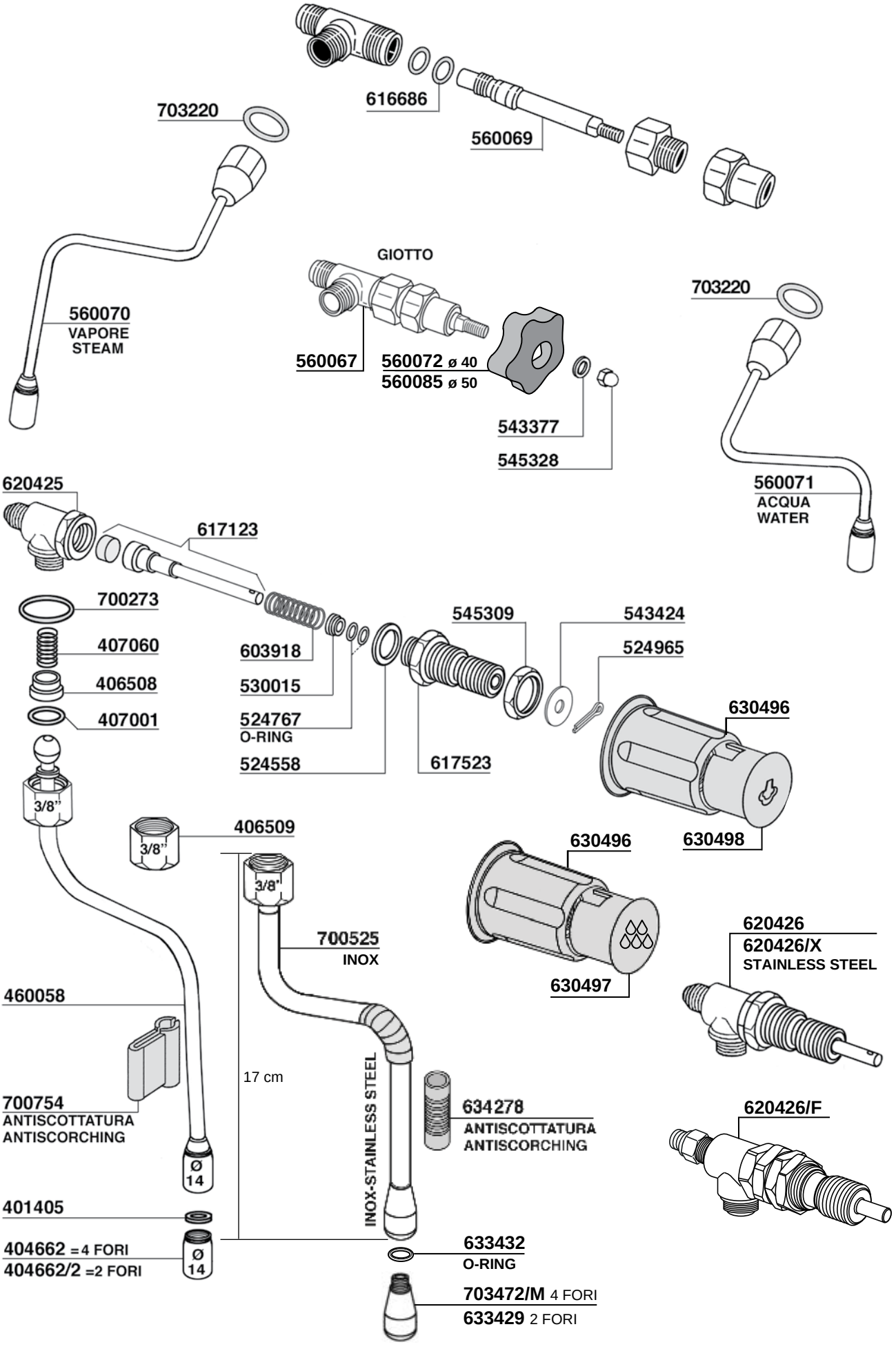
616686
560069
703220
560070
VAPORE
STEAM
GIOTTO
560067
560072 ø 40
560085 ø 50
543377
545328
703220
560071
ACQUA
WATER
620425
617123
700273
407060
406508
407001
603918
530015
524767
O-RING
524558
617523
545309
543424
524965
630496
630498
3/8"
406509
3/8"
3/8"
700525
INOX
630496
630497
620426
620426/X
STAINLESS STEEL
460058
17 cm
700754
ANTISCOTTATURA
ANTISCORCHING
INOX-STAINLESS STEEL
634278
ANTISCOTTATURA
ANTISCORCHING
620426/F
Ø 14
401405
404662 =4 FORI
404662/2 =2 FORI
Ø 14
633432
O-RING
703472/M 4 FORI
633429 2 FORI

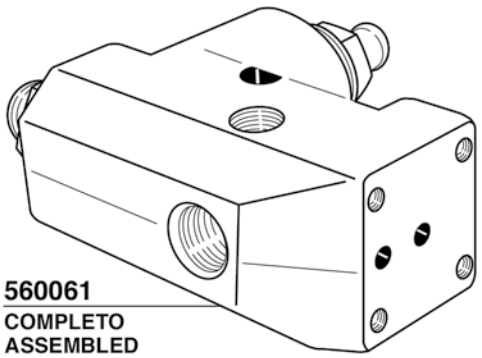

560061
COMPLETO
ASSEMBLED

ELETTROVALVOLA REGOLABILE
ADJUSTABLE SOLENOID VALVE

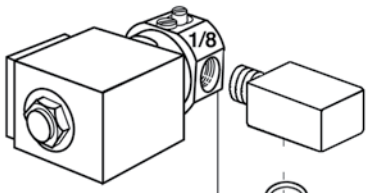

560066 =V220/50/60
560066/11 =V110/60

700023

560075
0-RING

560074

560073

517206

400847

522120

529011/3

700056

700039

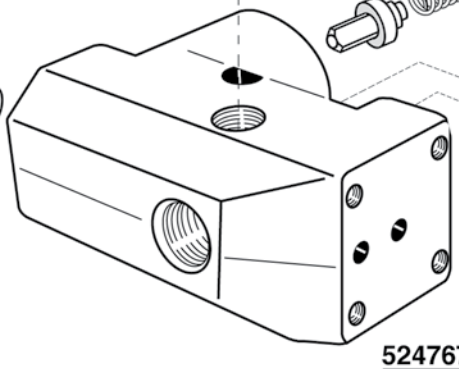

524767

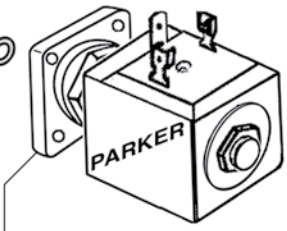

634294/22 =V220/50/60
634294/11 =V110/60

615346 NERO
BLACK

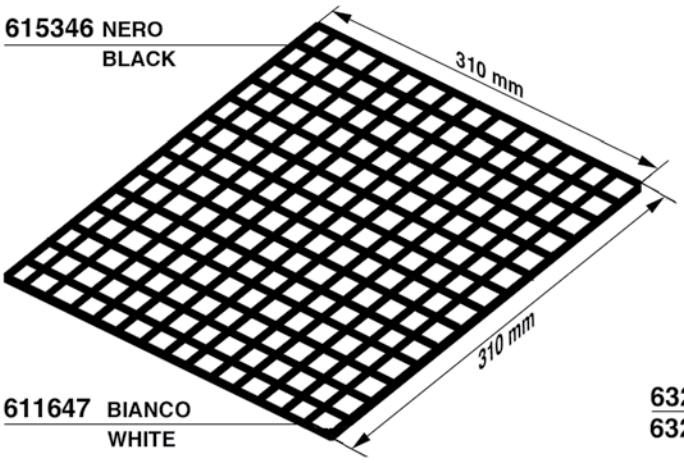

611647 BIANCO
WHITE

632017/22 =V220/50/60
632017/11 = V110/60

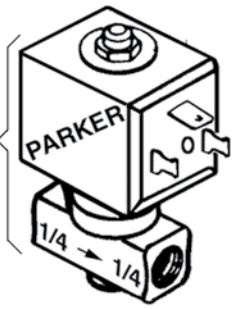

615978

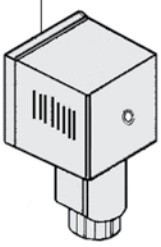

AUTOLIVELLO
AUTOLEVEL

TUBO SCARICO - DRAIN HOSES
PLASTICA NERO - BLACK PLASTIC



560060 = Ø20x24

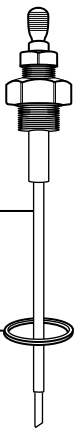

612601 120mm

524554

TUBI INOX - STAINLESS STEEL HOSES
BAR 12 - t.90°

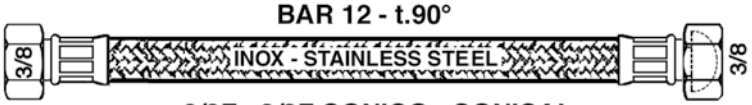

3/8F - 3/8F CONICO - CONICAL

700182= cm.50

700184/S= cm.150

104

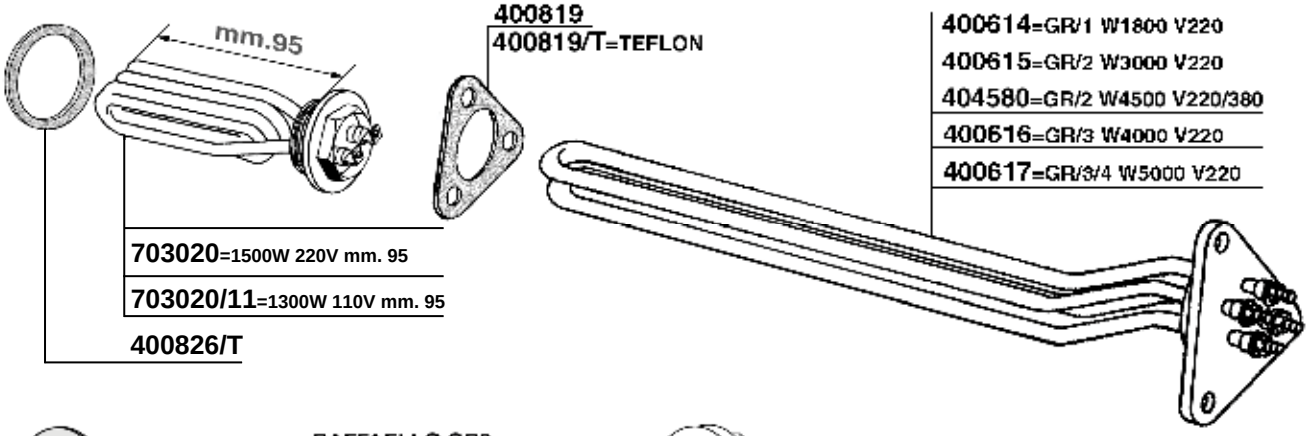
mm.95
400819
400819/T=TEFLON
400614=GR/1 W1800 V220
400615=GR/2 W3000 V220
404580=GR/2 W4500 V220/380
400616=GR/3 W4000 V220
400617=GR/3/4 W5000 V220
703020=1500W 220V mm. 95
703020/11=1300W 110V mm. 95
400826/T


RAFFAELLO GR2
703532=GR2 W3000 V220
400826/T=TEFLON

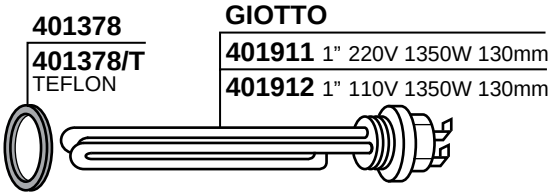
401378
401378/T
TEFLON
GIOTTO
401911 1" 220V 1350W 130mm
401912 1" 110V 1350W 130mm

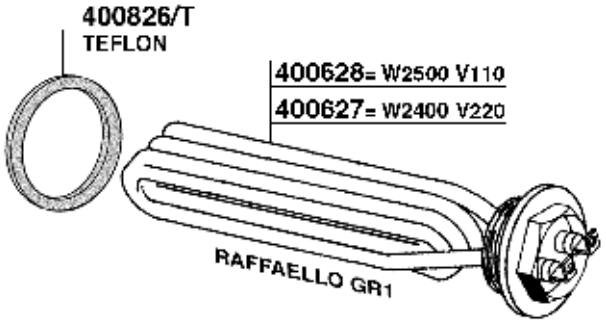
400826/T
TEFLON
400628= W2500 V110
400627= W2400 V220
RAFFAELLO GR1

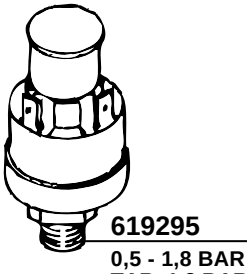
619295
0,5 - 1,8 BAR
TAR. 1,2 BAR

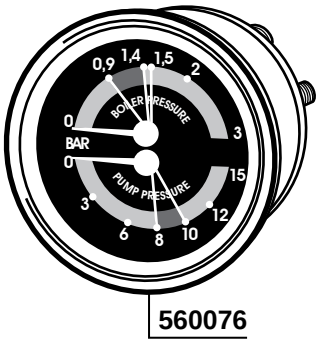
BOILER PRESSURE
PUMP PRESSURE
BAR
560076

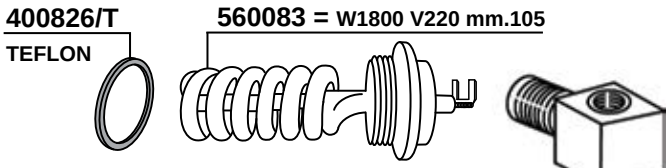
400826/T
TEFLON
560083 = W1800 V220 mm.105

700269
O-RING
400088
703221
Ø11x155mm
400813
615624/A
certificato
certified
700217
3/8
524555
618970
618968
524554
700750
524554

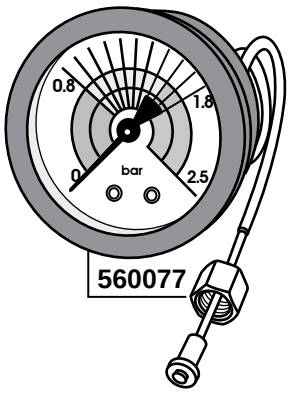
bar
560077

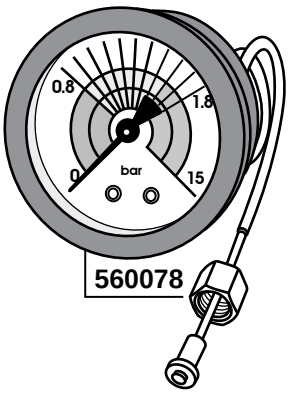
bar
560078

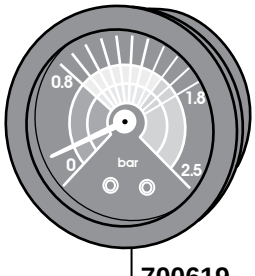
bar
700619
BOILER

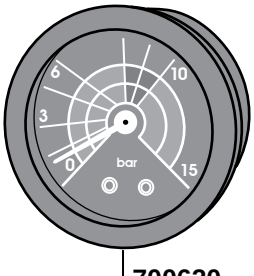
bar
700620
PUMP

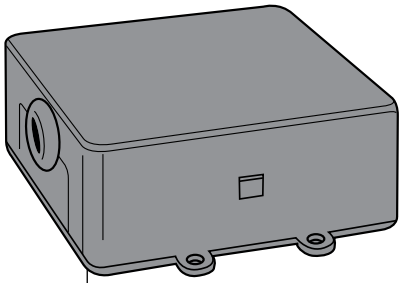

560063
CENTRALINA GR2/3 V230/50/60
GICAR CODE 9.5.2202G 07

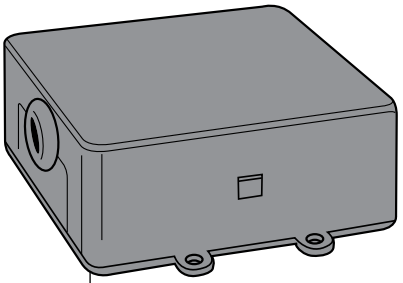

560079
CENTRALINA GR2/3 V230/50/60
GICAR CODE 9.5.25.20G 00

560084
VIVALDI / RAFFAELLO
GICAR CODE 9.9.08.82G

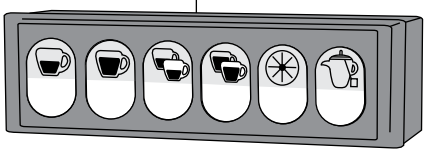

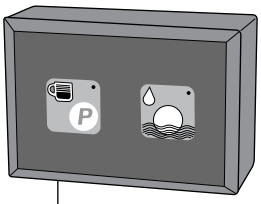

560086
RAFFAELLO
GICAR CODE 9.9.09.01G

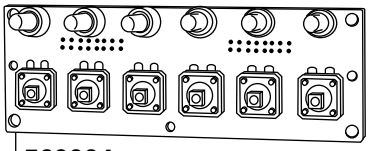

560064
PULSANTIERA VENEZIANO GR2/3
GICAR CODE 9.9.11.99G

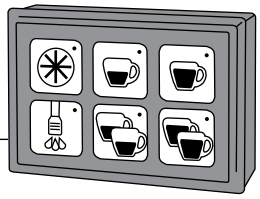

620705
GICAR CODE 9.9.09.28

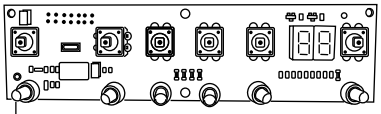

620735
GICAR CODE 9.9.08.01G

8 PIN DOPPI
8 DOUBLE PINS

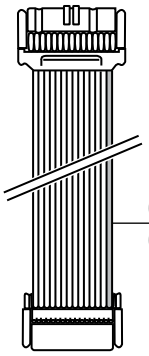

620705/A 16 PIN
RAFFAELLO / MICHELANGELO
GICAR CODE 9.9.09.25G

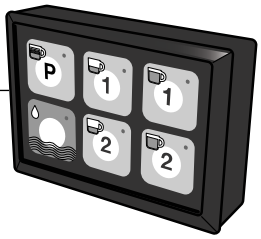

620707 800 mm
620716 1000 mm

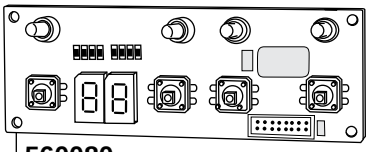

560080
PULSANTIERA P4
CROMO MICHELANGELO
GICAR CODE 9.9.09.48G

620748
GICAR CODE 8.9.48.76

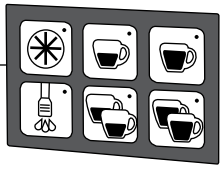

551937
530148
617903/G
615978/T
615979
620405

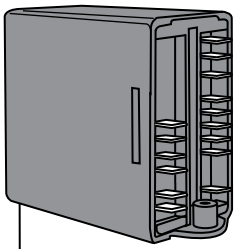

560087 230V
CELLINI
GICAR CODE 9.9.04.76G

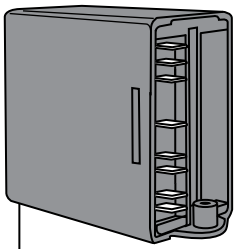

CENTRALINA AUTOLIVELLO
AUTOFILL ELECTRONIC BOX
560062/11 110V
GICAR CODE 9.9.04.77G

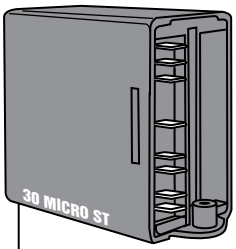

560081 110V
GICAR CODE 9.1.04.57G
560082 230/240V - 50/60 Hz
GICAR CODE 9.1.40.56G

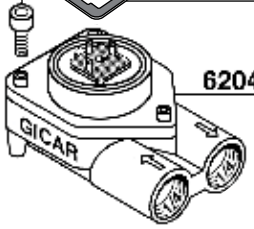

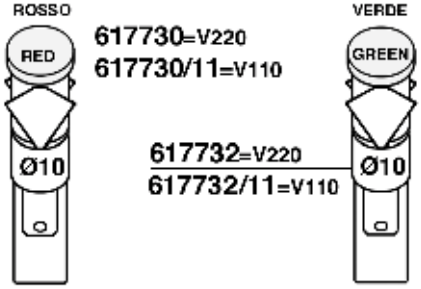

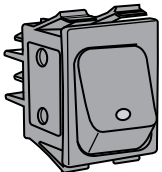

579671
NERO/BLACK

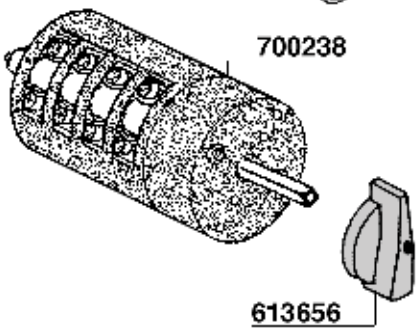

700238

613656

SYNCHRONIKA - TECHNIKA IV - MECHANIKA IV

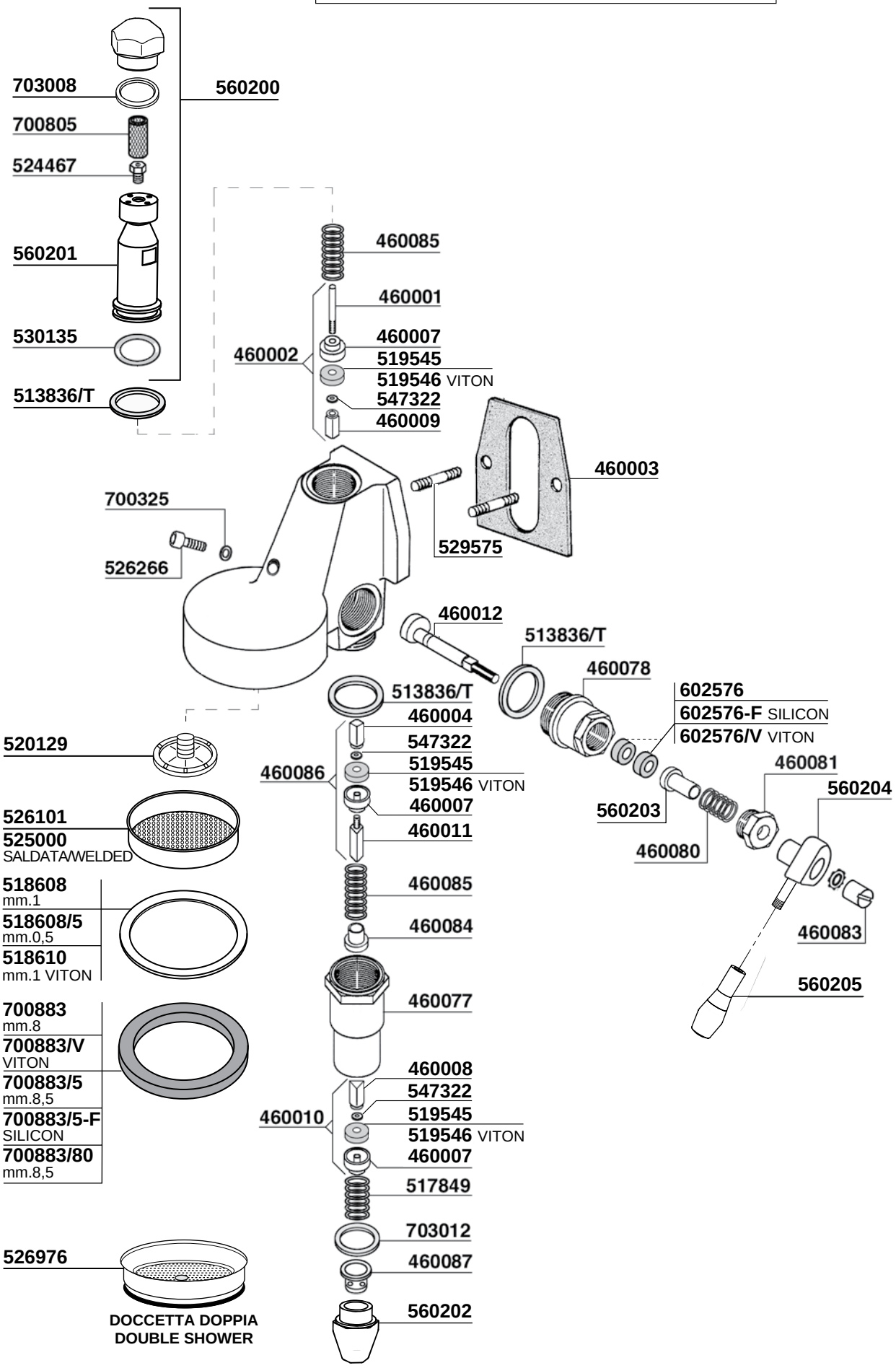

ELEKTRONIKA II

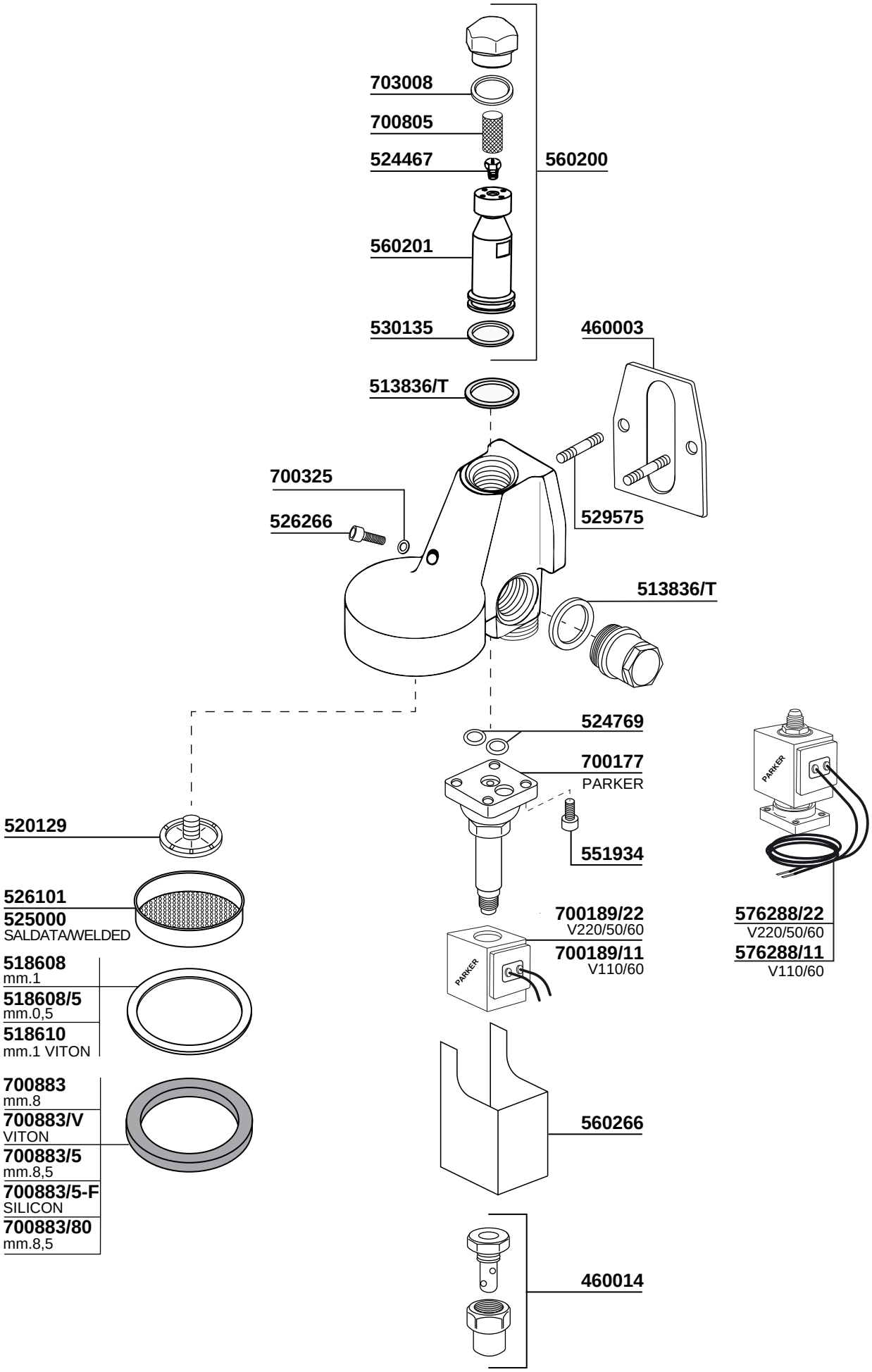

SYNCHRONIKA - TECHNIKA IV
MECHANIKA IV - ELEKTRONIKA II

514417 5gr
514418 6gr
526418 6gr
521834 6gr
521830 7gr
521835 7gr
521832 8gr
521833 7gr
MICROFORI
MICROHOLES

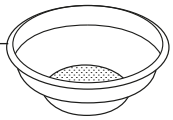

516575 12gr
521998 12gr
521994 14gr
521997 14gr
514419 14gr
ridgeless
526208 18gr
526757 21gr
300059 21gr
526758 24gr
521996 14gr
MICROFORI
MICROHOLES

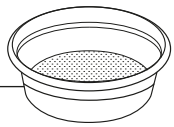

521901
521902

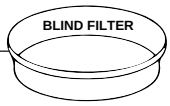

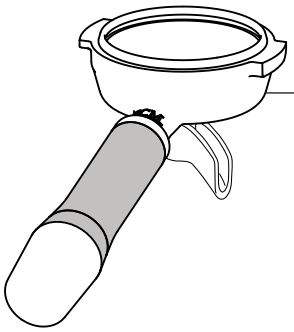

560206
ORIGINAL

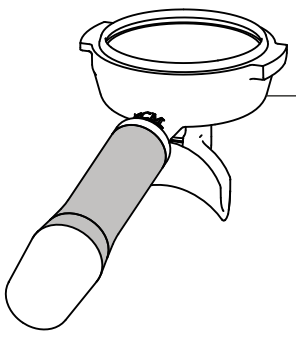

560207
ORIGINAL



612143 Ø1,1 mm
612142 Ø1,2 mm

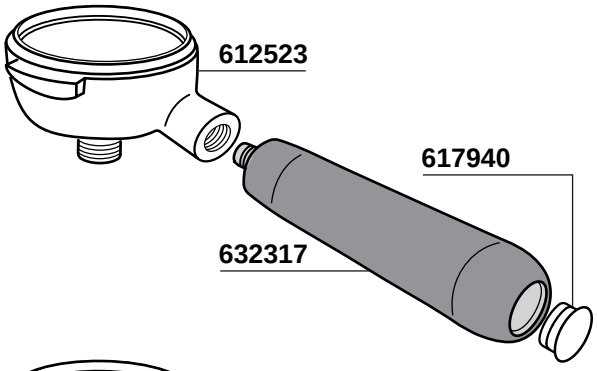

612523
617940
632317

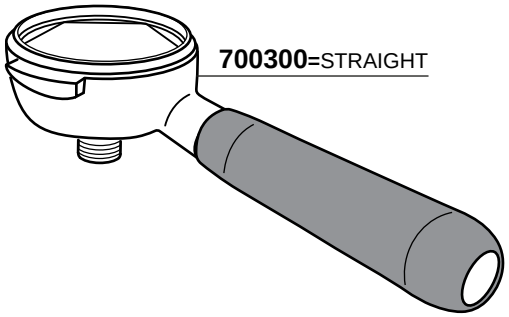

700300=STRAIGHT

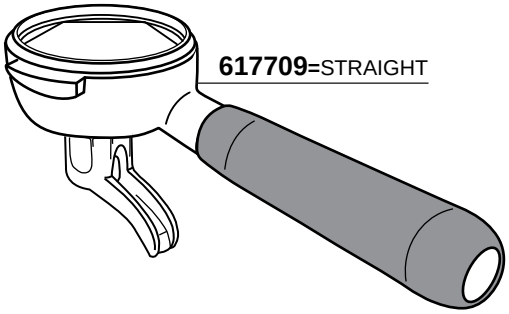

617709=STRAIGHT

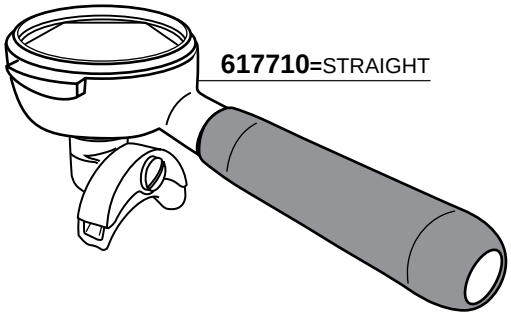

617710=STRAIGHT



511675

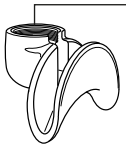

511674

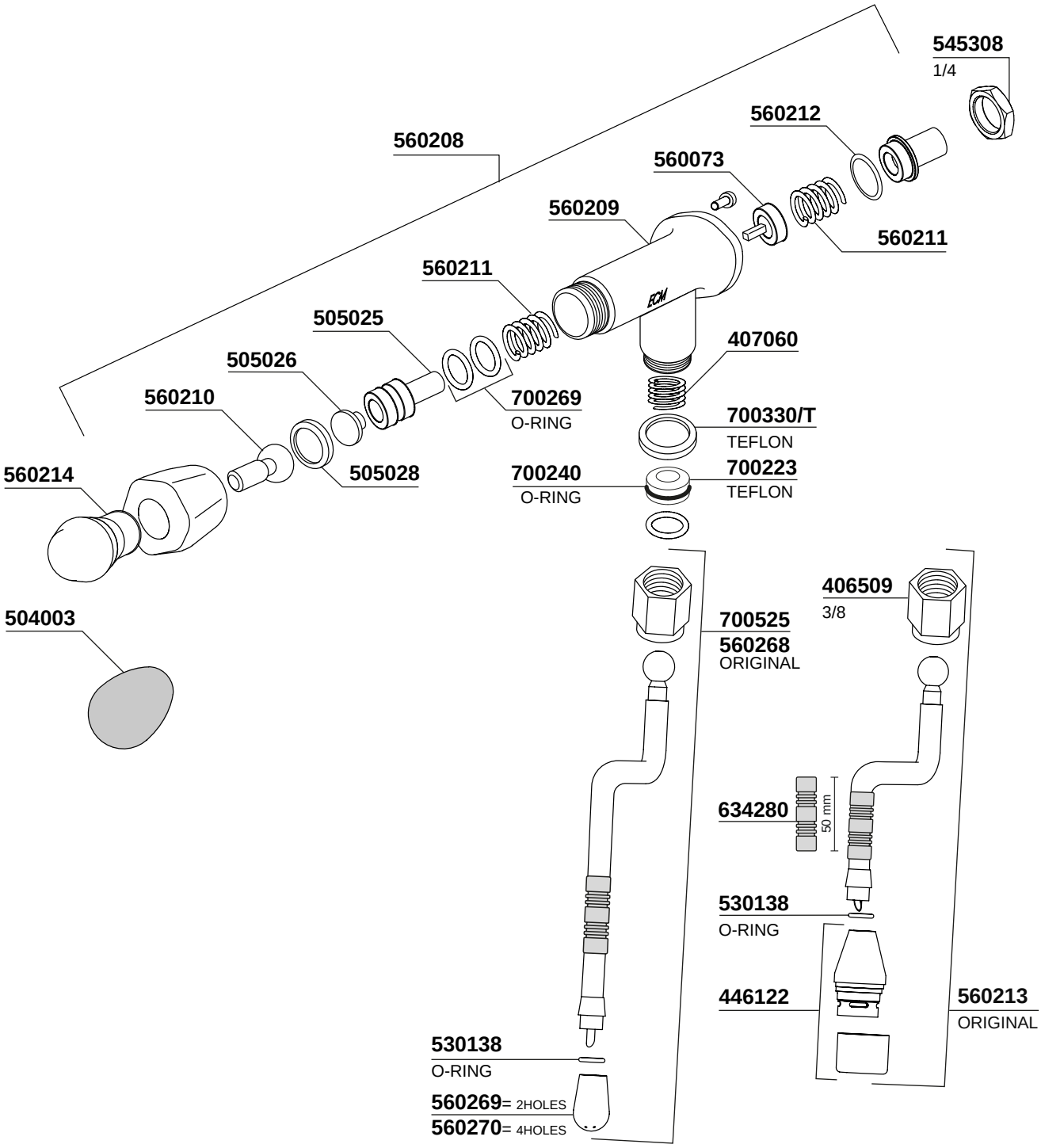
545308
1/4
560212
560208
560073
560209
560211
560211
505025
505026
560210
700269
O-RING
407060
700330/T
TEFLON
560214
505028
700240
O-RING
700223
TEFLON
406509
3/8
504003
700525
560268
ORIGINAL
634280
50 mm
530138
O-RING
446122
560213
ORIGINAL
530138
O-RING
560269= 2HOLES
560270= 4HOLES

TECHNIKA IV
MECHANIKA IV
ELEKTRONIKA II

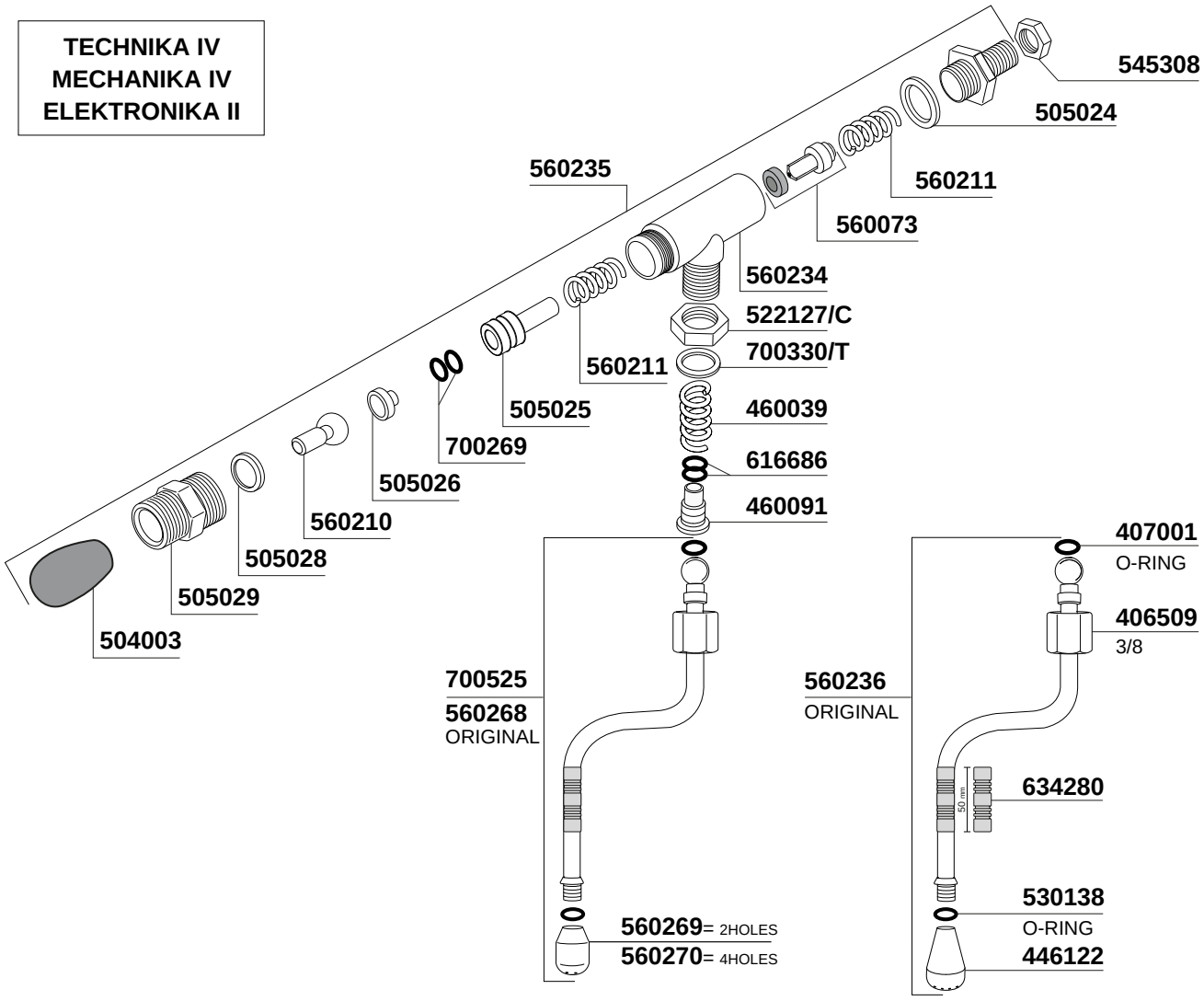

TECHNIKA IV
MECHANIKA IV

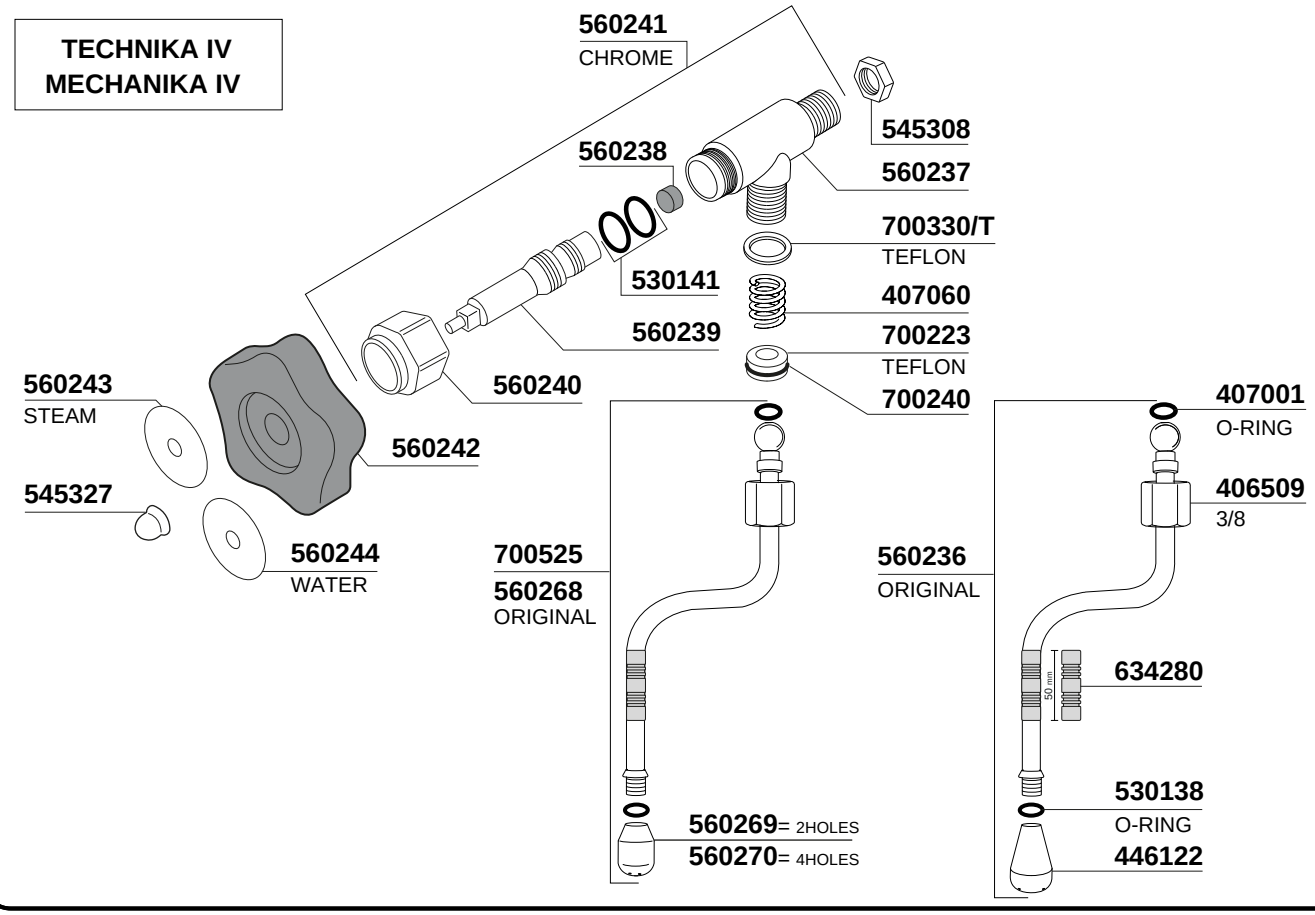

SYNCHRONIKA

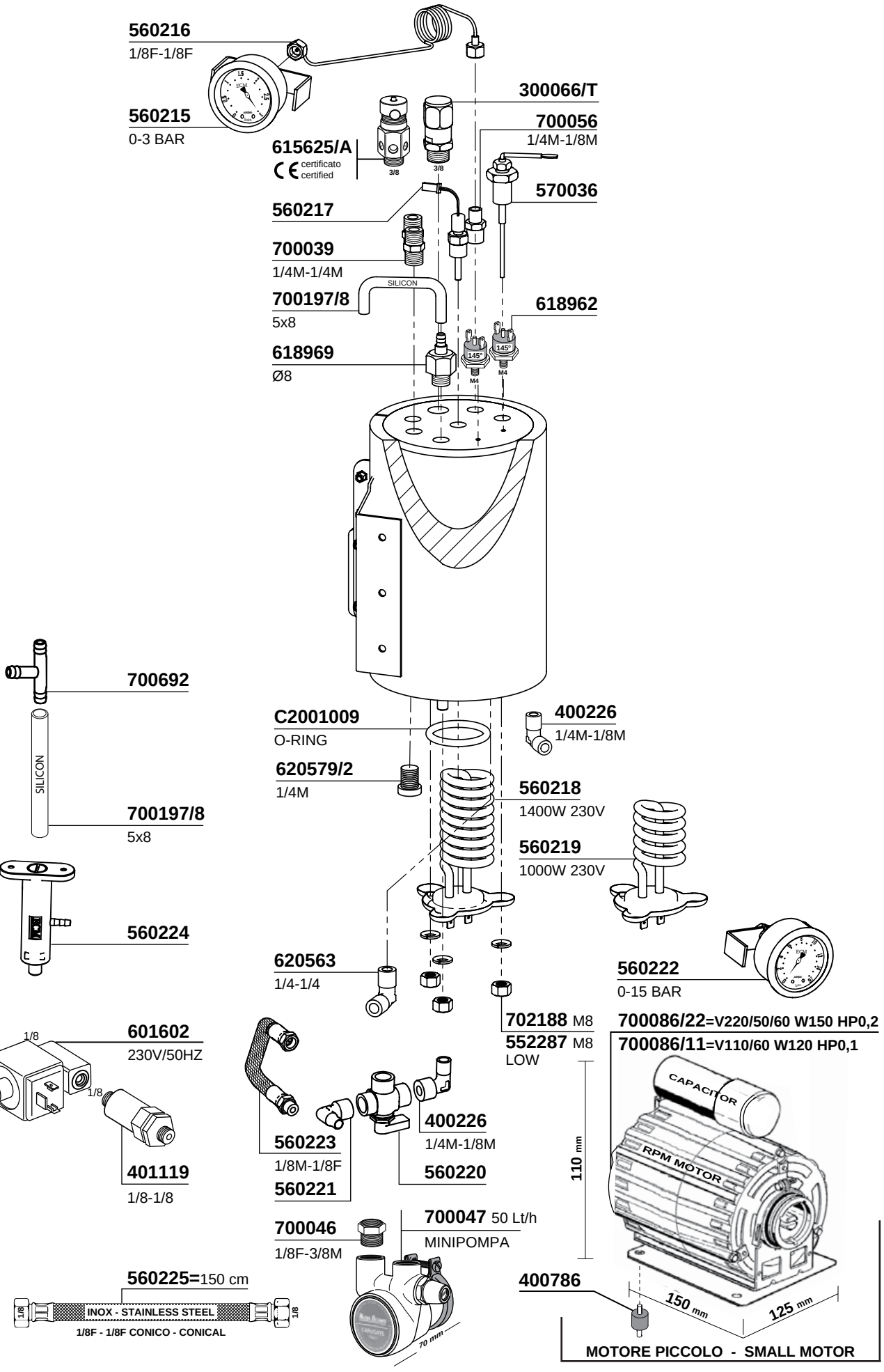

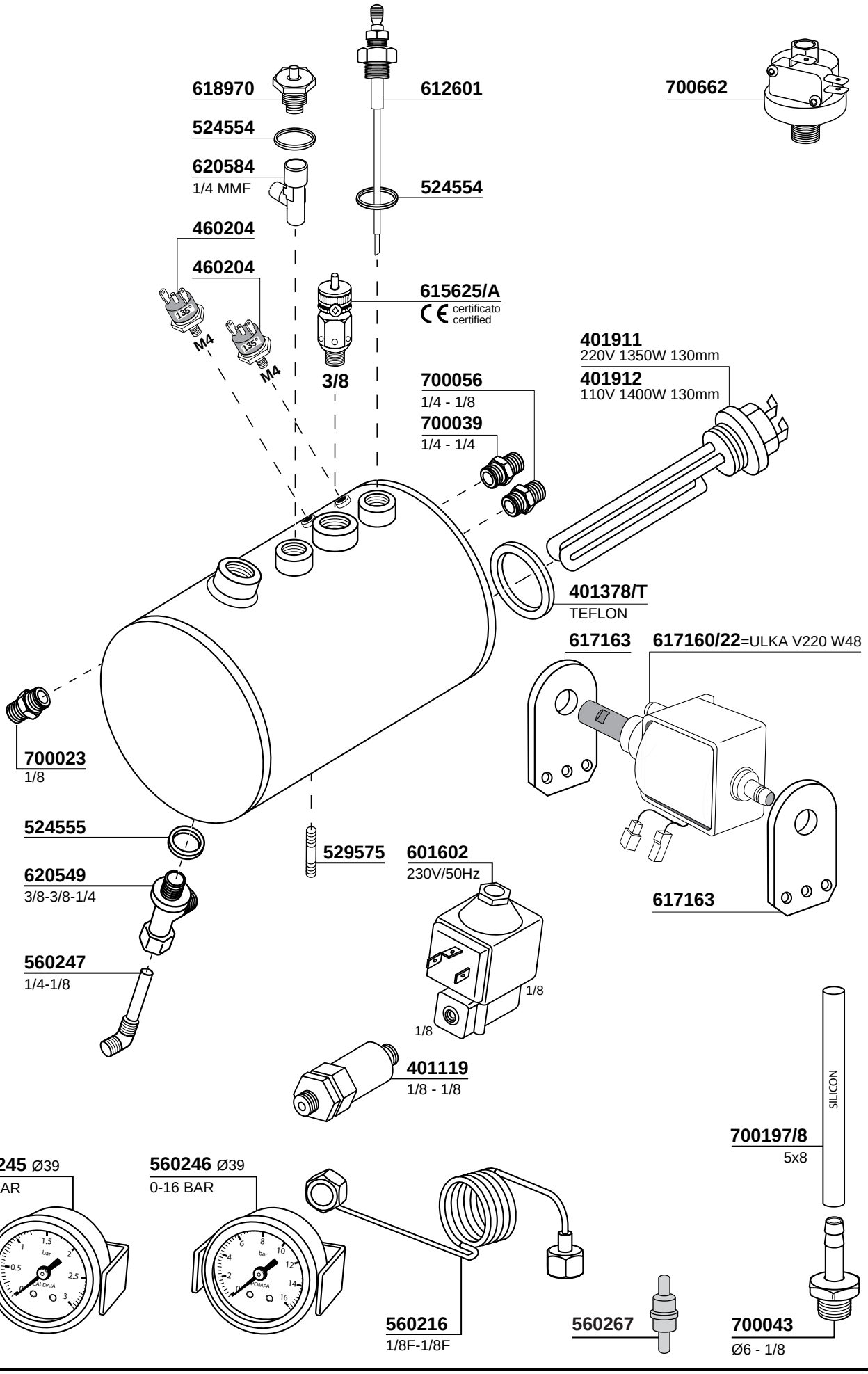
618970
524554
620584
1/4 MMF
460204
460204
612601
524554
615625/A
CE certificato certified
3/8
700662
401911
220V 1350W 130mm
401912
110V 1400W 130mm
700056
1/4 - 1/8
700039
1/4 - 1/4
401378/T
TEFLON
617163
617160/22=ULKA V220 W48
617163
700023
1/8
524555
620549
3/8-3/8-1/4
560247
1/4-1/8
529575
601602
230V/50Hz
1/8
1/8
401119
1/8 - 1/8
SILICON
700197/8
5x8
560245 Ø39
0-3 BAR
560246 Ø39
0-16 BAR
560216
1/8F-1/8F
560267
700043
Ø6 - 1/8

ELEKTRONIKA II

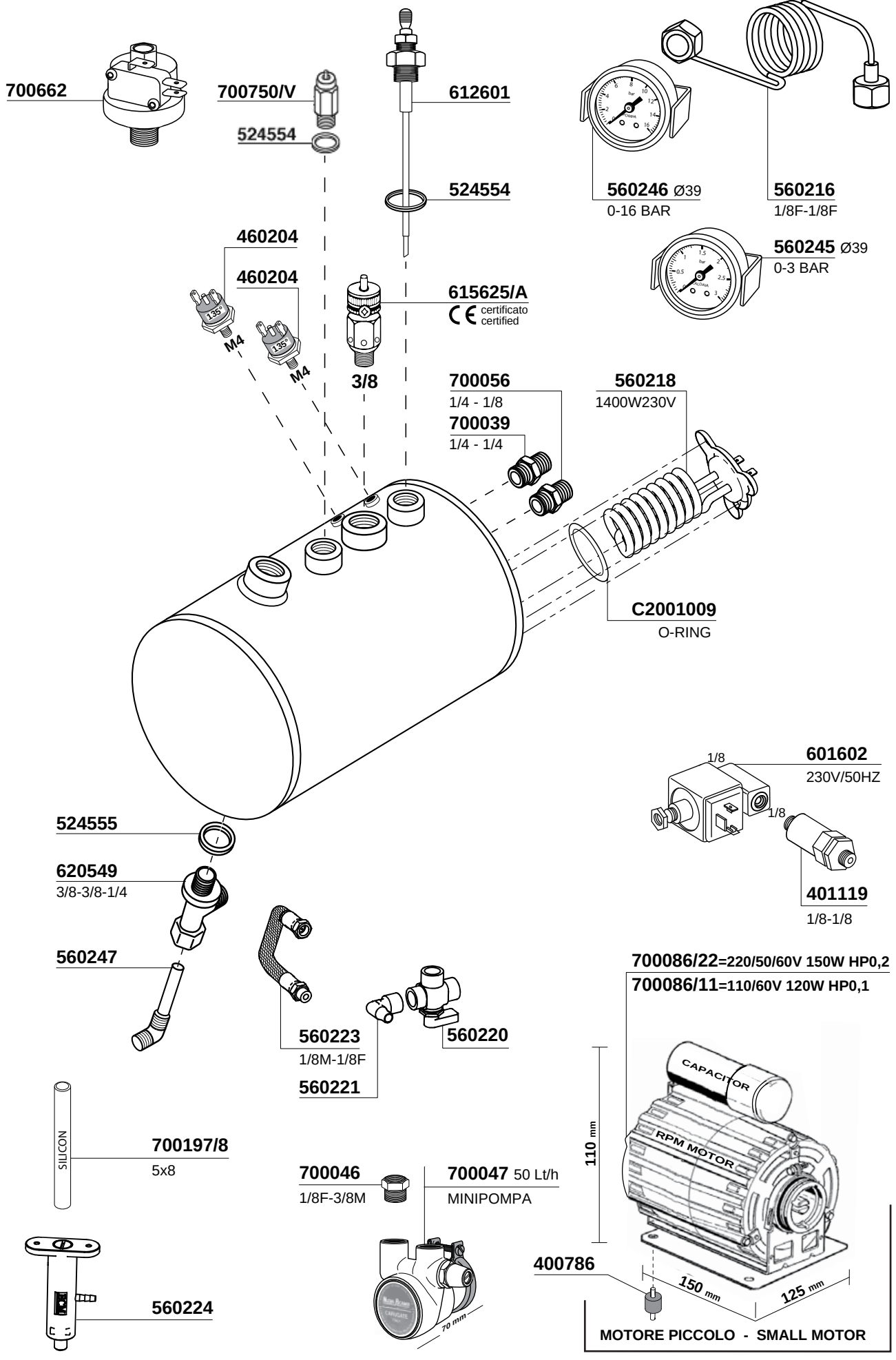

SYNCHRONIKA - TECNIKA IV
MECHANIKA IV - ELEKTRONIKA II

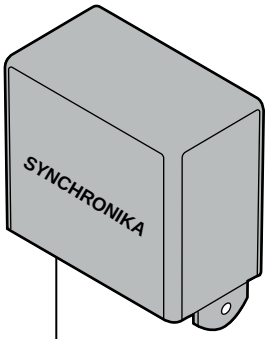

560226= 220V-240V
560227= 115V

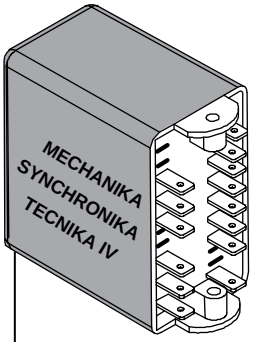

560228= 240V
GICAR CODE 9.9.36.12G

560229= 115V
GICAR CODE 9.9.36.04G

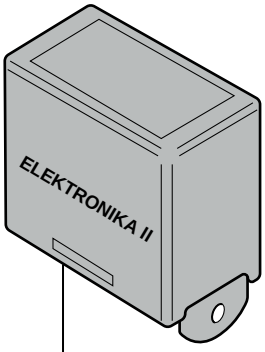

560249= 230V
GICAR CODE 9.5.37.10G

560250= 110V

8 PIN DOPPI
8 DOUBLE PINS

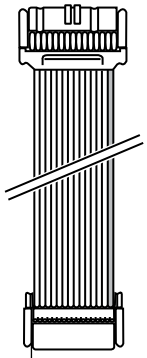

620707 800 mm
ELEKTRONIKA II

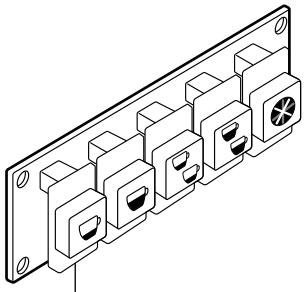

560248
ELEKTRONIKA II

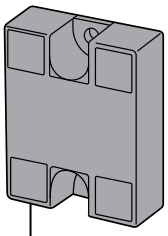

560230

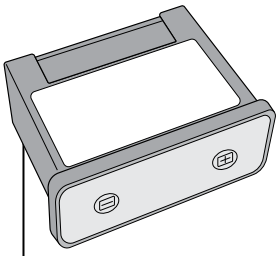

560233
SYNCHRONIKA
GICAR CODE 9.03.00.95G00

VERDE
GREEN

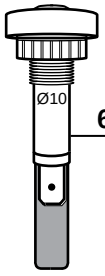

617733 220V

ROSSO
RED

617734 220V

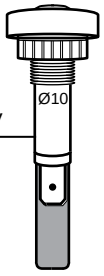

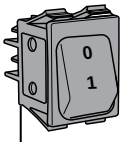

560232

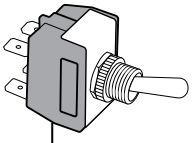

560231

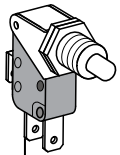

621271

CASA V

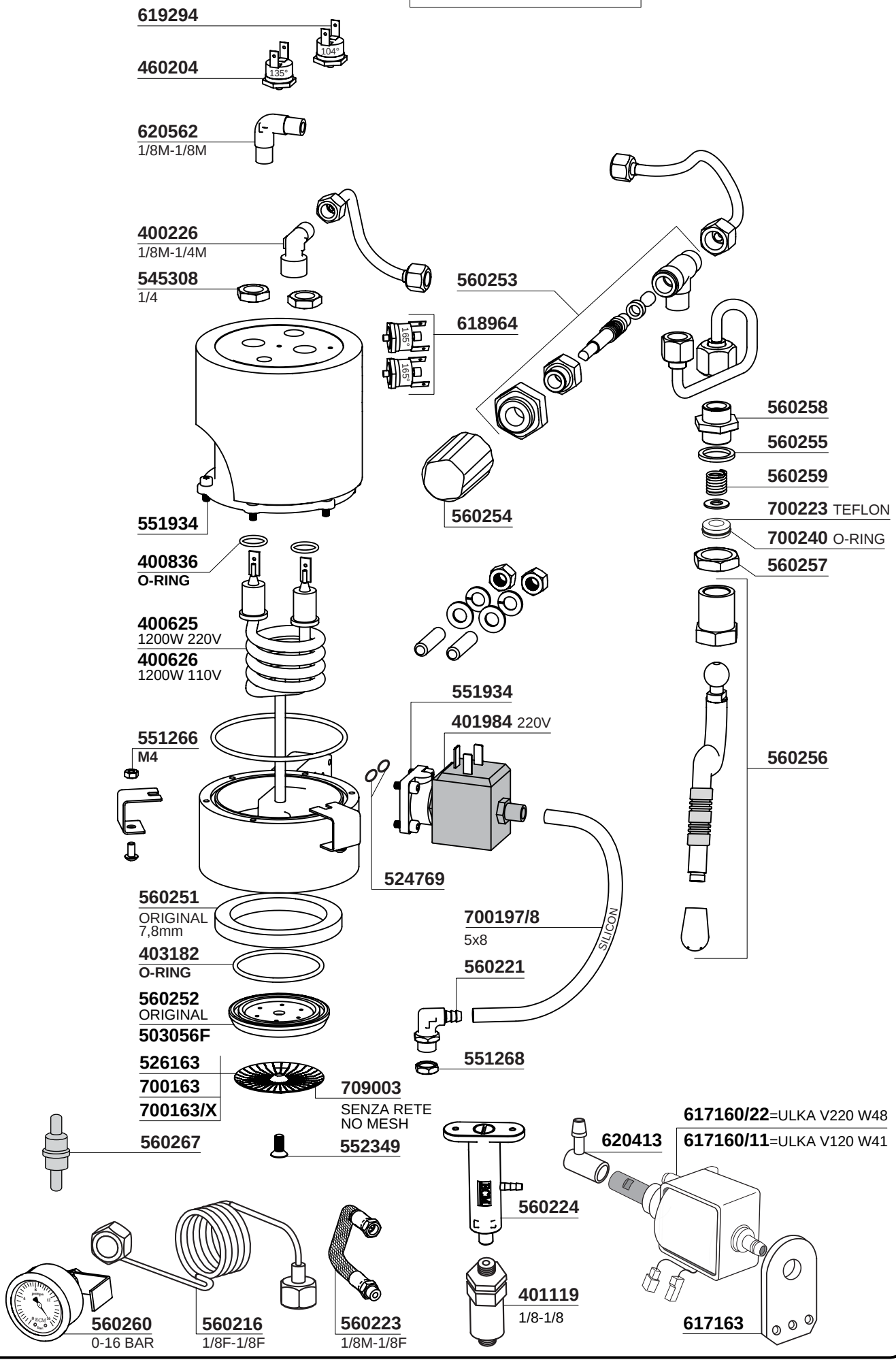
619294
104°
460204
135°
620562
1/8M-1/8M
400226
1/8M-1/4M
545308
1/4
560253
618964
165°
165°
560258
560255
560259
700223 TEFLON
700240 O-RING
560257
560254
551934
400836
O-RING
400625
1200W 220V
400626
1200W 110V
551934
401984 220V
551266
M4
560256
524769
560251
ORIGINAL
7,8mm
700197/8
5x8
SILICON
403182
O-RING
560221
560252
ORIGINAL
503056F
551268
526163
700163
700163/X
709003
SENZA RETE
NO MESH
560267
552349
620413
617160/22=ULKA V220 W48
617160/11=ULKA V120 W41
560224
401119
1/8-1/8
560260
0-16 BAR
560216
1/8F-1/8F
560223
1/8M-1/8F
617163

514417 5gr
514418 6gr
526418 6gr
521834 6gr
521830 7gr
521835 7gr
521832 8gr
521833 7gr
MICROFORI
MICROHOLES

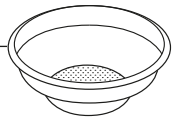

413706

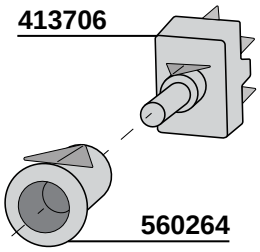

560264

560265

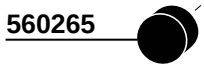

516575 12gr
521998 12gr
521994 14gr
521997 14gr
514419 14gr
ridgeless
526208 18gr
526757 21gr
300059 21gr
526758 24gr
521996 14gr
MICROFORI
MICROHOLES

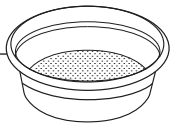

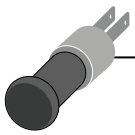

560262 220V
ORANGE

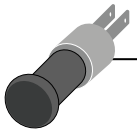

560263 220V
GREEN

521901
521902

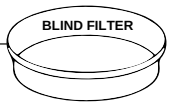

612143 Ø1,1 mm
612142 Ø1,2 mm



513744
PLASTIC

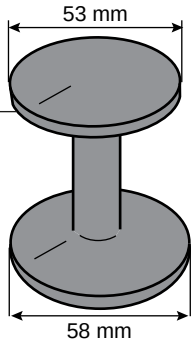

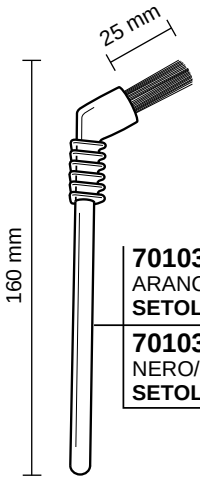

701038
ARANCIONE/ORANGE
SETOLE/BRISTLES Ø0,8mm

701038/N
NERO/BALCK
SETOLE/BRISTLES Ø0,8mm

560261
ORIGINAL

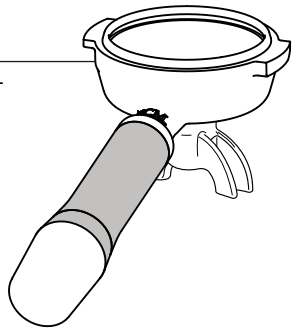

300202 3/8



511673 3/8

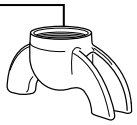

701046

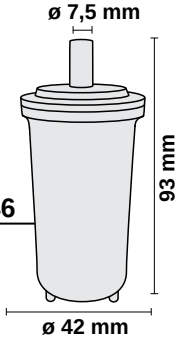

701047

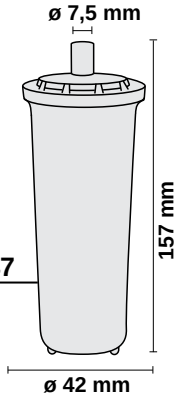

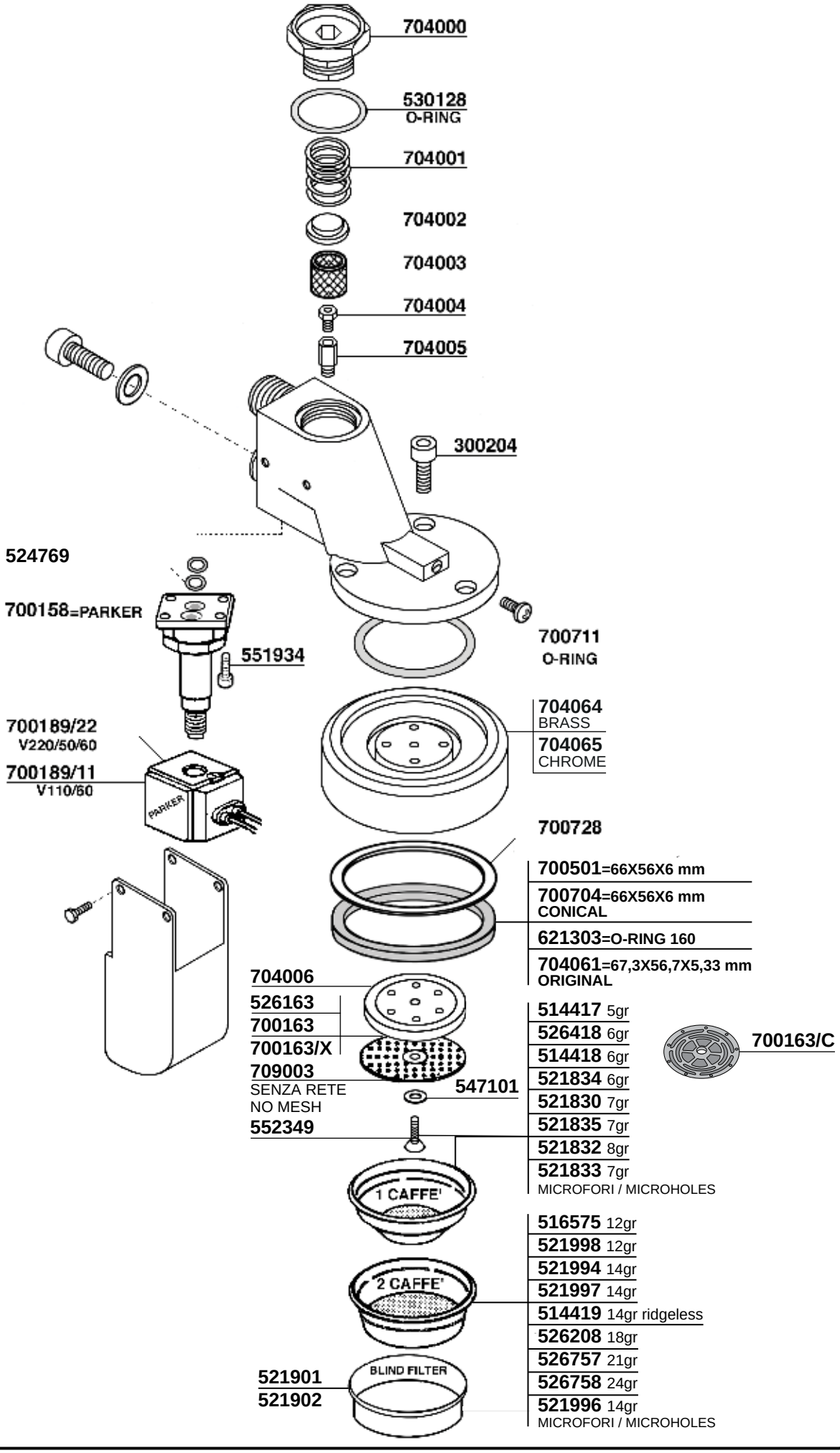
704000
530128
O-RING
704001
704002
704003
704004
704005
300204
524769
700158=PARKER
551934
700711
O-RING
704064
BRASS
704065
CHROME
700189/22
V220/50/60
700189/11
V110/60
PARKER
700728
700501=66X56X6 mm
700704=66X56X6 mm
CONICAL
621303=O-RING 160
704061=67,3X56,7X5,33 mm
ORIGINAL
704006
526163
700163
700163/X
709003
SENZA RETE
NO MESH
547101
552349
514417 5gr
526418 6gr
514418 6gr
521834 6gr
521830 7gr
521835 7gr
521832 8gr
521833 7gr
MICROFORI / MICROHOLES
700163/C
1 CAFFE'
516575 12gr
521998 12gr
521994 14gr
521997 14gr
514419 14gr ridgeless
526208 18gr
526757 21gr
526758 24gr
521996 14gr
MICROFORI / MICROHOLES
2 CAFFE'
521901
521902
BLIND FILTER

BARLUME

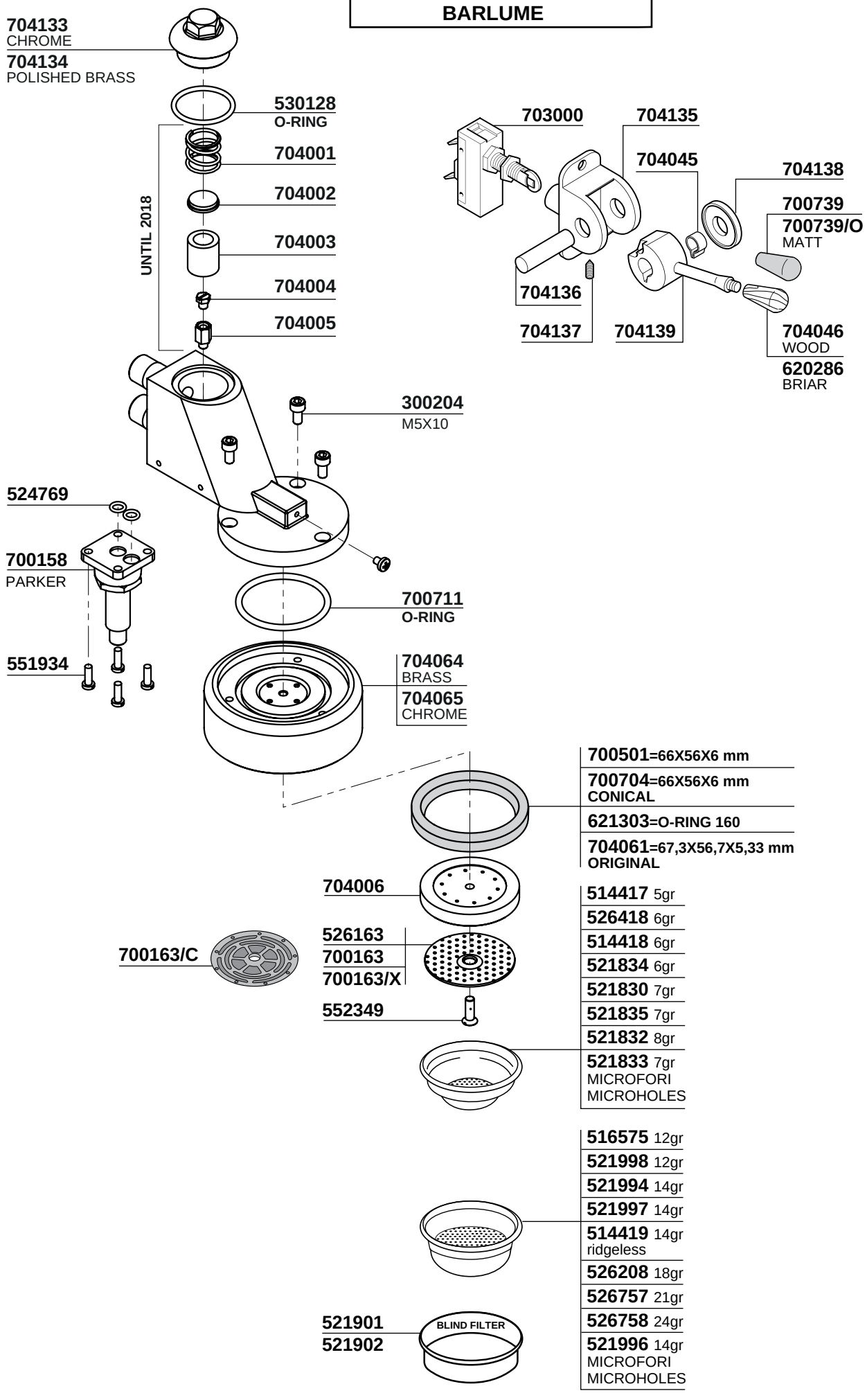
704133
CHROME
704134
POLISHED BRASS
530128
O-RING
704001
704002
704003
704004
704005
UNTIL 2018
703000
704135
704045
704138
700739
700739/O
MATT
704136
704137
704139
704046
WOOD
620286
BRIAR
300204
M5X10
524769
700158
PARKER
551934
700711
O-RING
704064
BRASS
704065
CHROME
700501=66X56X6 mm
700704=66X56X6 mm
CONICAL
621303=O-RING 160
704061=67,3X56,7X5,33 mm
ORIGINAL
704006
700163/C
526163
700163
700163/X
552349
514417 5gr
526418 6gr
514418 6gr
521834 6gr
521830 7gr
521835 7gr
521832 8gr
521833 7gr
MICROFORI
MICROHOLES
516575 12gr
521998 12gr
521994 14gr
521997 14gr
514419 14gr
ridgeless
526208 18gr
526757 21gr
526758 24gr
521996 14gr
MICROFORI
MICROHOLES
521901
521902
BLIND FILTER

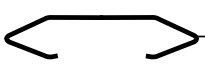

612143 =Ø1,1mm
612142 =Ø1,2mm

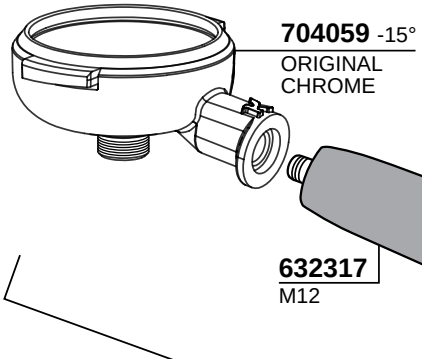

704059 -15°
ORIGINAL
CHROME

632317
M12

617940
CHROMATE
PLUG

704053



612143 =Ø1,1mm
612142 =Ø1,2mm

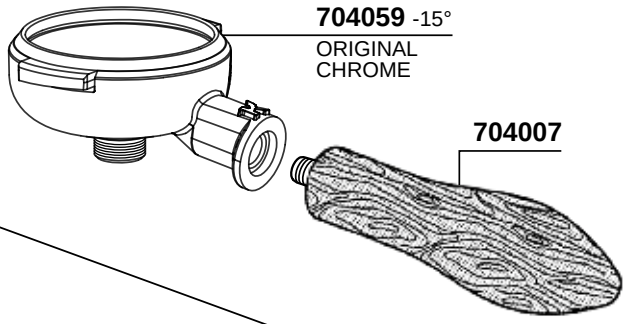

704059 -15°
ORIGINAL
CHROME

704007

704051



Ø1,1mm=**612143**
Ø1,2mm=**612142**

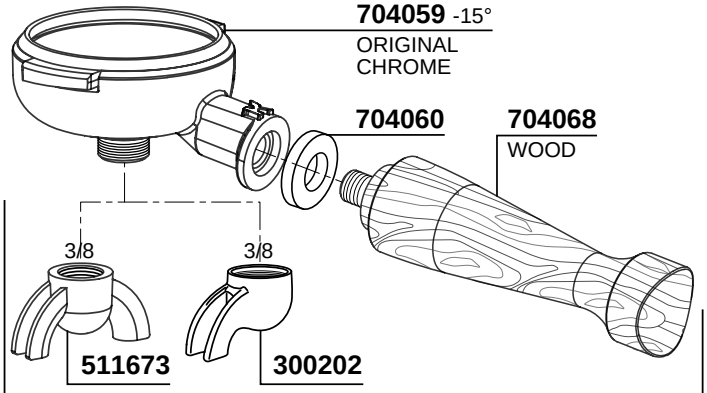

704059 -15°
ORIGINAL
CHROME

704060

704068
WOOD

3/8

3/8

511673

300202

704069 1CUP
704070 2CUP



502003



700789



511672

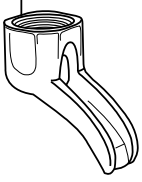

700024

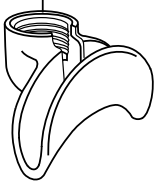

511674



511675



511672/R

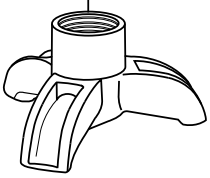

618522

120

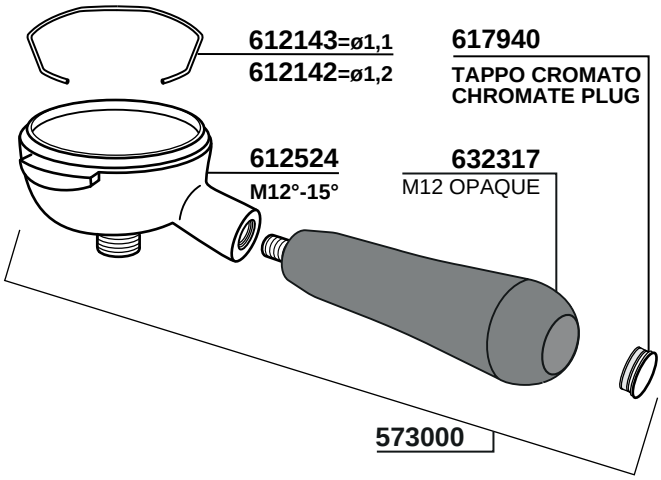
612143=ø1,1
612142=ø1,2
617940
TAPPO CROMATO
CHROMATE PLUG
612524
M12°-15°
632317
M12 OPAQUE
573000

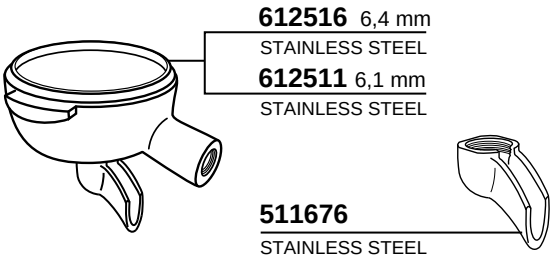
612516 6,4 mm
STAINLESS STEEL
612511 6,1 mm
STAINLESS STEEL
511676
STAINLESS STEEL

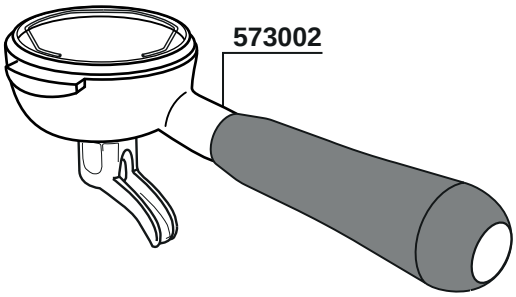
573002

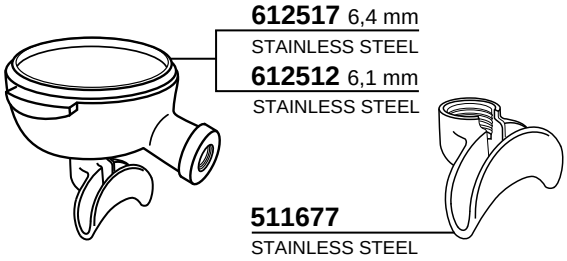
612517 6,4 mm
STAINLESS STEEL
612512 6,1 mm
STAINLESS STEEL
511677
STAINLESS STEEL

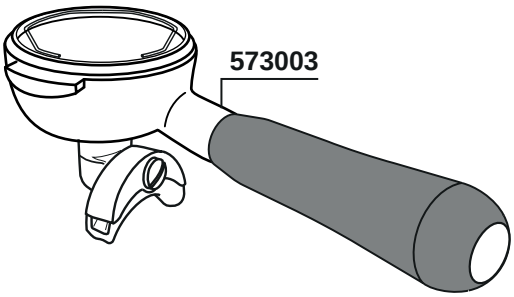
573003

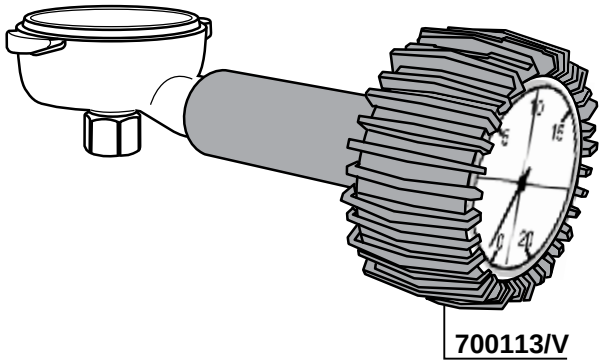
700113/V

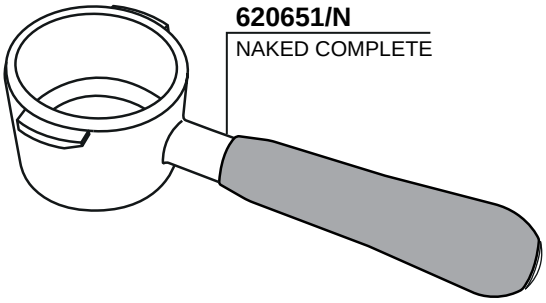
620651/N
NAKED COMPLETE

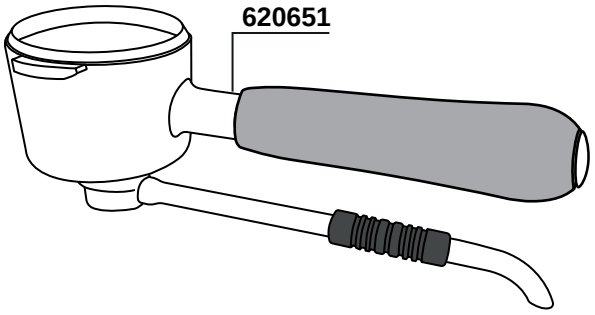
620651

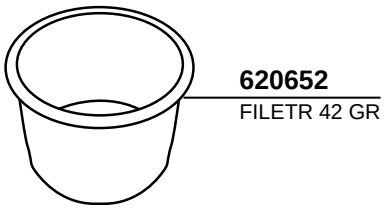
620652
FILETR 42 GR

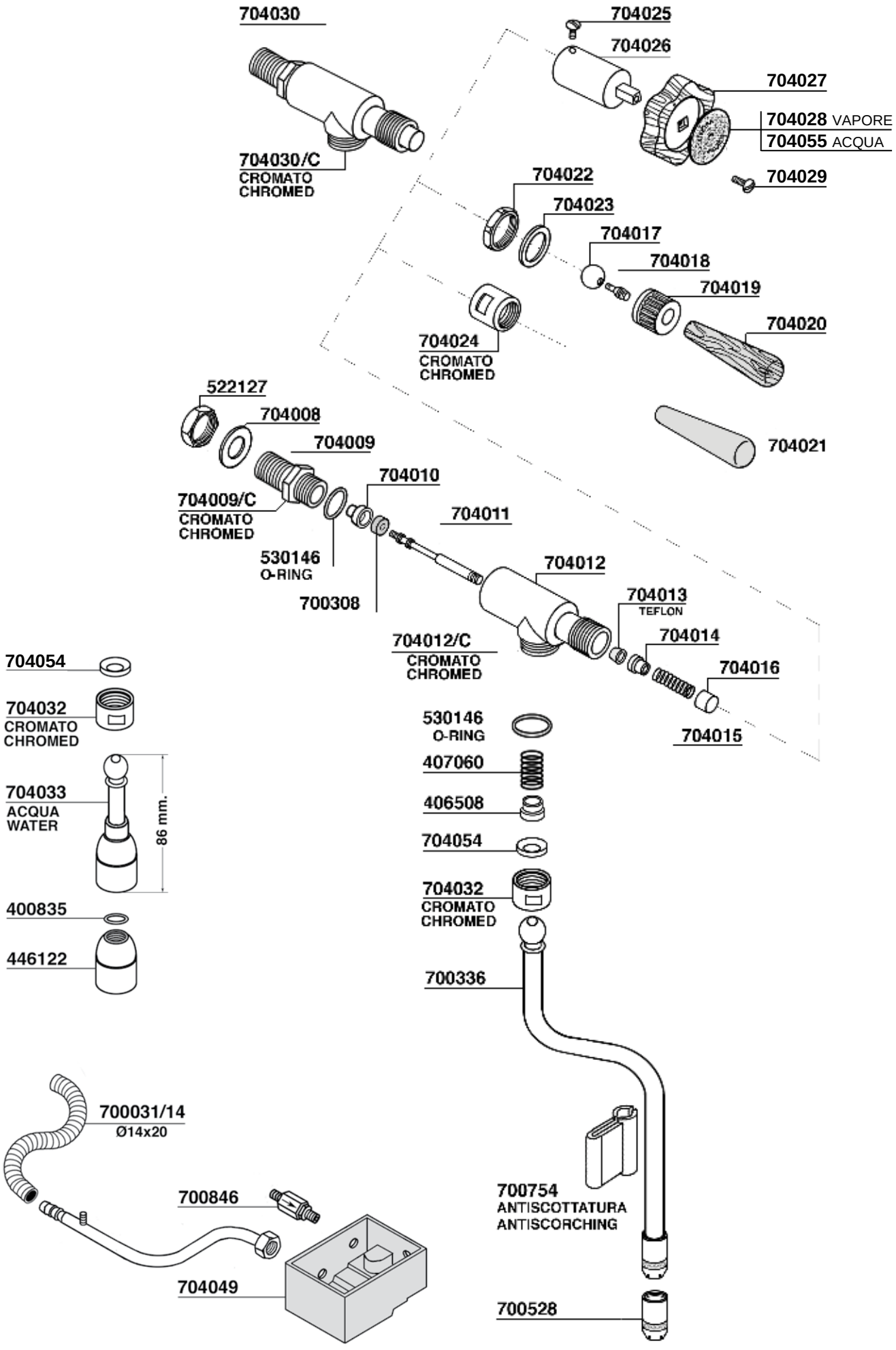
704030
704030/C
CROMATO
CHROMED
704025
704026
704027
704028 VAPORE
704055 ACQUA
704029
704022
704023
704017
704018
704019
704020
704024
CROMATO
CHROMED
522127
704008
704009
704010
704009/C
CROMATO
CHROMED
704011
530146
O-RING
700308
704012
704013
TEFLON
704014
704016
704012/C
CROMATO
CHROMED
704015
704021
704054
704032
CROMATO
CHROMED
704033
ACQUA
WATER
86 mm.
400835
446122
530146
O-RING
407060
406508
704054
704032
CROMATO
CHROMED
700336
700031/14
Ø14x20
700846
704049
700754
ANTISCOTTATURA
ANTISCORCHING
700528

ELEKTRA

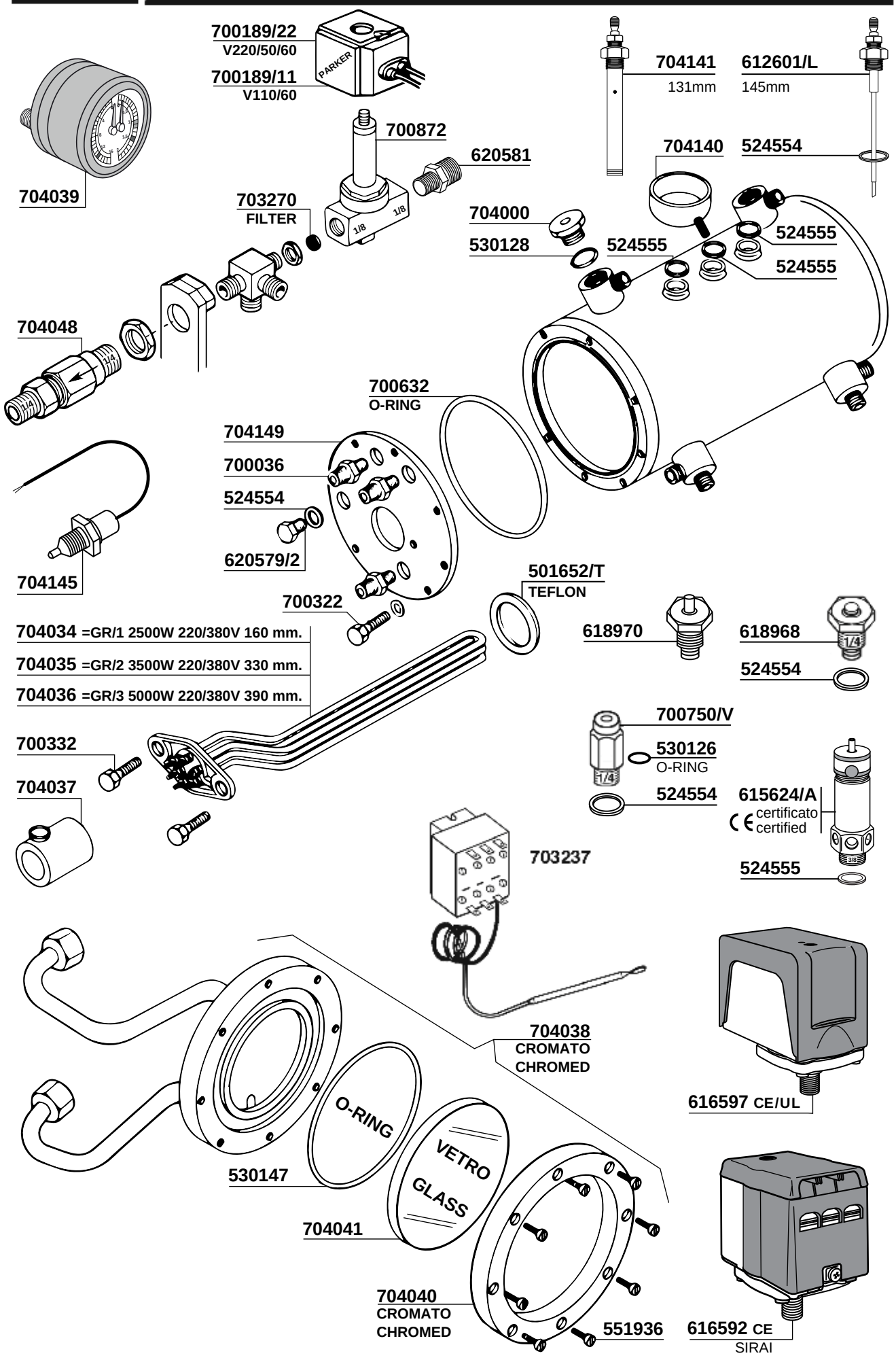
700189/22
V220/50/60
700189/11
V110/60
PARKER
704039
700872
620581
703270
FILTER
1/8
1/8
704141
131mm
612601/L
145mm
704140
524554
704000
530128
524555
524555
524555
704048
700632
O-RING
704149
700036
524554
620579/2
704145
700322
501652/T
TEFLON
704034 =GR/1 2500W 220/380V 160 mm.
704035 =GR/2 3500W 220/380V 330 mm.
704036 =GR/3 5000W 220/380V 390 mm.
618970
618968
524554
700750/V
530126
O-RING
524554
615624/A
certificato
certified
524555
700332
704037
703237
704038
CROMATO
CHROMED
616597 CE/UL
O-RING
530147
VETRO
GLASS
704041
704040
CROMATO
CHROMED
551936
616592 CE
SIRAI

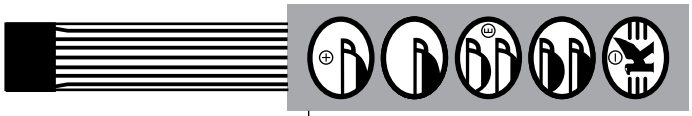

704056

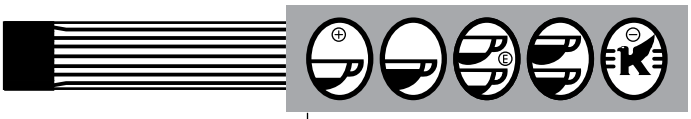

704057

704042=V220 NERA-BLACK | 704042/R=V220 RADICA-BRIERWOOD

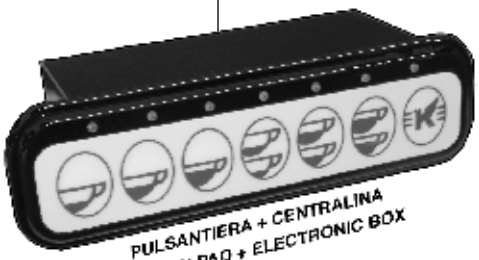



704058

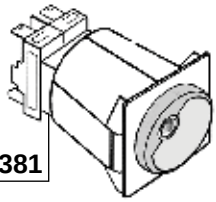

630381



579671

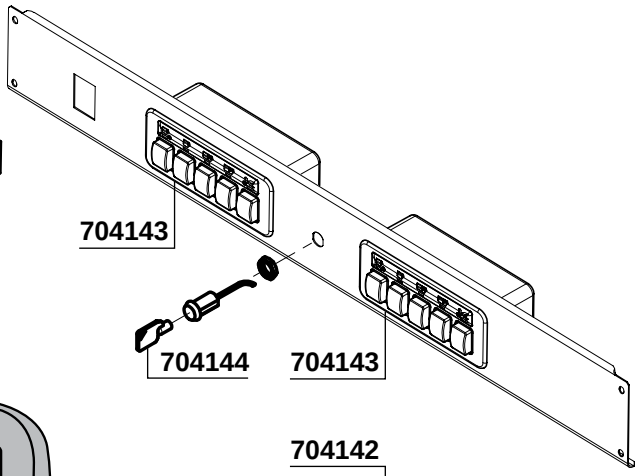

704143

704144

704143

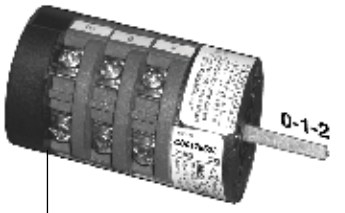

704043

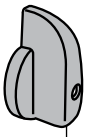

613656

704142

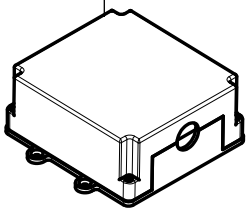

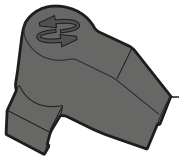

617902

551937

530148



617903/G



615978/T



615979

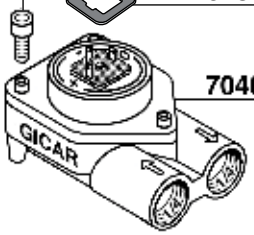

704047



617991

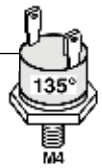

704050



607267

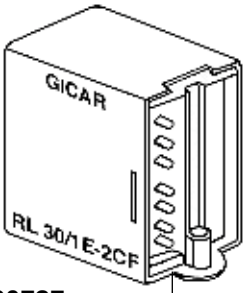

700737=V220
700737/11=V110

700653/22=V220

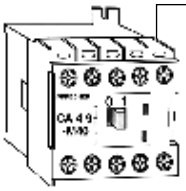

704147

704146

704148

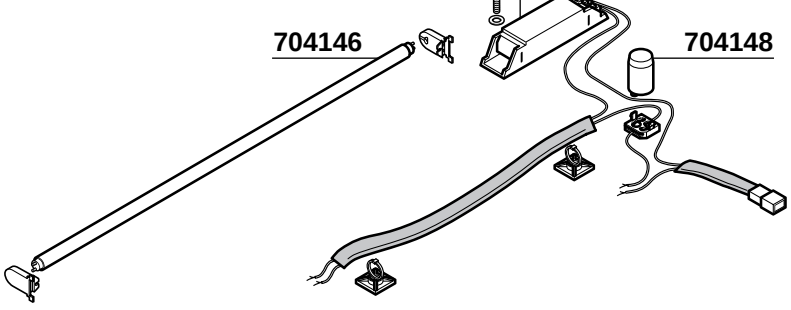

VERDE



617733 =V220

617734 =V220

ROSSO



ELEKTRA

MICROCASA SEMIAUTOMATICA

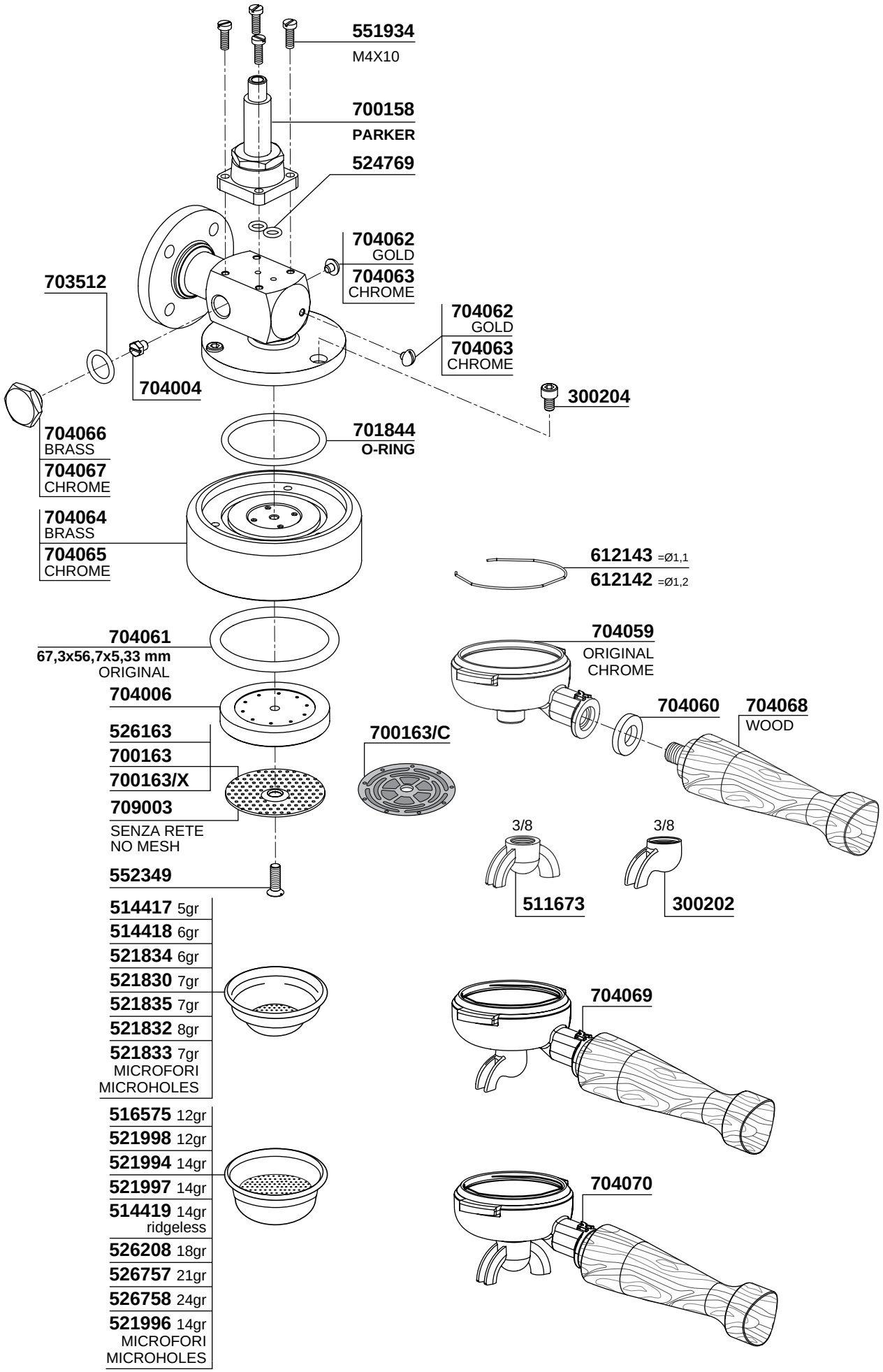

ELEKTRA

MICROCASA SEMIAUTOMATICA

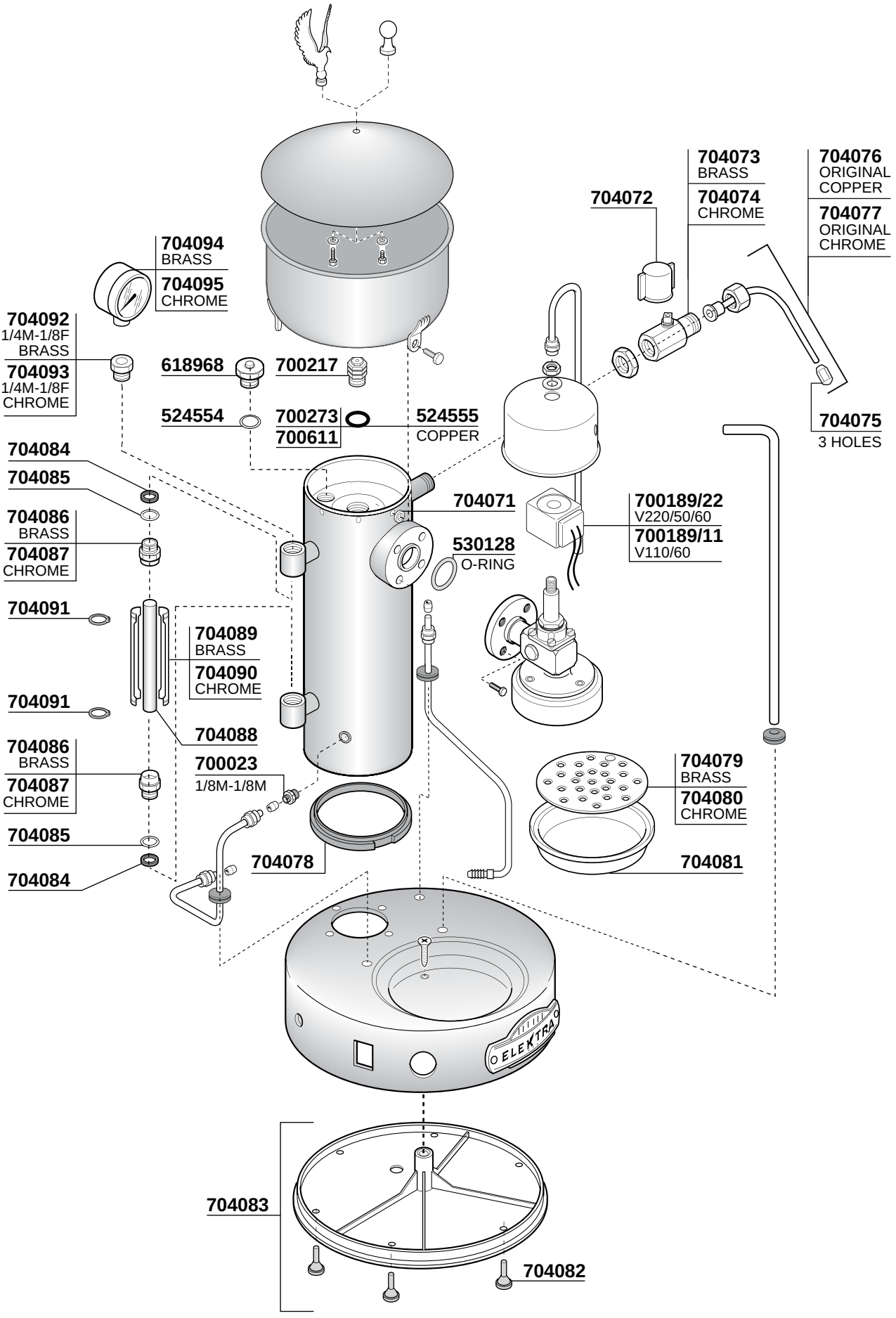

ELEKTRA

MICROCASA SEMIAUTOMATICA

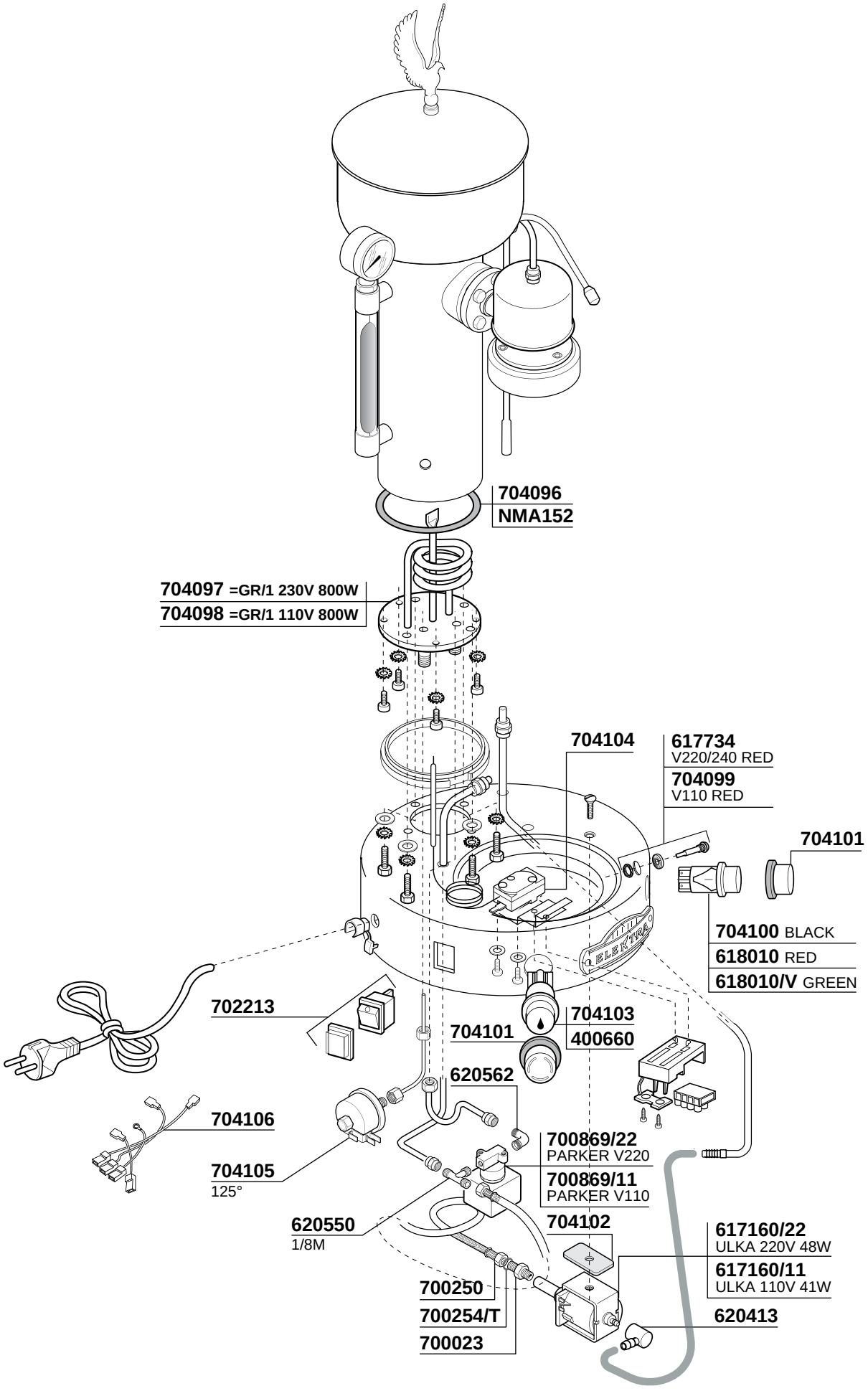

ELEKTRA

MICROCASA LEVA

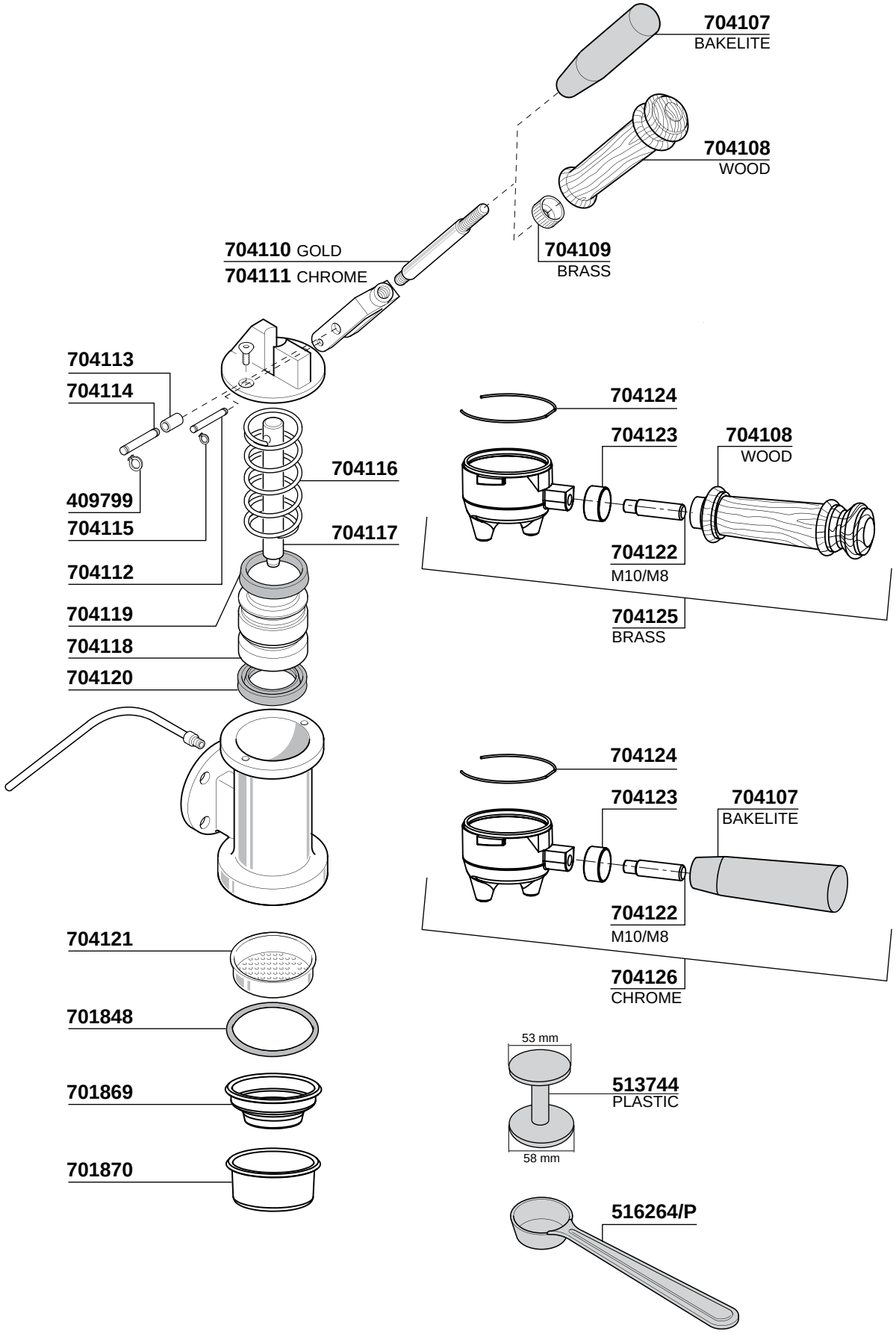

ELEKTRA

MICROCASA LEVA

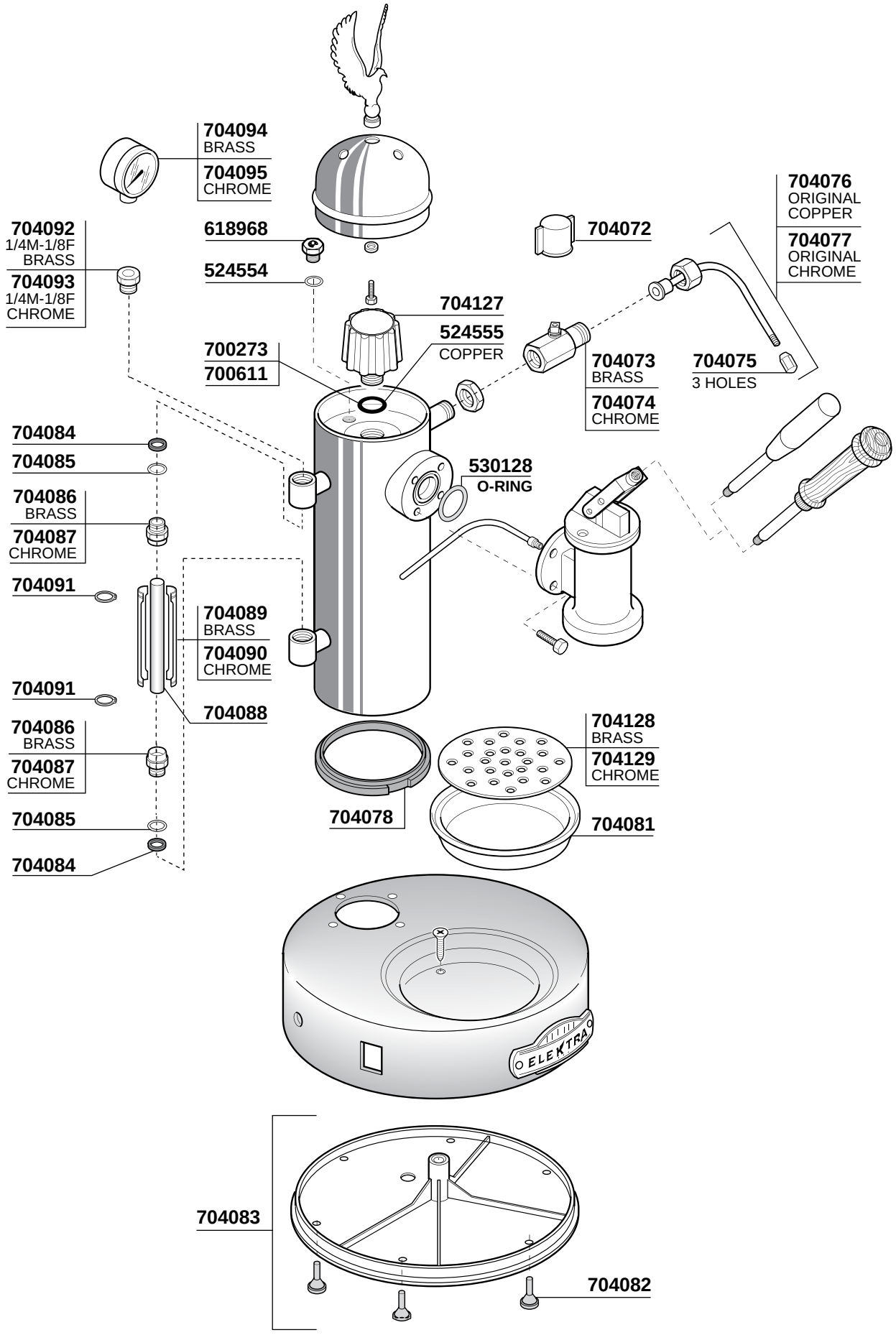

MICROCASA LEVA

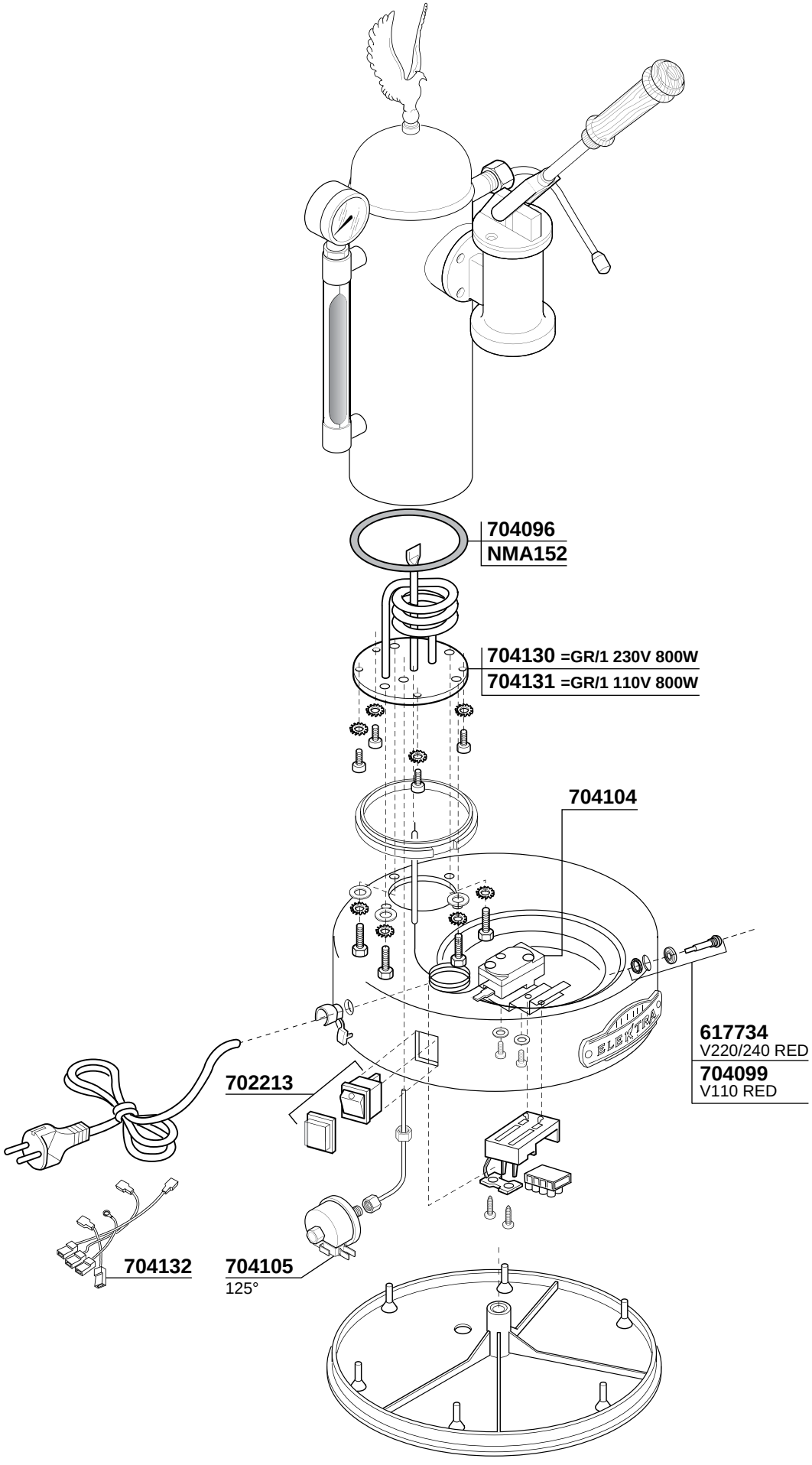

EXPOBAR

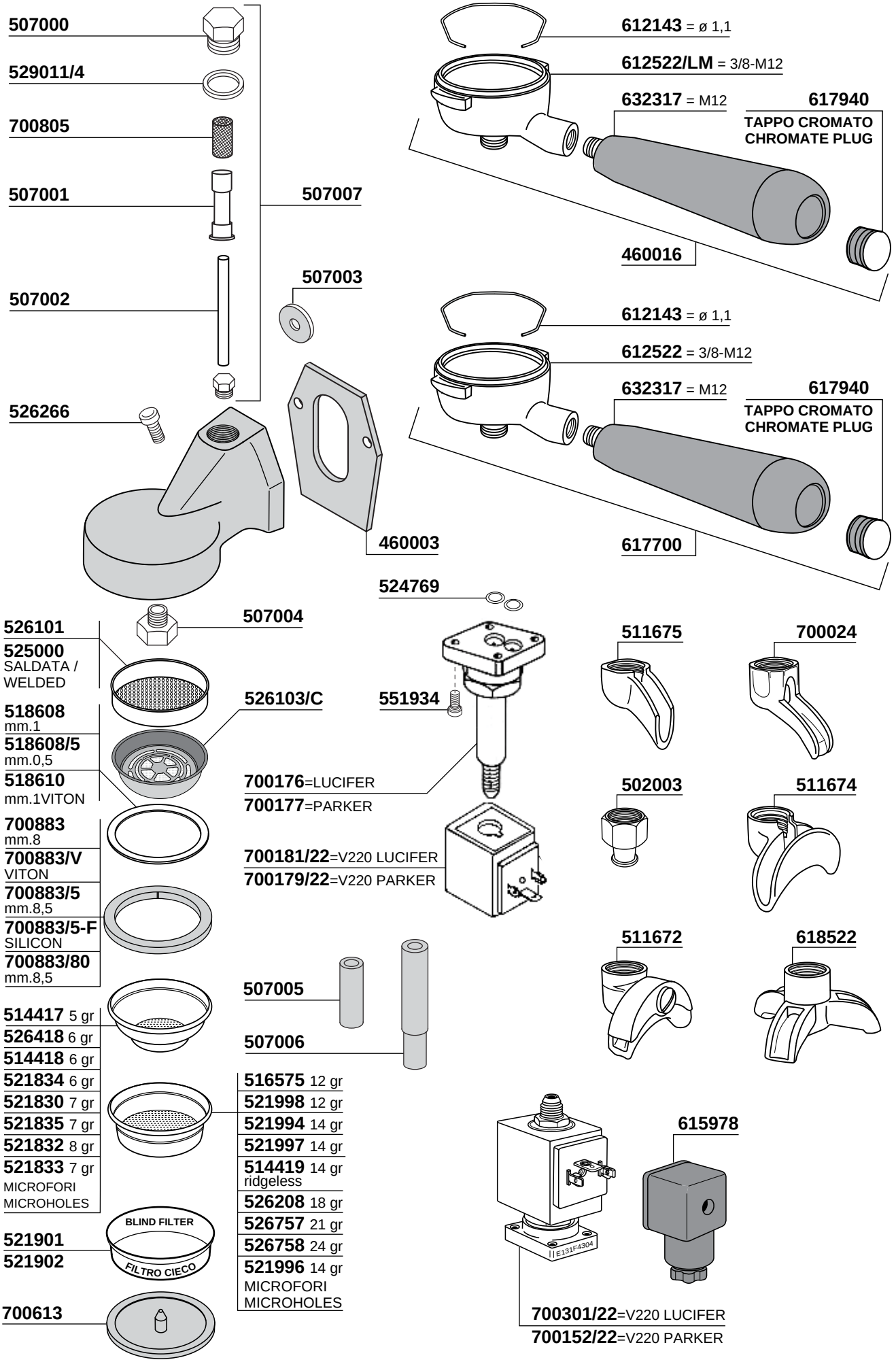
507000
529011/4
700805
507001
507002
507007
507003
526266
460003
612143 = ø 1,1
612522/LM = 3/8-M12
632317 = M12
617940
TAPPO CROMATO
CHROMATE PLUG
460016
612143 = ø 1,1
612522 = 3/8-M12
632317 = M12
617940
TAPPO CROMATO
CHROMATE PLUG
617700
524769
507004
526101
525000
SALDATA /
WELDED
518608
mm.1
518608/5
mm.0,5
518610
mm.1VITON
526103/C
551934
700176=LUCIFER
700177=PARKER
700883
mm.8
700883/V
VITON
700883/5
mm.8,5
700883/5-F
SILICON
700883/80
mm.8,5
700181/22=V220 LUCIFER
700179/22=V220 PARKER
511675
700024
502003
511674
511672
618522
507005
507006
514417 5 gr
526418 6 gr
514418 6 gr
521834 6 gr
521830 7 gr
521835 7 gr
521832 8 gr
521833 7 gr
MICROFORI
MICROHOLES
516575 12 gr
521998 12 gr
521994 14 gr
521997 14 gr
514419 14 gr
ridgeless
526208 18 gr
526757 21 gr
526758 24 gr
521996 14 gr
MICROFORI
MICROHOLES
BLIND FILTER
FILTRO CIECO
521901
521902
700613
615978
E131F4304
700301/22=V220 LUCIFER
700152/22=V220 PARKER

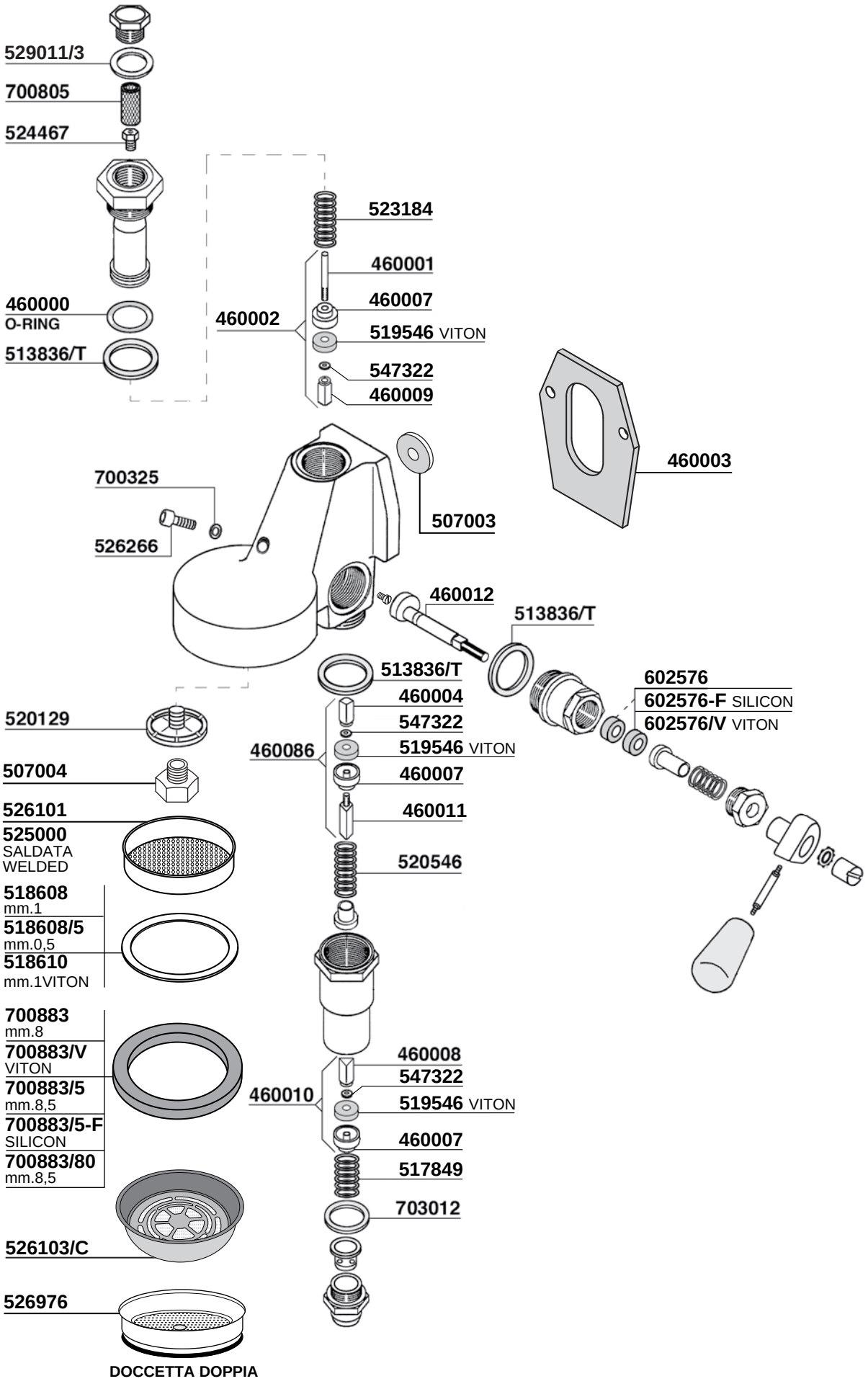

DOCCETTA DOPPIA
DOUBLE SHOWER

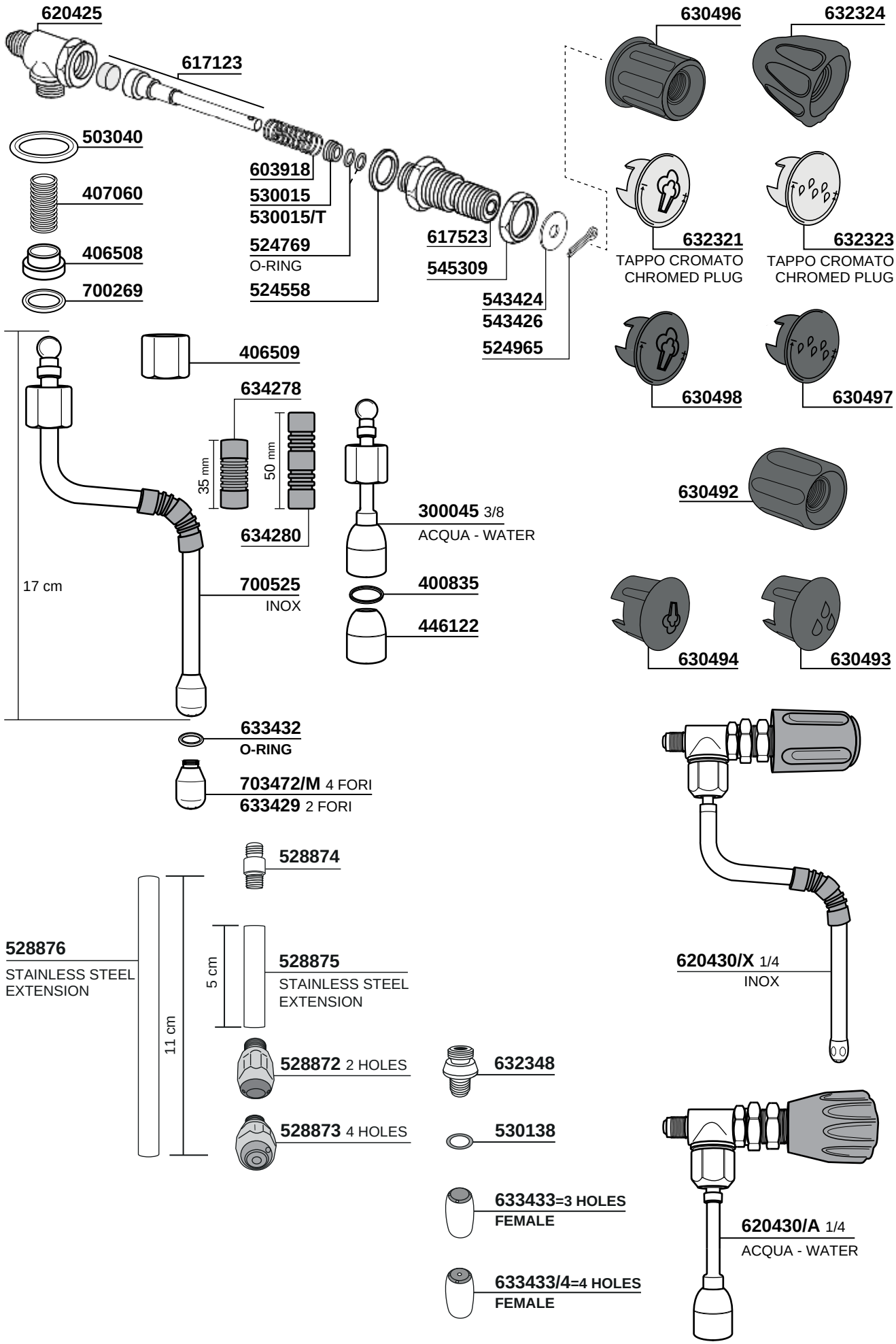
620425
617123
503040
407060
406508
700269
603918
530015
530015/T
524769
O-RING
524558
617523
545309
543424
543426
524965
630496
632324
632321
TAPPO CROMATO
CHROMED PLUG
632323
TAPPO CROMATO
CHROMED PLUG
630498
630497
406509
634278
35 mm
50 mm
634280
17 cm
700525
INOX
300045 3/8
ACQUA - WATER
400835
446122
630492
630494
630493
633432
O-RING
703472/M 4 FORI
633429 2 FORI
528874
528876
STAINLESS STEEL
EXTENSION
11 cm
5 cm
528875
STAINLESS STEEL
EXTENSION
528872 2 HOLES
528873 4 HOLES
620430/X 1/4
INOX
632348
530138
633433=3 HOLES
FEMALE
633433/4=4 HOLES
FEMALE
620430/A 1/4
ACQUA - WATER

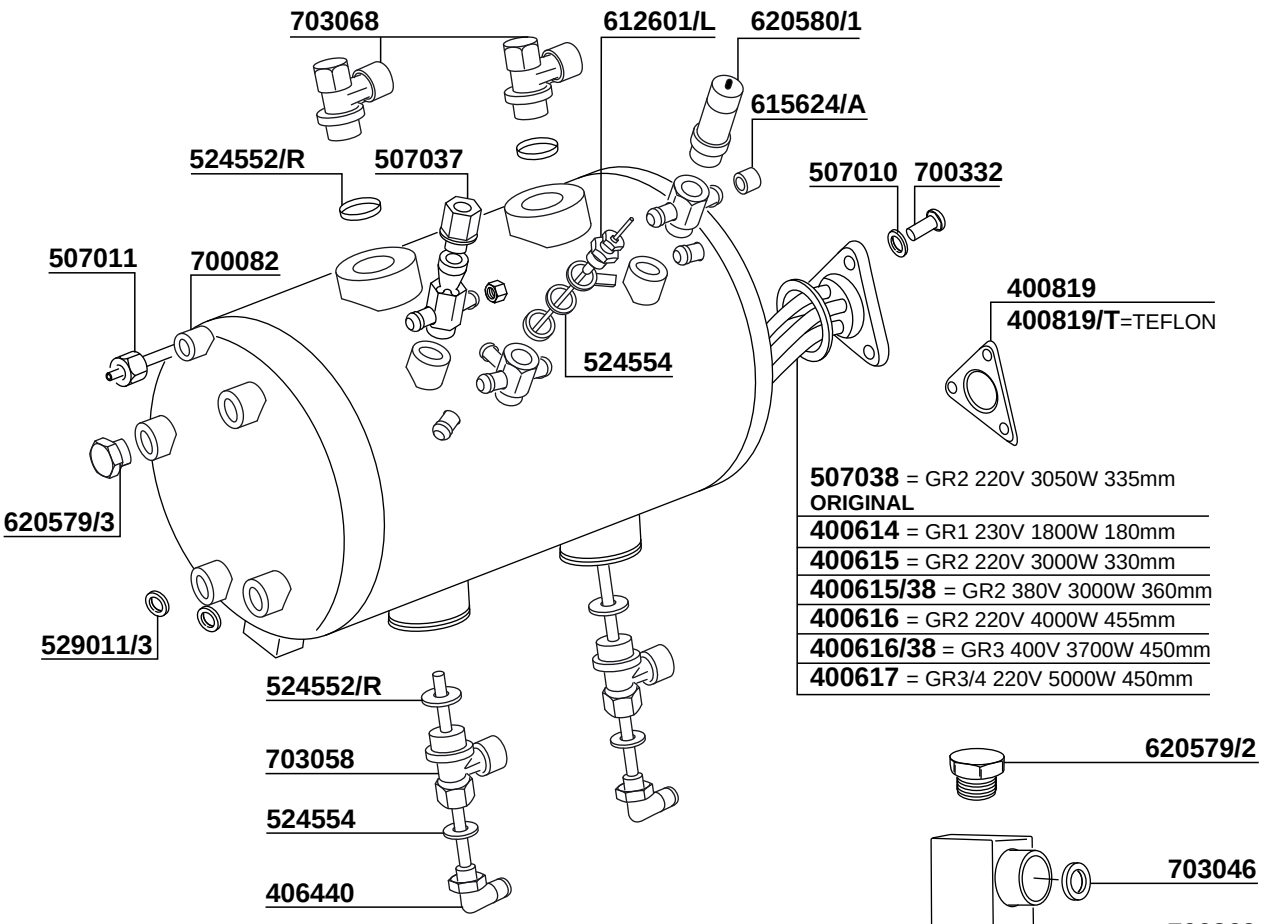
703068
612601/L
620580/1
615624/A
524552/R
507037
507010
700332
507011
700082
400819
400819/T=TEFLON
524554
620579/3
529011/3
507038 = GR2 220V 3050W 335mm
ORIGINAL
400614 = GR1 230V 1800W 180mm
400615 = GR2 220V 3000W 330mm
400615/38 = GR2 380V 3000W 360mm
400616 = GR2 220V 4000W 455mm
400616/38 = GR3 400V 3700W 450mm
400617 = GR3/4 220V 5000W 450mm

524552/R
703058
524554
406440

620579/2
703046
700269

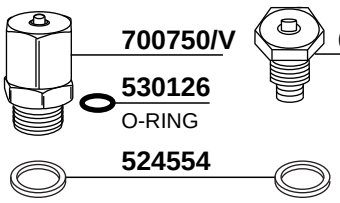
700750/V
618968
618970
530126
O-RING
524554

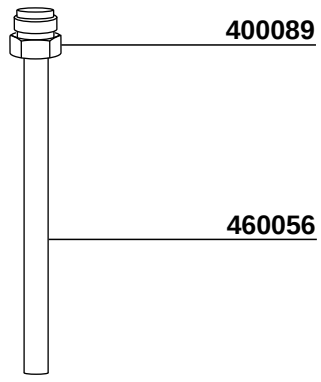
400089
460056

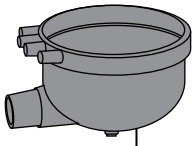
507012

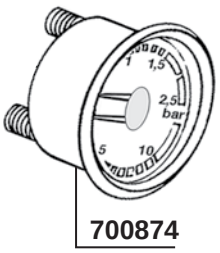
700874

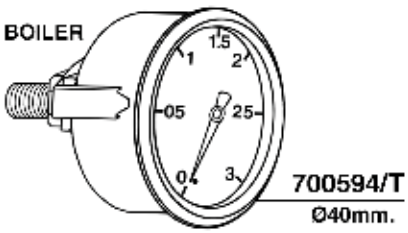
BOILER
700594/T
Ø40mm.

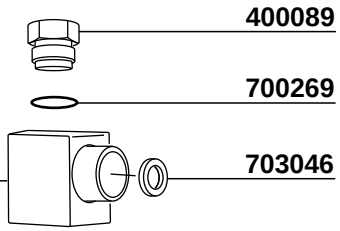
400089
700269
507013
703046

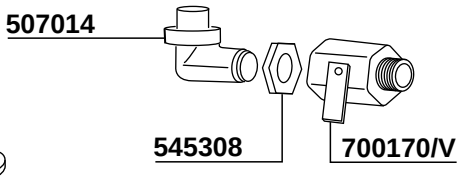
507014
545308
700170/V

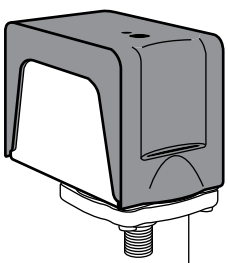
616597 CE/UL
SIRAI

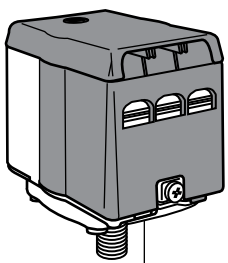
616592 CE
SIRAI

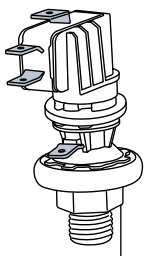
507034
16A 250V 1BAR 1/4

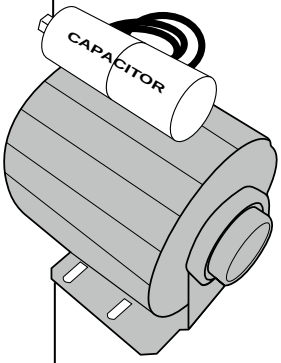

621347
CAPACITOR CONDENSAT. 10 µF

700084/22
V220/50/60 W165

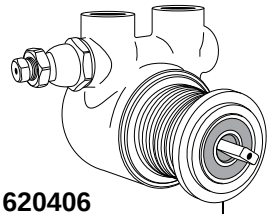

620406
ROTOFLOW 150 Lt/h

620406/X INOX

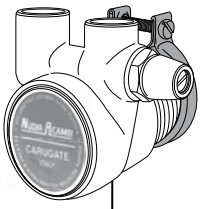

700055
100 Lt/h

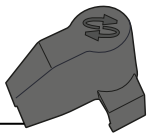

617902

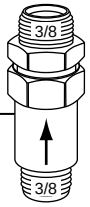

700011/E



620405/C

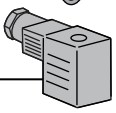

615978/T



615979

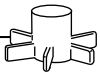

617903/G



530148



551937

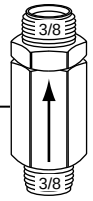

700011

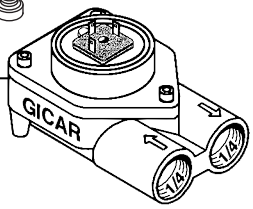

620405

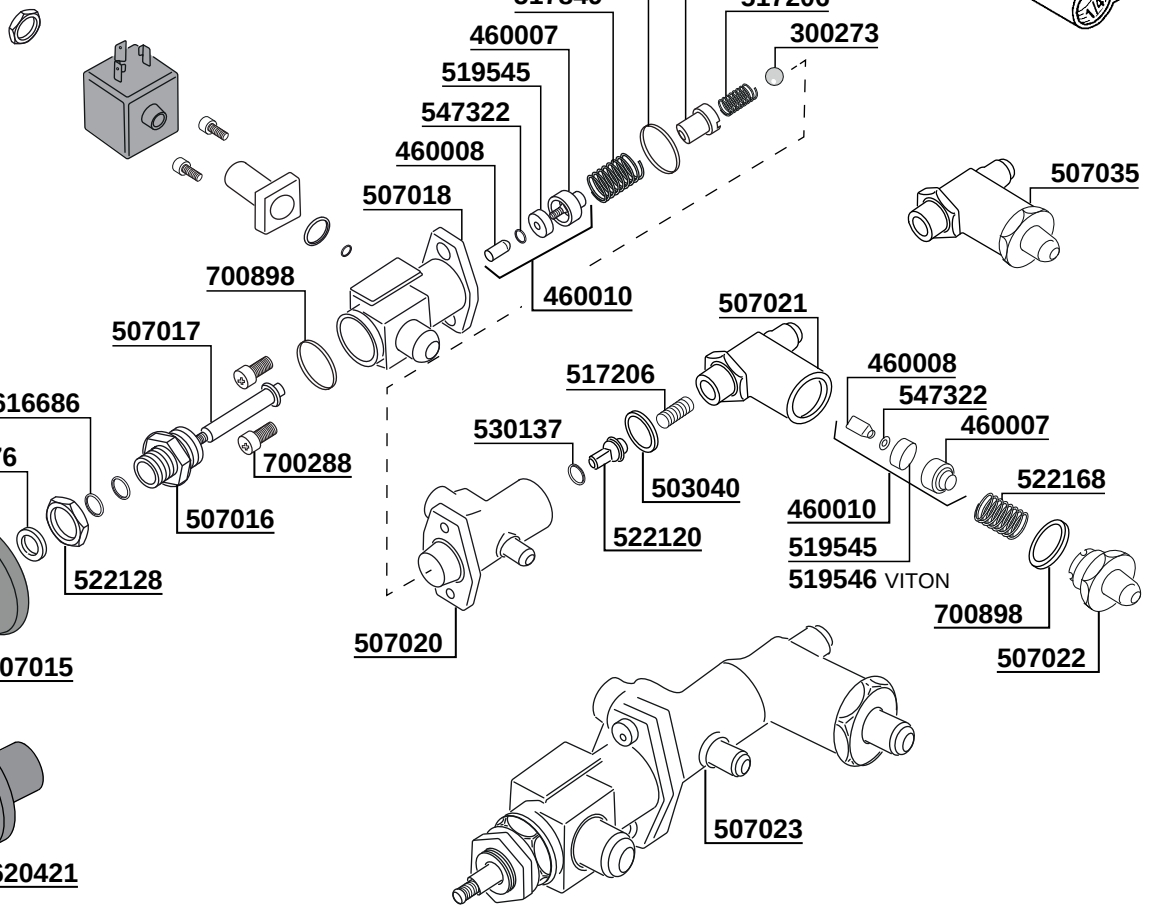

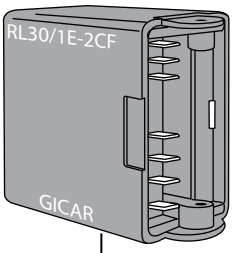

700737 220V
AUTOLIVELLO - AUTOFUEL
GICAR CODE 9.1.40.71G

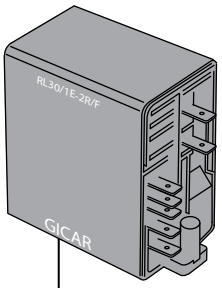

507031 240V
GICAR CODE 9.1.42.33G
507031/11 115V
GICAR CODE 9.1.42.36G

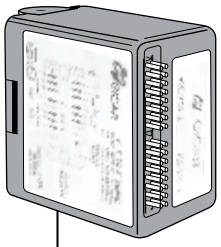

507028

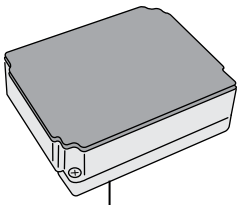

507029 230V
GICAR CODE 9.5.32.01G01



703296

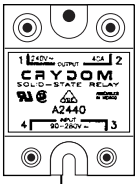

507042

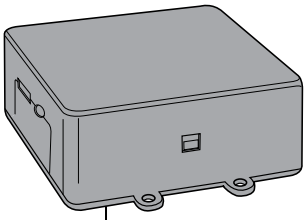

507036 230V
GICAR CODE 9.5.25.50G01

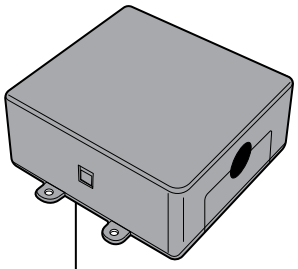

507040
GICAR CODE 9.5.25.27G



700749
20A 0-1

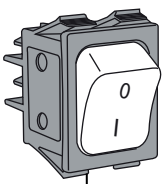

700429

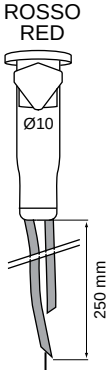

615511/22 220V

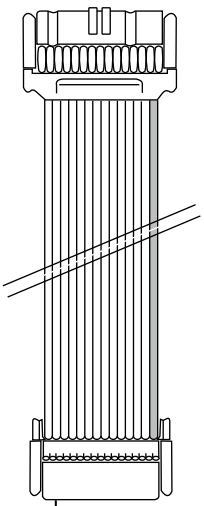

620706 600 mm - 16 PIN
620707 800 mm - 16 PIN



507008
GICAR CODE 8.9.46.46

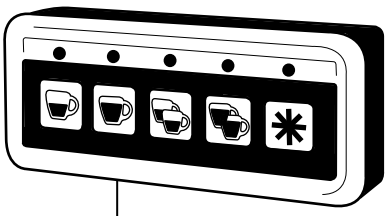

507024
GICAR CODE 9.9.09.51G

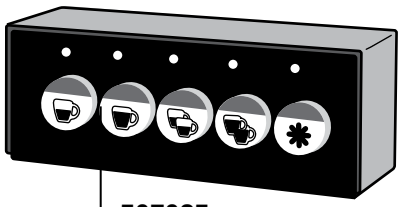

507025
GICAR CODE 9.9.07.28G

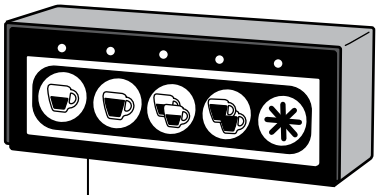

507026
GICAR CODE 9.5.27.60G

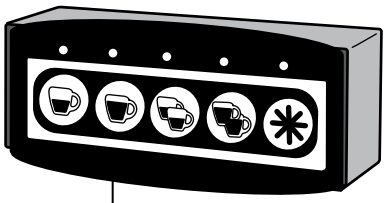

507027
GICAR CODE 9.5.28.30G 00

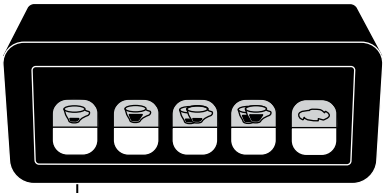

507032
GICAR CODE 9.5.28.61G 00

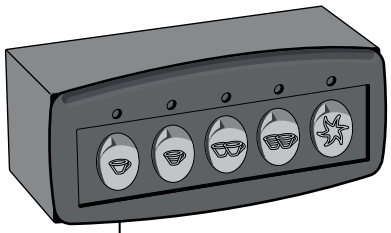

507039
GICAR CODE 9.5.28.66G 00

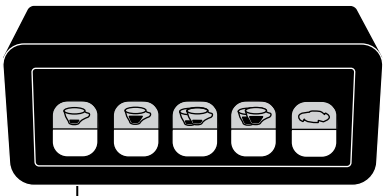

507041
GICAR CODE 9.9.07.66G

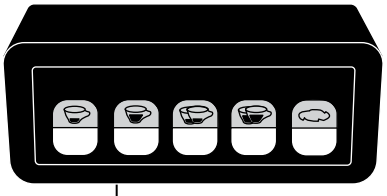

507033
GICAR CODE 9.5.28.59G 00

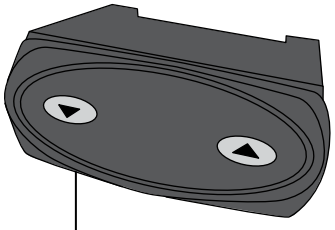

507030
GICAR CODE 9.3.00.43G

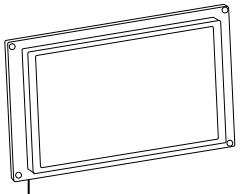

705342
DISPLAY LCD
GRAFICO 1GR
GICAR CODE 8.8.15.61G

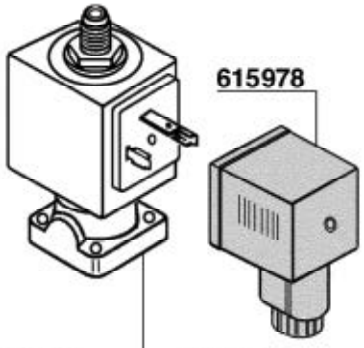

615978

PARKER	LUCIFER
700152/22=V220	700301/22=V220
700152/11=V110	700301/11=V110
619276=V24 DC	

700177=PARKER
700176=LUCIFER

524767



551934

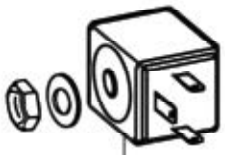

616079
611532
616081
616080
616078
616694
541160
616692
619122

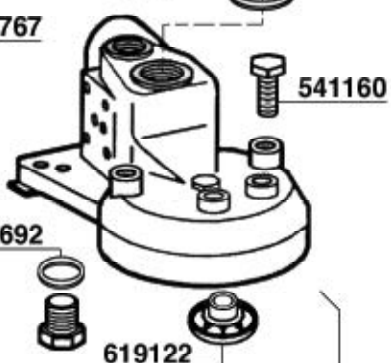

552349
526100/A
518608
518610 VITON
700005=8mm
700006=8,5mm
700007=9mm
516000=9mm
1a SERIE

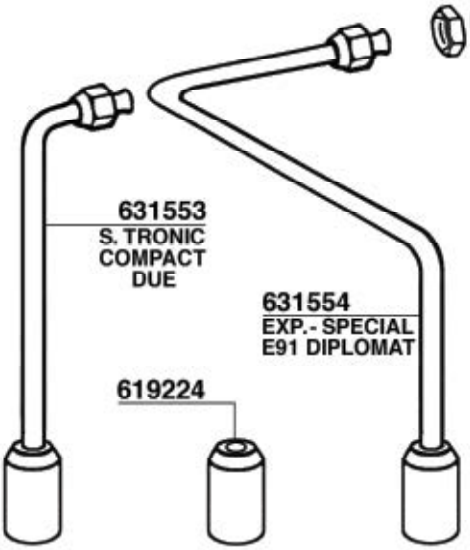

631553
S. TRONIC
COMPACT
DUE

631554
EXP.- SPECIAL
E91 DIPLOMAT

619224

PARKER	LUCIFER
700179/22=V220	700181/22=V220
700179/11=V110	700181/11=V110
591753=V24 DC	

518608
518610 VITON
516528=8mm
516528/V VITON
700006=8,5mm
700007=9mm
516000=9mm
631768
700163
700163/X
547101
552350
2a SERIE

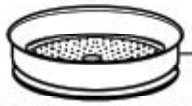

619976

DOCCETTA DOPPIA
DOUBLE SHOWER

700163/C



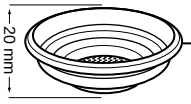

514418 6gr



521830 7gr
521832 8gr
521833 7gr
MICROFORI
MICROHOLES

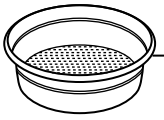

521994 14gr
514419 14gr ridgeless
516575 12gr
526208 18gr
700757 21gr
526758 24gr
521996 14gr
MICROFORI
MICROHOLES

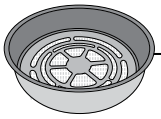

526103

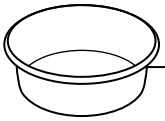

521902
BLIND FILTER

633847

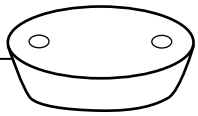

524761



551934



526100
525000
SALDATA/WELDED

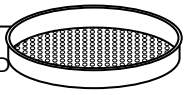

518608
516528=8mm
516528/V VITON
700006=8,5mm
700007=9mm
516000=9mm

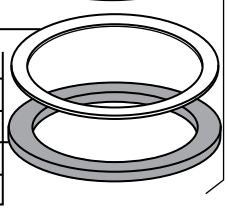

E91 DIPLOMAT

E91 - E92 - ELITE - EMBLEMA - ENOVA - STYLEMA - TEOREMA

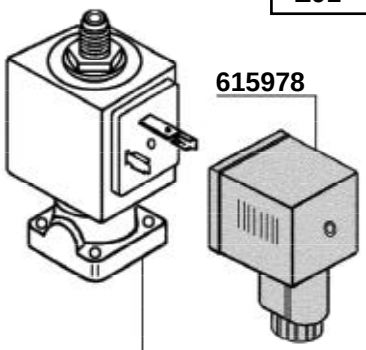

615978

PARKER	LUCIFER
700152/22=V220	700301/22=V220
700152/11=V110	700301/11=V110

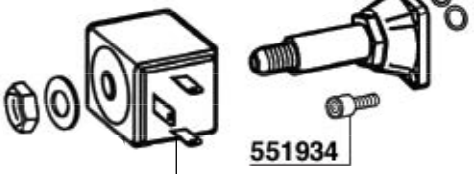

700177=PARKER
700176=LUCIFER

524767

551934

PARKER	LUCIFER
700179/22=V220	700181/22=V220
700179/11=V110	700181/11=V110

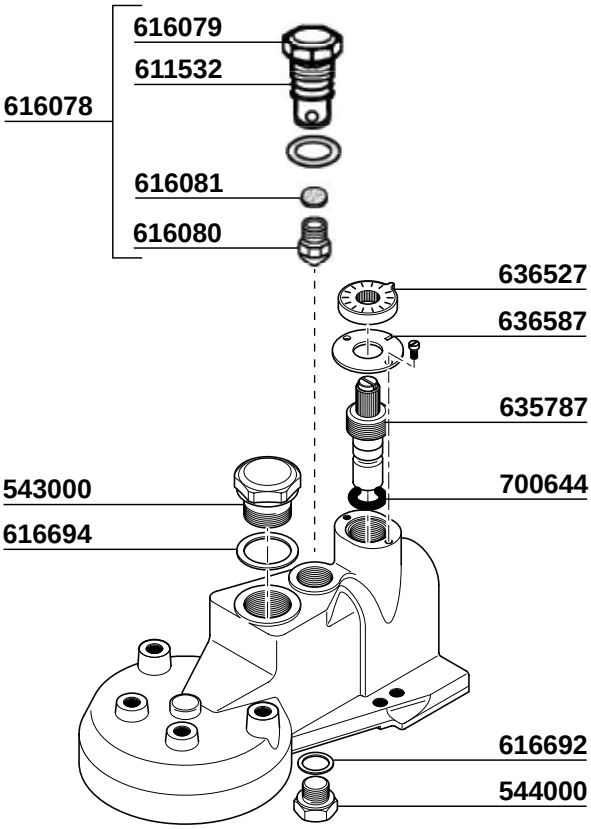

616079
611532
616078
616081
616080
636527
636587
635787
543000
700644
616694
616692
544000

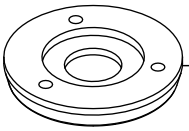

633847

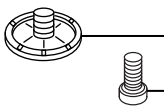

524761
551934

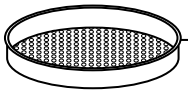

526100
525000 SALDATA/WELDED

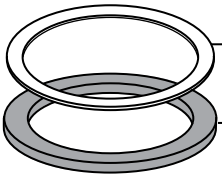

518608

516528=8mm
516528/V VITON
700006=8,5mm
700007=9mm
516000=9mm



NEW
619976
DOCCETTA DOPPIA
DOUBLE SHOWER

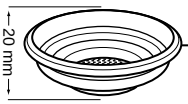

20 mm
514418 6gr



521830 7gr
521832 8gr
521833 7gr
MICROFORI
MICROHOLES

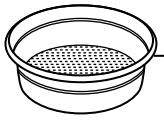

521994 14gr
514419 14gr ridgeless
516575 12gr
526208 18gr
700757 21gr
526758 24gr
521996 14gr
MICROFORI
MICROHOLES

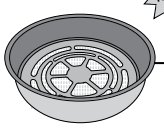

NEW
526103

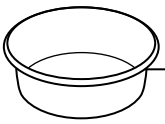

521902
BLIND FILTER

PORTAFILTRI



612143 = ø 1,1
612142 = ø 1,2

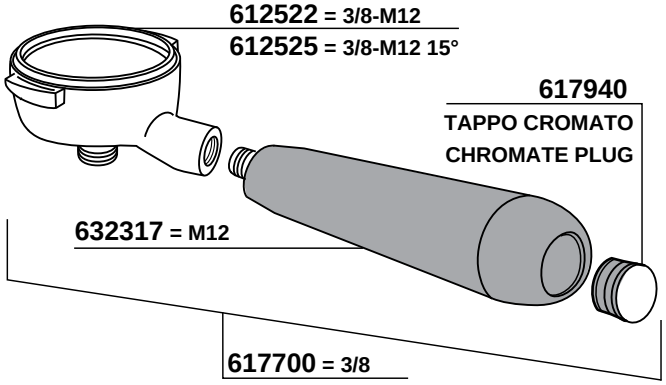

612522 = 3/8-M12
612525 = 3/8-M12 15°
617940
TAPPO CROMATO
CHROMATE PLUG
632317 = M12
617700 = 3/8
617716 = 3/8 15°

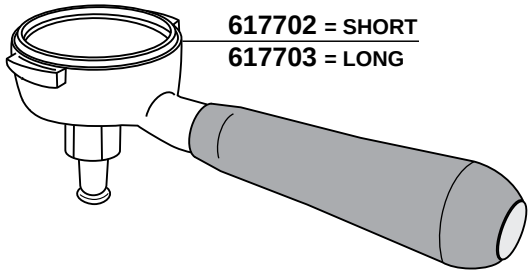

617702 = SHORT
617703 = LONG

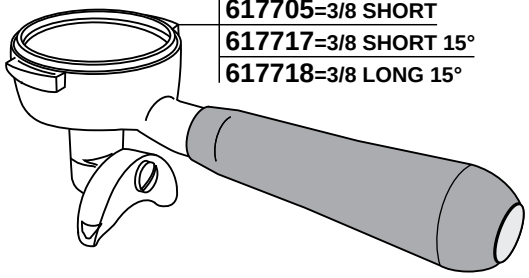

617105=3/8 LONG
617705=3/8 SHORT
617717=3/8 SHORT 15°
617718=3/8 LONG 15°

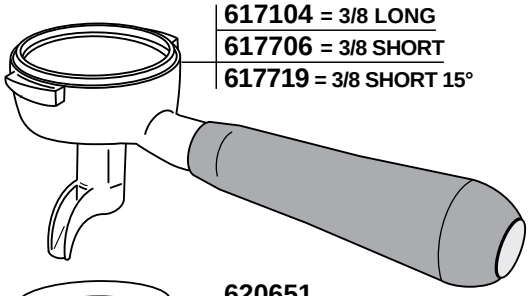

617104 = 3/8 LONG
617706 = 3/8 SHORT
617719 = 3/8 SHORT 15°

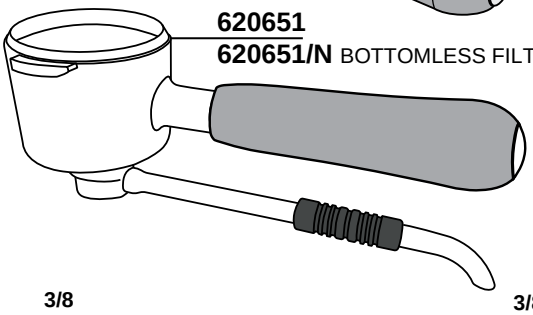

620651
620651/N BOTTOMLESS FILTER

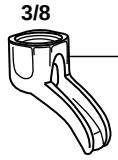

3/8
700024

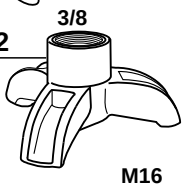

3/8
618522

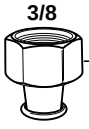

3/8
502003=SHORT
615599=LONG



617346=SHORT
617345=LONG
M16

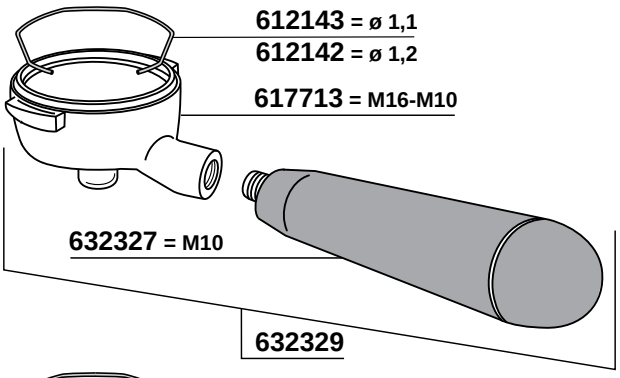

612143 = ø 1,1
612142 = ø 1,2
617713 = M16-M10
632327 = M10
632329

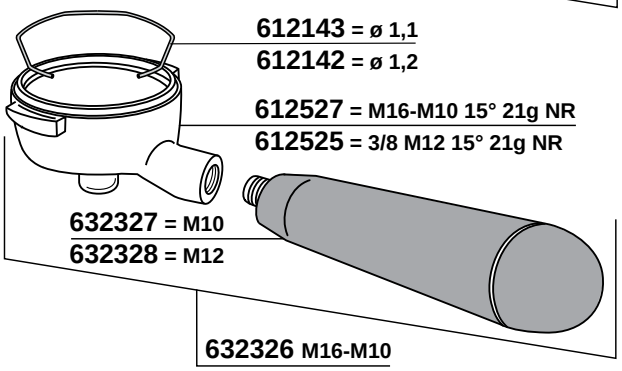

612143 = ø 1,1
612142 = ø 1,2
612527 = M16-M10 15° 21g NR
612525 = 3/8 M12 15° 21g NR
632327 = M10
632328 = M12
632326 M16-M10

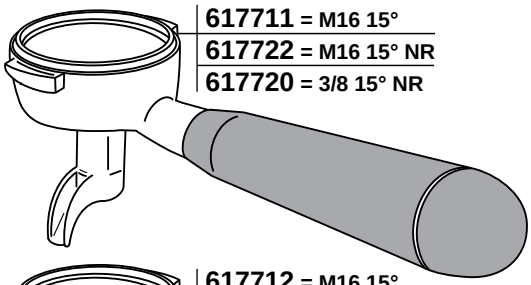

617711 = M16 15°
617722 = M16 15° NR
617720 = 3/8 15° NR

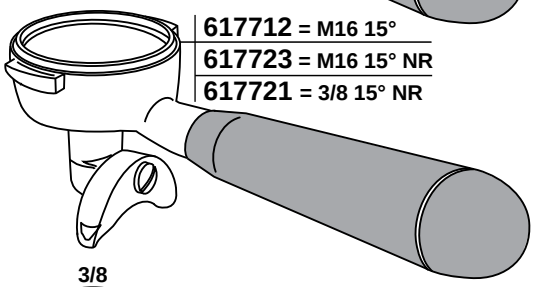

617712 = M16 15°
617723 = M16 15° NR
617721 = 3/8 15° NR



3/8
511672=SHORT
591733=LONG



M16
630086

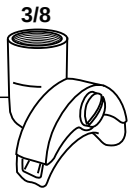

3/8
630086/8



M16
630087



3/8
630087/8

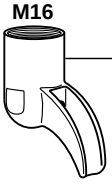

M16
630085

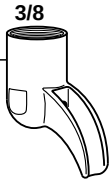

3/8
630085/8

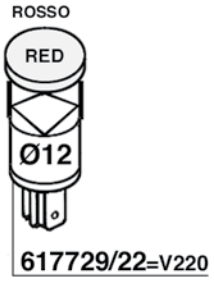

617729/22=V220



617732=V220
617732/11=V110



617730=V220
617730/11=V110

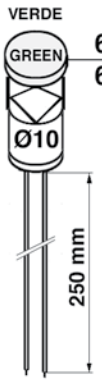

615512=V220
615512/11=V110

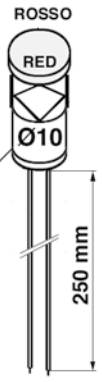

615511/22=V220
615511/11=V110

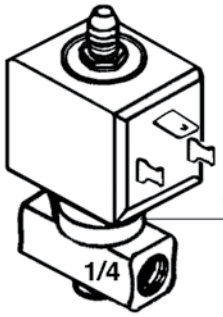

632018/22=V220
632018/11=V110

CAPPUCCINATORE

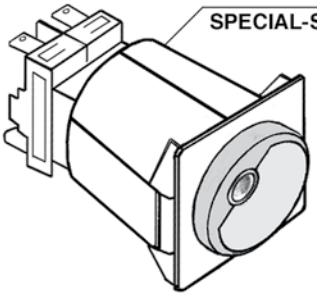

630381
SPECIAL-STAR 2aS

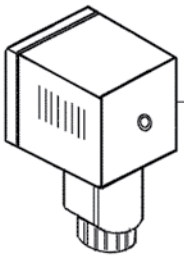

615978

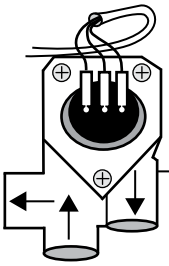

619593
GICAR

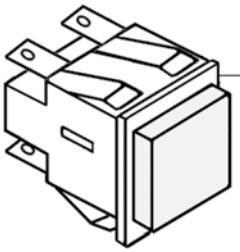

700180
STAR 1aS

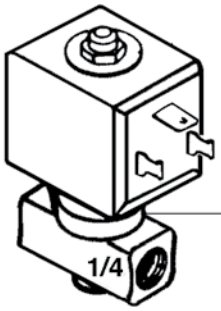

632017/22=V220
632017/11=V110

ACQUA CALDA
SCALDATAZZE

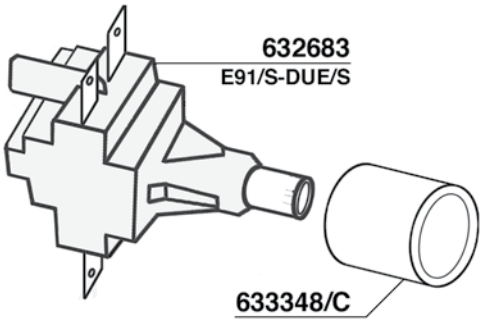

632683
E91/S-DUE/S

633348/C

E91 - DUE
N.STOP-STAR-TRONIC
SPECIAL-EXPRESS

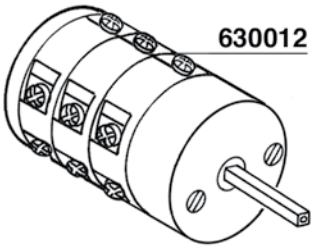

630012

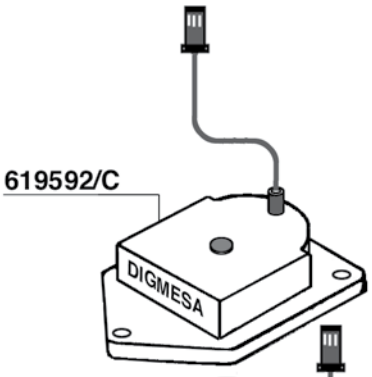

619592/C

530143

617903

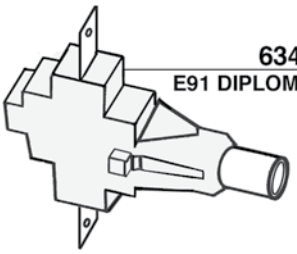

634027
E91 DIPLOMAT/S

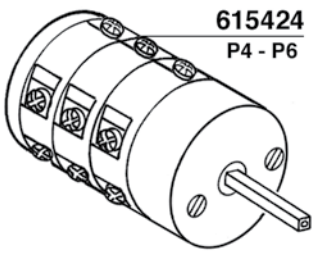

615424
P4 - P6

551937

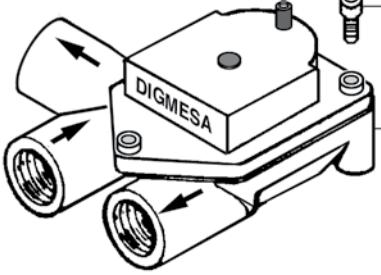

619592

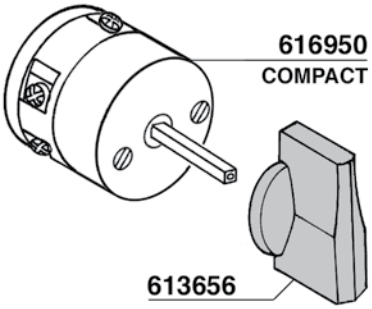

616950
COMPACT

613656

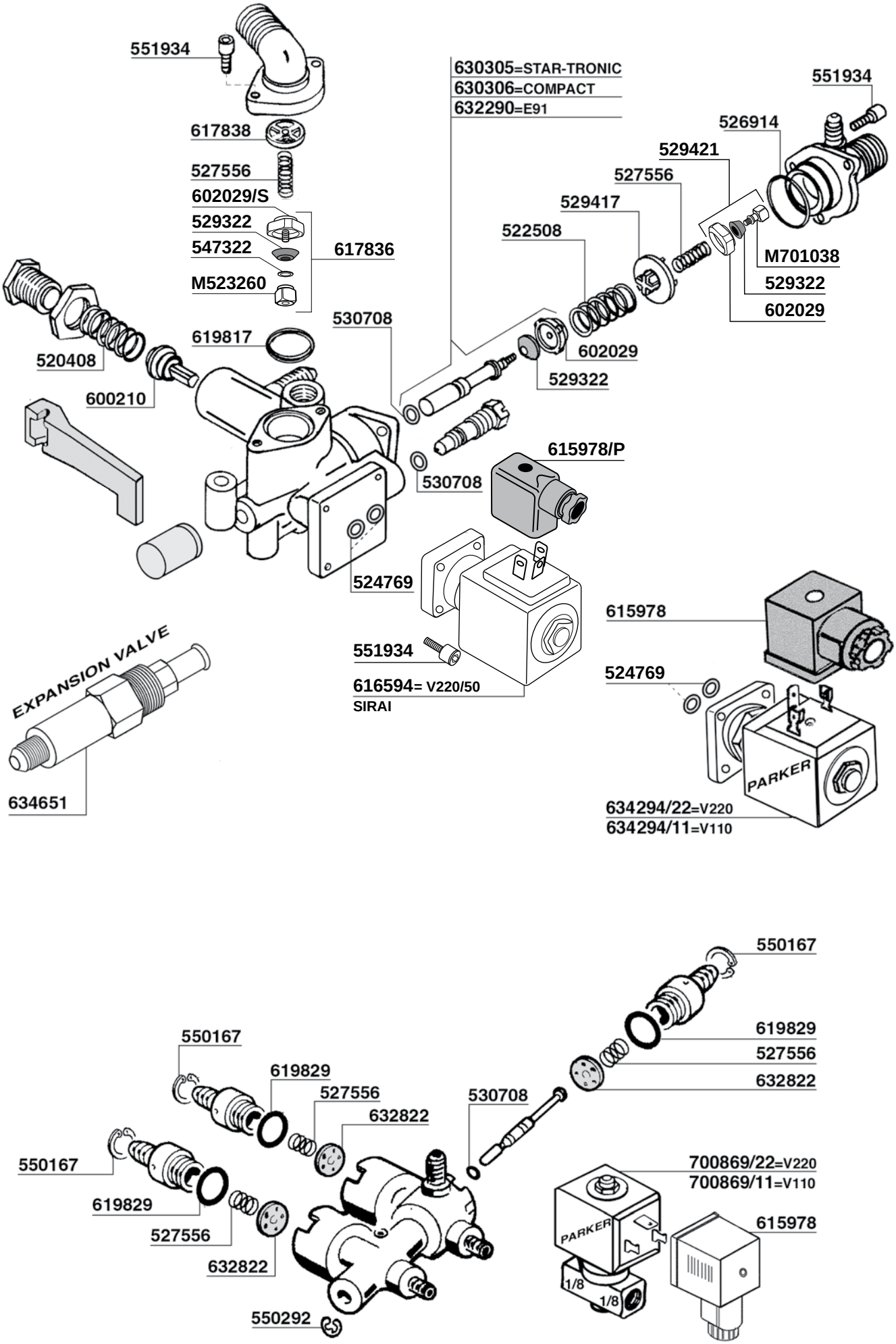
551934
617838
527556
602029/S
529322
547322
M523260
617836
630305=STAR-TRONIC
630306=COMPACT
632290=E91
551934
526914
529421
527556
529417
522508
M701038
529322
602029
602029
529322
530708
619817
520408
600210
615978/P
530708
524769
551934
616594= V220/50
SIRAI
EXPANSION VALVE
634651
615978
524769
PARKER
634294/22=V220
634294/11=V110
550167
619829
527556
632822
530708
550167
619829
527556
632822
550167
619829
527556
632822
550292
700869/22=V220
700869/11=V110
PARKER
1/8
1/8
615978

NUOVA RICAMBI PARTI COMPATIBILI FAEMA Tav. 06

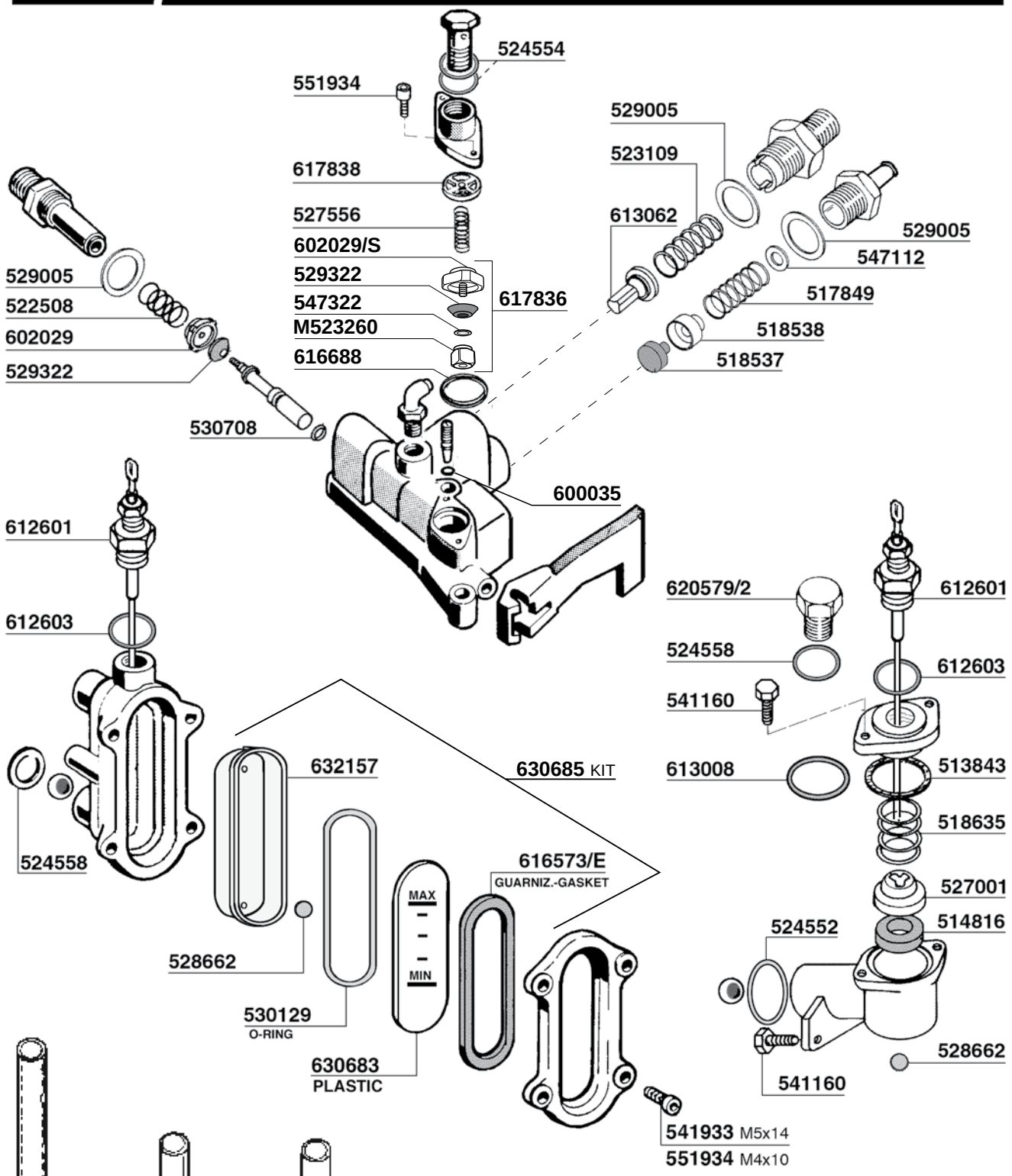

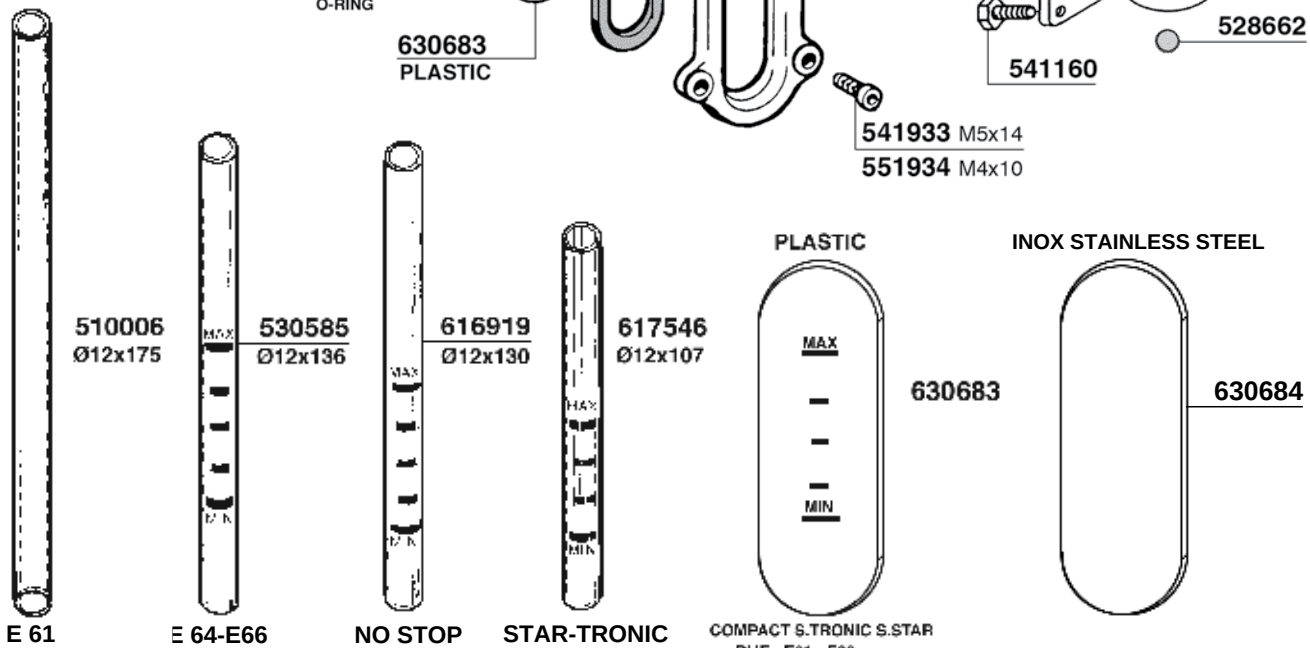

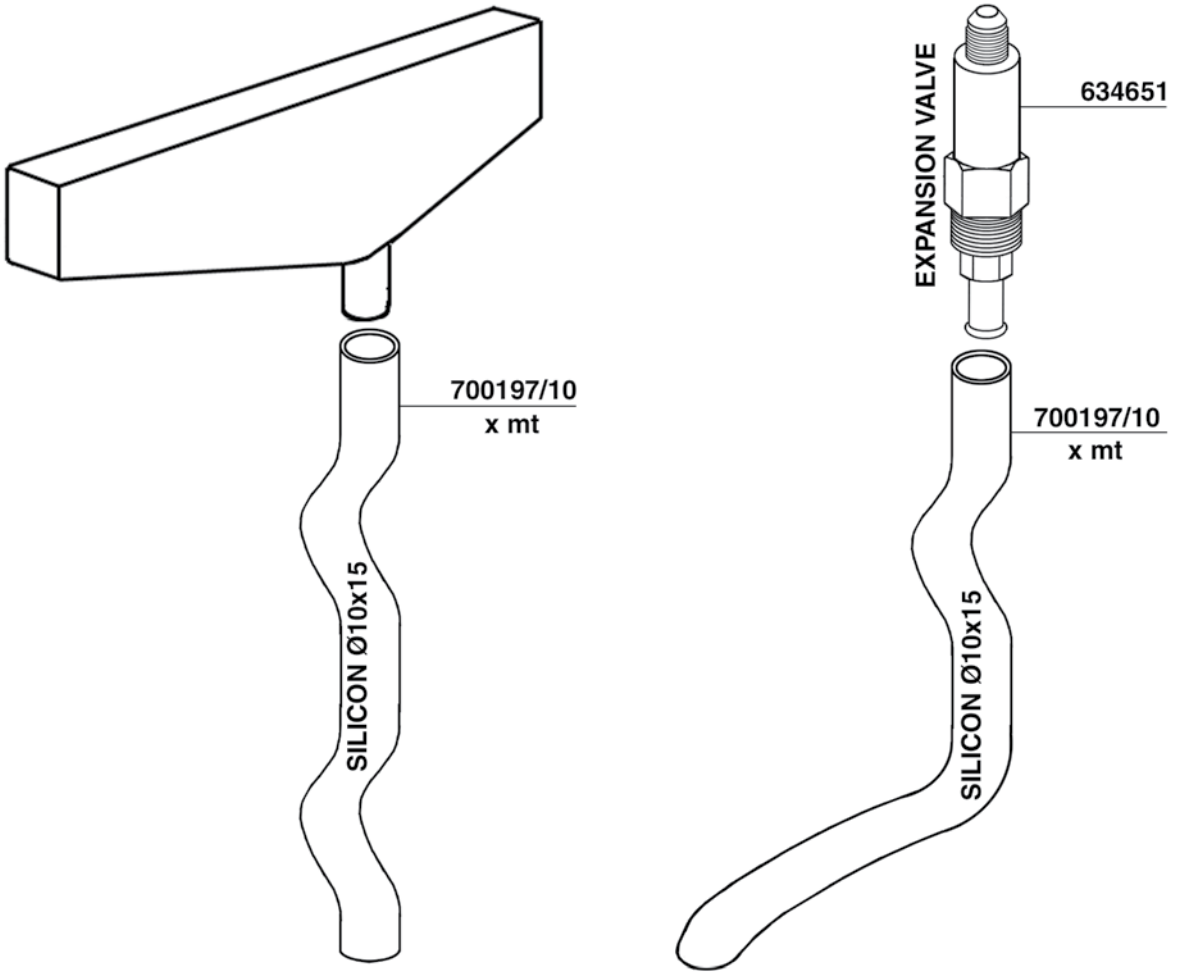
700197/10
x mt
SILICON Ø10x15
EXPANSION VALVE
634651
700197/10
x mt
SILICON Ø10x15

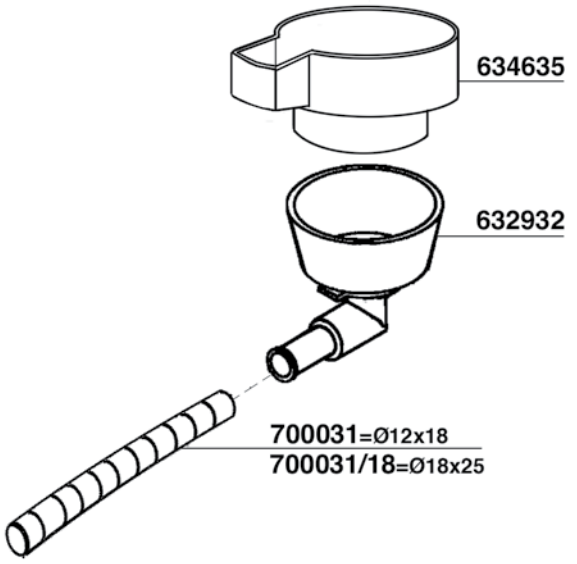
634635
632932
700031=Ø12x18
700031/18=Ø18x25

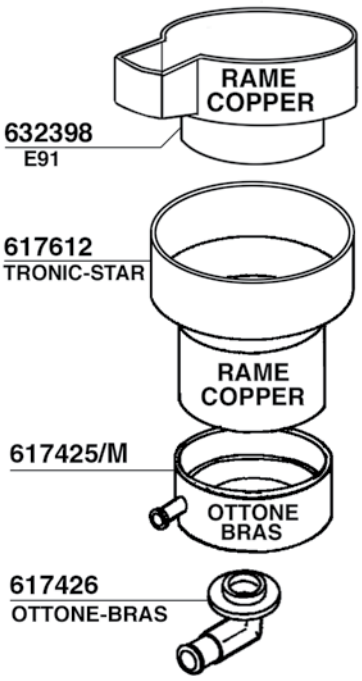
RAME
COPPER
632398
E91
617612
TRONIC-STAR
RAME
COPPER
617425/M
OTTONE
BRAS
617426
OTTONE-BRAS

NUOVA RICAMBI PARTI COMPATIBILI FAEMA Tav. 08

N. STOP-COMPACT

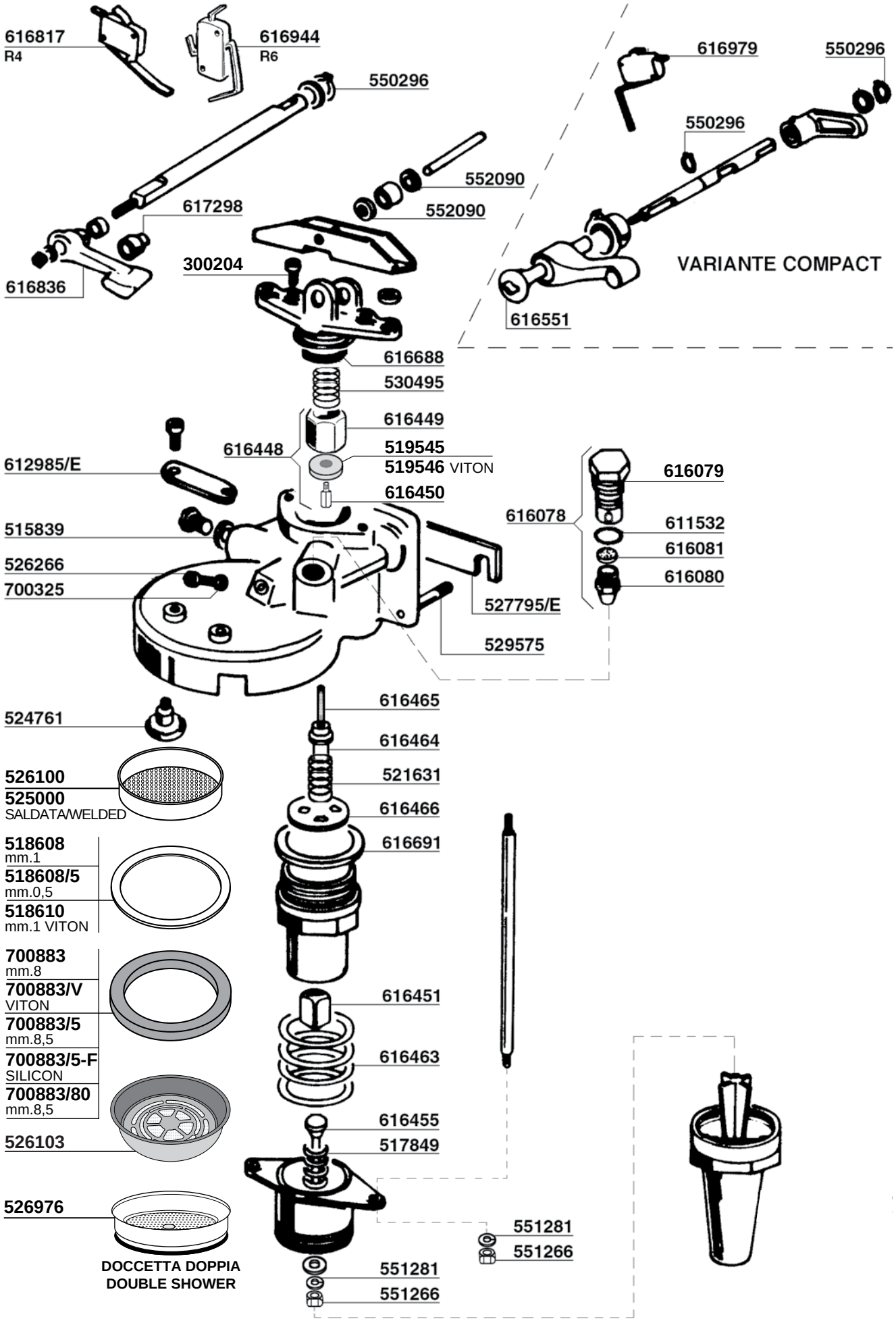

P4/P6 - E64/E66

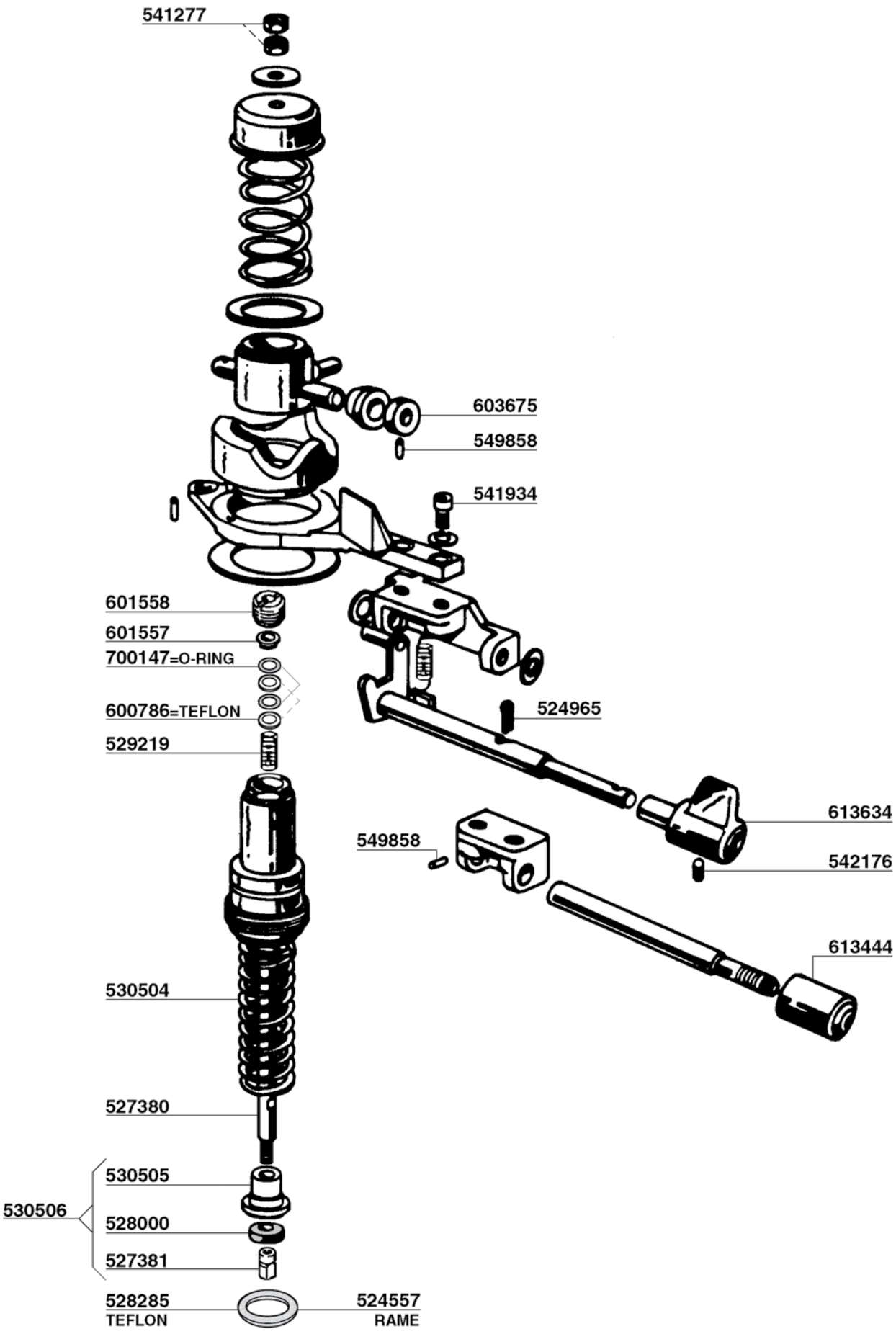
541277
603675
549858
541934
601558
601557
700147=O-RING
600786=TEFLON
529219
524965
613634
549858
542176
613444
530504
527380
530505
530506
528000
527381
528285
TEFLON
524557
RAME

P4/P6 - E64/E66

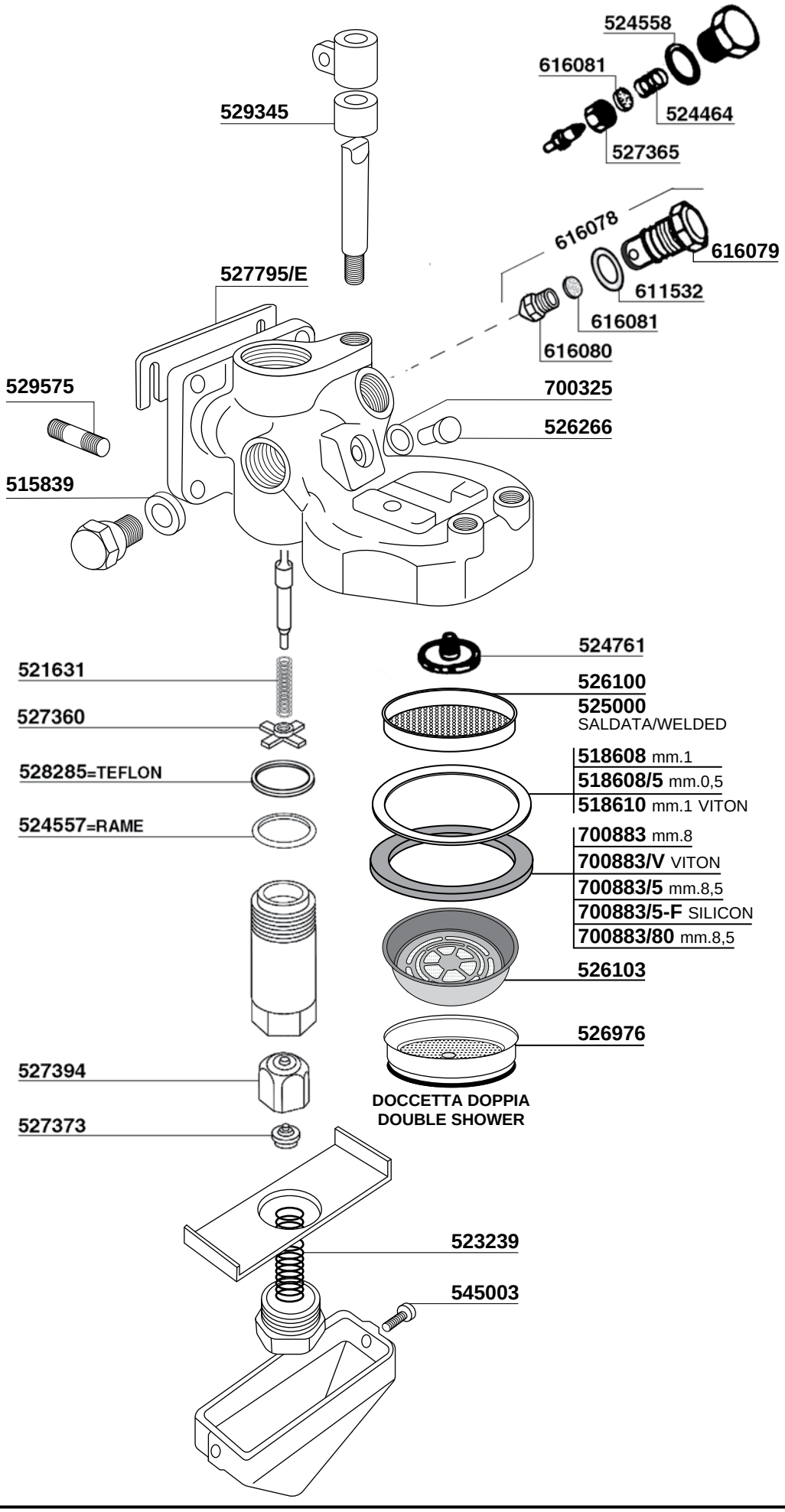
524558
616081
524464
527365
529345
616078
616079
611532
616081
616080
527795/E
529575
700325
526266
515839
524761
526100
525000
SALDATA/WELDED
521631
527360
518608 mm.1
518608/5 mm.0,5
518610 mm.1 VITON
528285=TEFLON
524557=RAME
700883 mm.8
700883/V VITON
700883/5 mm.8,5
700883/5-F SILICON
700883/80 mm.8,5
526103
526976
527394
527373
DOCCETTA DOPPIA
DOUBLE SHOWER
523239
545003

P6 - E66

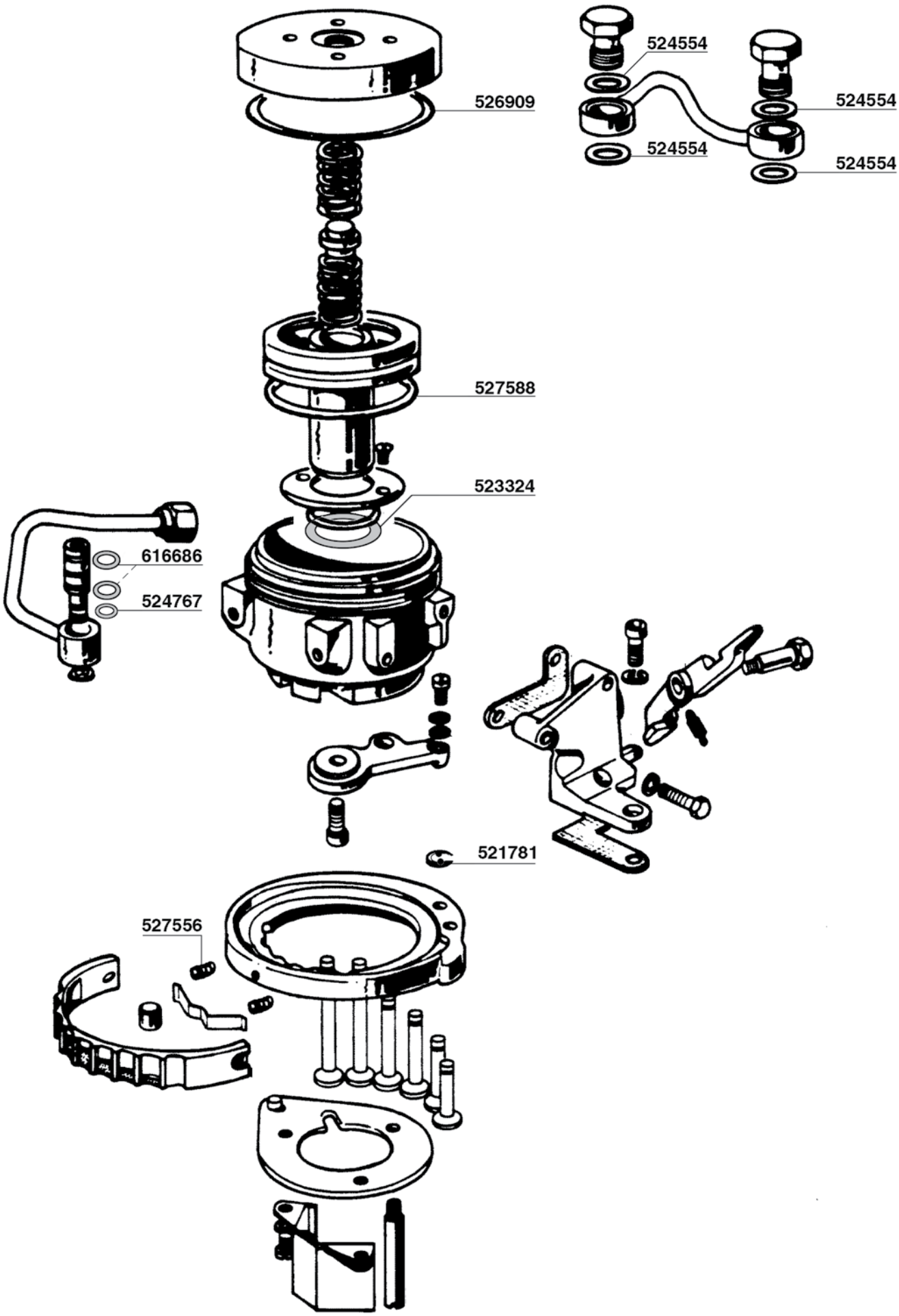
526909
524554
524554
524554
524554
527588
523324
616686
524767
521781
527556

NO STOP/A - P6

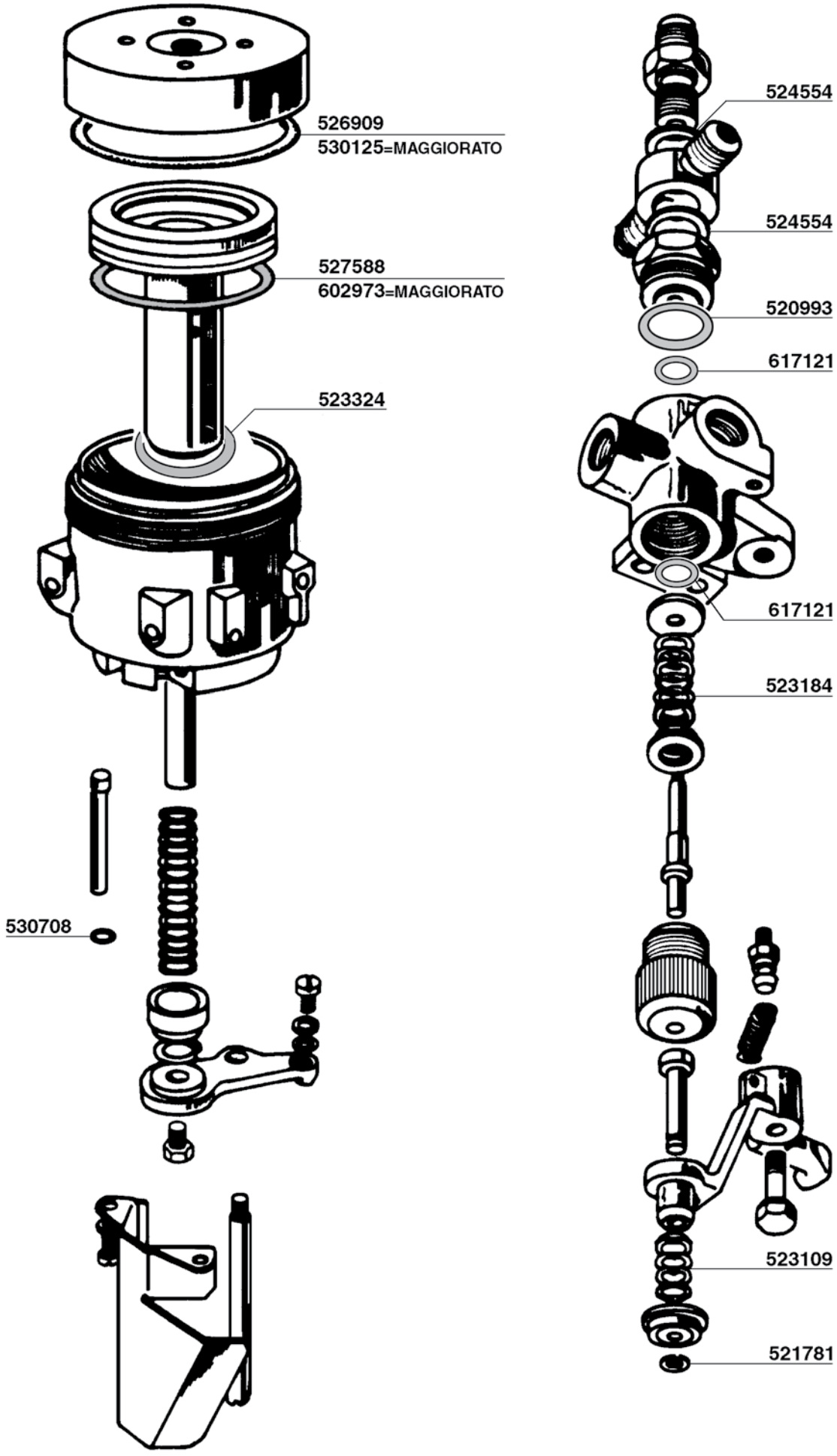
526909
530125=MAGGIORATO
527588
602973=MAGGIORATO
523324
530708
524554
524554
520993
617121
617121
523184
523109
521781

E61 - ARIETE

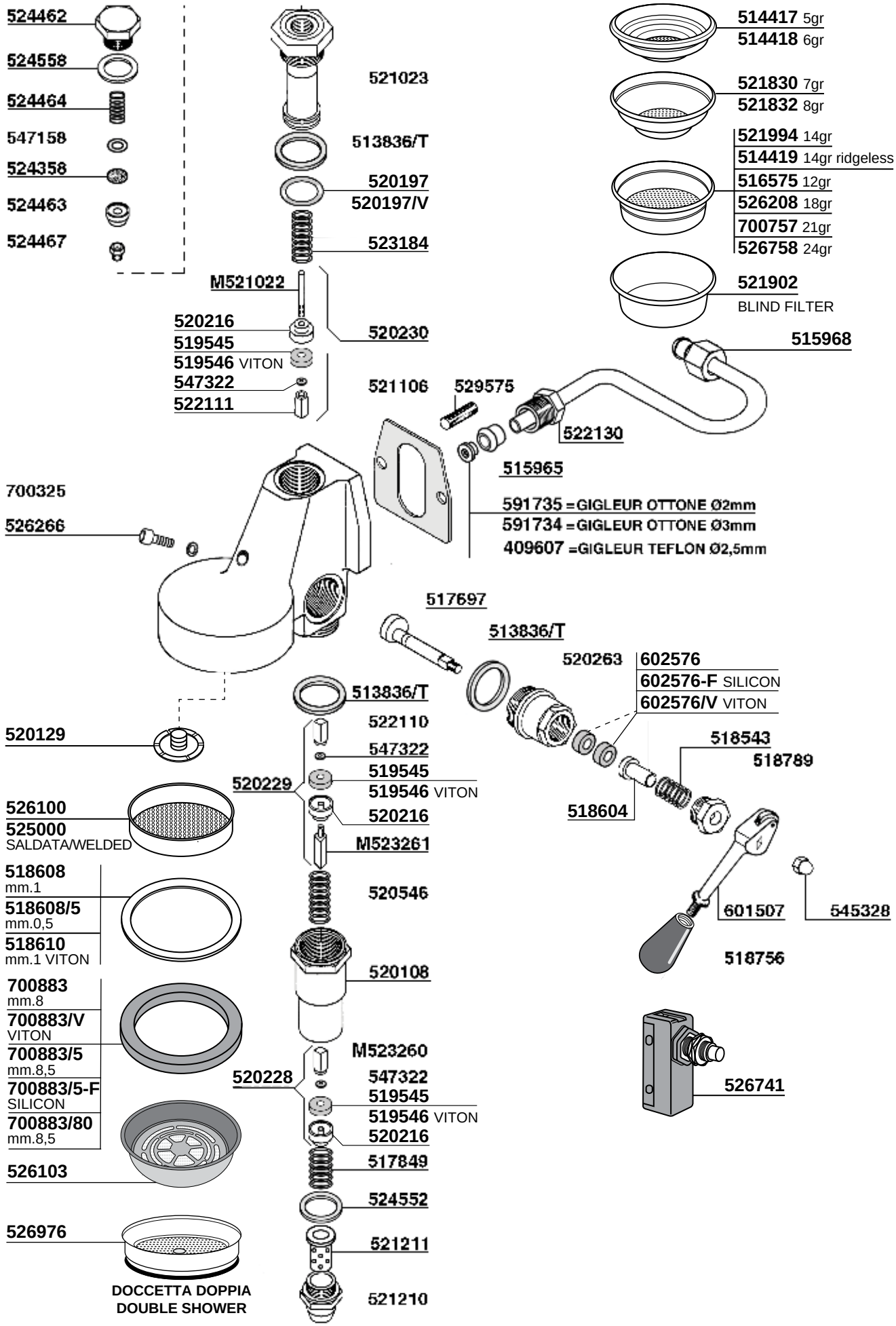
524462
524558
524464
547158
524358
524463
524467
521023
513836/T
520197
520197/V
523184
M521022
520216
519545
519546 VITON
547322
522111
520230
521106
529575
522130
515968
514417 5gr
514418 6gr
521830 7gr
521832 8gr
521994 14gr
514419 14gr ridgeless
516575 12gr
526208 18gr
700757 21gr
526758 24gr
521902
BLIND FILTER
700325
526266
515965
591735 =GIGLEUR OTTONE Ø2mm
591734 =GIGLEUR OTTONE Ø3mm
409607 =GIGLEUR TEFLON Ø2,5mm
517697
513836/T
520263
602576
602576-F SILICON
602576/V VITON
518543
518789
518604
513836/T
522110
547322
519545
519546 VITON
520216
M523261
520229
520129
526100
525000
SALDATA/WELDED
518608
mm.1
518608/5
mm.0,5
518610
mm.1 VITON
520546
520108
700883
mm.8
700883/V
VITON
700883/5
mm.8,5
700883/5-F
SILICON
700883/80
mm.8,5
526103
M523260
520228
547322
519545
519546 VITON
520216
517849
524552
521211
521210
526976
DOCCETTA DOPPIA
DOUBLE SHOWER
601507
545328
518756
526741

ZODIACO - T1

150

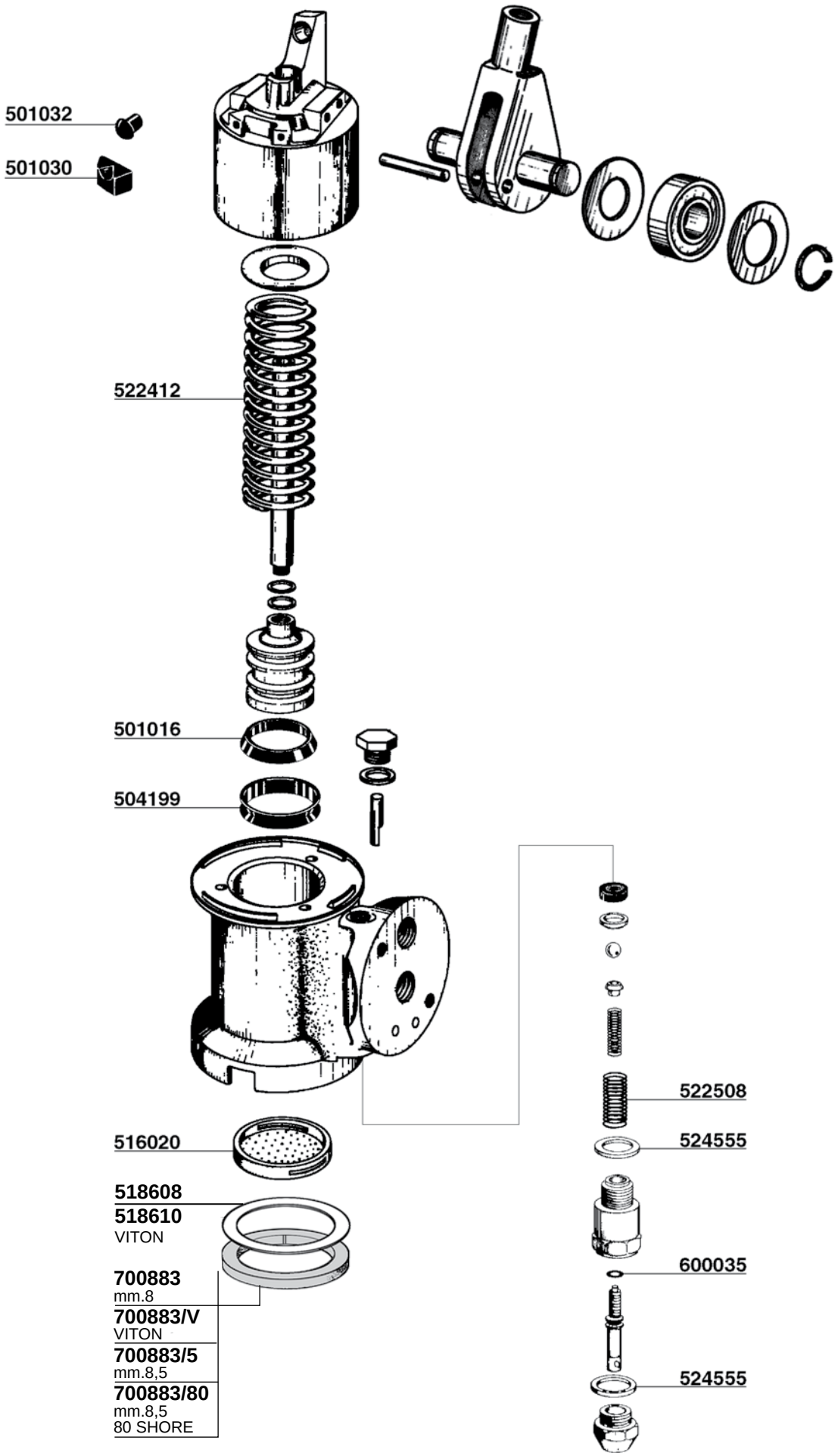

N.STOP-COMPACT - EXPRESS-TRONIC

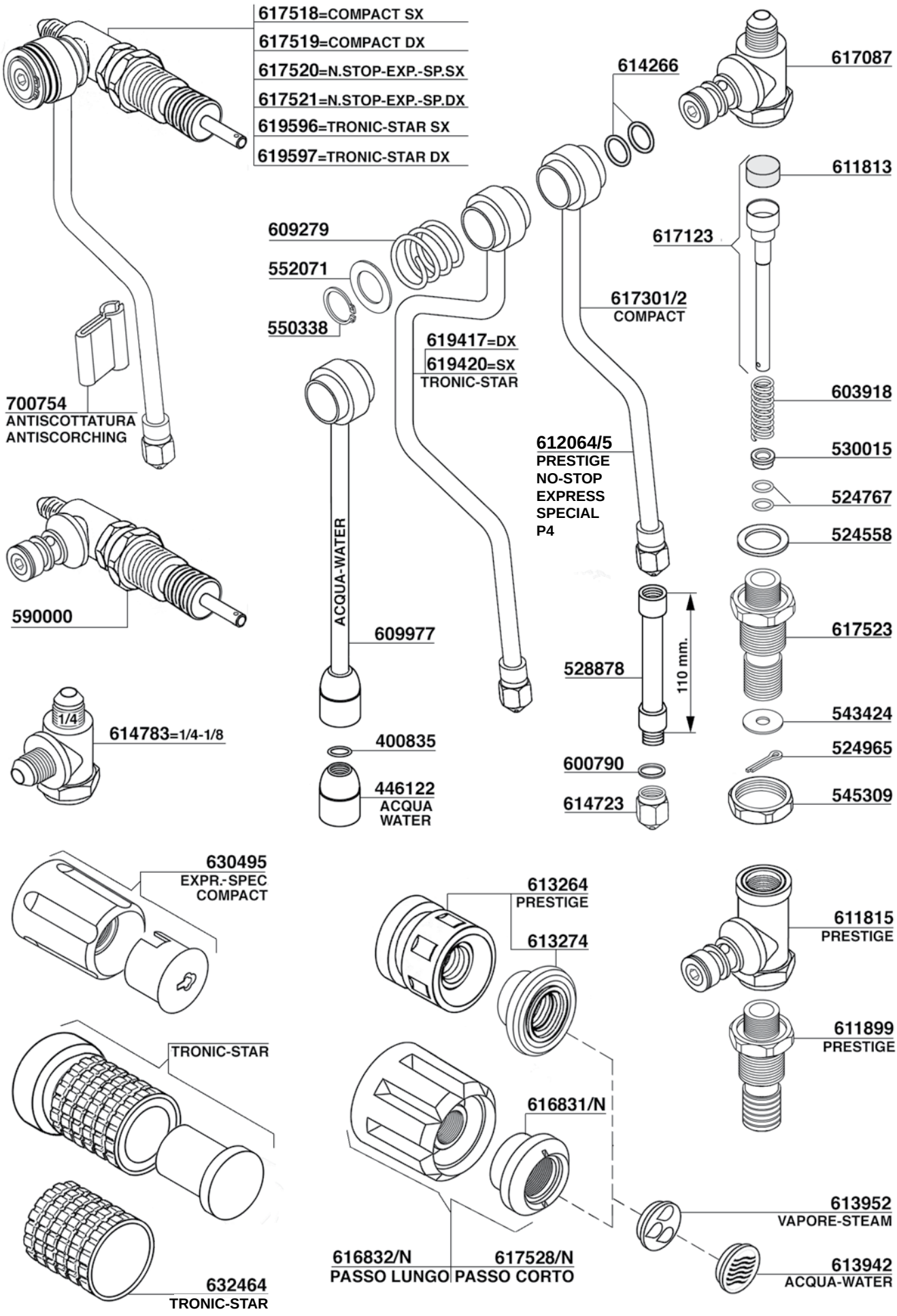

NUOVA RICAMBI PARTI COMPATIBILI FAEMA Tav.16

E91 - DUE - DIPLOMAT

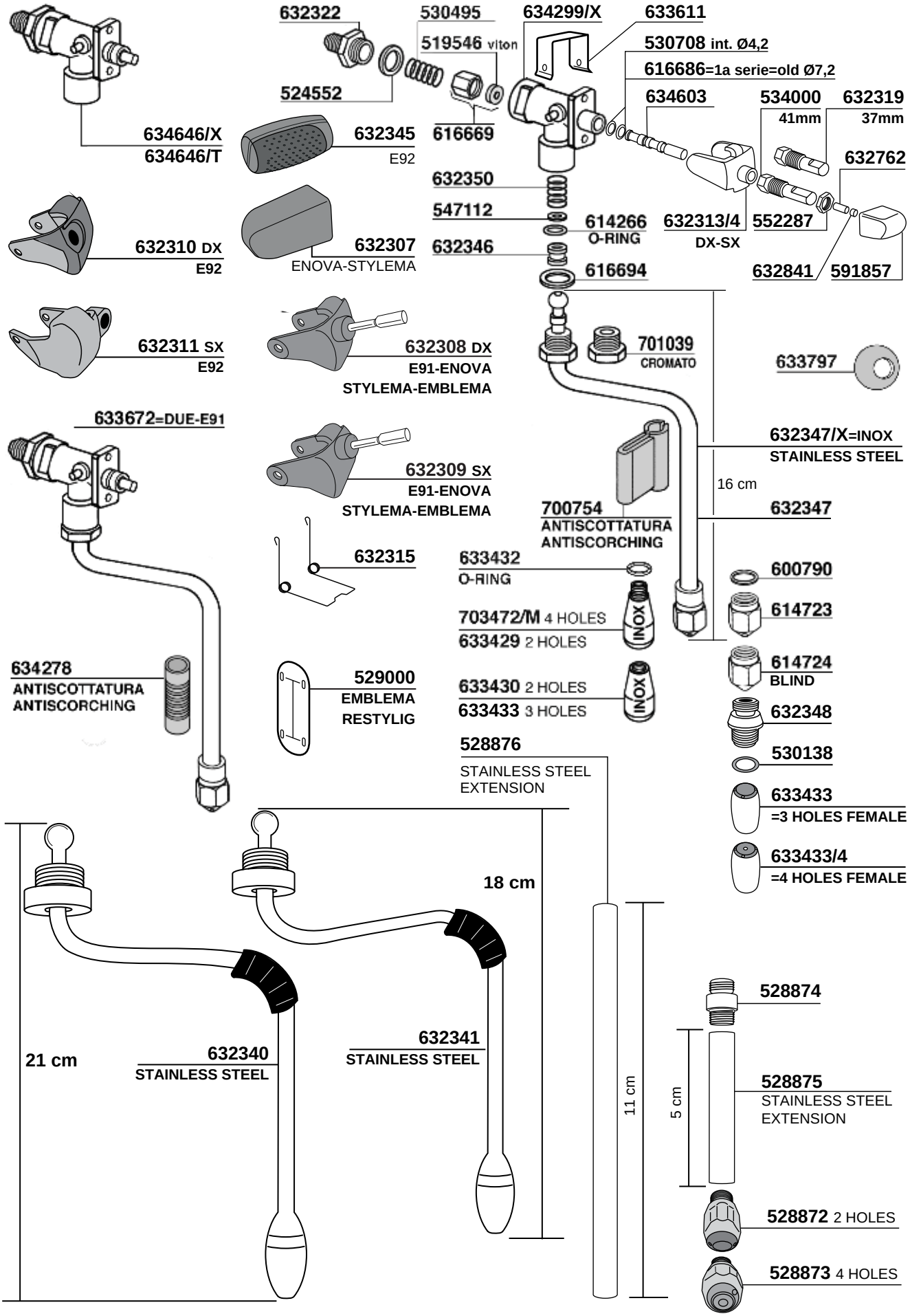

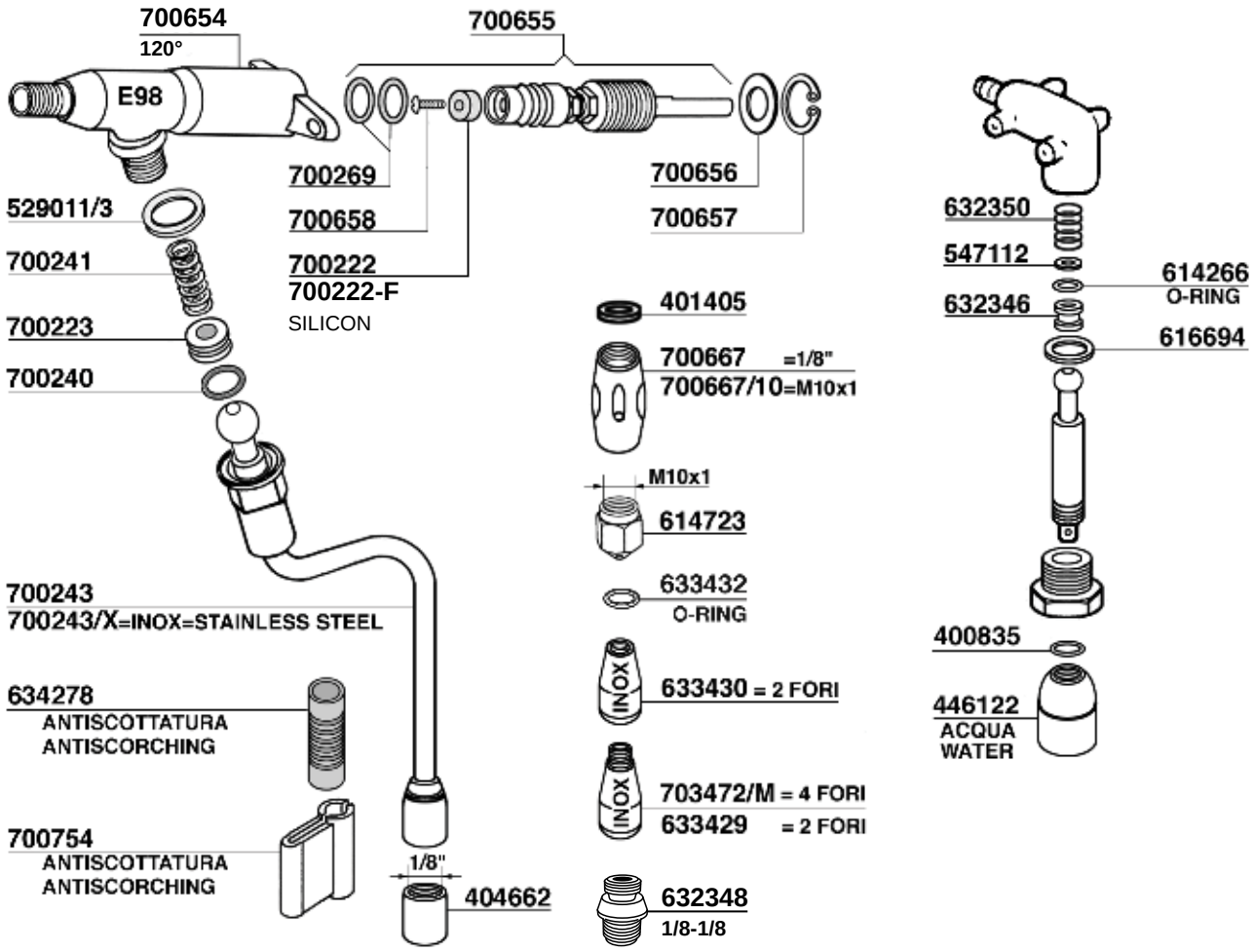
700654
120°
E98
700655
700269
700658
700222
700222-F
SILICON
700656
700657
529011/3
700241
700223
700240
700243
700243/X=INOX=STAINLESS STEEL
634278
ANTISCOTTATURA
ANTISCORCHING
700754
ANTISCOTTATURA
ANTISCORCHING
1/8"
404662
401405
700667 =1/8"
700667/10=M10x1
M10x1
614723
633432
O-RING
INOX
633430 = 2 FORI
INOX
703472/M = 4 FORI
633429 = 2 FORI
632348
1/8-1/8
632350
547112
614266
O-RING
632346
616694
400835
446122
ACQUA
WATER

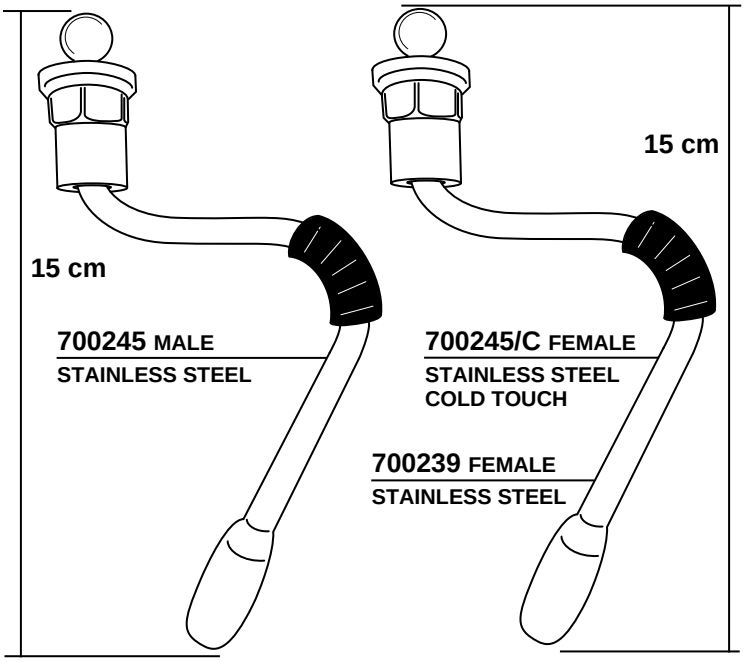
15 cm
15 cm
700245 MALE
STAINLESS STEEL
700245/C FEMALE
STAINLESS STEEL
COLD TOUCH
700239 FEMALE
STAINLESS STEEL

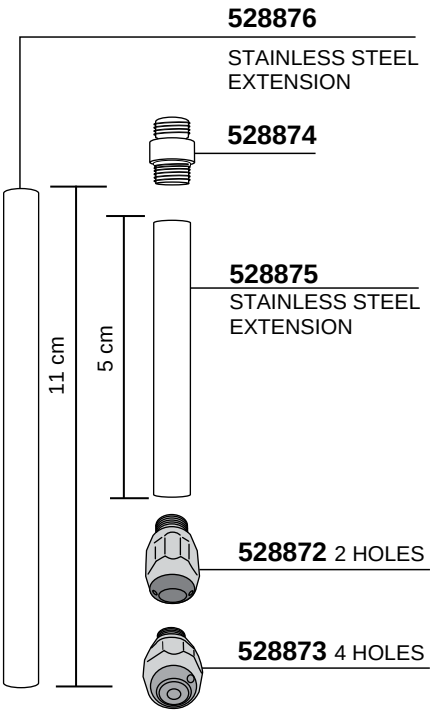
528876
STAINLESS STEEL
EXTENSION
528874
11 cm
5 cm
528875
STAINLESS STEEL
EXTENSION
528872 2 HOLES
528873 4 HOLES

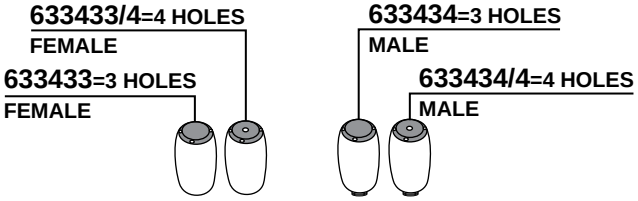
633433/4=4 HOLES
FEMALE
633433=3 HOLES
FEMALE
633434=3 HOLES
MALE
633434/4=4 HOLES
MALE

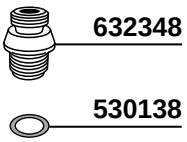
632348
530138

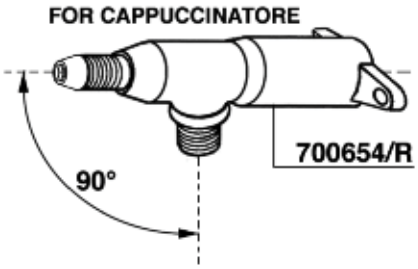
FOR CAPPUCCINATORE
90°
700654/R

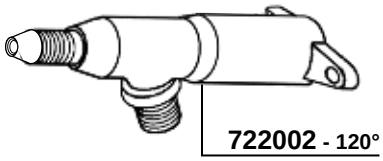
722002 - 120°

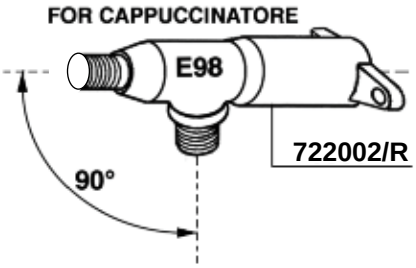
FOR CAPPUCCINATORE
E98
90°
722002/R

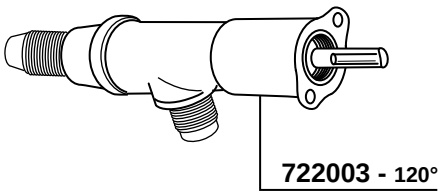
722003 - 120°

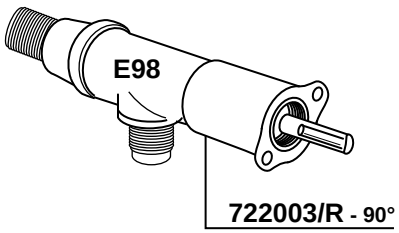
E98
722003/R - 90°

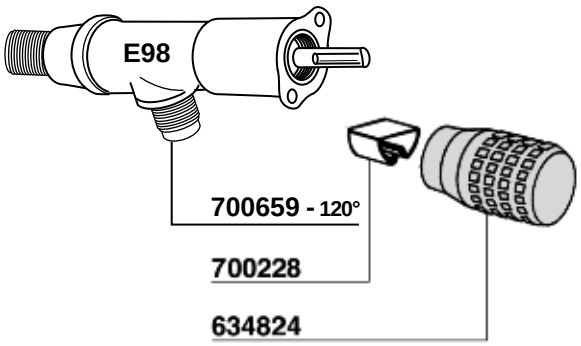
E98
700659 - 120°
700228
634824

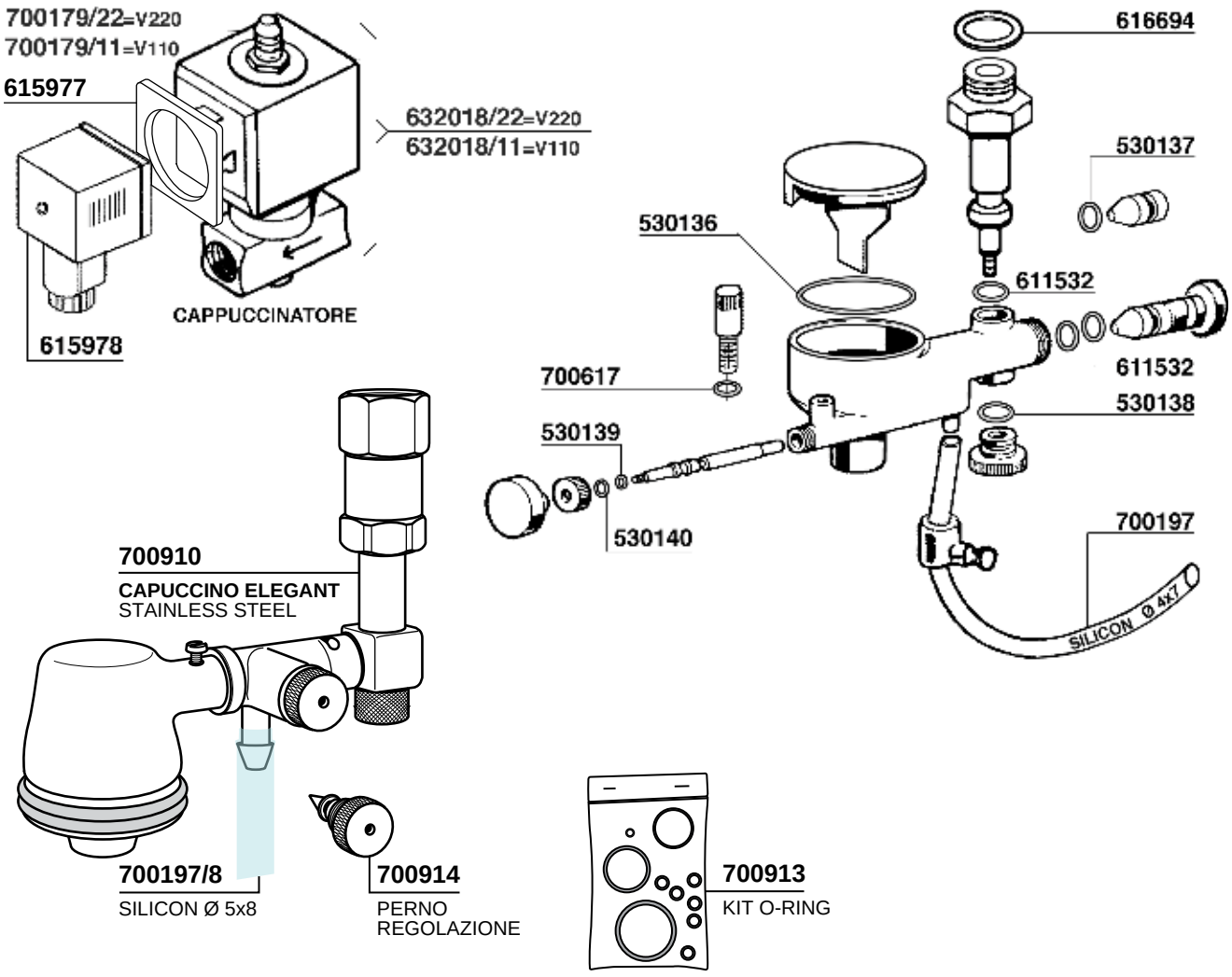
700179/22=V220
700179/11=V110
615977
632018/22=V220
632018/11=V110
CAPPUCCINATORE
615978
616694
530137
530136
611532
611532
700617
530138
530139
530140
700197
SILICON Ø 4x7
700910
CAPUCCINO ELEGANT
STAINLESS STEEL
700197/8
SILICON Ø 5x8
700914
PERNO
REGOLAZIONE
700913
KIT O-RING

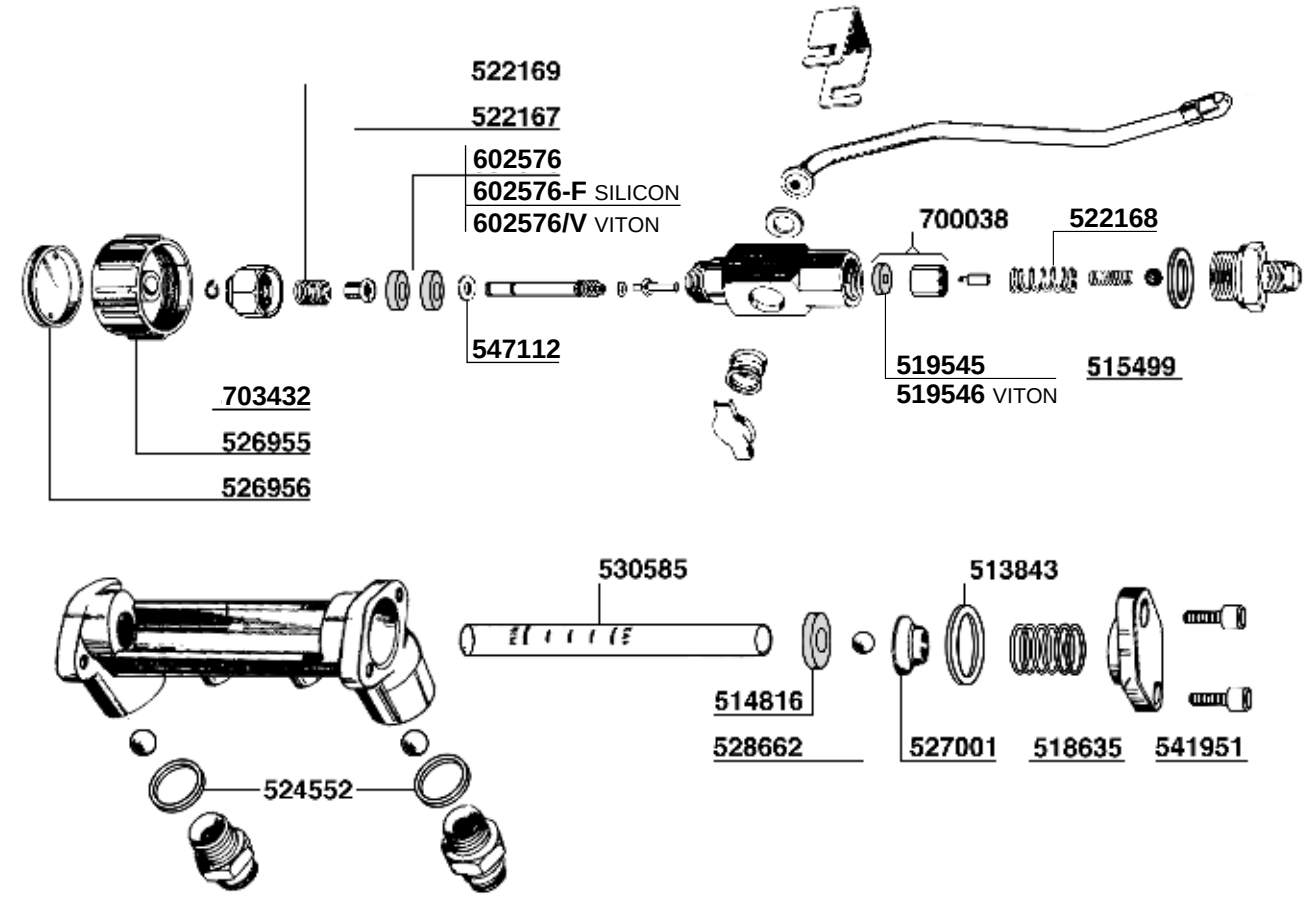
522169
522167
602576
602576-F SILICON
602576/V VITON
700038
522168
547112
519545
519546 VITON
515499
703432
526955
526956
530585
513843
514816
528662
527001
518635
541951
524552

E61-ARIETE-ZODIACO

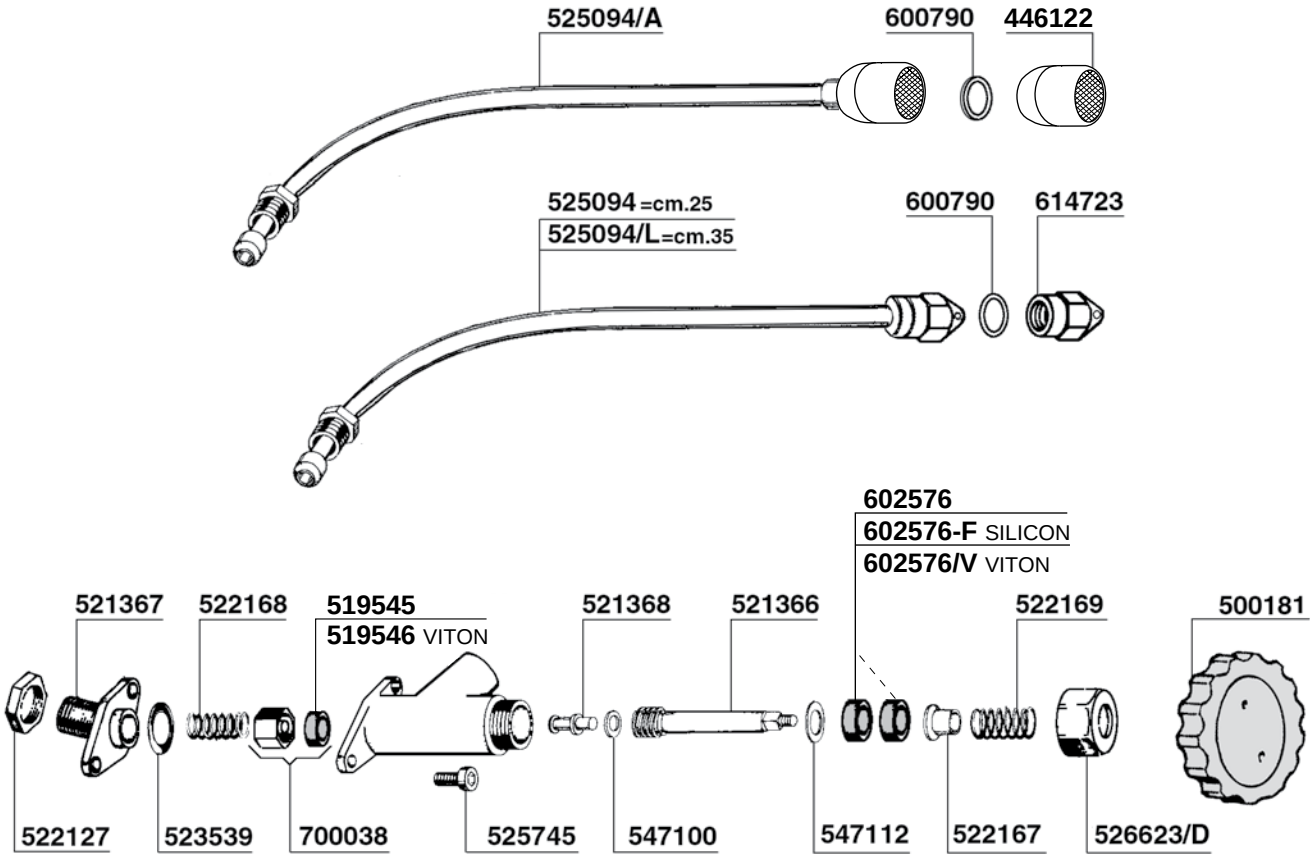

RUBINETTO CON TUBO SNODATO
STEAM / WATER VALVE WITH ARTICULATED PIPE

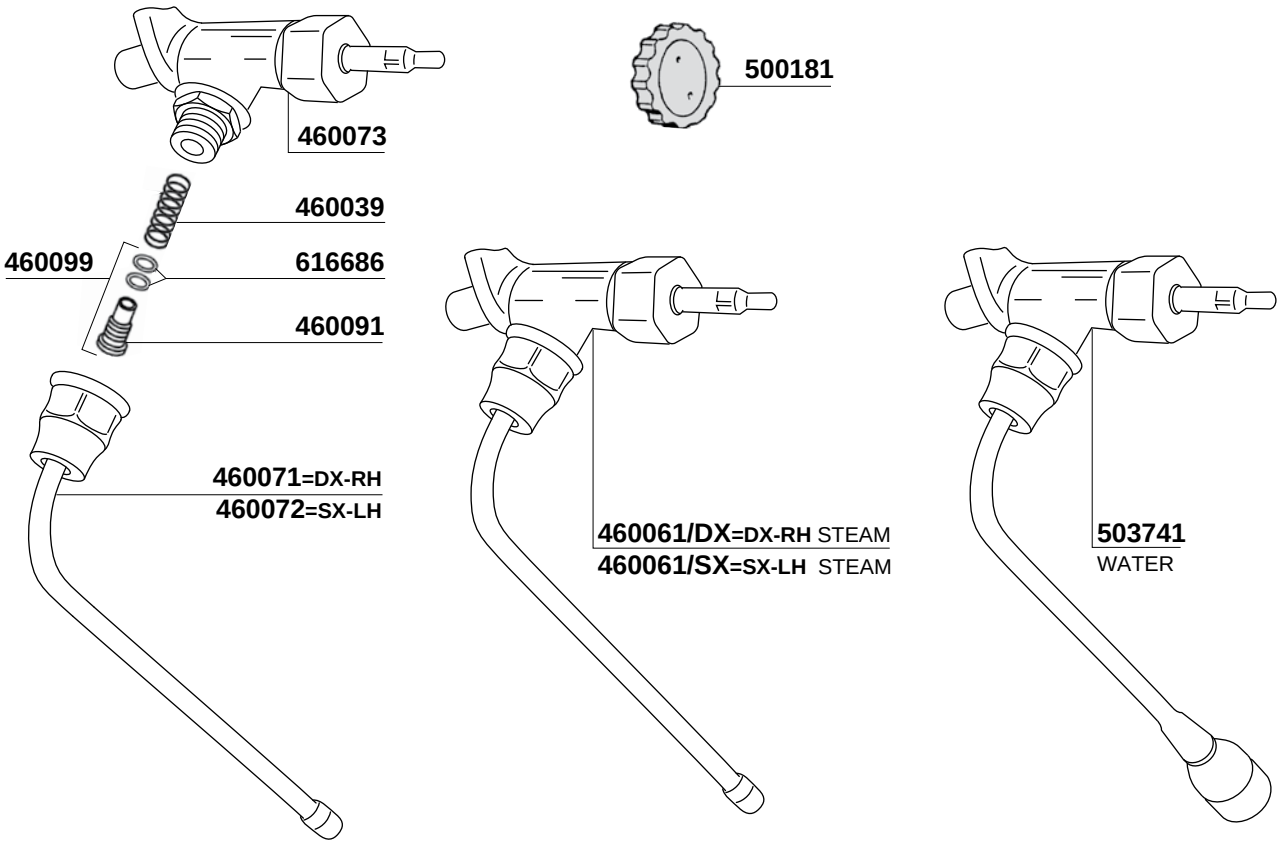

E61-ARIETE-ZODIACO

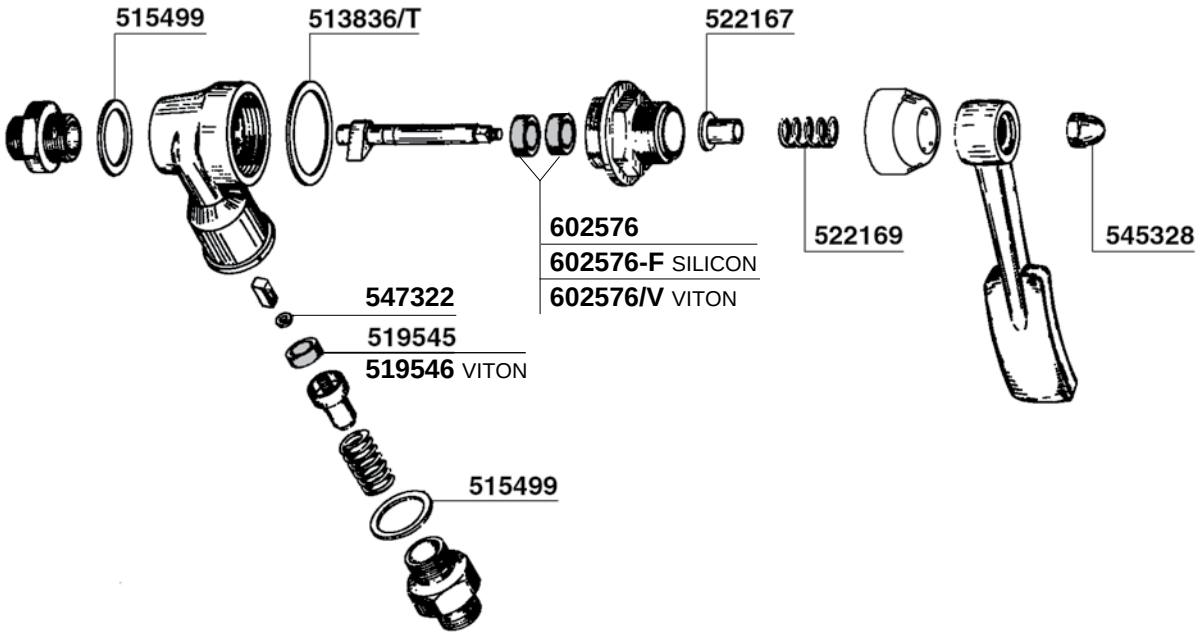

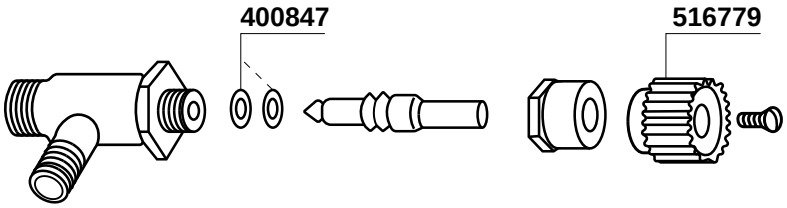

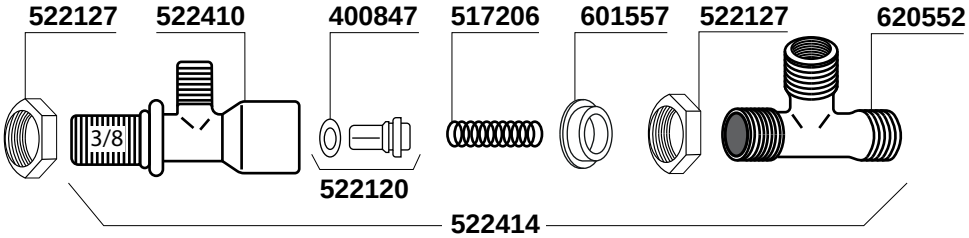

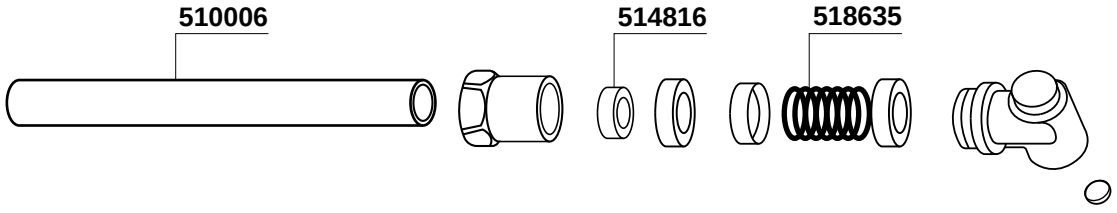

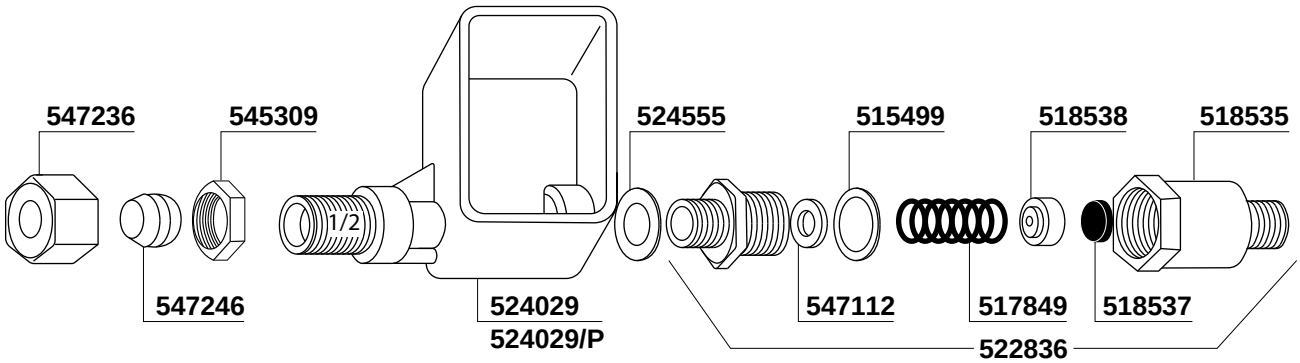

158

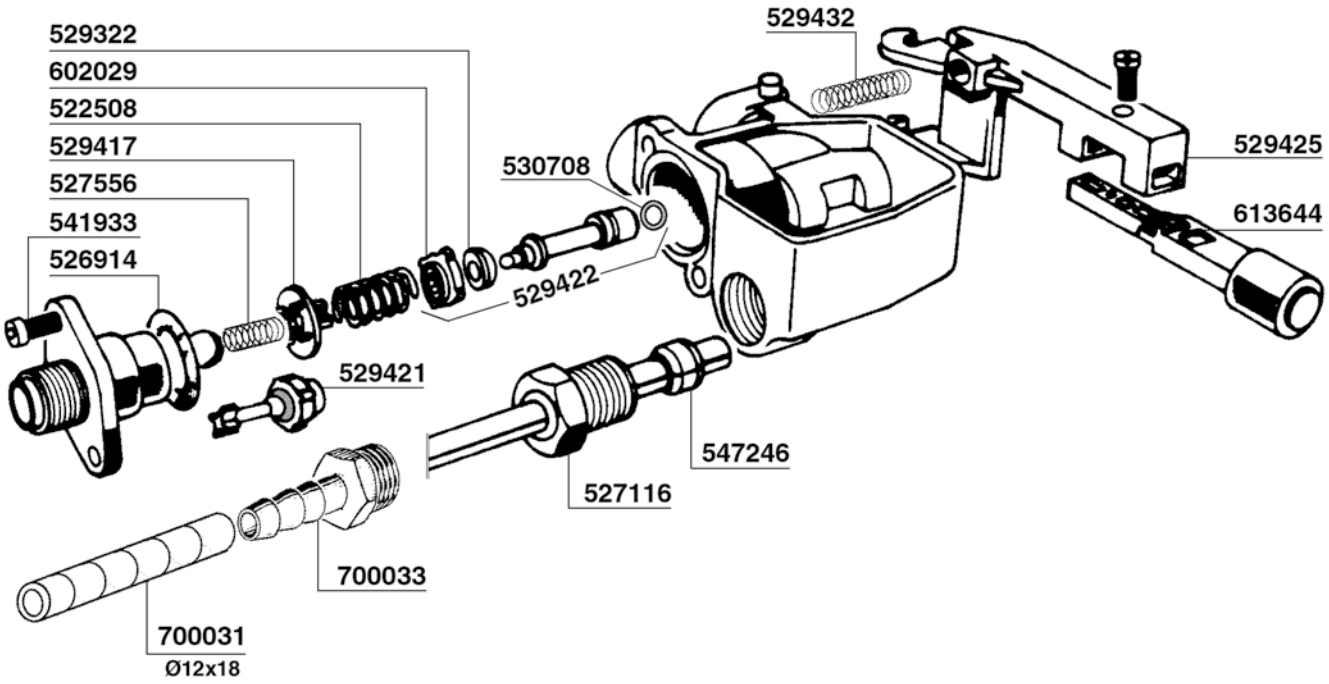
529322
602029
522508
529417
527556
541933
526914
530708
529432
529425
613644
529422
529421
547246
527116
700033
700031
Ø12x18

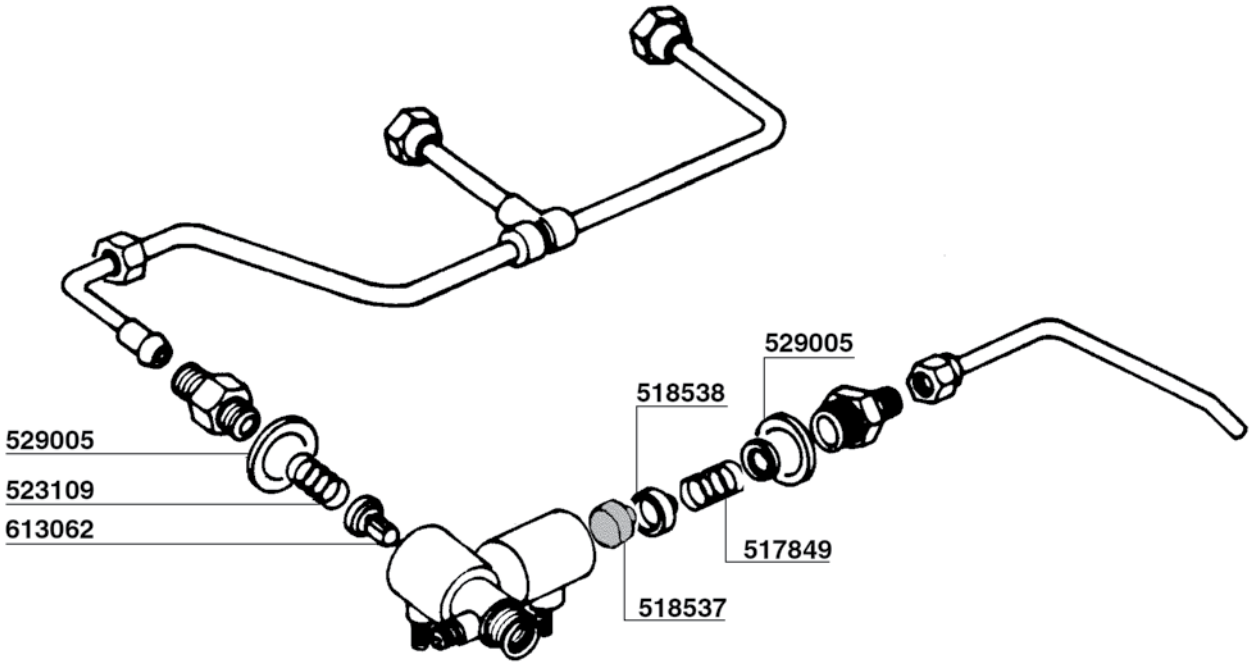
529005
518538
529005
523109
613062
517849
518537

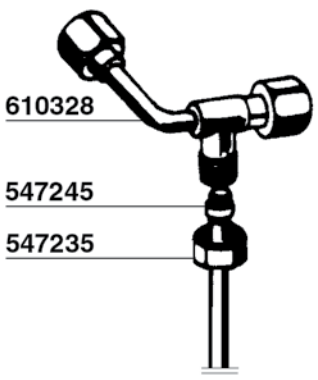
610328
547245
547235

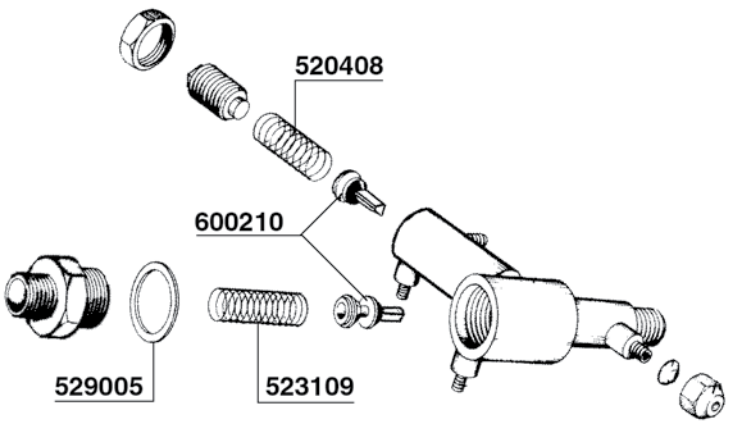
520408
600210
529005
523109

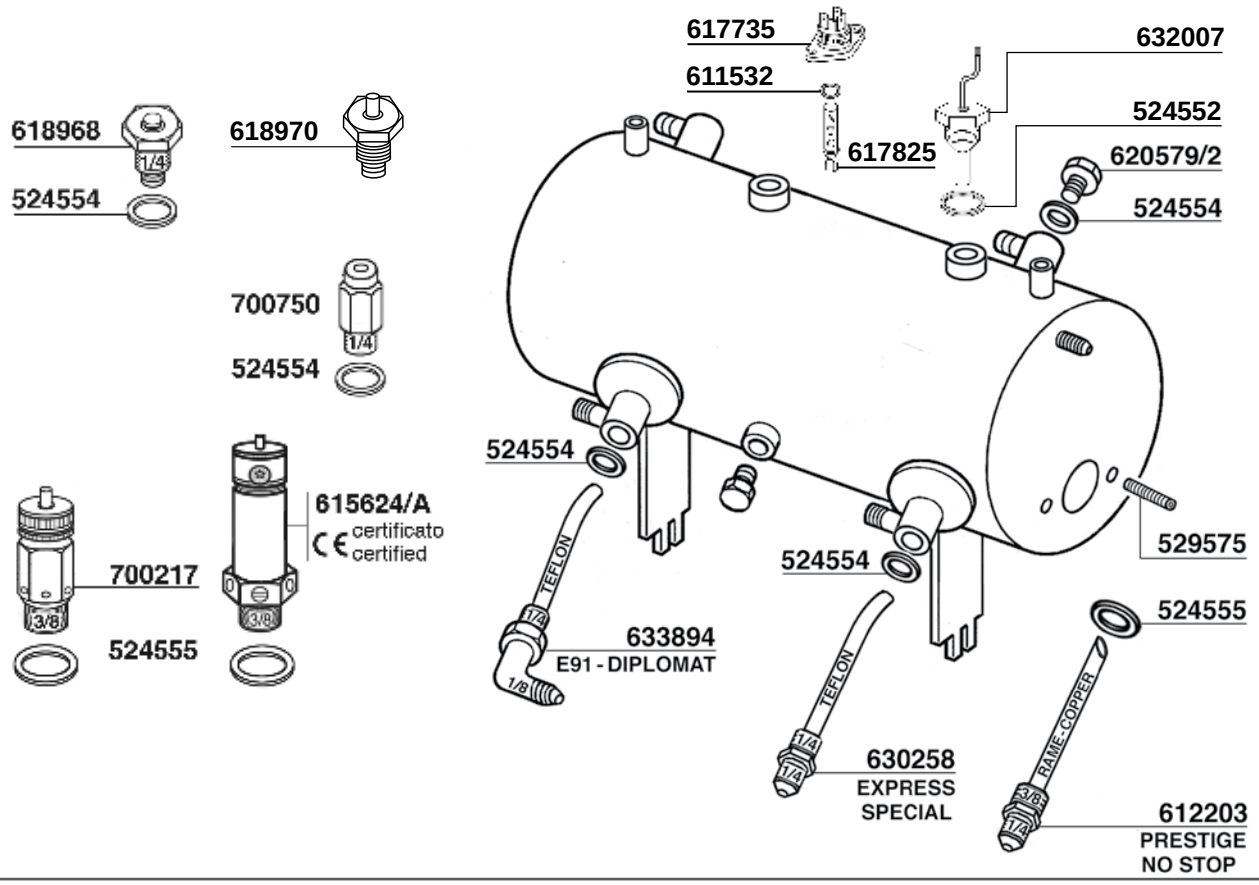
617735
611532
632007
524552
620579/2
524554
617825
618968
1/4
524554
618970
700750
1/4
524554
524554
615624/A
certificato
certified
700217
3/8
524555
3/8
TEFLON
1/8
633894
E91 - DIPLOMAT
1/8
524554
529575
524554
TEFLON
1/4
630258
EXPRESS
SPECIAL
524555
RAME-COPPER
3/8
1/4
612203
PRESTIGE
NO STOP

COMPACT

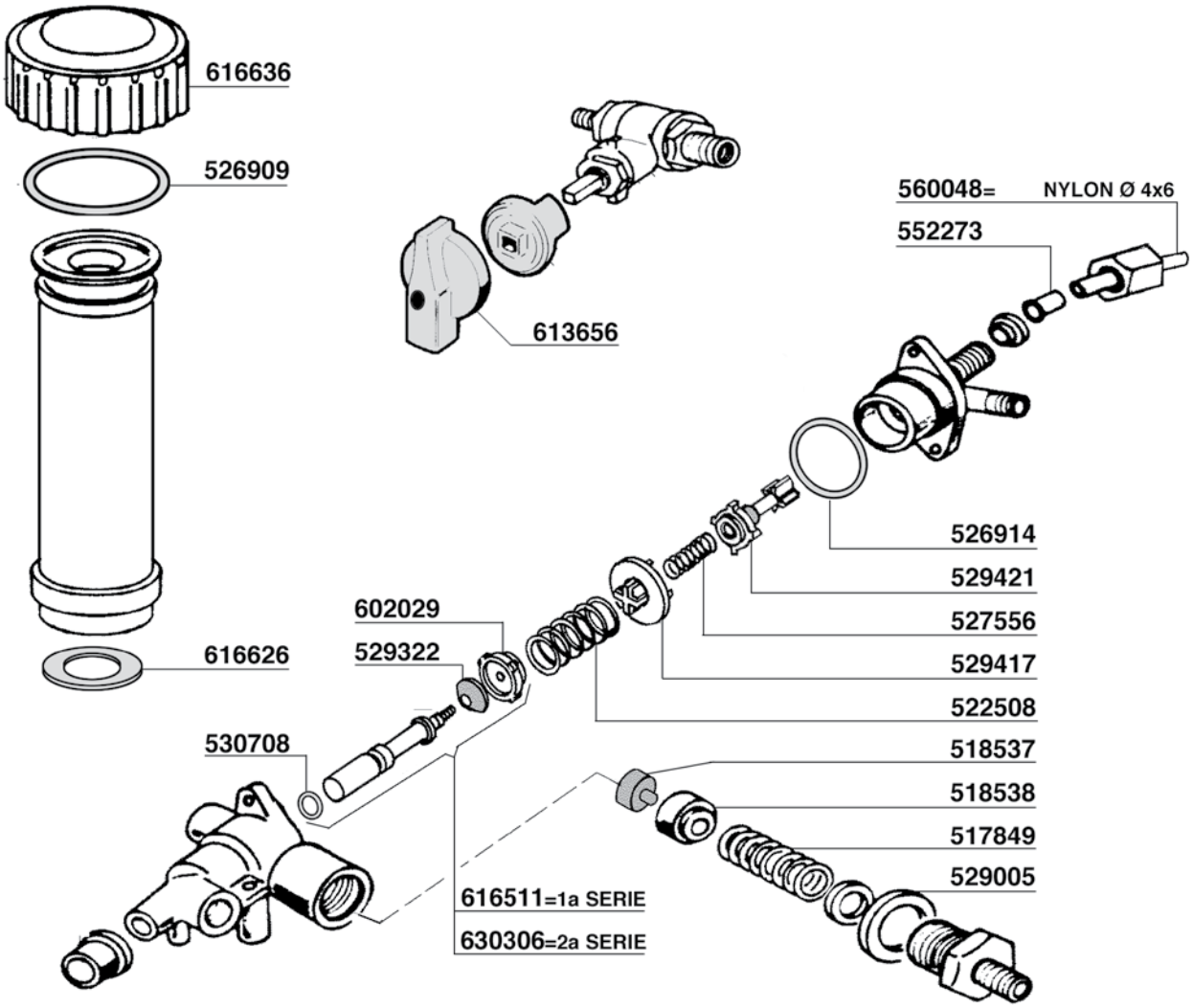
616636
526909
616626
613656
560048= NYLON Ø 4x6
552273
526914
529421
527556
529417
522508
518537
518538
517849
529005
602029
529322
530708
616511=1a SERIE
630306=2a SERIE

NUOVA RICAMBI PARTI COMPATIBILI FAEMA Tav. 24

E61-ARIETE-ZODIACO

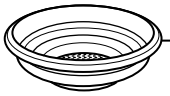

514417 5gr
514418 6gr



521830 7gr
521832 8gr

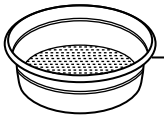

521994 14gr
514419 14gr ridgeless
516575 12gr
526208 18gr
700757 21gr
526758 24gr

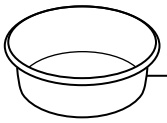

521902
BLIND FILTER



612143 Ø1.1
612142 Ø1.2

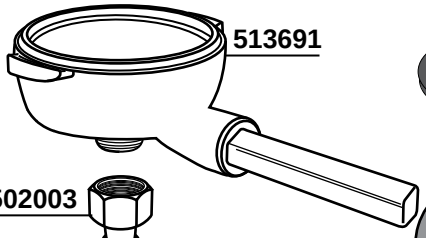

513691

502003

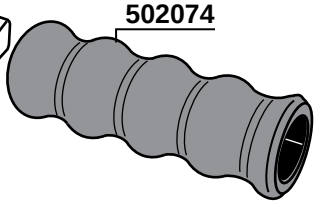

502074



511672
515073
511678

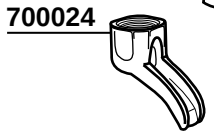

700024

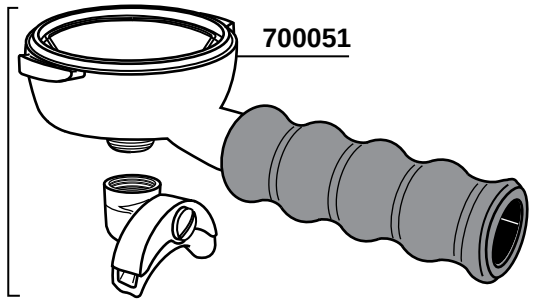

700051
521888

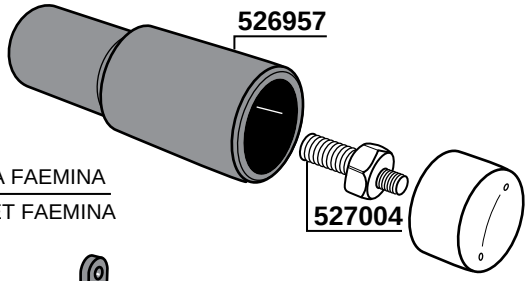

526957
527004

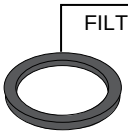

506711 SOTTOCOPPA FAEMINA
FILTERHOLDER GASKET FAEMINA



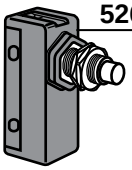

526741

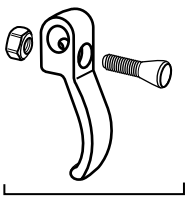

524176

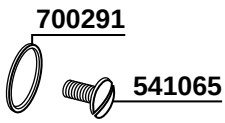

700291
541065

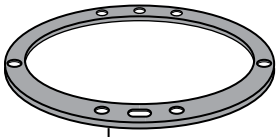

520856
VELOX

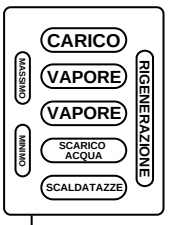

700094
KIT ADESIVI E61

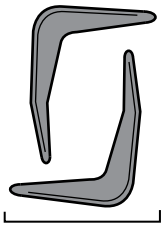

514826/7

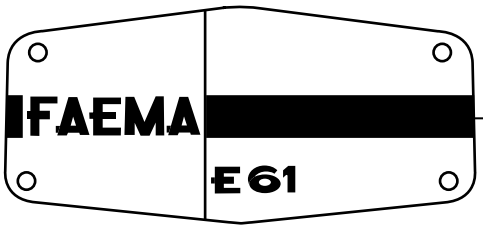

700115 1/GR
700116 2/GR
700117 3/GR



506728 GUARNIZIONE RESISTENZA FAEMINA
FAEMINA GASKET

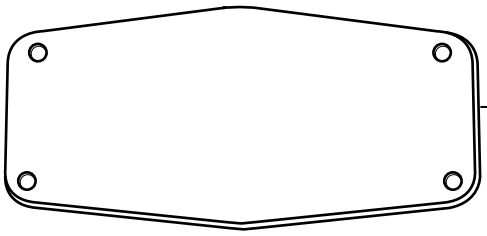

506771 1/GR VETRO/GLASS
506773 2/GR VETRO/GLASS
506774 3/GR VETRO/GLASS

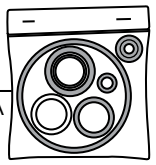

506725
KIT FAEMINA

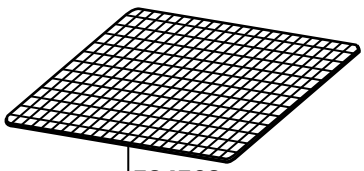

524563
225x210 mm

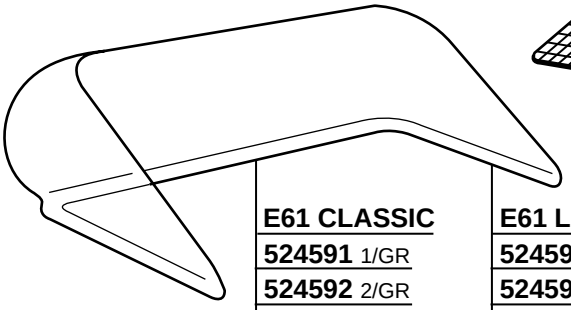

E61 CLASSIC
524591 1/GR
524592 2/GR
524593 3/GR

E61 LEGEND-JUBILE'
524594 1/GR
524595 2/GR
524596 3/GR

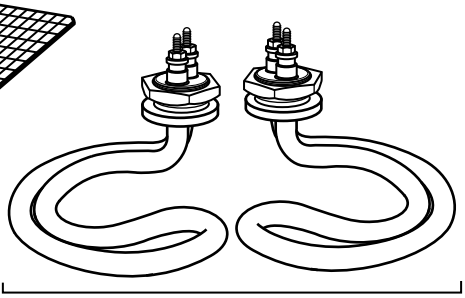

506726 230V - 800+200W
FAEMINA

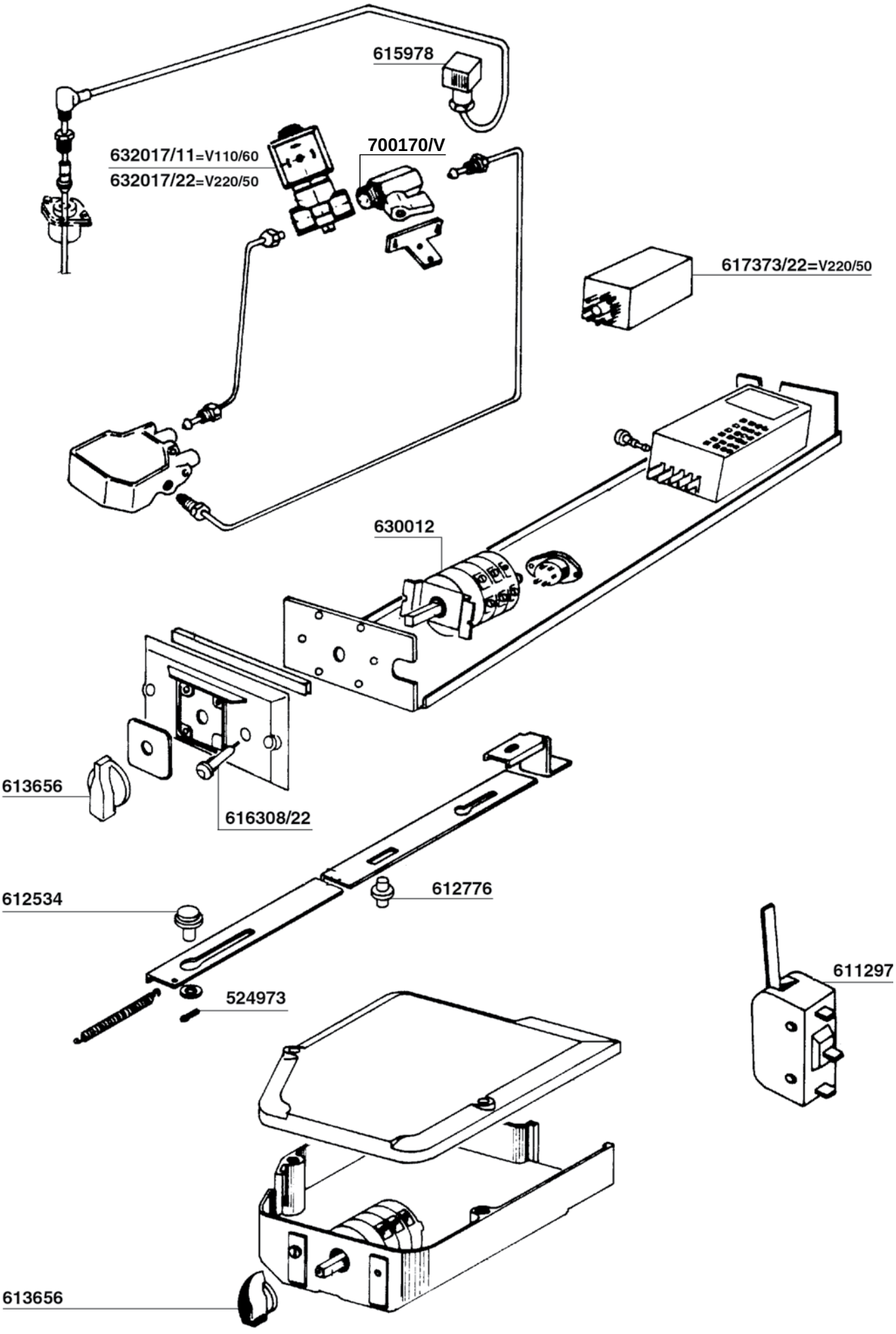
615978
632017/11=V110/60
632017/22=V220/50
700170/V
617373/22=V220/50
630012
613656
616308/22
612534
612776
524973
611297
613656

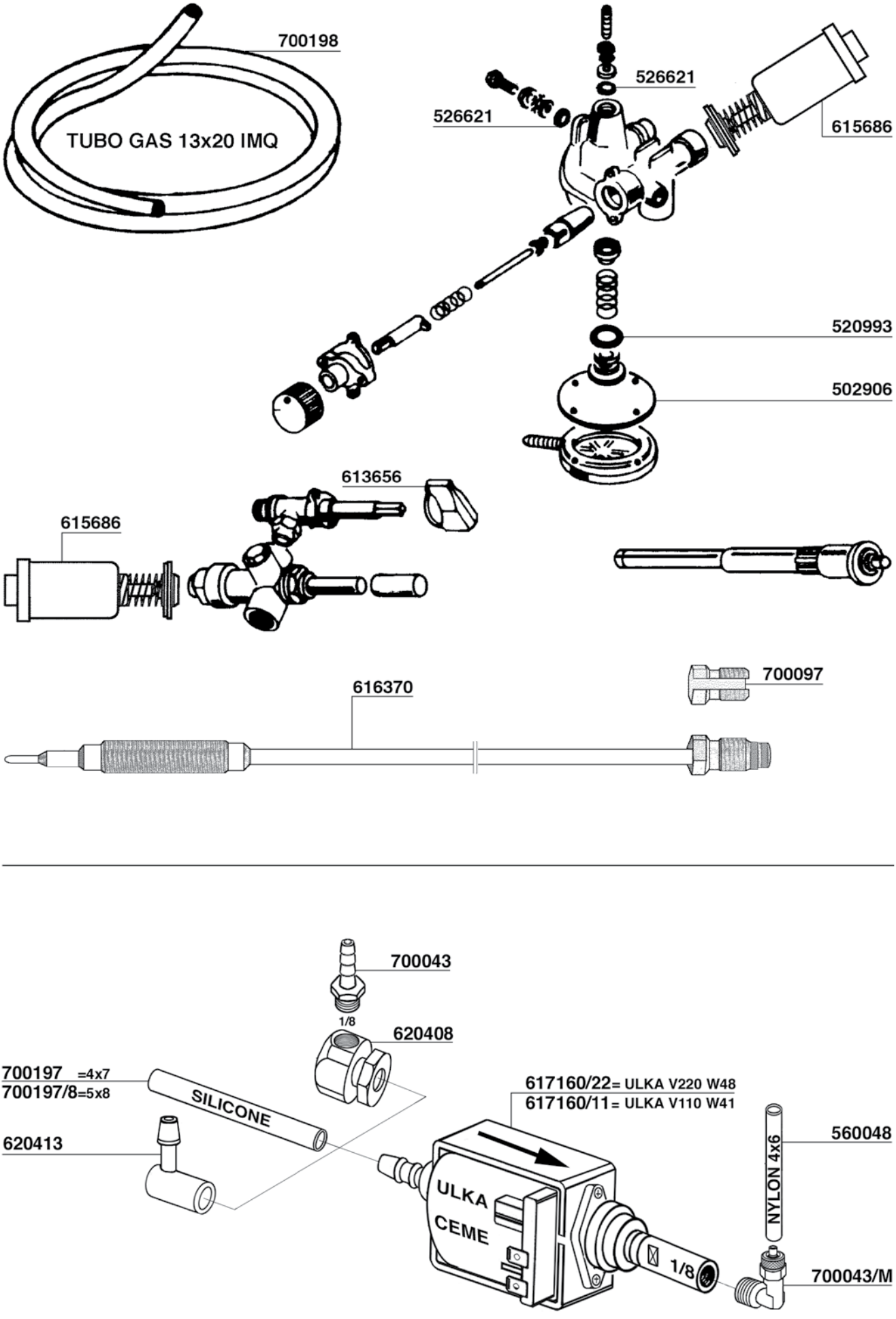
700198
TUBO GAS 13x20 IMQ
526621
526621
615686
520993
502906
613656
615686
700097
616370
700043
1/8
620408
700197 =4x7
700197/8=5x8
SILICONE
620413
617160/22= ULKA V220 W48
617160/11= ULKA V110 W41
ULKA
CEME
1/8
NYLON 4x6
560048
700043/M

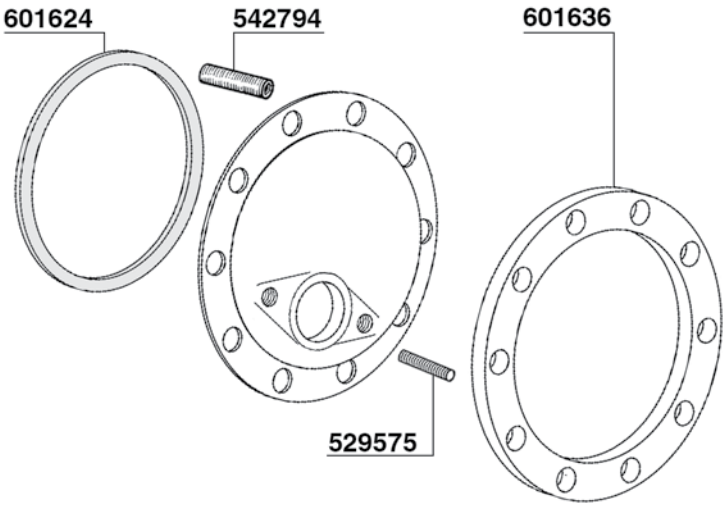

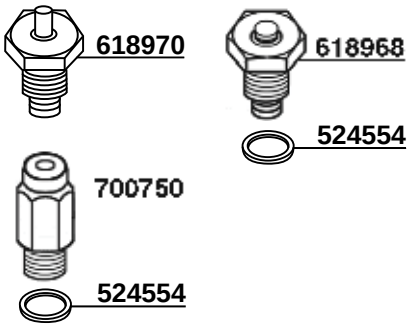

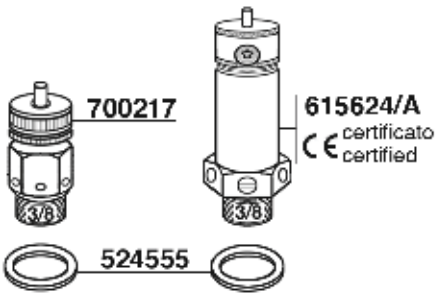

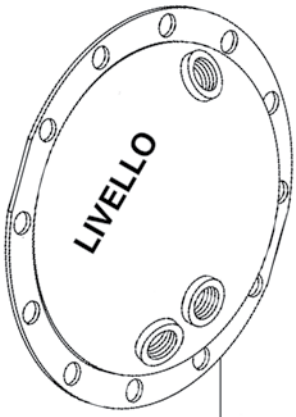

518825=12FORI E61
603302=16FORI ARIETE

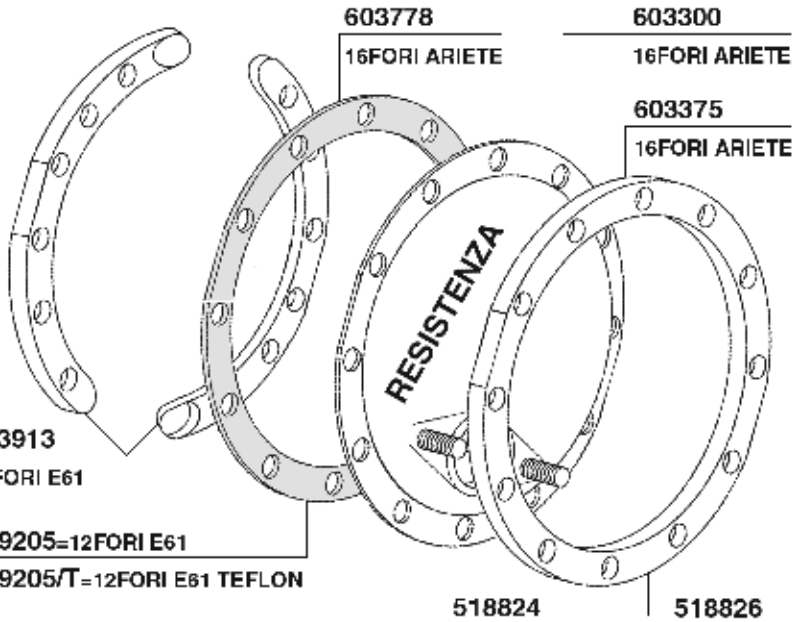

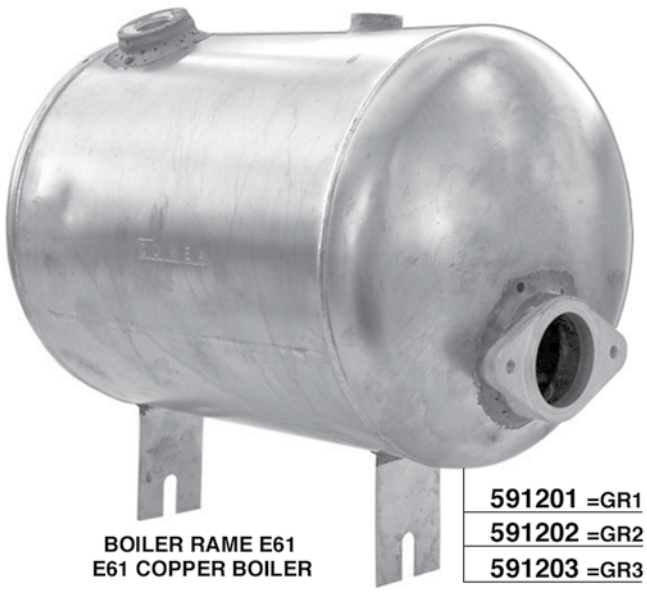

BOILER RAME E61
E61 COPPER BOILER

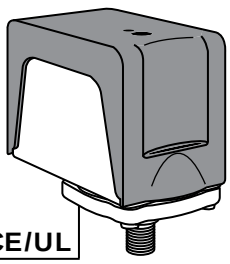

616597 CE/UL

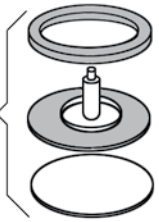

700124
Ø55mm

MANOMETRI

E61 CALDAIA



522990

E61 POMPA

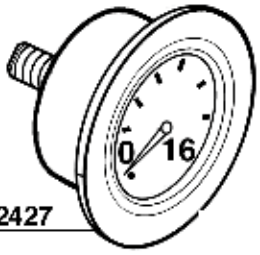

522427

E91 POMPA

632494

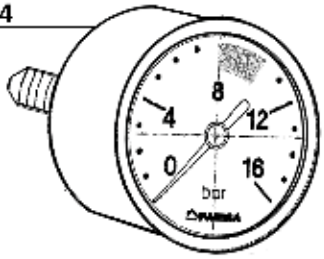

E91 CALDAIA

632493

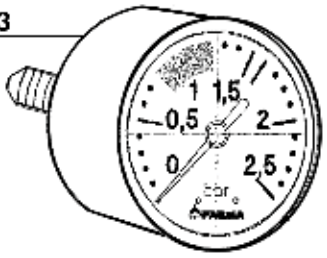

P4-P6 - NO STOP
SPEC.-EXP.-STAR-DUE

701063
NO STOP-P4-P6

701063
NO STOP-P4-P6

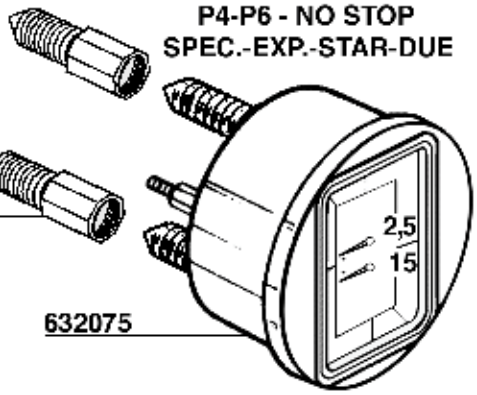

632075

701063
E64-E66

E64 - E66

701063
E64-E66

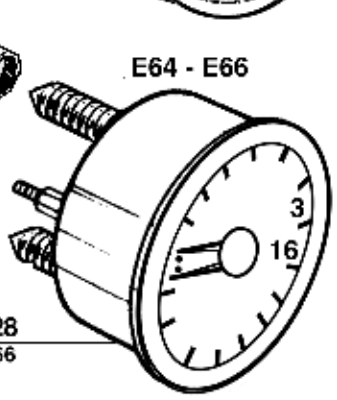

527528
E64-E66

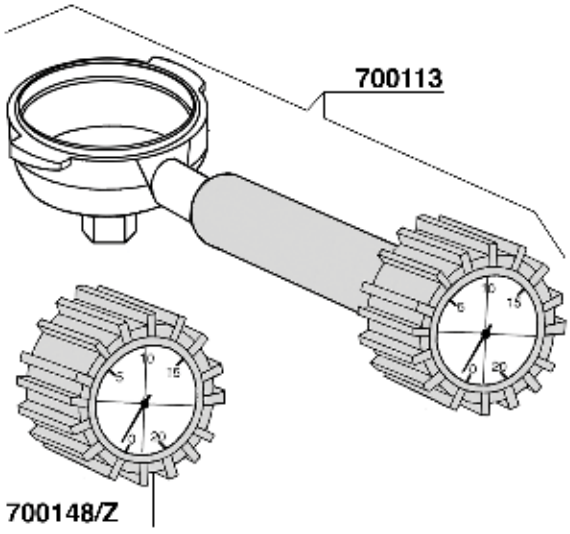

700113

700148/Z

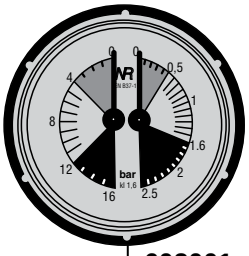

602001 EMBLEMA
DOPPIA SCALA
TWO SCALES

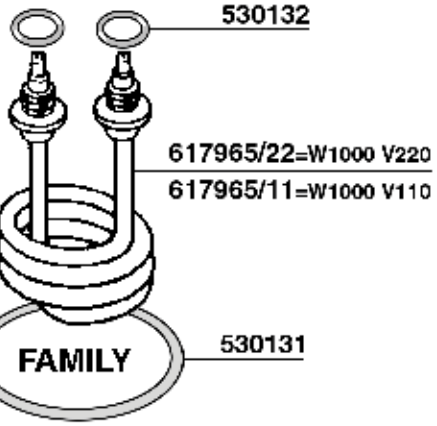

530132

617965/22=W1000 V220
617965/11=W1000 V110

FAMILY

530131

703408=mm.4,5



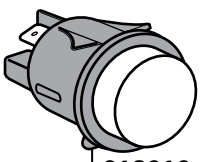

618010 RED
618010/V GREEN



619293



617991

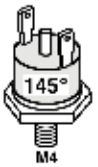

618962
RIARMO MANUALE
MANUAL RESETTING

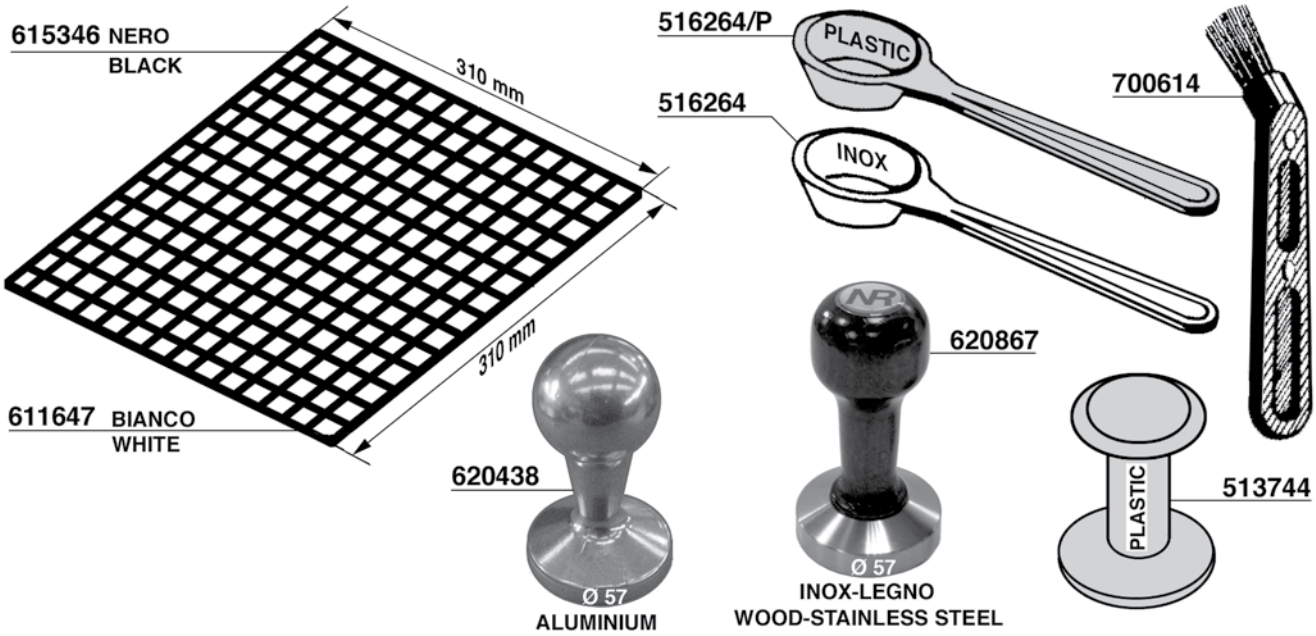

GOMMA NERA-BLACK RUBBER

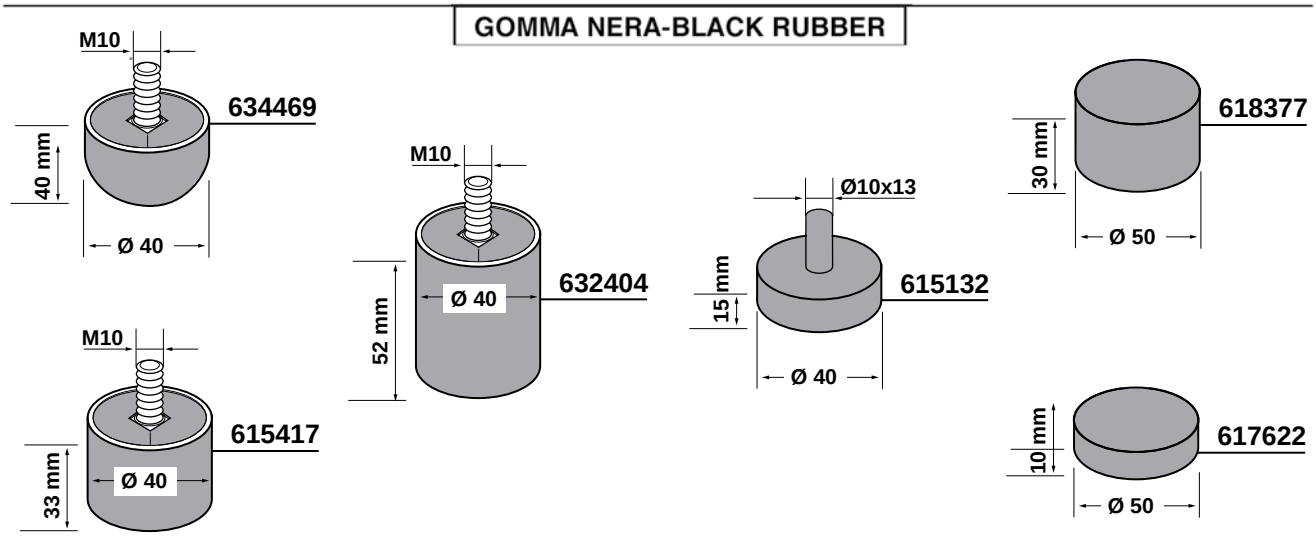

PLASTICA NERA-BLACK PLASTIC

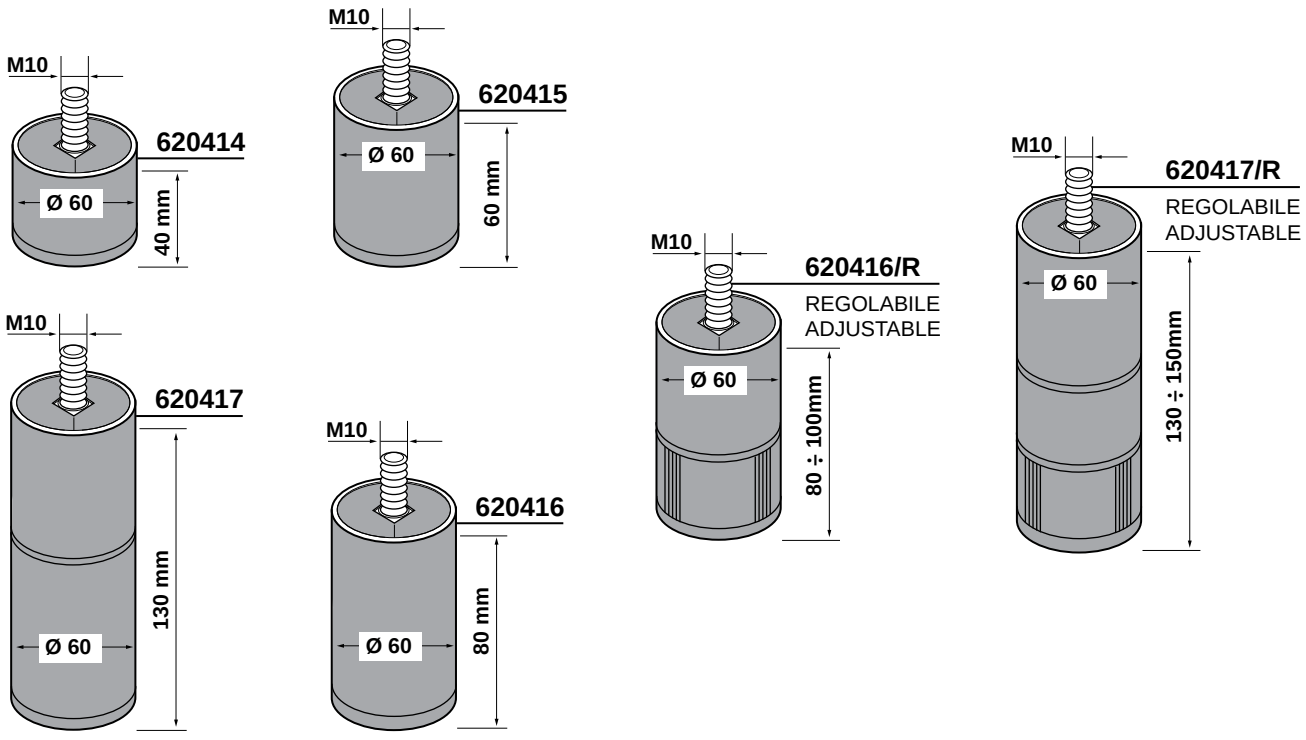

RESISTENZE

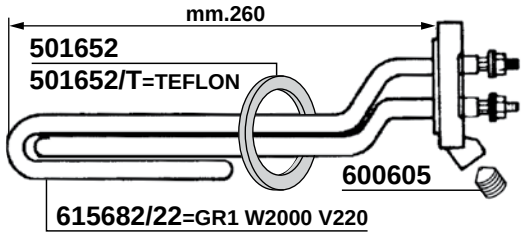

501652
501652/T=TEFLON
600605
615682/22=GR1 W2000 V220

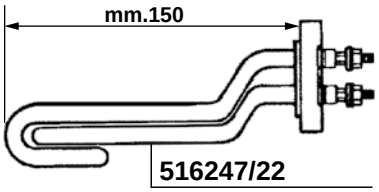

516247/22
GR1 5LT W1500 V220

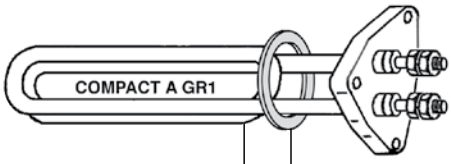

618963/22=1500W 220 V
618963/11=1300W 110 V
400826/T

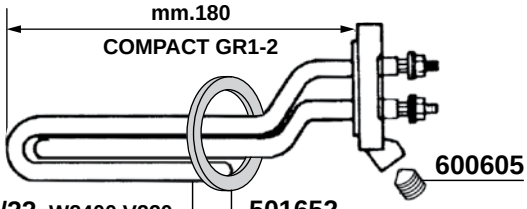

600605
616635/22=W2400 V220
616635/11=W2400 V110
501652
501652/T=TEFLON

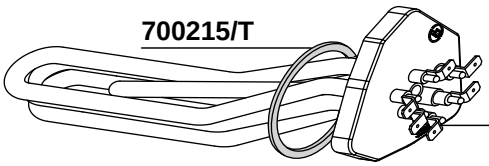

700215/T
570013 = 1GR 2700W 230/400V mm.190

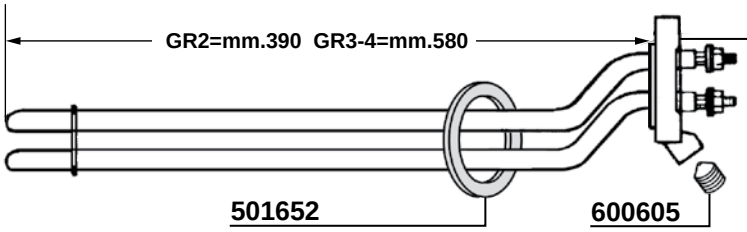

530700/22=GR2 W2600 V220
616065/22=GR2 W3700 V220
530700/11=GR2 W2600 V110
530701/22=GR3 W3700 V220
616066/22=GR3-4 W5000 V220
501652
501652/T=TEFLON
600605

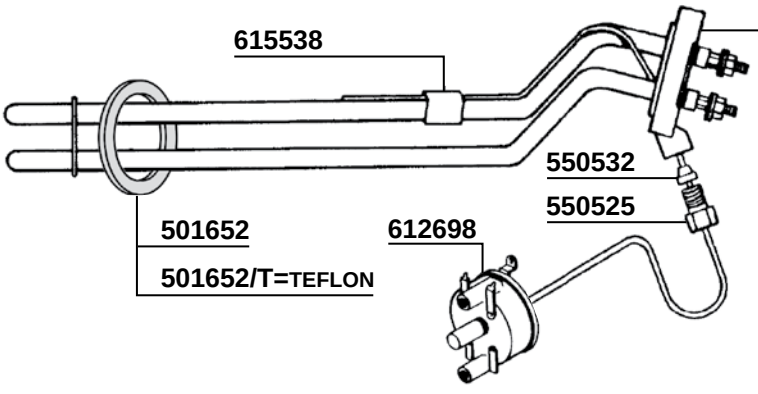

615538
617129/22
COMPACT GR2-1 W2400 V220
550532
550525
501652
501652/T=TEFLON
612698

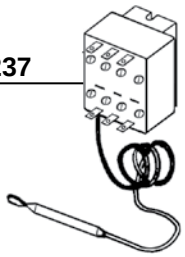

703237

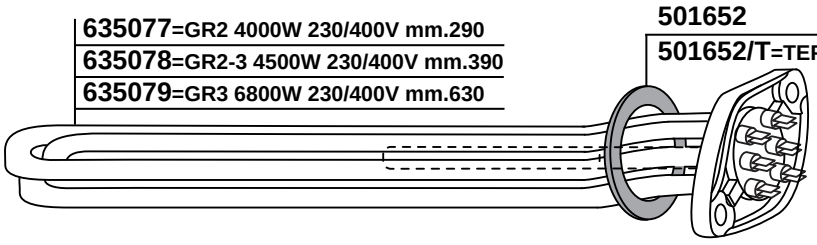

635077=GR2 4000W 230/400V mm.290
635078=GR2-3 4500W 230/400V mm.390
635079=GR3 6800W 230/400V mm.630
501652
501652/T=TEFLON

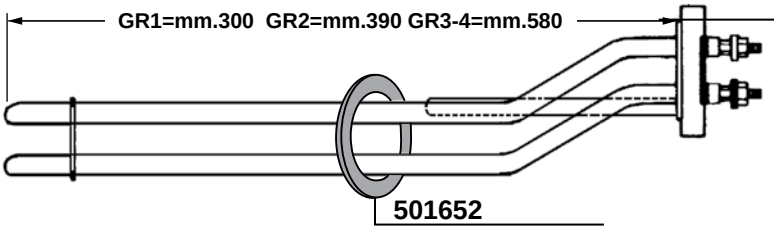

633002/22=GR1 W2500 V220
630090/22=GR2 W3500 V220
633004/22=GR3 W3700 V220
633091/22=GR3-4 W5000 V220
633092=GR3-4 W6500 V220
501652
501652/T=TEFLON

ELETTROPOMPE

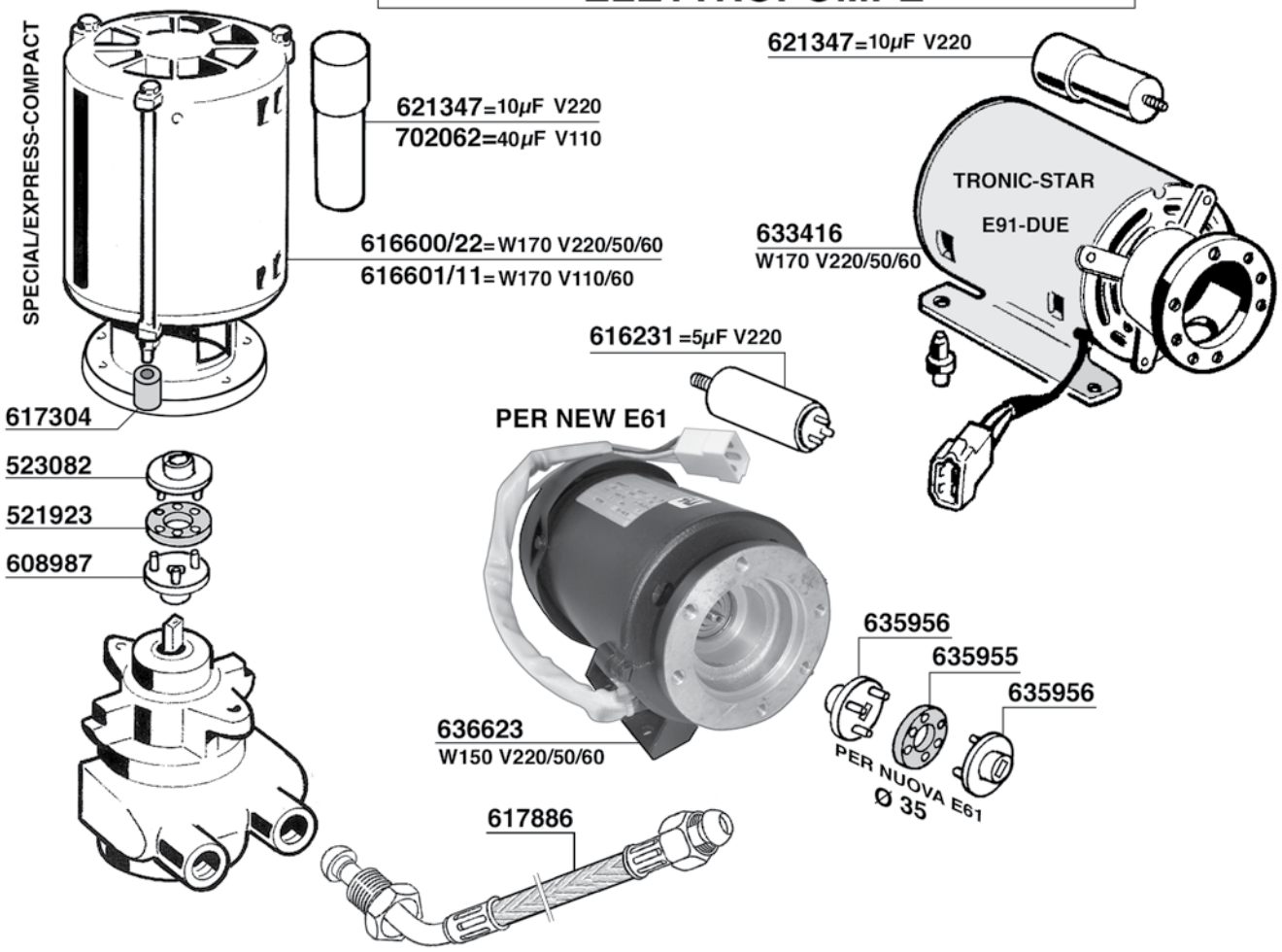

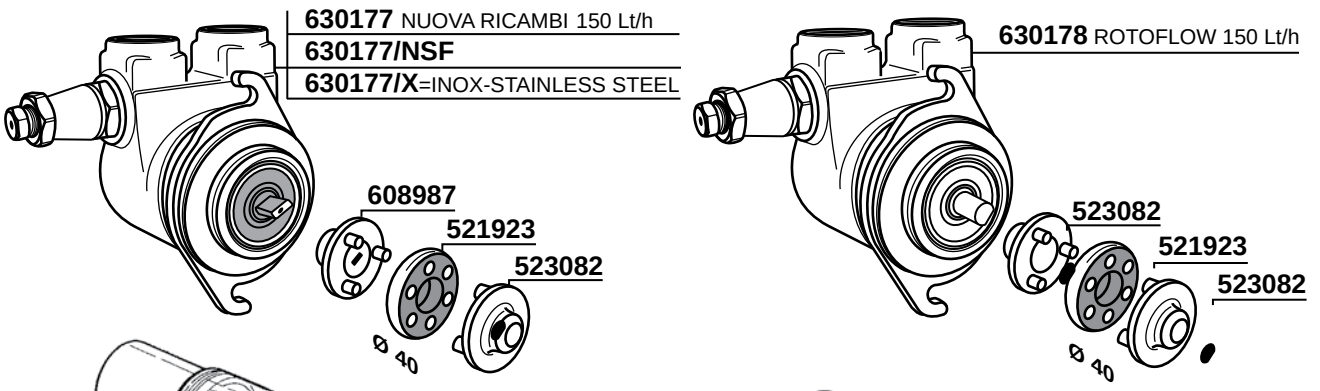

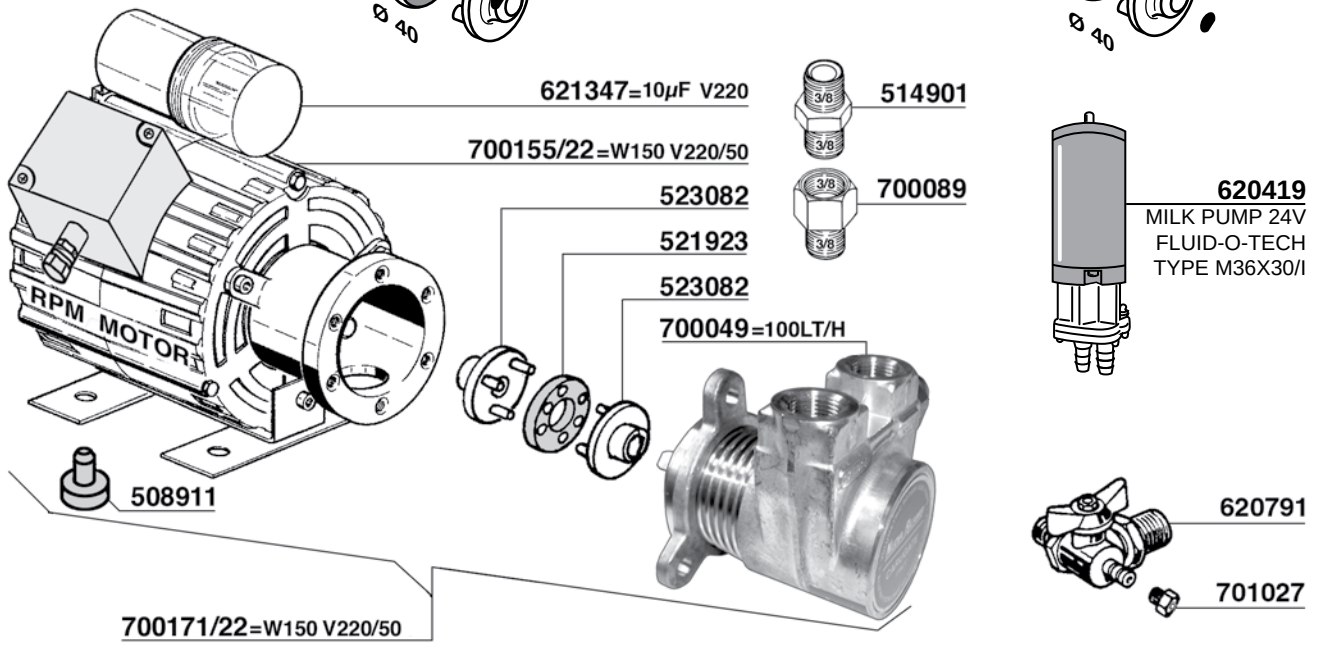

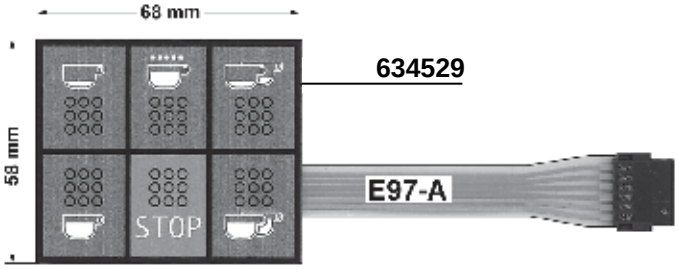

634529



632842

GRIGIO - GREY

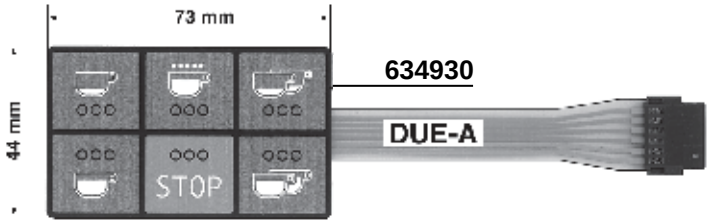

634930

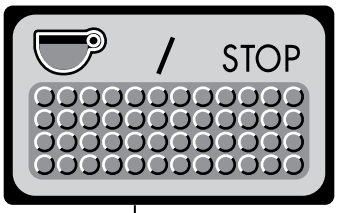

619002

DUE/SMART - S



634927



591540

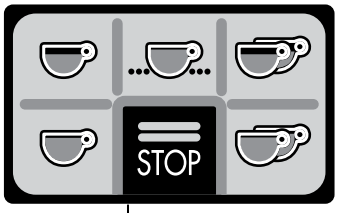

619003

DUE/SMART - A

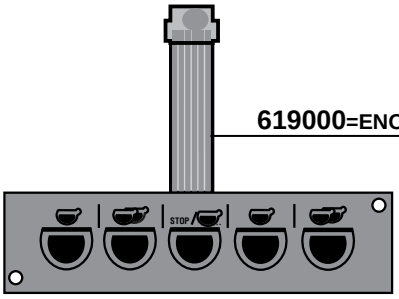

619000=ENOVA/A

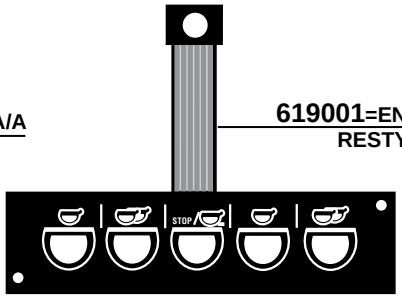

619001=ENOVA
RESTYLING

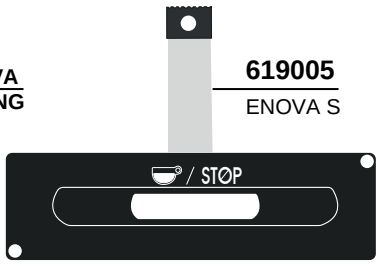

619005

ENOVA S

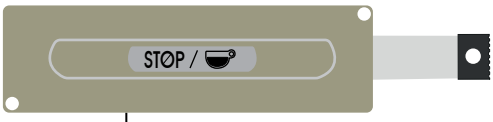

619006

E98 RE

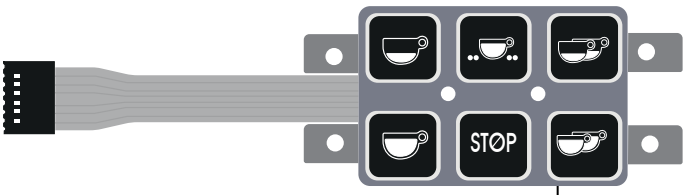

619007

SMART - R/A

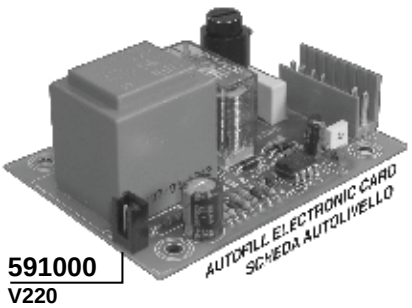

591000

V220

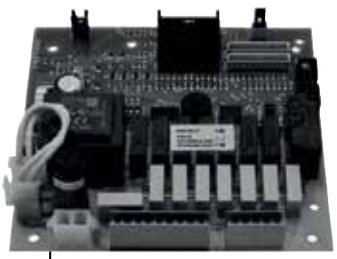

SCHEDA ELETTRONICA UNIFICATA
UNIFIED ELECTRONIC CARD

591549

DUE-DUE SMART-E61 JUBILE'
E91-E92 COMPACT-E97
STYLEMA - E98 PRESIDENT/A

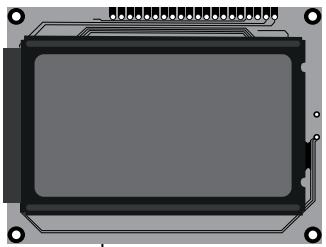

700608

M39 - M39GT

FC 31 MINERVA-TOSTAPANE EGI

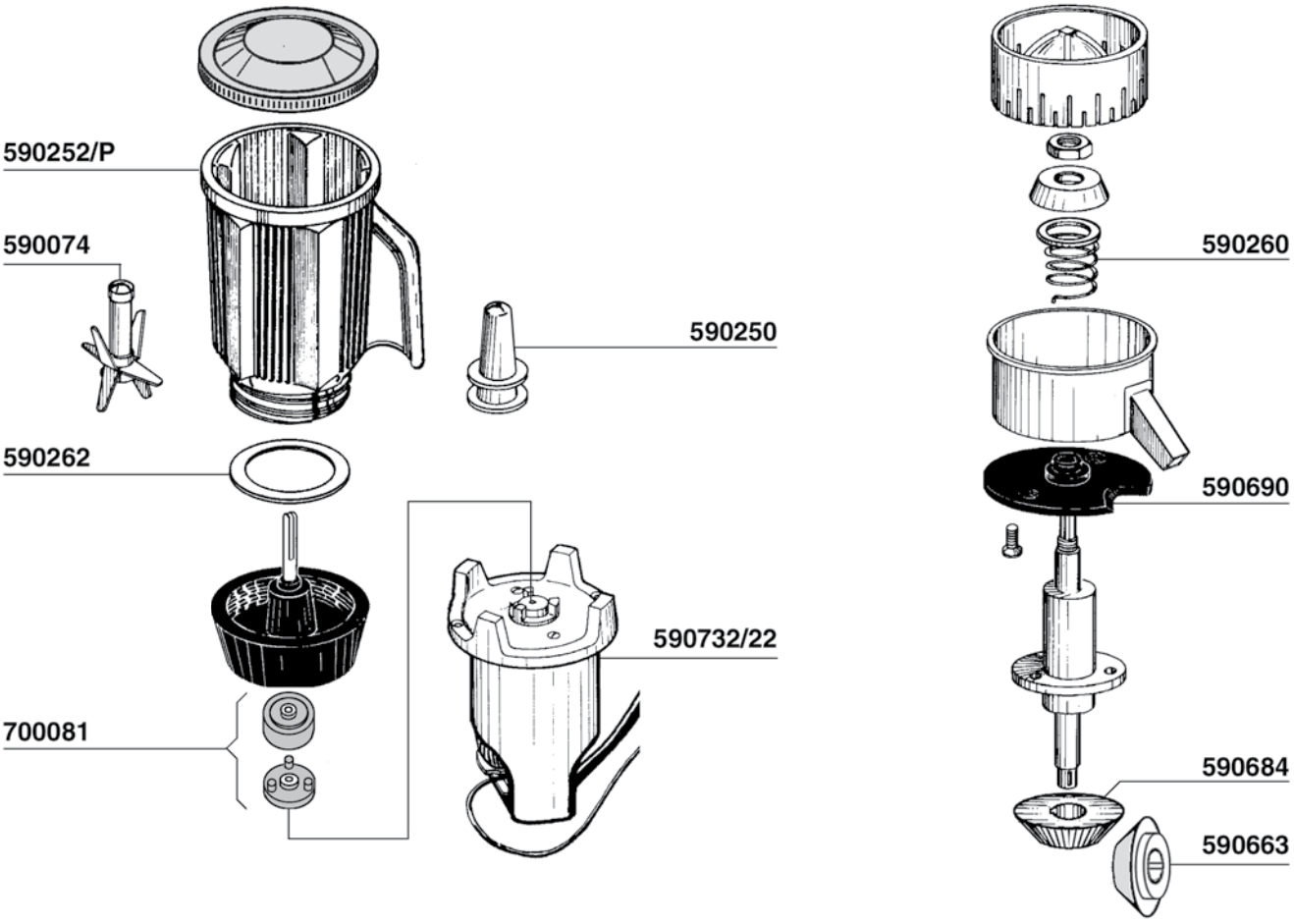

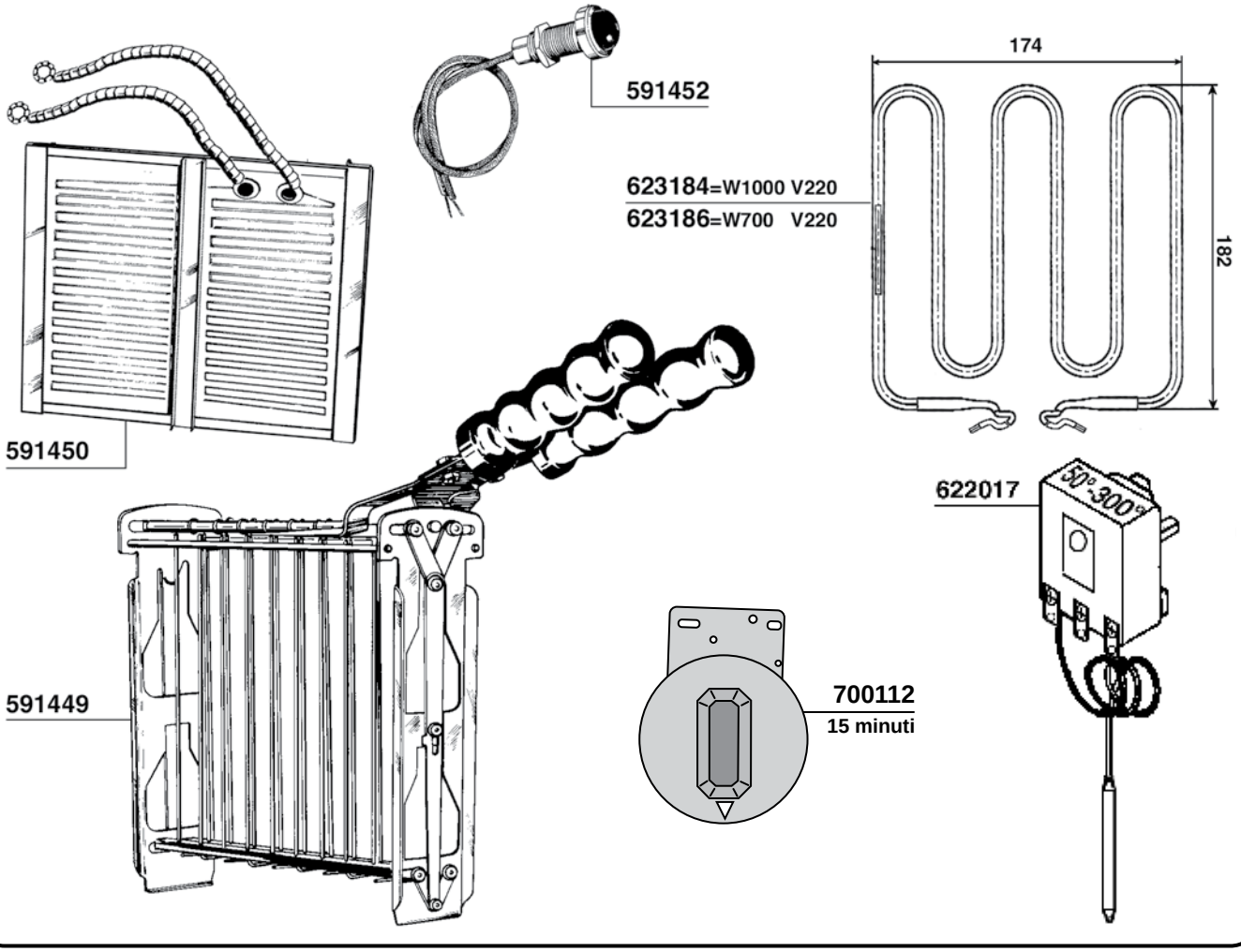

FIAMMA RST

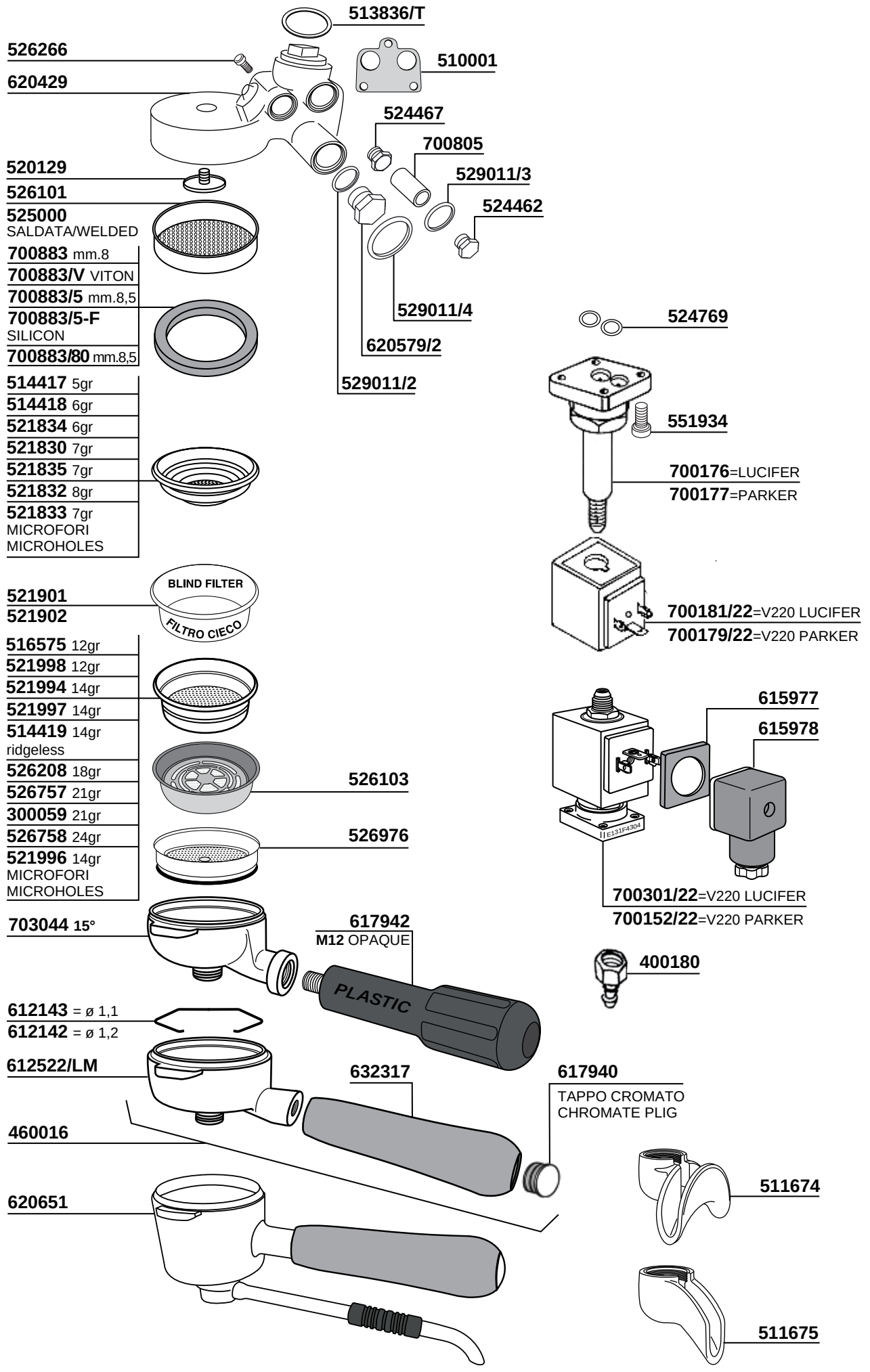
513836/T
526266
620429
510001
524467
700805
529011/3
524462
520129
526101
525000
SALDATA/WELDED
700883 mm.8
700883/V VITON
700883/5 mm.8,5
700883/5-F
SILICON
700883/80 mm.8,5
529011/4
620579/2
529011/2
524769
551934
700176=LUCIFER
700177=PARKER
514417 5gr
514418 6gr
521834 6gr
521830 7gr
521835 7gr
521832 8gr
521833 7gr
MICROFORI
MICROHOLES
700181/22=V220 LUCIFER
700179/22=V220 PARKER
521901
521902
BLIND FILTER
FILTRO CIECO
516575 12gr
521998 12gr
521994 14gr
521997 14gr
514419 14gr
ridgeless
526208 18gr
526757 21gr
300059 21gr
526758 24gr
521996 14gr
MICROFORI
MICROHOLES
615977
615978
526103
526976
E131F4304
700301/22=V220 LUCIFER
700152/22=V220 PARKER
703044 15°
617942
M12 OPAQUE
PLASTIC
400180
612143 = ø 1,1
612142 = ø 1,2
612522/LM
632317
617940
TAPPO CROMATO
CHROMATE PLIG
460016
620651
511674
511675

FIAMMA RST

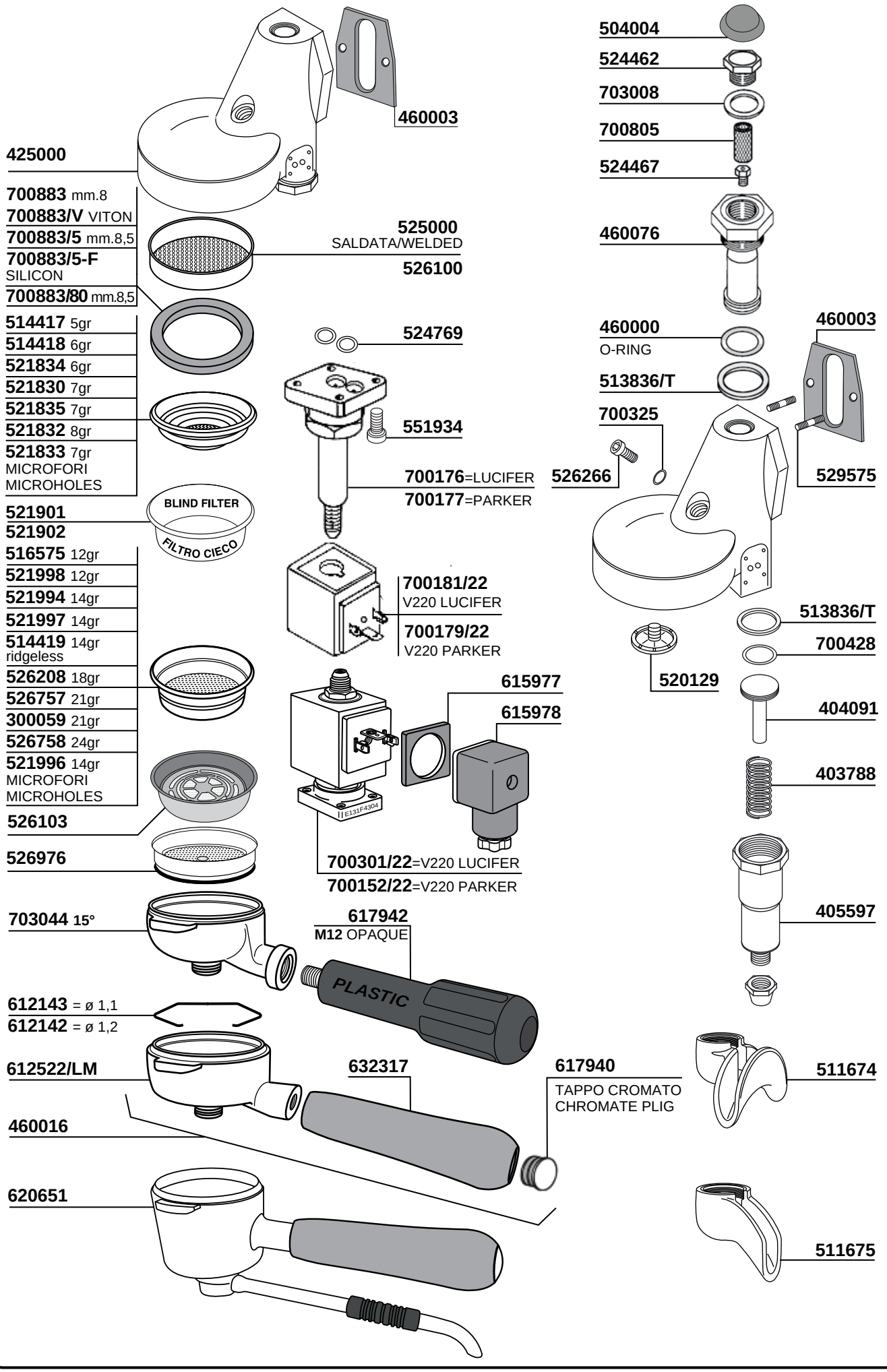
460003
425000
700883 mm.8
700883/V VITON
700883/5 mm.8,5
700883/5-F SILICON
700883/80 mm.8,5
514417 5gr
514418 6gr
521834 6gr
521830 7gr
521835 7gr
521832 8gr
521833 7gr MICROFORI MICROHOLES
521901
521902
516575 12gr
521998 12gr
521994 14gr
521997 14gr
514419 14gr ridgeless
526208 18gr
526757 21gr
300059 21gr
526758 24gr
521996 14gr MICROFORI MICROHOLES
526103
526976
703044 15°
612143 = ø 1,1
612142 = ø 1,2
612522/LM
460016
620651
BLIND FILTER
FILTRO CIECO
525000 SALDATA/WELDED
526100
524769
551934
700176=LUCIFER
700177=PARKER
700181/22 V220 LUCIFER
700179/22 V220 PARKER
615977
615978
E131F4304
700301/22=V220 LUCIFER
700152/22=V220 PARKER
617942 M12 OPAQUE
PLASTIC
632317
617940 TAPPO CROMATO CHROMATE PLIG
504004
524462
703008
700805
524467
460076
460000 O-RING
513836/T
700325
526266
460003
529575
513836/T
700428
520129
404091
403788
405597
511674
511675

FIAMMA RST

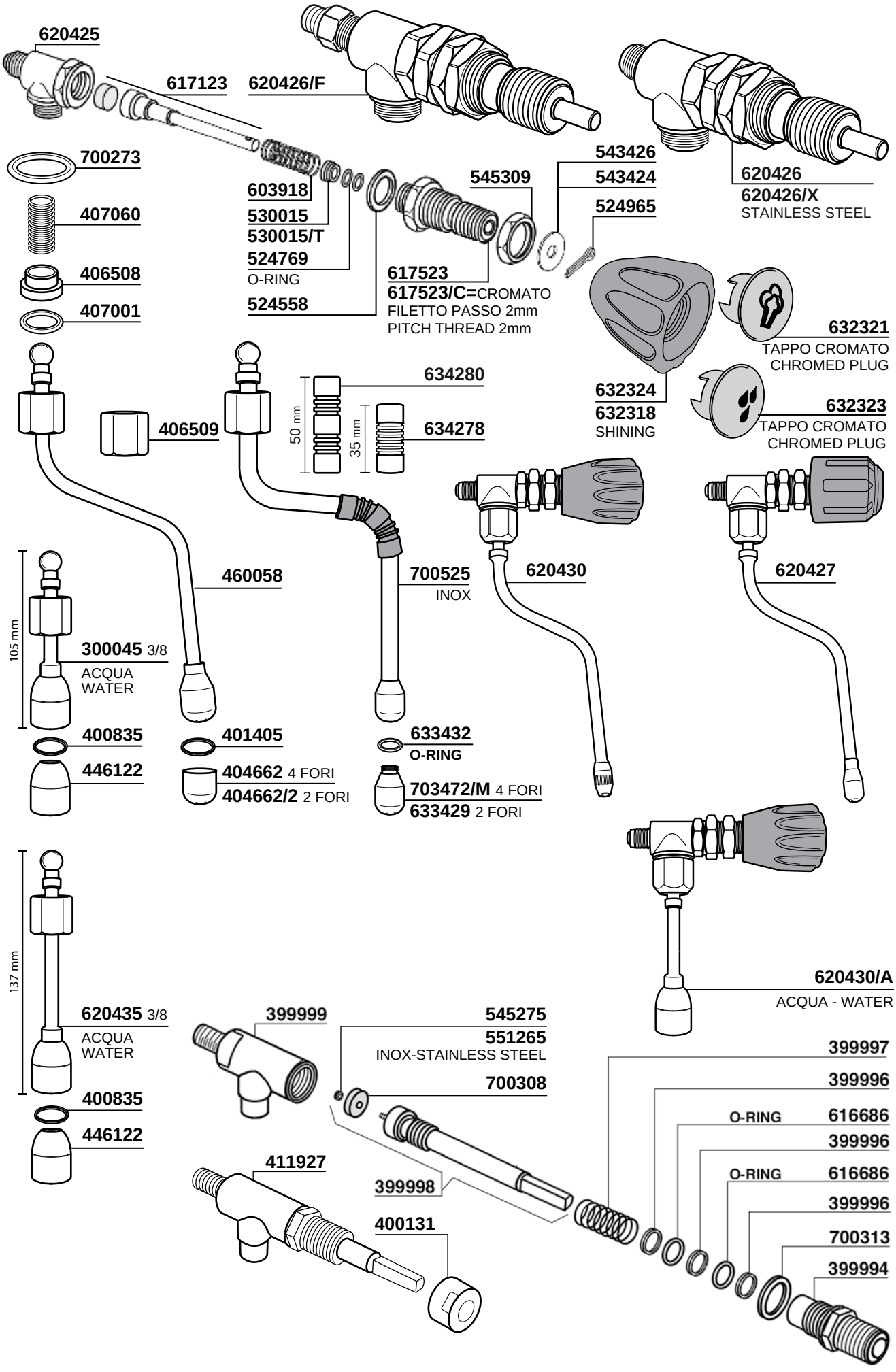
620425
617123
620426/F
620426
620426/X
STAINLESS STEEL
700273
407060
406508
407001
603918
530015
530015/T
524769
O-RING
524558
545309
543426
543424
524965
617523
617523/C= CROMATO
FILETTO PASSO 2mm
PITCH THREAD 2mm
632321
TAPPO CROMATO
CHROMED PLUG
632324
632318
SHINING
632323
TAPPO CROMATO
CHROMED PLUG
634280
634278
50 mm
35 mm
406509
460058
700525
INOX
620430
620427
105 mm
300045 3/8
ACQUA
WATER
400835
446122
401405
404662 4 FORI
404662/2 2 FORI
633432
O-RING
703472/M 4 FORI
633429 2 FORI
620430/A
ACQUA - WATER
137 mm
620435 3/8
ACQUA
WATER
400835
446122
399999
545275
551265
INOX-STAINLESS STEEL
700308
399997
399996
O-RING
616686
399996
O-RING
616686
399996
700313
399994
411927
399998
400131

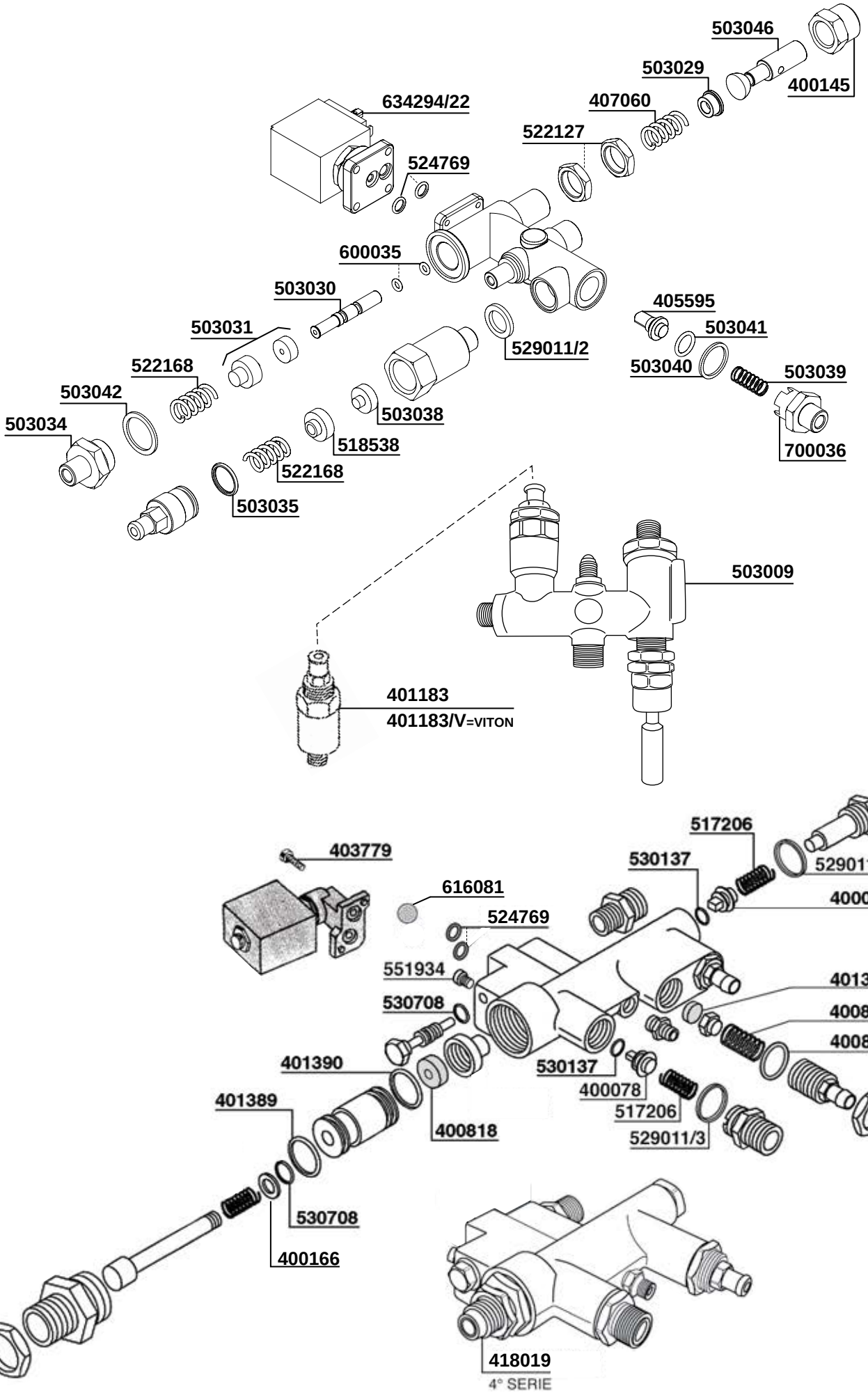
503046
503029
400145
634294/22
407060
522127
524769
600035
503030
405595
503041
503031
529011/2
503040
503039
522168
503042
503038
700036
503034
518538
522168
503035
503009
401183
401183/V=VITON
517206
403779
530137
529011/3
616081
400078
524769
551934
401365
530708
400884
400836
401390
530137
400078
517206
529011/3
401389
400818
530708
400166
418019
4° SERIE

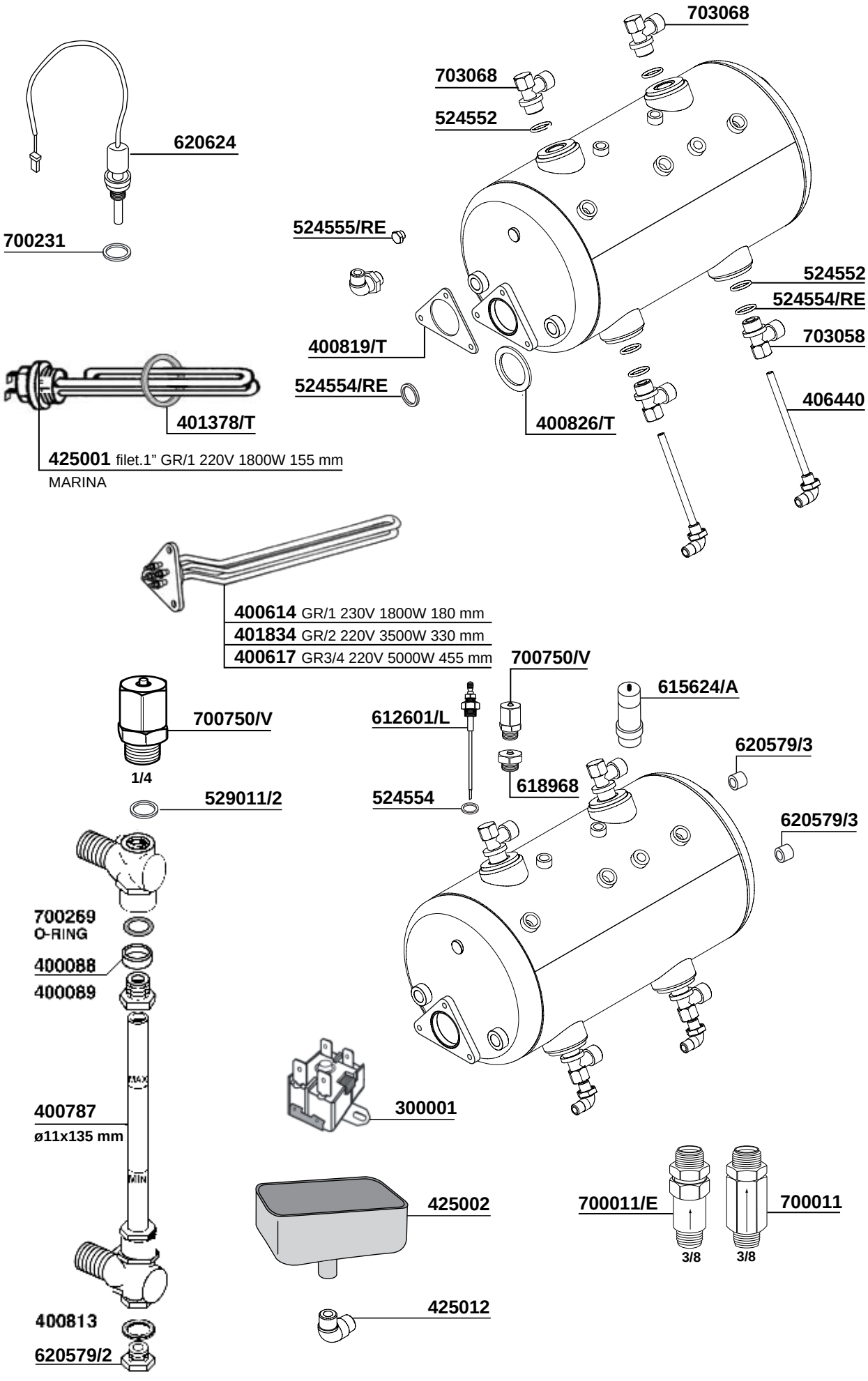
703068
703068
524552
620624
524555/RE
700231
524552
524554/RE
703058
400819/T
524554/RE
406440
401378/T
400826/T
425001 filet.1" GR/1 220V 1800W 155 mm
MARINA
400614 GR/1 230V 1800W 180 mm
401834 GR/2 220V 3500W 330 mm
400617 GR3/4 220V 5000W 455 mm
700750/V
615624/A
700750/V
612601/L
620579/3
1/4
618968
529011/2
524554
620579/3
700269
O-RING
400088
400089
400787
ø11x135 mm
300001
425002
700011/E
700011
3/8
3/8
425012
400813
620579/2

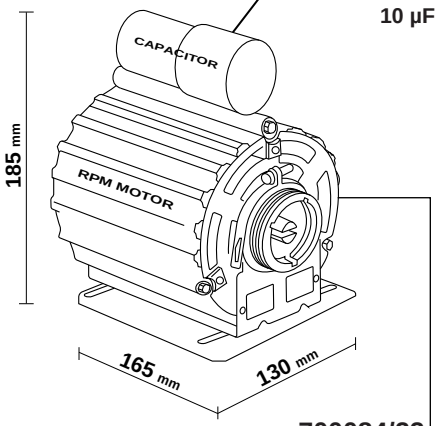

621347
CAPACITOR
CONDENSAT.
10 µF

700084/22
V220/50/60 W165 HP0,2 WITH CABLE

700086/22=V220/50/60 W150 HP0,2
700086/11=V110/60 W120 HP0,1

621112=6,3µF 220V
621113=25µF 110V

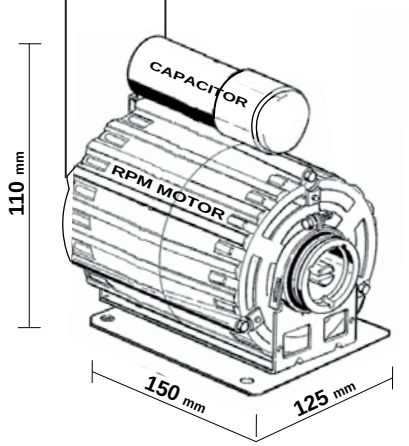

MOTORE PICCOLO - SMALL MOTOR

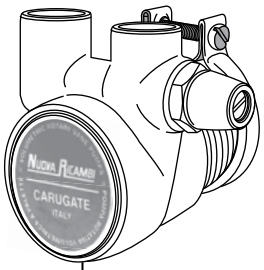

700055
100 Lt/h

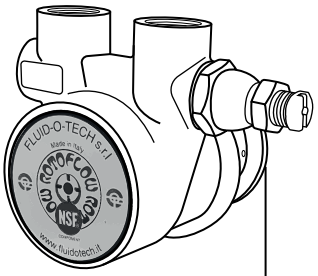

620406 150 Lt/h
620406/X 150 Lt/h INOX-STAINLESS STEEL



700050

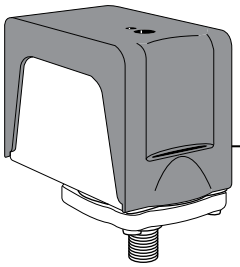

616597

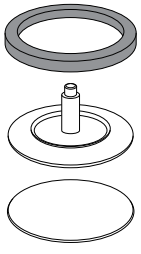

700124

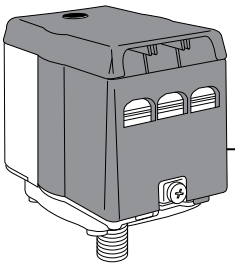

616592

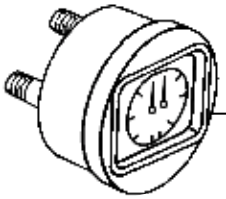

400737
BAR-CENTURY

BOILER

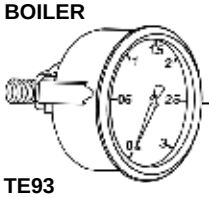

700594/T
Ø40mm.
TE93

POMPA

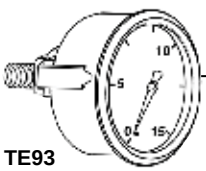

700595/T
Ø40mm.
TE93

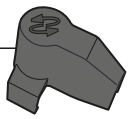

617902

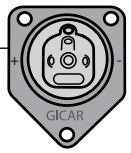

620405/C

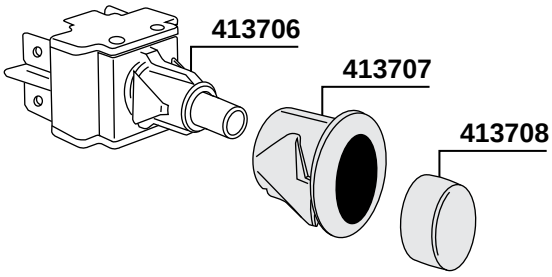

413706

413707

413708



615978/T



615979

617903/G



530148





551937

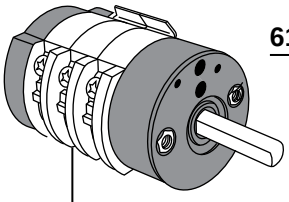

417213

20A 0-1-2

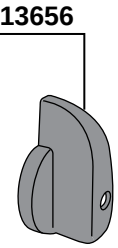

613656

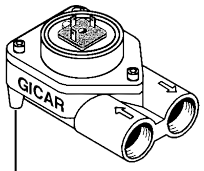

620405 1/4" UL-NSF METAL

620404 1/8" UL-NSF METAL

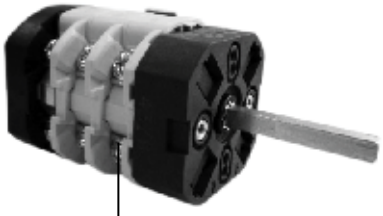

404992=20A

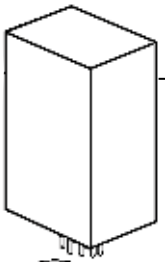

401871 F8 220V



607267 = F8

ARANCIO
ORANGE

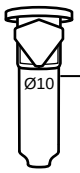

402627

COVER

VERDE
GREEN

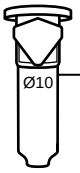

402628

COVER

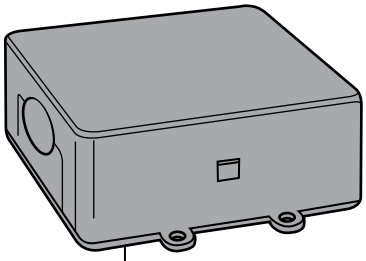

425003

GICAR CODE 9.5.32.37 G00

425004

GICAR CODE 9.5.33.13 E

VERDE
GREEN

ROSSO
RED

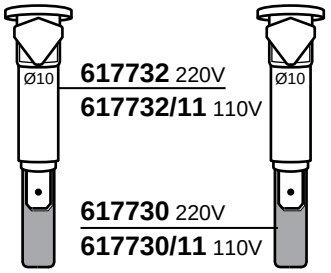

617732 220V

617732/11 110V

617730 220V

617730/11 110V

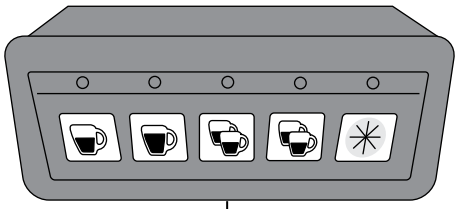

301000

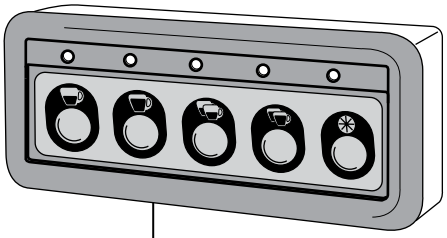

620736 16 PIN

GICAR CODE 9.9.08.83G

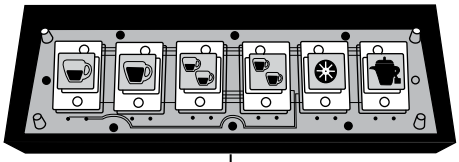

425007

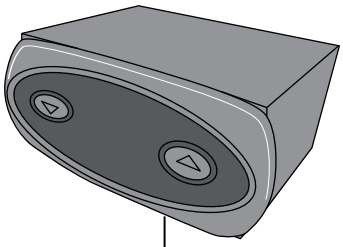

425006

9.3.00.50.G11

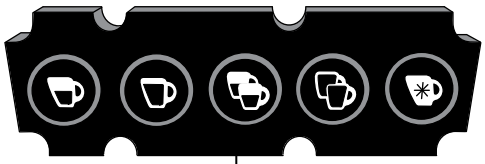

425005

GICAR CODE 9.9.14.95.G



425008

9.9.14.04.G

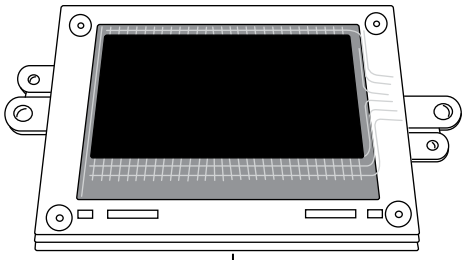

425009

8.8.74.04.G

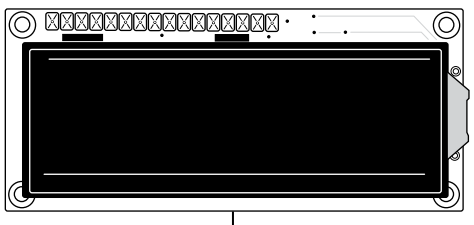

425010

9.5.13.70.G

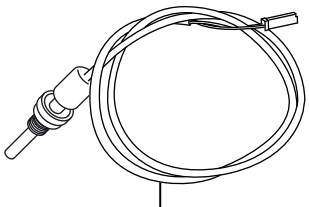

425011

178

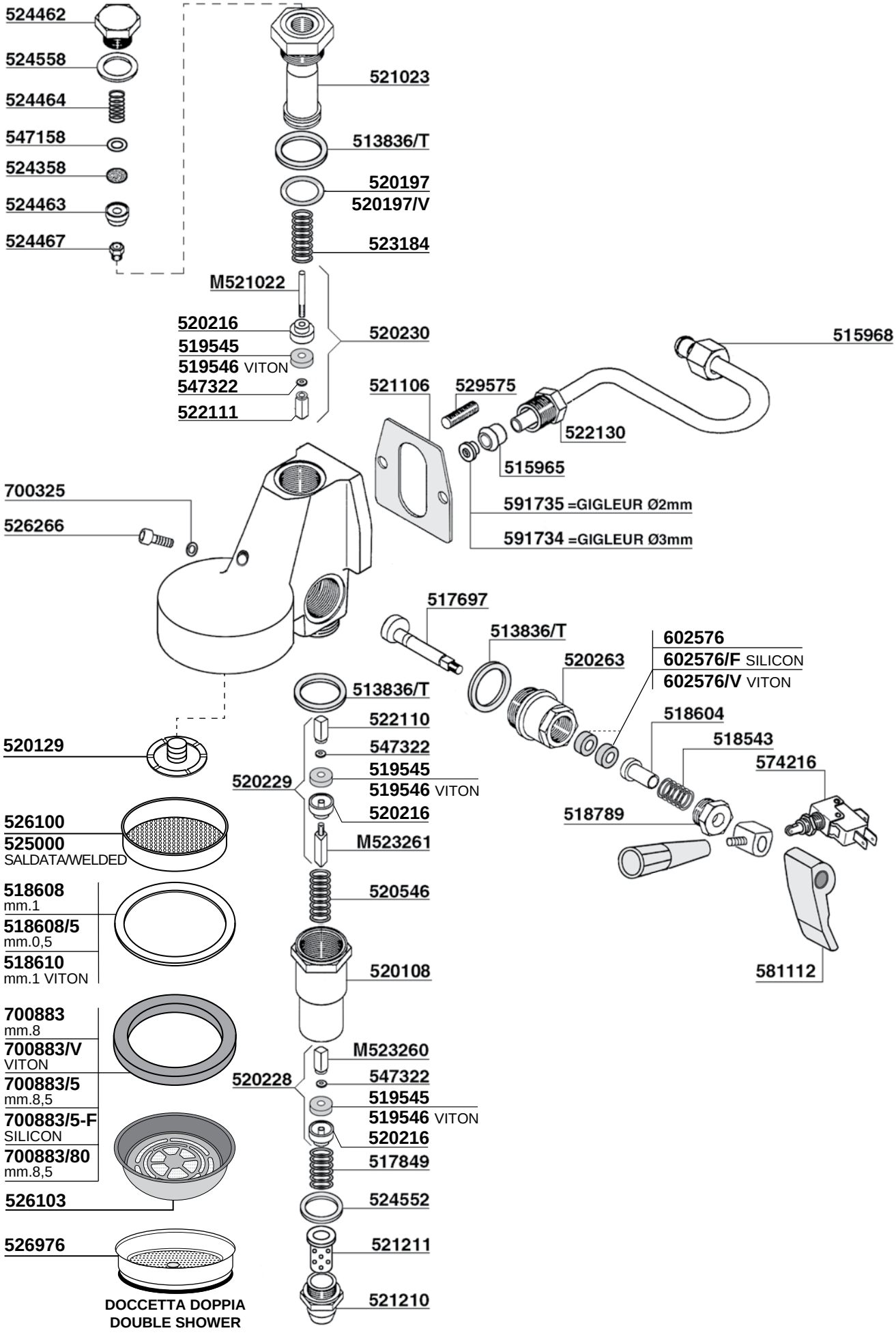
524462
524558
524464
547158
524358
524463
524467
521023
513836/T
520197
520197/V
523184
M521022
520216
519545
519546 VITON
547322
522111
520230
515968
521106
529575
522130
515965
591735 =GIGLEUR Ø2mm
591734 =GIGLEUR Ø3mm
700325
526266
517697
513836/T
520263
602576
602576/F SILICON
602576/V VITON
513836/T
522110
547322
519545
519546 VITON
520216
520229
518604
518543
574216
518789
520129
526100
525000
SALDATA/WELDED
M523261
520546
518608
mm.1
518608/5
mm.0,5
518610
mm.1 VITON
520108
581112
700883
mm.8
700883/V
VITON
700883/5
mm.8,5
700883/5-F
SILICON
700883/80
mm.8,5
M523260
520228
547322
519545
519546 VITON
520216
517849
526103
524552
526976
521211
521210
DOCCETTA DOPPIA
DOUBLE SHOWER

NEW
575572
524555
617121
581113 KIT PULSER NT0029

575572
582988
617121
581115 KIT ARIANNE NT0030
515839

700332
582995
515839

RIMINI-ARIANNE
612985/E

515839
ARIETE

524761
526100
525000 SALDATA/WELDED
700883 mm.8
700883/V VITON
700883/5 mm.8,5
700883/5-F SILICON
700883/80 mm.8,5

524767
700177=PARKER
551934
700189/22 V220/50/60
700189/11 V110/60

524767
700177 PARKER
551934
700189/22 V220/50/60
700189/11 V110/60

526103
526976
DOCCETTA DOPPIA
DOUBLE SHOWER

CENTRALINA AUTOLIVELLO
AUTOFIL ELECTRONIC BOX
508280 RIMINI

576288/22 V220/50/60
576288/11 V110/60

577403

579671 NERO/BLACK

583319
582722

CENTRALINA AUTOLIVELLO
AUTOFIL ELECTRONIC BOX
582613 =V220

583307

180

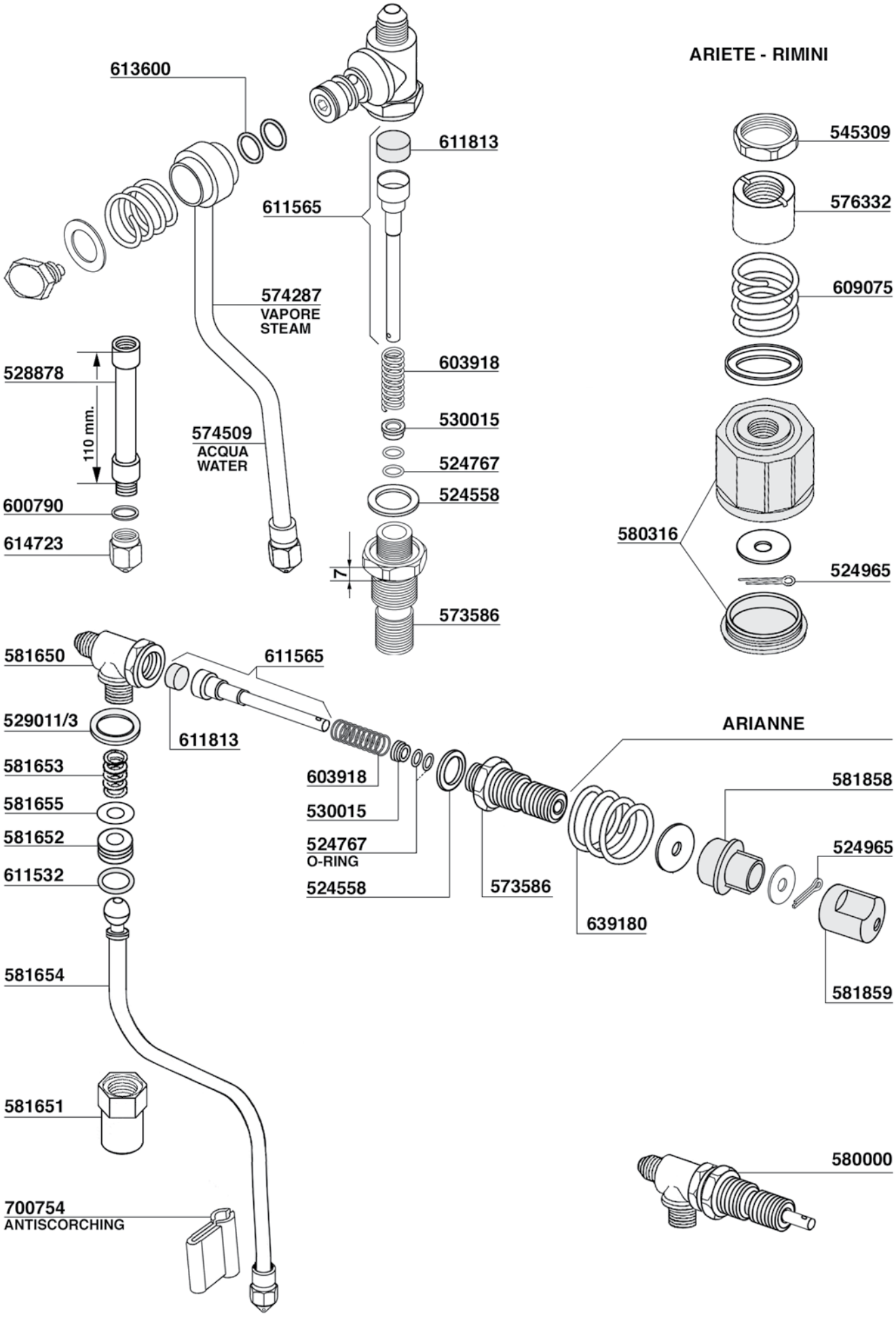
613600
611813
611565
574287
VAPORE
STEAM
603918
530015
524767
524558
528878
110 mm.
574509
ACQUA
WATER
600790
614723
7
573586
ARIETE - RIMINI
545309
576332
609075
580316
524965
581650
611565
529011/3
611813
581653
581655
581652
611532
581654
581651
700754
ANTISCORCHING
ARIANNE
603918
530015
524767
O-RING
524558
573586
639180
581858
524965
581859
580000

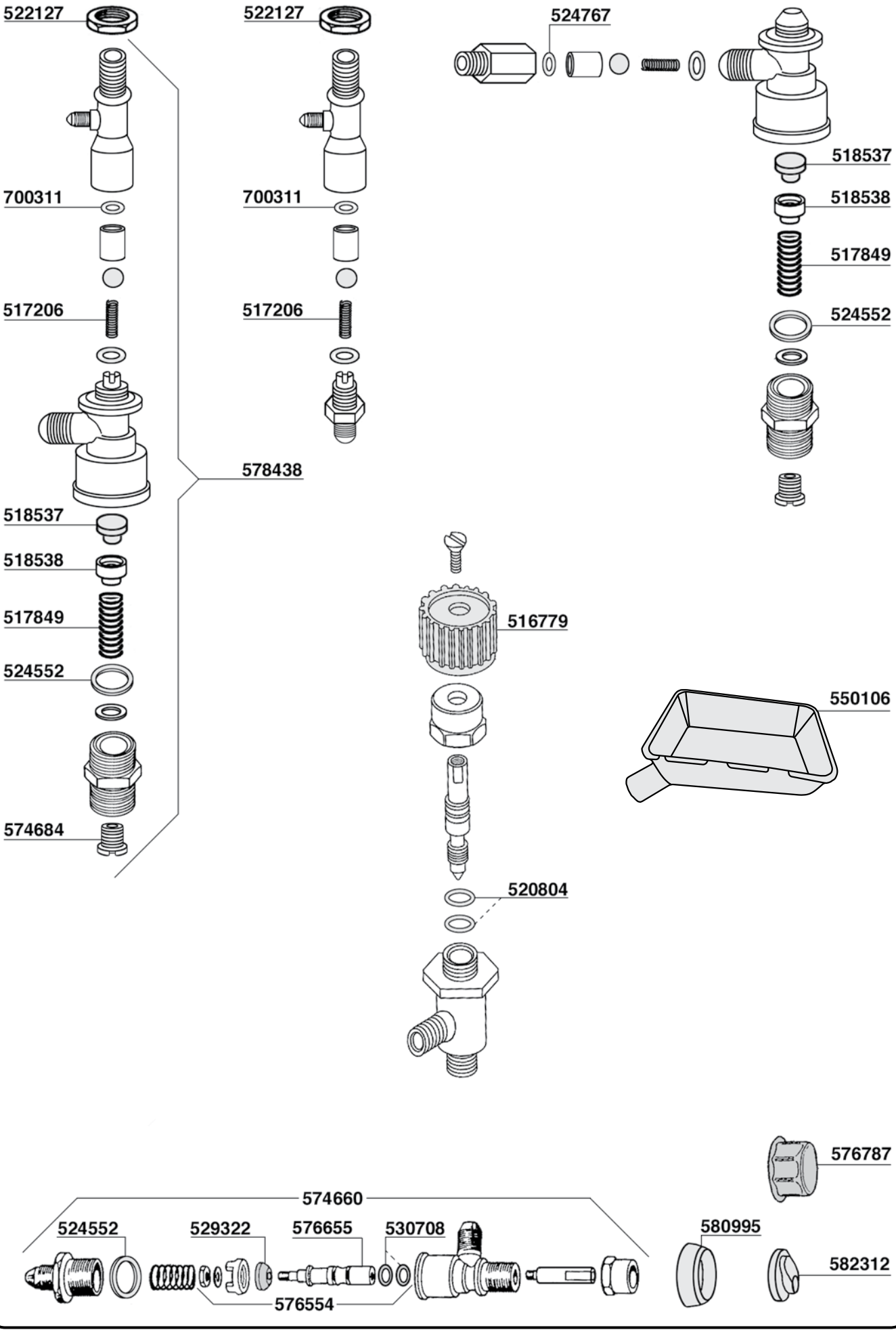
522127
522127
524767
700311
700311
518537
518538
517849
517206
517206
524552
578438
518537
518538
517849
524552
574684
516779
550106
520804
576787
574660
524552
529322
576655
530708
580995
582312
576554

182

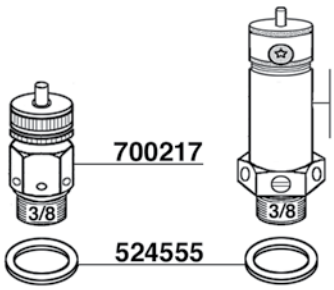
700217
615624/A
certificato
certified
3/8
3/8
524555

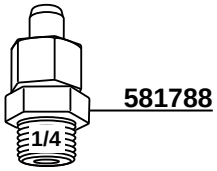
581788
1/4

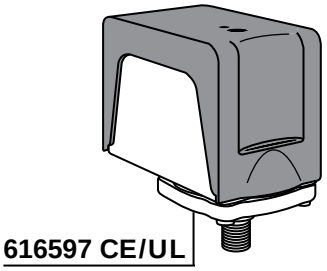
616597 CE/UL

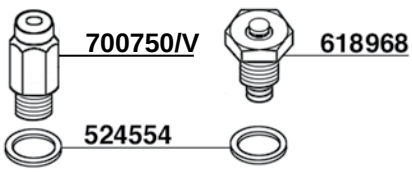
700750/V
618968
618970
524554

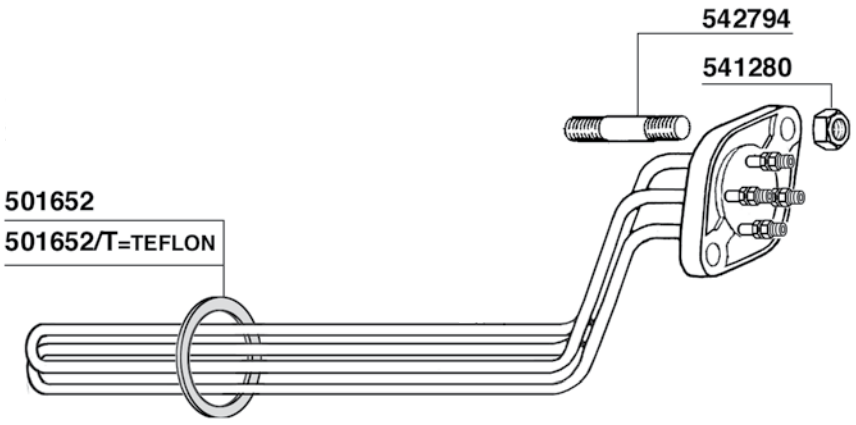
542794
541280
501652
501652/T=TEFLON

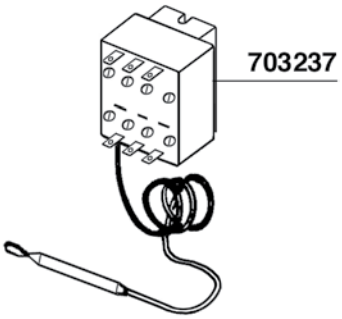
703237

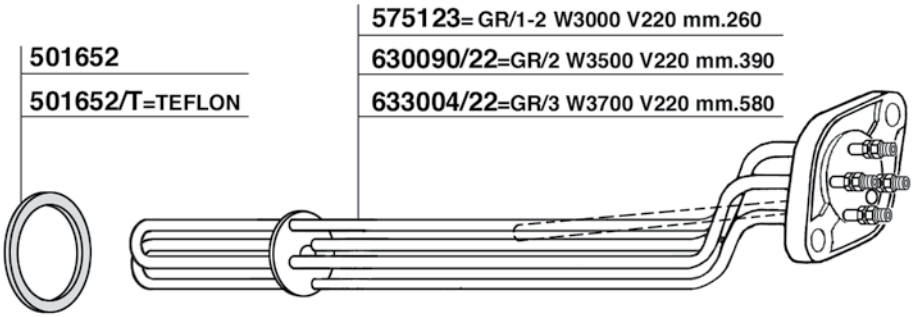
575123= GR/1-2 W3000 V220 mm.260
630090/22=GR/2 W3500 V220 mm.390
633004/22=GR/3 W3700 V220 mm.580
501652
501652/T=TEFLON

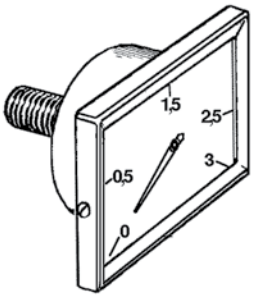
0,5
1,5
2,5
3
0

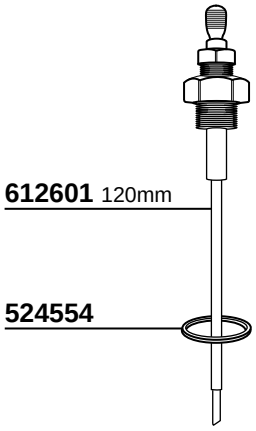
612601 120mm
524554

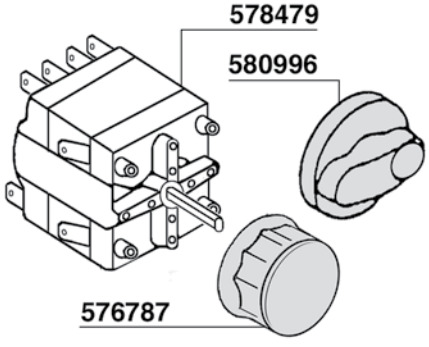
578479
580996
576787

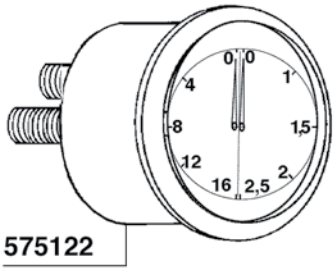
0
0
1
4
8
1,5
12
16
2,5
2
575122



514418 6gr
521830 7gr
521832 8gr
521833 7gr
MICROFORI
MICROHOLES



521994 14gr
514419 14gr ridgeless
516575 12gr
526208 18gr
700757 21gr
526758 24gr
521996 14gr
MICROFORI
MICROHOLES



521902

573525/G



573525

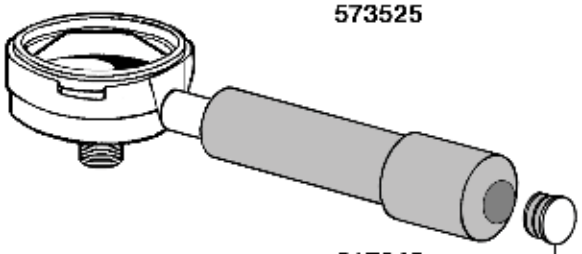

617940
TAPPO CROMATO
CHROMATE PLUG

612143=Ø1,1
612142=Ø1,2

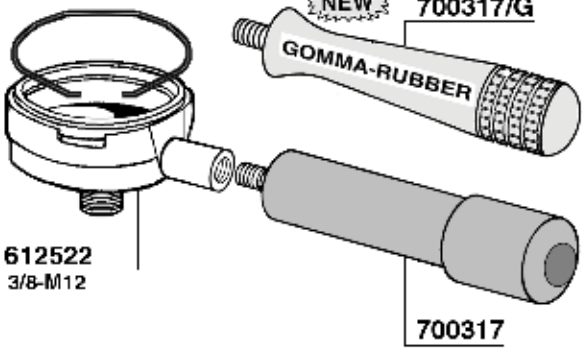

700317/G

612522
3/8-M12

700317



502003



700024



511672



511672/R
FLUSSO REGOLABILE
ADJUSTABLE FLOW



620579/2



541160

612603



613008
O-RING



513843
25x31x3,5



518635



527001



514816

524552

528662

541160

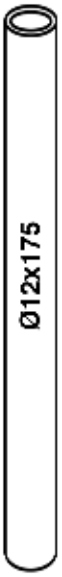

510006

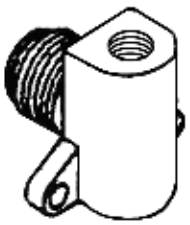

579665

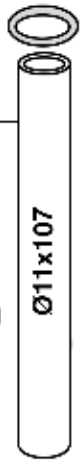

510000

617730 =V220
617730/11=V110



579665



184

700290
700290/R=RAME-COPPER

700568

620403

524767

619292

100°

M4

TE93-TD93

700562

518608
518610 VITON

700150=8,5mm
700146=9mm

524554

700542

700288

700162

547101

552349

1 CAFFE'

700255=7gr.

2 CAFFE'

700256=14gr.

BLIND FILTER

521902

PARKER

615978

700153/22=V220/50/60
700153/11=V110/60
700270 =V24/50/60

551934

700158

615978

PARKER

700179/22=V220/50/60
700179/11=V110/60
700156 =V24/50/60

620664
FILTER

400831
O-RING

620665=GIGLEUR Ø 0,6
620666=GIGLEUR Ø 0,8

579671
NERO/ BLACK

618010

700247
SPIA ROSSA
RED PILOT LIGHT

612143
700257
700258
541064
700291

700292

700565/G
GOMMA-RUBBER

700565
617940
TAPPO CROMATO
CHROMATE PLUG

612143=Ø1,1
612142=Ø1,2
700567
617938

502003
511672
700024

3/8
511672/R
NEW
FLUSSO REGOLABILE
ADJUSTABLE FLOW

700616
GOMMA-RUBBER
NEW

ORIGINAL
620713
620713/5
PULSANTIERA - TOUCH PAD

620713
GICAR
PULSANTIERA
DOS.MASK + TEA
Cod. 9.9.12.14

620713/5
GICAR
PULSANTIERA
DOS. 3D5
Cod. 9.9.11.76

ORIGINAL
620710=V220
620710/11=V110
PULSANTIERA+CENTRALINA
TOUCH PAD+ELECTRONIC BOX

PULSANTIERA+CENTRALINA
TOUCH PAD+ELECTRONIC BOX
620702/A=GR1 V220
GICAR 9.5.28.14
REGOLAZIONE DIRETTA
DIRECT REGULATION

GR2-3 V220

620712	=GICAR	9.5.14.59 00 / 9.5.14.60 00
620712/1	=GICAR	9.5.14.59 01 / 9.5.14.60 01
620712/2	=GICAR	9.5.14.59 02 / 9.5.14.60 02
620712/3	=GICAR	9.5.14.59 03 / 9.5.14.60 03



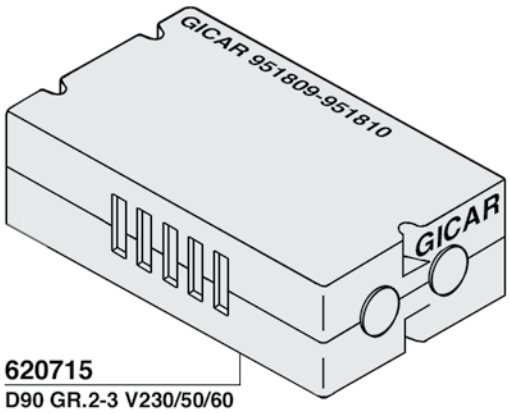

620715
D90 GR.2-3 V230/50/60

700573=V220/50
700572=V24/50

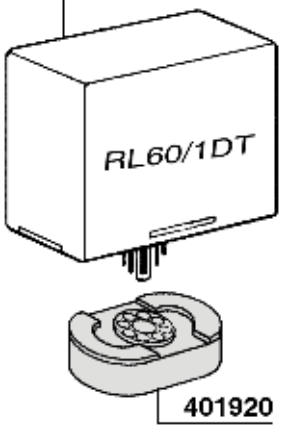

401920

700574=V220/50
700574/11=V110/60

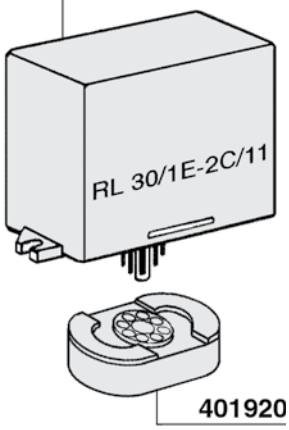

401920

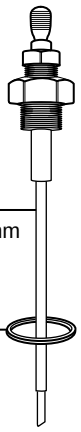

612601 120mm
612601/L 140mm

612603

COIL BOBINA
700179/22=V220
700179/11=V110

615978

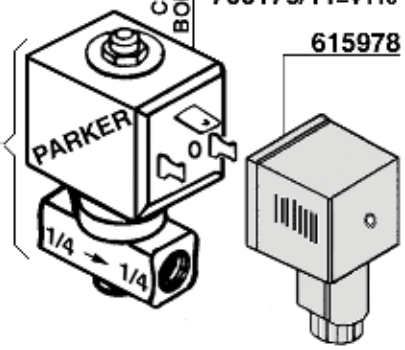

632017/22=V220
632017/11=V110

615978/T

615979

617903/G

530143

551937

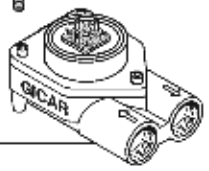

620405

530135
700578
700589
310402
522127
700606
700590
700272
700274
530126 VITON
310404
310405
310406
530134
310407
700309
700586/7
700588
310408

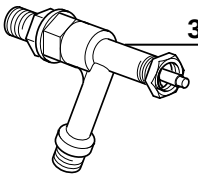

310409

700605
700169/M
700456
700293
700578
700589
620669
700606
700590
700600
700272
700341
522127
700274
530126 VITON

620668

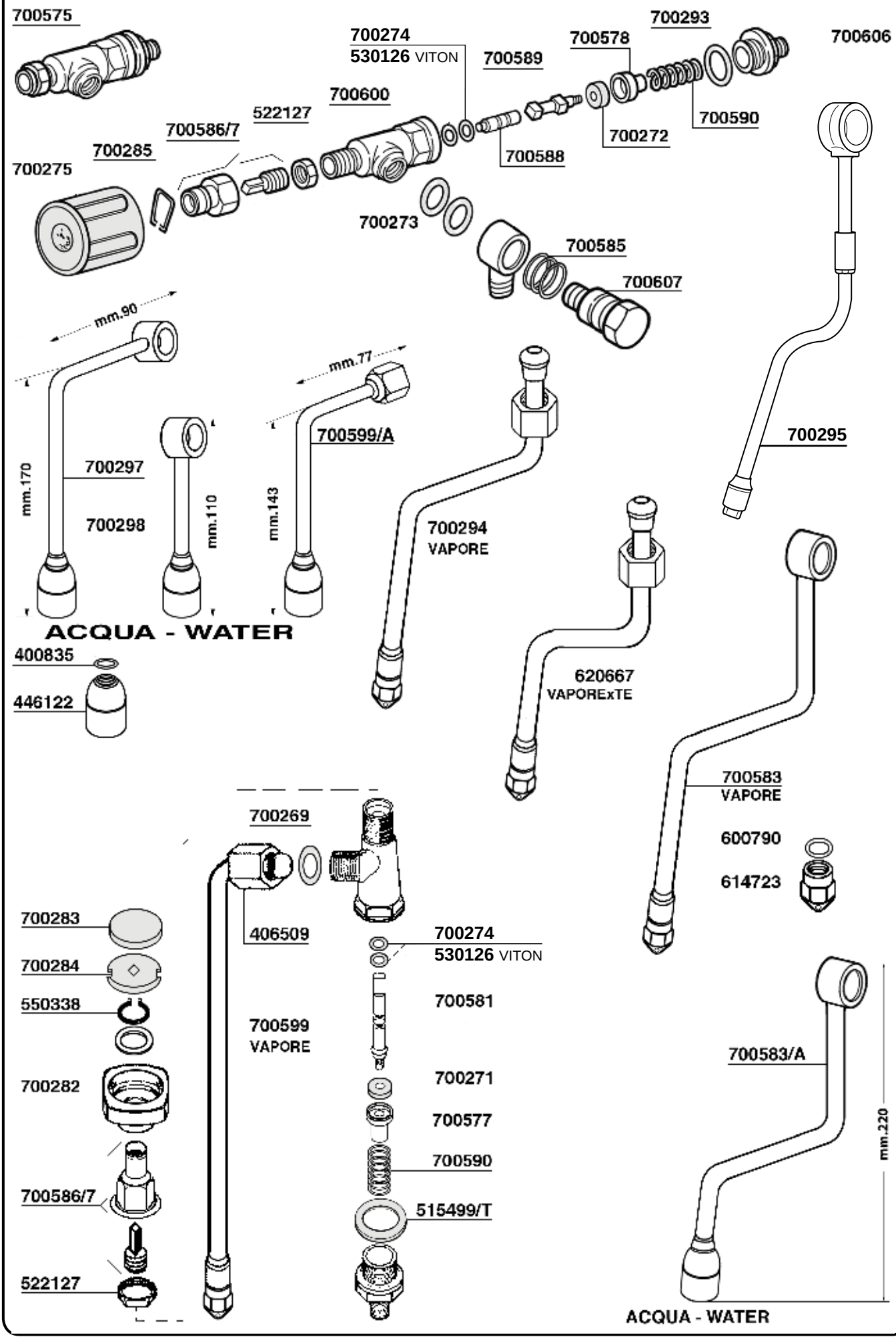
700575
700274
530126 VITON
700589
700578
700293
700606
700600
522127
700586/7
700285
700275
700272
700590
700588
700273
700585
700607
mm.90
mm.77
700599/A
700295
mm.170
700297
700298
mm.110
mm.143
700294
VAPORE
620667
VAPOREXTE
ACQUA - WATER
400835
446122
700583
VAPORE
600790
614723
700269
406509
700283
700284
550338
700282
700586/7
522127
700599
VAPORE
700274
530126 VITON
700581
700271
700577
700590
515499/T
700583/A
mm.220
ACQUA - WATER

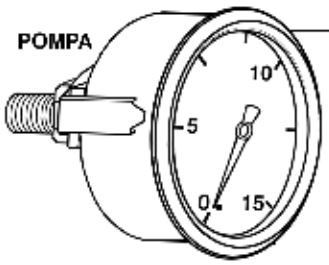

700595
Ø52mm.

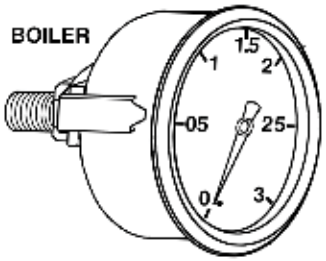

700594
Ø52mm.

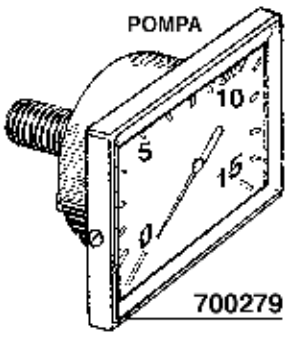

700279

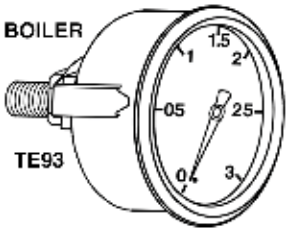

700594/T
Ø40mm.

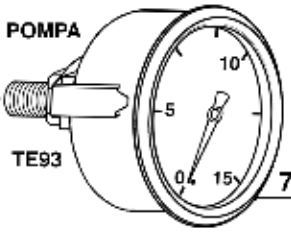

700595/T
Ø40mm.

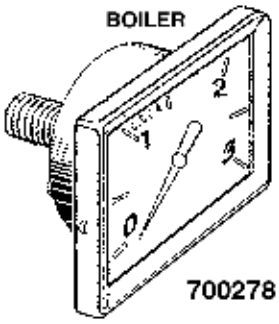

700278

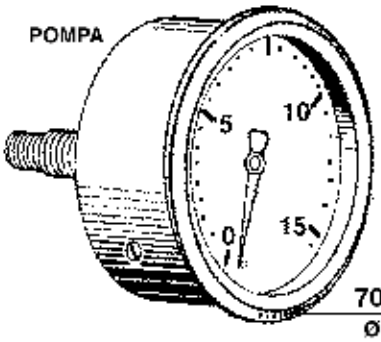

700281
Ø60mm.

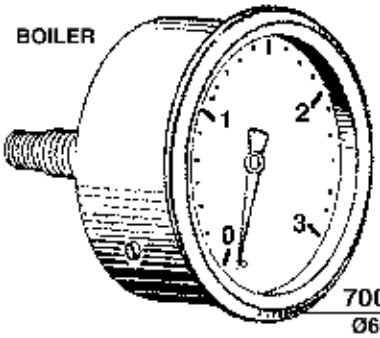

700280
Ø60mm.

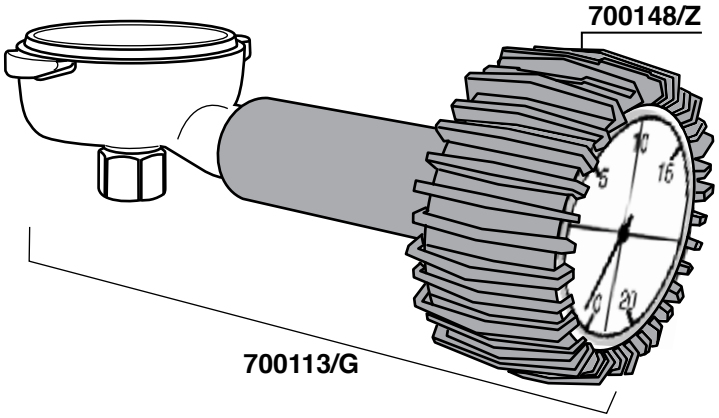

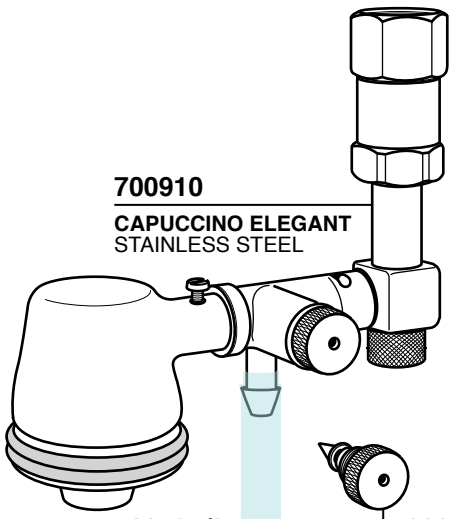

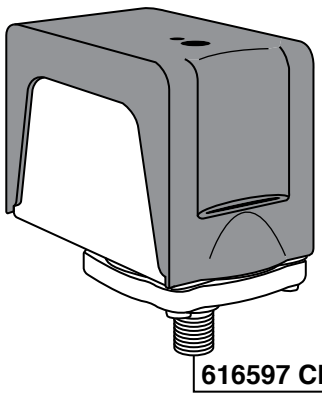

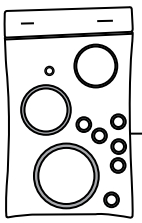

700913
KIT O-RING

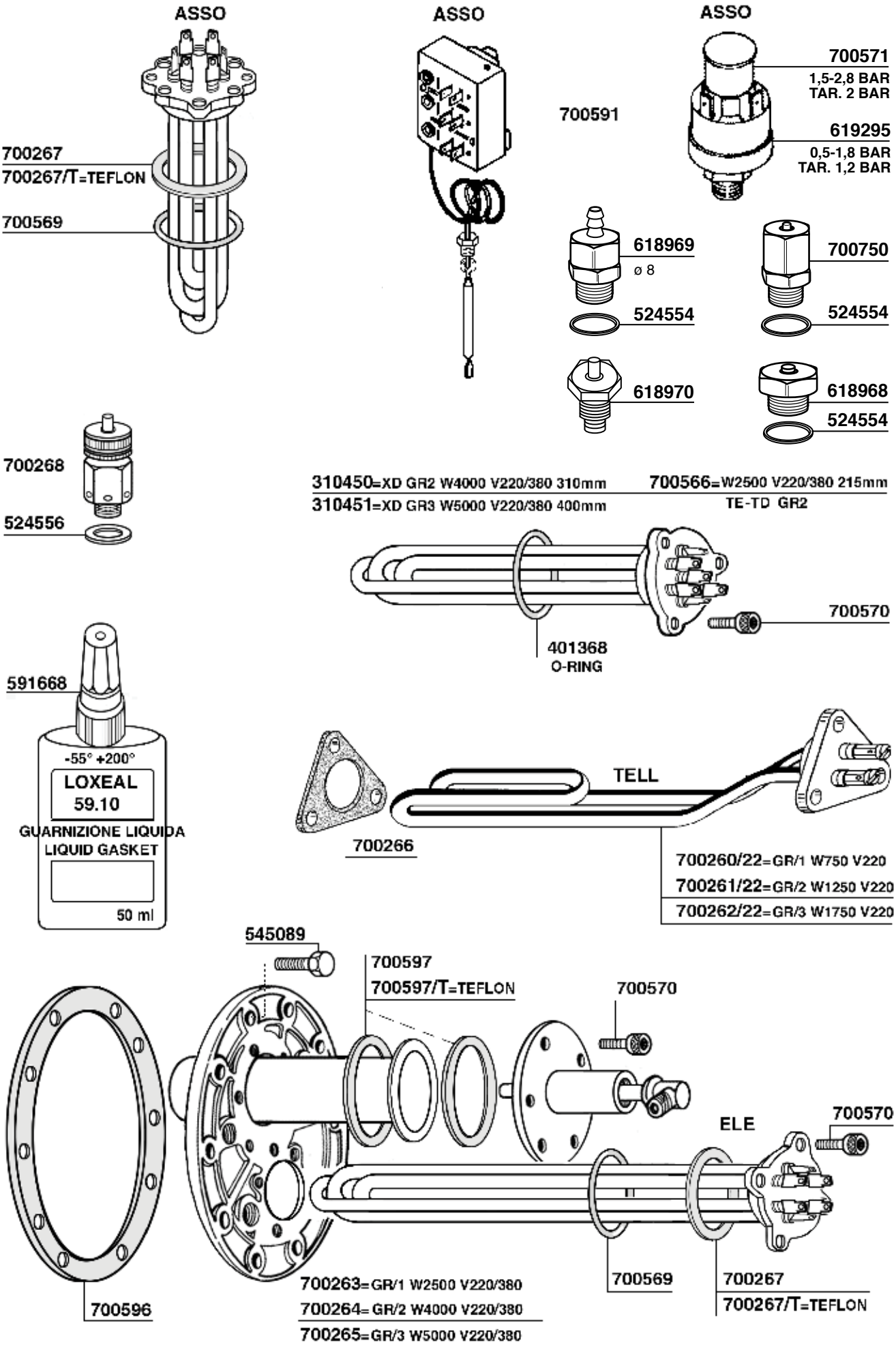
ASSO
700267
700267/T=TEFLON
700569
ASSO
700591
ASSO
700571
1,5-2,8 BAR
TAR. 2 BAR
619295
0,5-1,8 BAR
TAR. 1,2 BAR
618969
ø 8
524554
700750
524554
618970
618968
524554
700268
524556
310450=XD GR2 W4000 V220/380 310mm
310451=XD GR3 W5000 V220/380 400mm
700566=W2500 V220/380 215mm
TE-TD GR2
700570
401368
O-RING
591668
-55° +200°
LOXEAL
59.10
GUARNIZIONE LIQUIDA
LIQUID GASKET
50 ml
TELL
700266
700260/22=GR/1 W750 V220
700261/22=GR/2 W1250 V220
700262/22=GR/3 W1750 V220
545089
700597
700597/T=TEFLON
700570
ELE
700570
700596
700263=GR/1 W2500 V220/380
700264=GR/2 W4000 V220/380
700265=GR/3 W5000 V220/380
700569
700267
700267/T=TEFLON

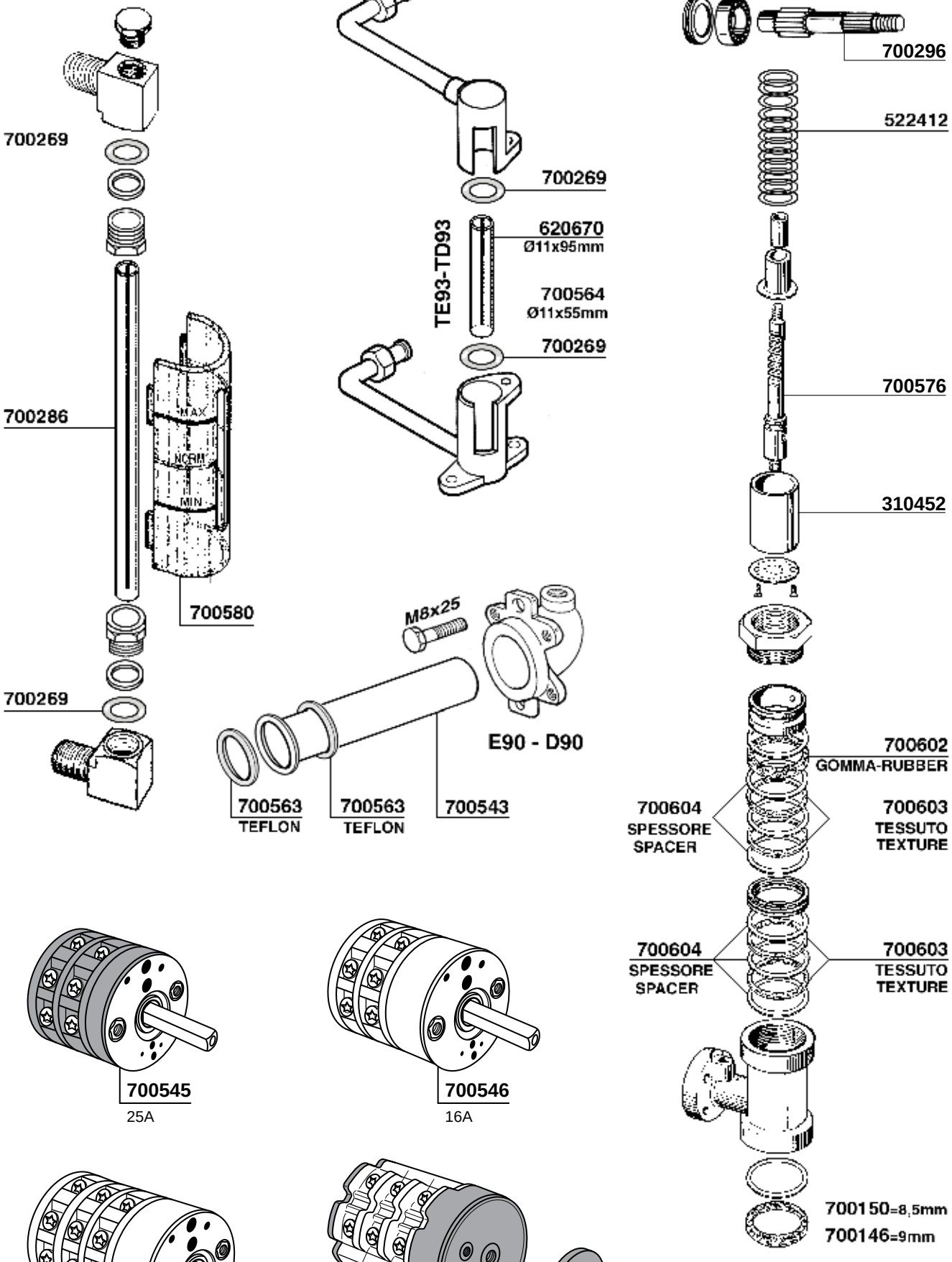
700269
700286
MAX
NORM
MIN
700580
700269
700269
TE93-TD93
620670
Ø11x95mm
700564
Ø11x55mm
700269
700296
522412
700576
310452
M6x25
E90 - D90
700563
TEFLON
700563
TEFLON
700543
700602
GOMMA-RUBBER
700604
SPESSORE
SPACER
700603
TESSUTO
TEXTURE
700604
SPESSORE
SPACER
700603
TESSUTO
TEXTURE
700150=8,5mm
700146=9mm
700545
25A
700546
16A
700544
25A - 4 POS.
700520
32A - 4 POS.
700549

BABY

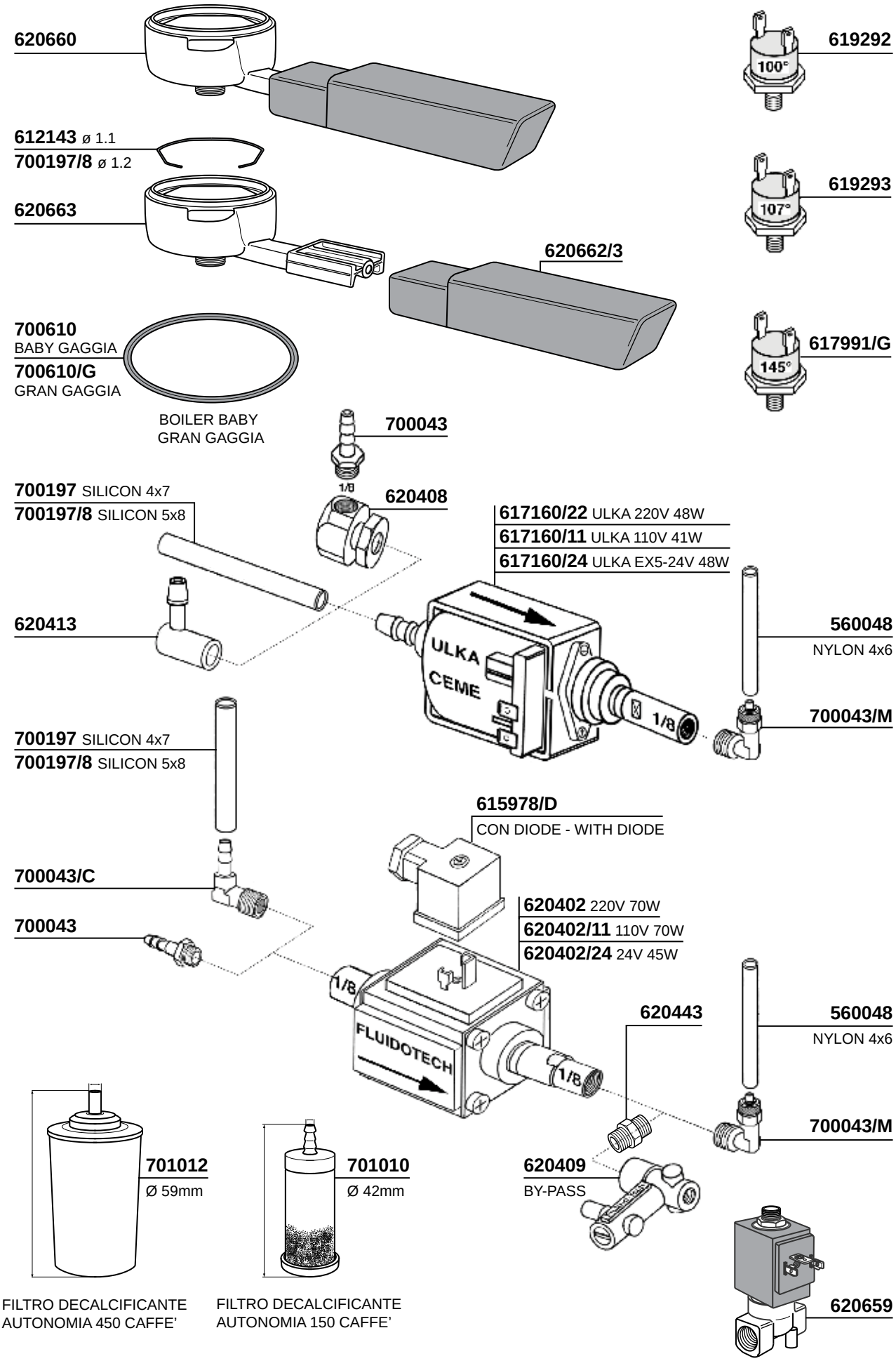
620660
612143 ø 1.1
700197/8 ø 1.2
620663
620662/3
700610
BABY GAGGIA
700610/G
GRAN GAGGIA
BOILER BABY
GRAN GAGGIA
619292
100°
619293
107°
617991/G
145°
700043
620408
1/8
700197 SILICON 4x7
700197/8 SILICON 5x8
620413
617160/22 ULKA 220V 48W
617160/11 ULKA 110V 41W
617160/24 ULKA EX5-24V 48W
ULKA
CEME
560048
NYLON 4x6
700043/M
700197 SILICON 4x7
700197/8 SILICON 5x8
615978/D
CON DIODE - WITH DIODE
700043/C
700043
620402 220V 70W
620402/11 110V 70W
620402/24 24V 45W
FLUIDOTECH
620443
560048
NYLON 4x6
700043/M
701012
Ø 59mm
701010
Ø 42mm
620409
BY-PASS
620659
FILTRO DECALCIFICANTE
AUTONOMIA 450 CAFFE'
FILTRO DECALCIFICANTE
AUTONOMIA 150 CAFFE'

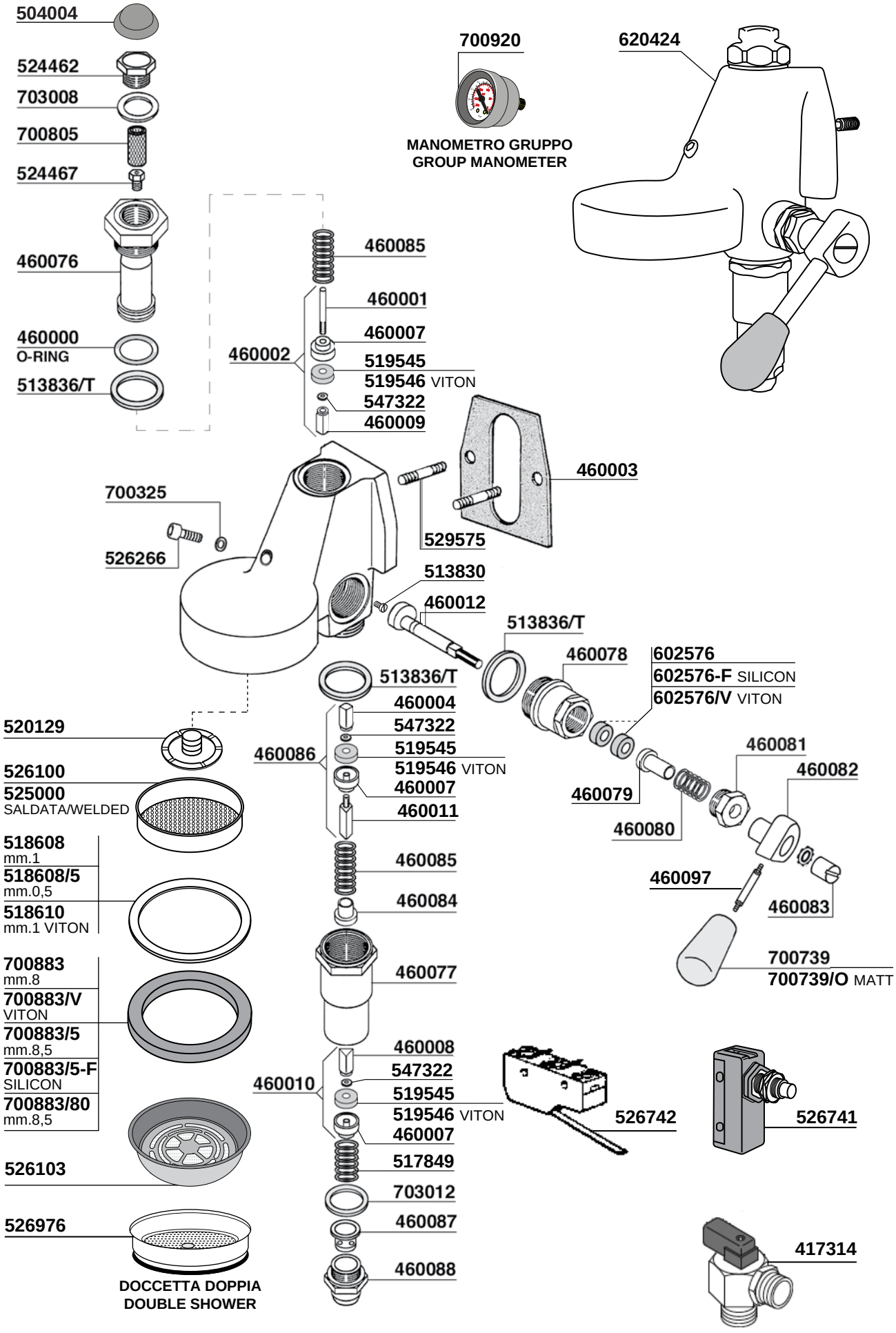
504004
524462
703008
700805
524467
460076
460000
O-RING
513836/T
700920
MANOMETRO GRUPPO
GROUP MANOMETER
620424
460085
460001
460007
460002
519545
519546 VITON
547322
460009
460003
700325
526266
529575
513830
460012
513836/T
460078
602576
602576-F SILICON
602576/V VITON
513836/T
460004
547322
460086
519545
519546 VITON
460007
460011
460081
460082
460079
460080
460085
460084
460097
460083
700739
700739/O MATT
460077
520129
526100
525000
SALDATA/WELDED
518608
mm.1
518608/5
mm.0,5
518610
mm.1 VITON
700883
mm.8
700883/V
VITON
700883/5
mm.8,5
700883/5-F
SILICON
700883/80
mm.8,5
460008
547322
460010
519545
519546 VITON
460007
526742
526741
526103
517849
703012
460087
526976
460088
417314
DOCCETTA DOPPIA
DOUBLE SHOWER

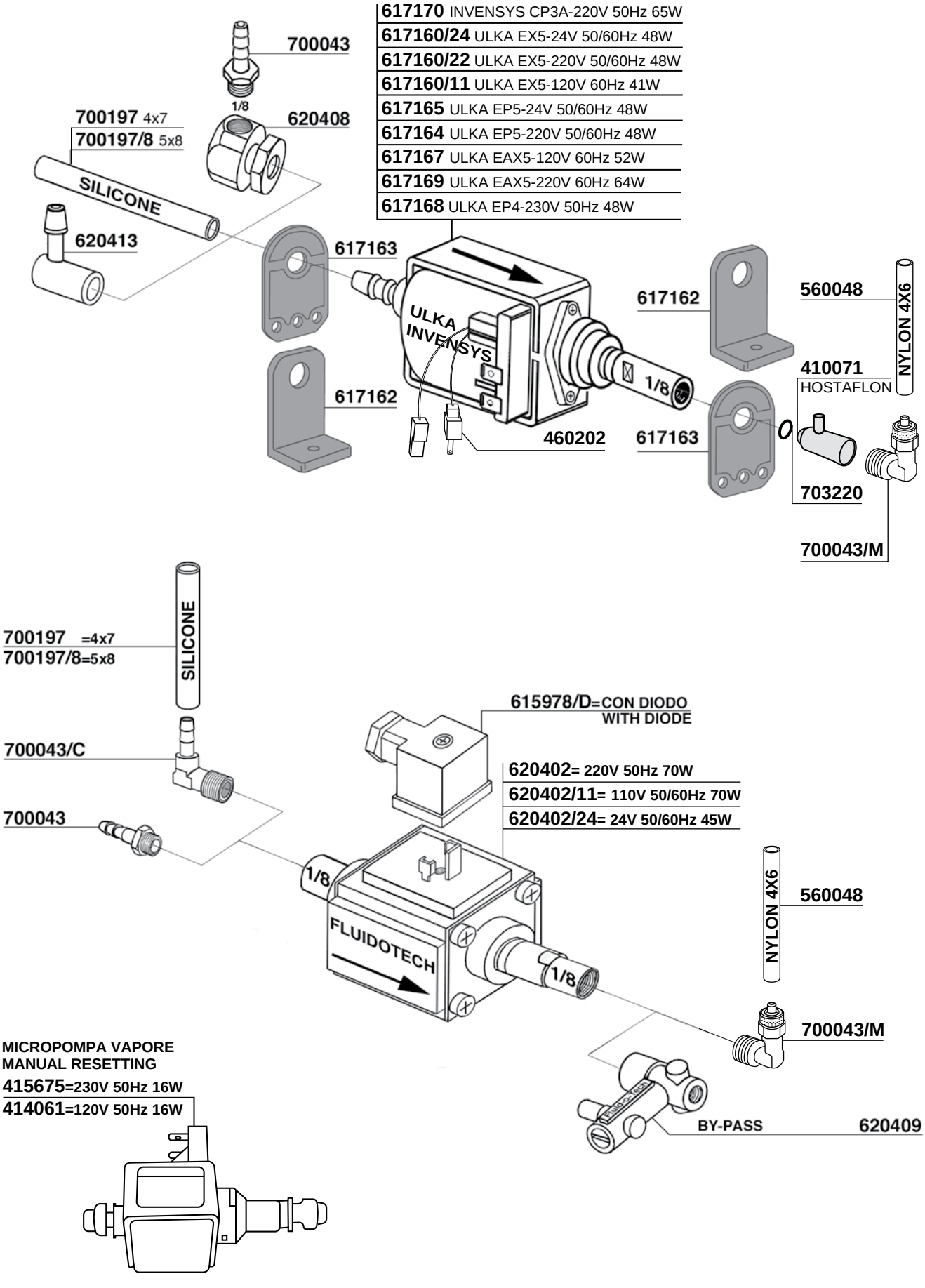
617170 INVENSYS CP3A-220V 50Hz 65W
617160/24 ULKA EX5-24V 50/60Hz 48W
617160/22 ULKA EX5-220V 50/60Hz 48W
617160/11 ULKA EX5-120V 60Hz 41W
617165 ULKA EP5-24V 50/60Hz 48W
617164 ULKA EP5-220V 50/60Hz 48W
617167 ULKA EAX5-120V 60Hz 52W
617169 ULKA EAX5-220V 60Hz 64W
617168 ULKA EP4-230V 50Hz 48W
700043
1/8
620408
700197 4x7
700197/8 5x8
SILICONE
620413
617163
617162
ULKA
INVENSYS
1/8
460202
617162
617163
560048
NYLON 4X6
410071
HOSTAFLON
703220
700043/M
700197 =4x7
700197/8=5x8
SILICONE
700043/C
700043
615978/D=CON DIODO
WITH DIODE
620402= 220V 50Hz 70W
620402/11= 110V 50/60Hz 70W
620402/24= 24V 50/60Hz 45W
1/8
FLUIDOTECH
1/8
NYLON 4X6
560048
700043/M
BY-PASS
620409
MICROPOMPA VAPORE
MANUAL RESETTING
415675=230V 50Hz 16W
414061=120V 50Hz 16W

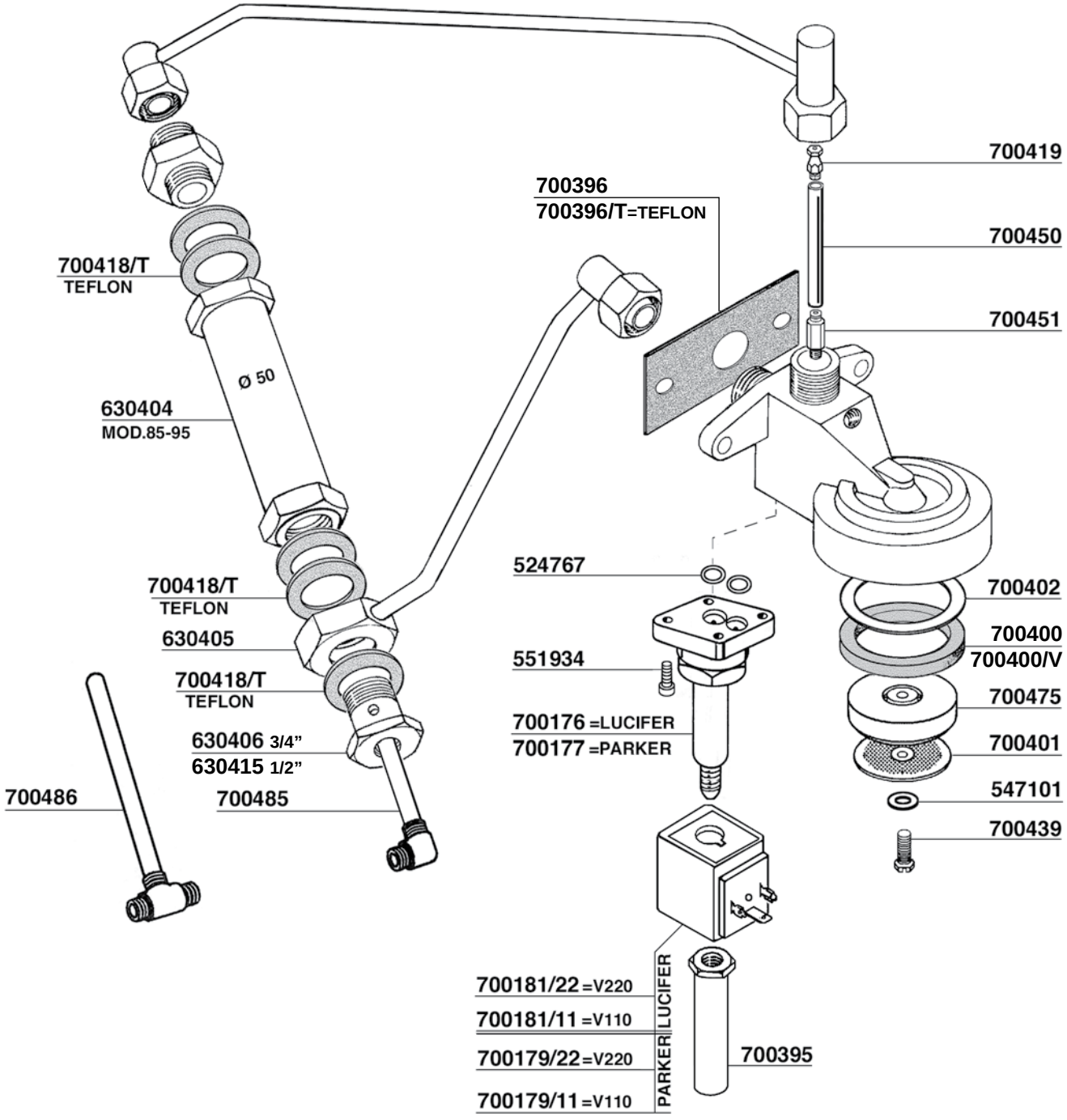
700419
700396
700396/T=TEFLON
700450
700418/T
TEFLON
700451
Ø 50
630404
MOD.85-95
524767
700402
700418/T
TEFLON
630405
551934
700400
700400/V
700418/T
TEFLON
700176 =LUCIFER
700177 =PARKER
700475
630406 3/4"
630415 1/2"
700401
700486
700485
547101
700439
700181/22 =V220
700181/11 =V110
700179/22 =V220
700179/11 =V110
LUCIFER
PARKER
700395

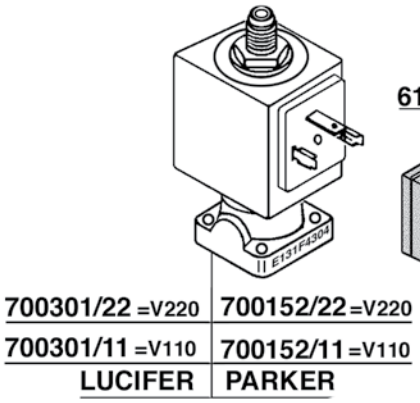
615978
700301/22 =V220
700301/11 =V110
LUCIFER
700152/22 =V220
700152/11 =V110
PARKER

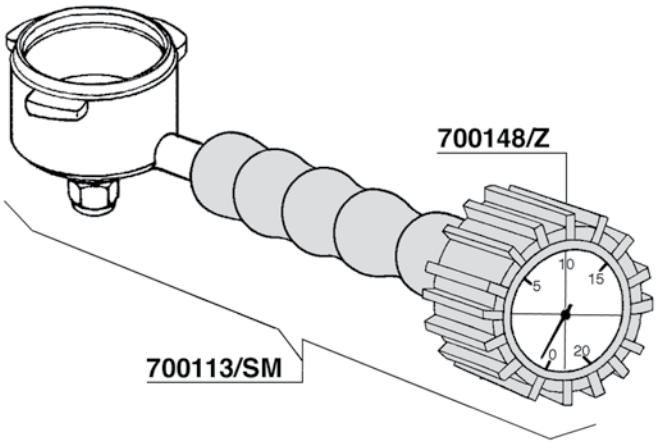
700148/Z
700113/SM

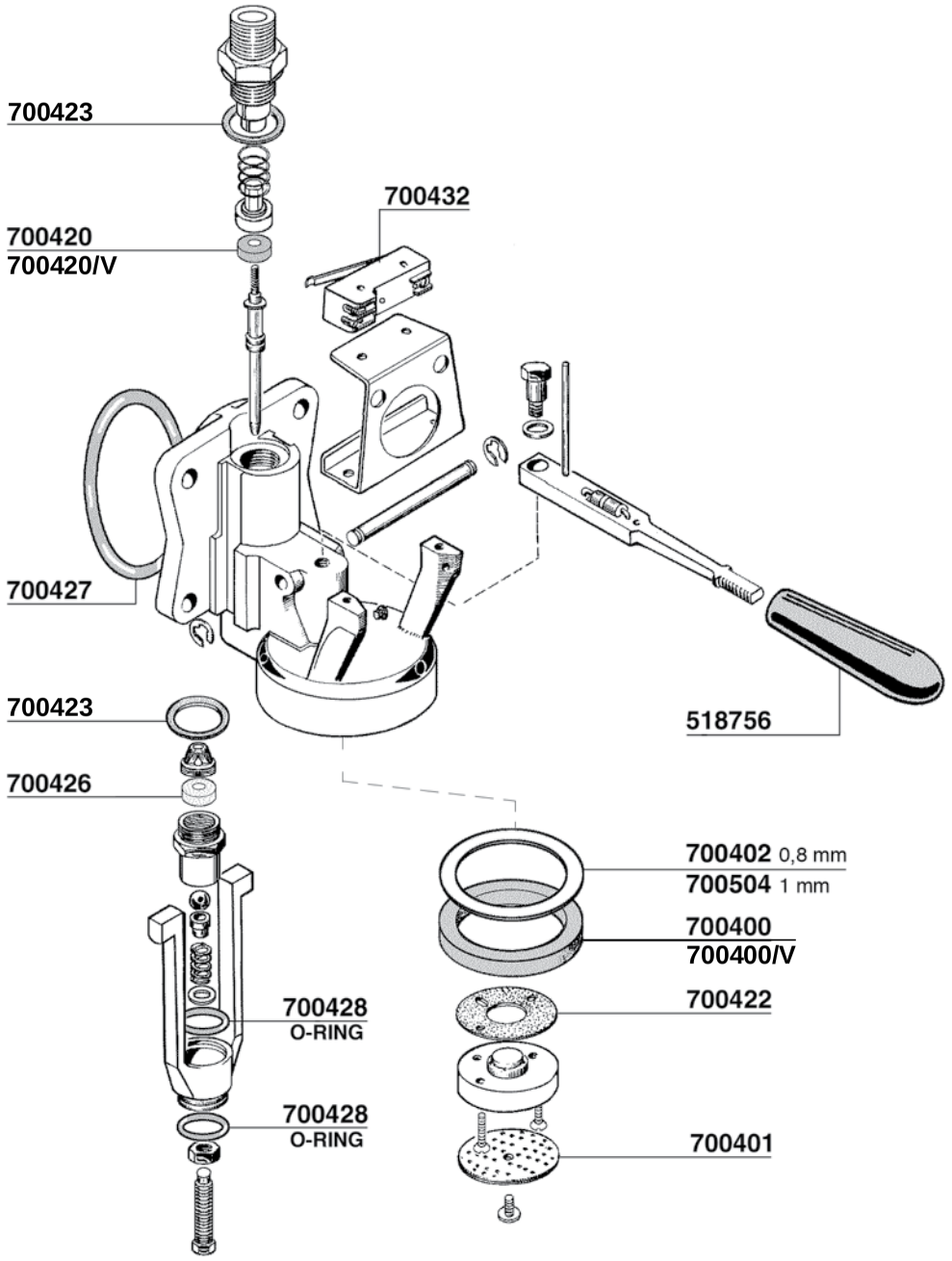
700423
700420
700420/V
700432
700427
700423
700426
518756
700402 0,8 mm
700504 1 mm
700400
700400/V
700422
700428
O-RING
700428
O-RING
700401

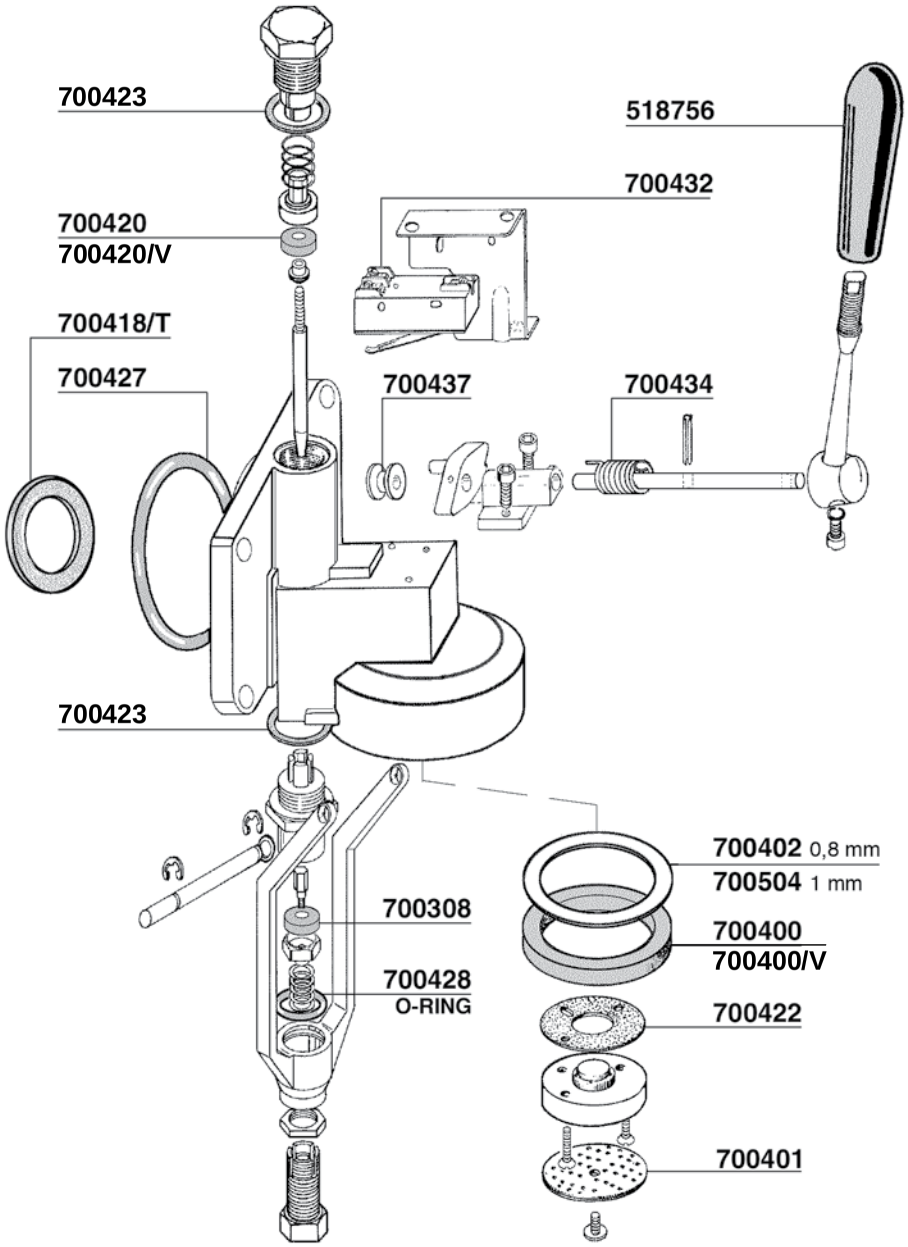
700423
700420
700420/V
700418/T
700427
518756
700432
700437
700434
700423
700308
700428
O-RING
700402 0,8 mm
700504 1 mm
700400
700400/V
700422
700401

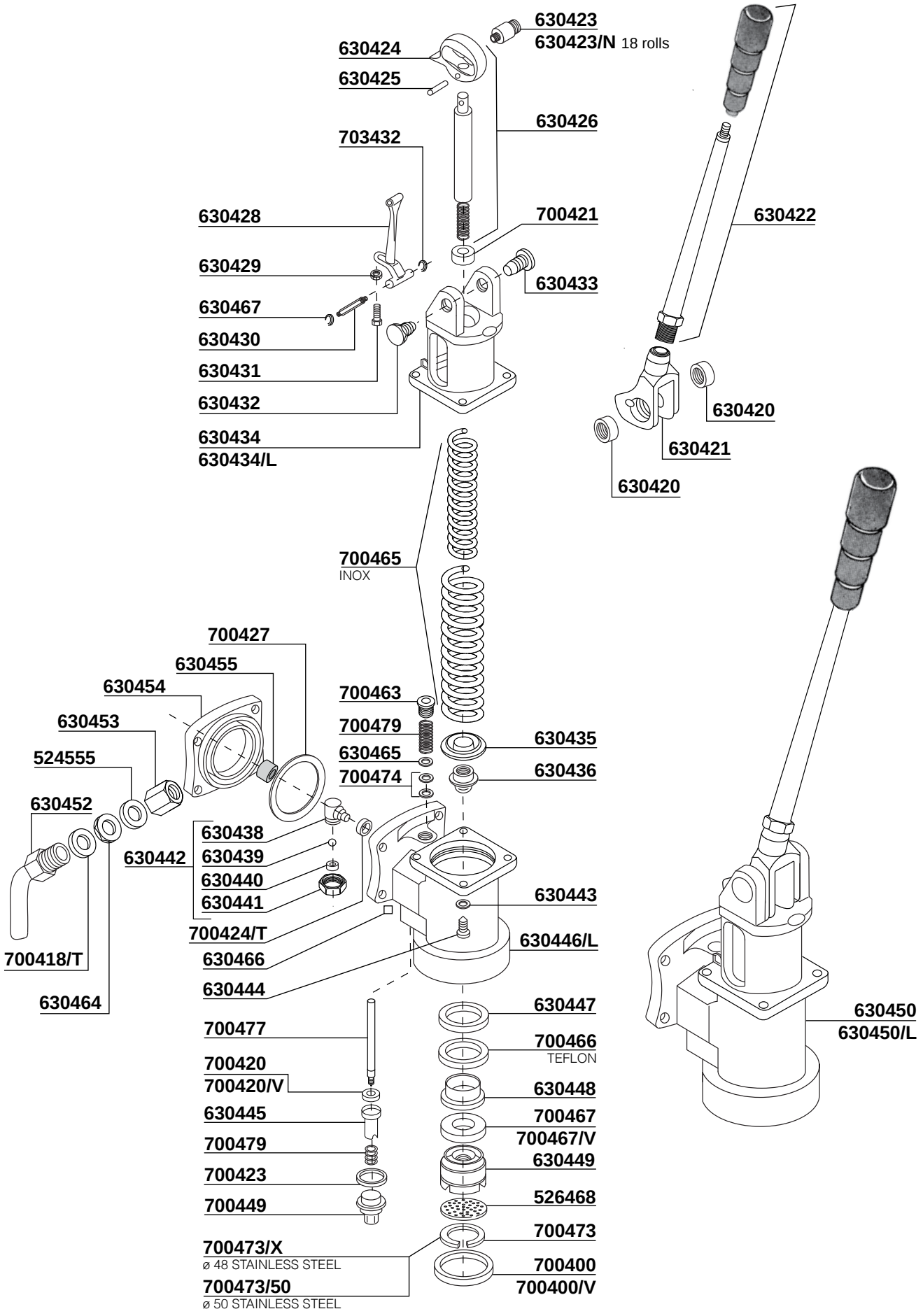
630423
630423/N 18 rolls
630424
630425
630426
703432
630428
700421
630422
630429
630433
630467
630430
630431
630432
630434
630434/L
630420
630421
630420
700465
INOX
700427
630455
630454
630453
524555
630452
700463
700479
630465
700474
630435
630436
630438
630439
630440
630441
630442
630443
700424/T
630446/L
700418/T
630466
630444
630464
630447
700477
700466
TEFLON
700420
700420/V
630448
630445
700467
700467/V
700479
630449
700423
526468
700449
700473
700473/X
ø 48 STAINLESS STEEL
700400
700473/50
700400/V
ø 50 STAINLESS STEEL
630450
630450/L

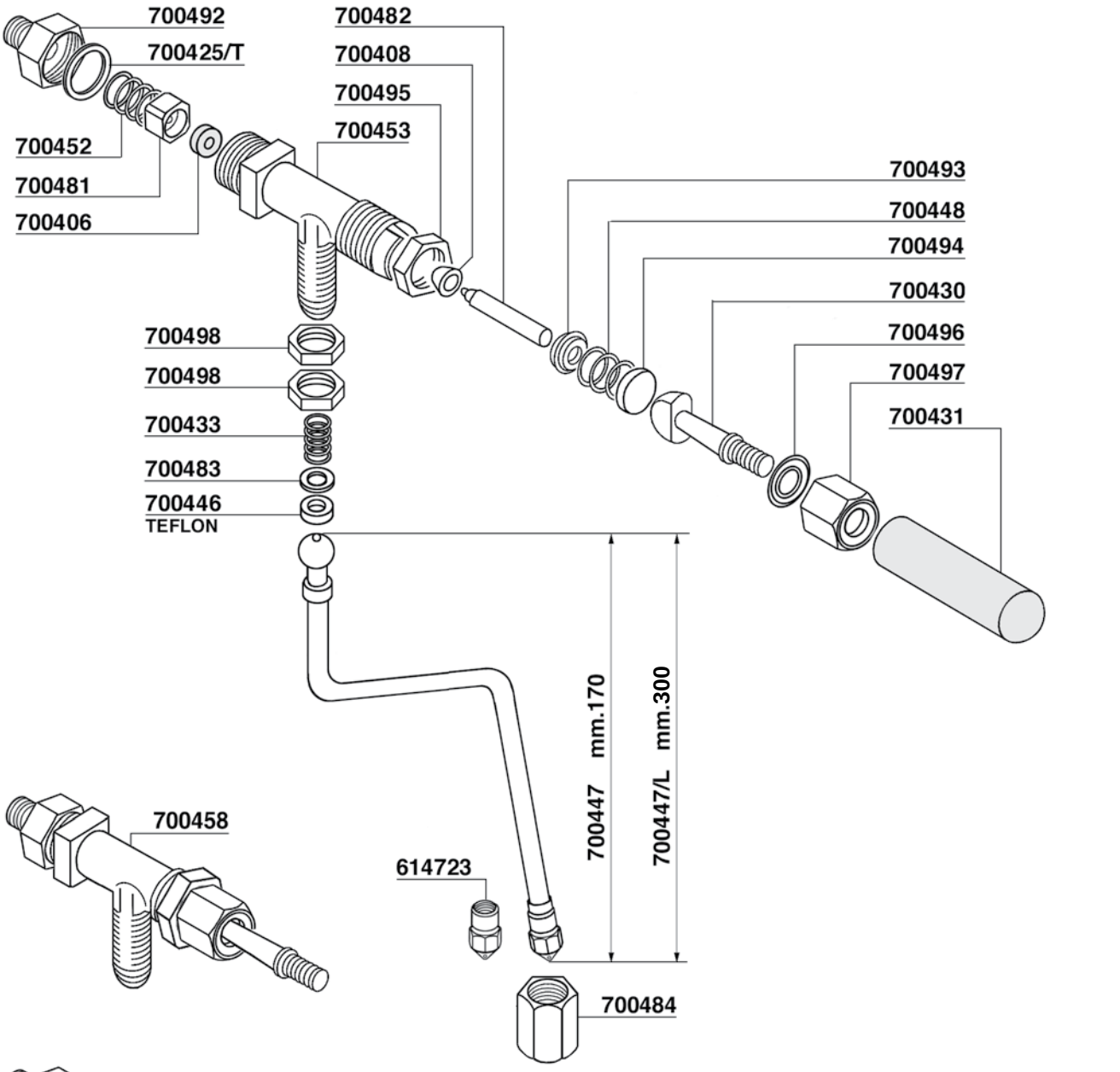
700492
700425/T
700452
700481
700406
700482
700408
700495
700453
700493
700448
700494
700430
700496
700497
700431
700498
700498
700433
700483
700446
TEFLON
700447 mm.170
700447/L mm.300
614723
700484
700458

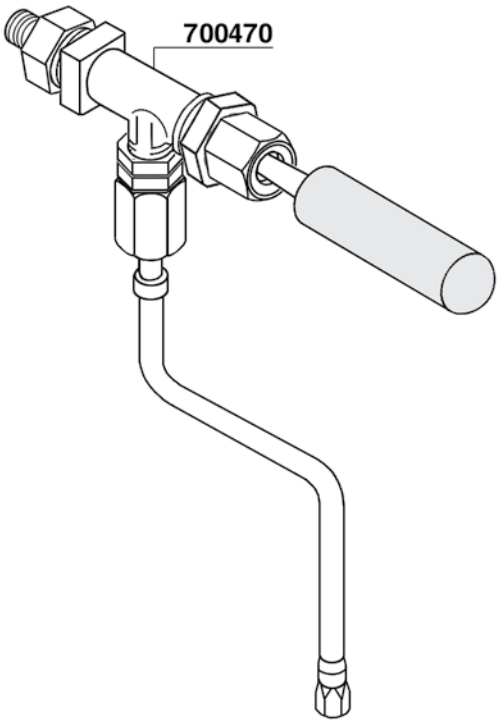
700470

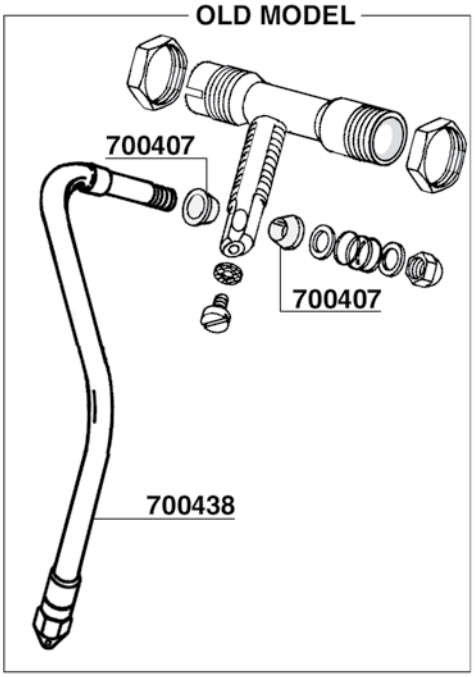
OLD MODEL
700407
700407
700438

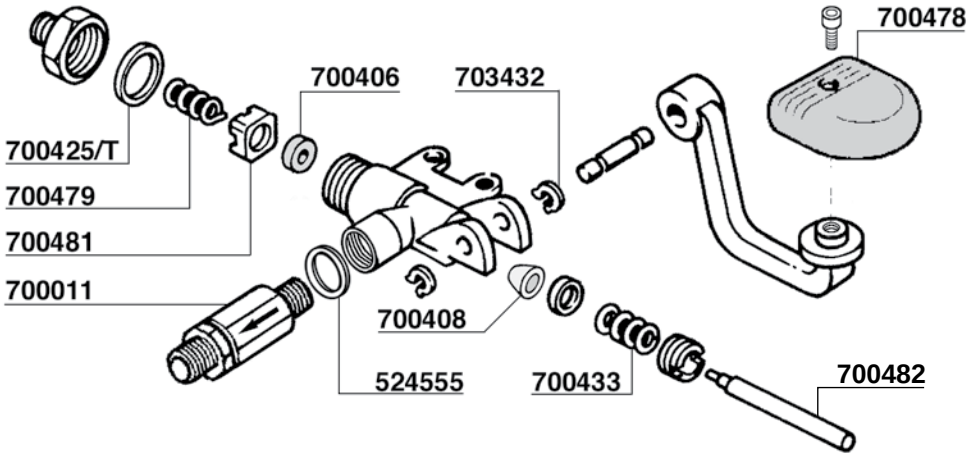
700478
700406
703432
700425/T
700479
700481
700011
700408
524555
700433
700482

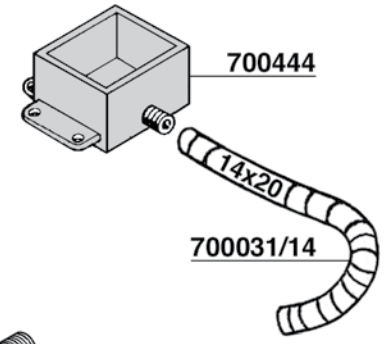
700444
14x20
700031/14

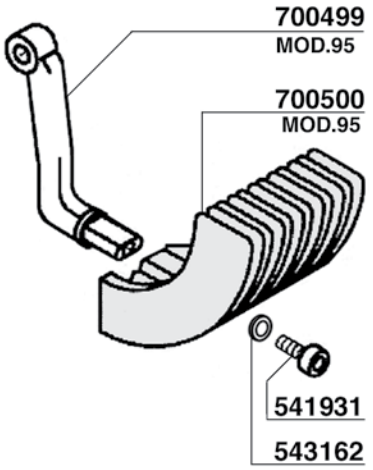
700499
MOD.95
700500
MOD.95
541931
543162

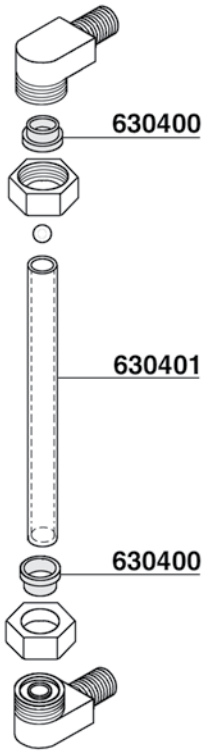
630400
630401
630400

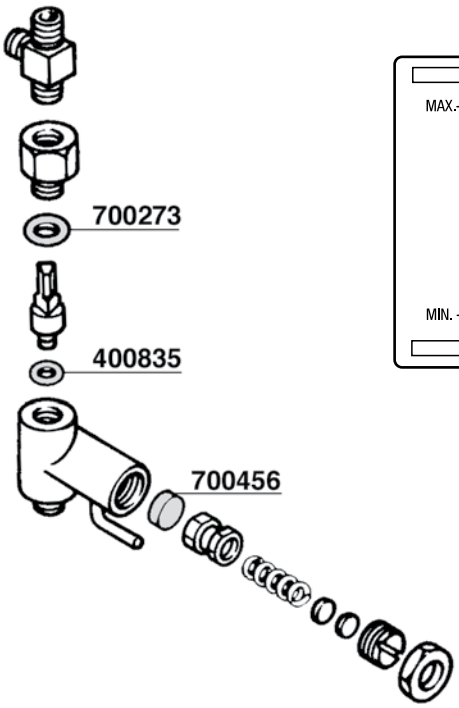
700273
400835
700456

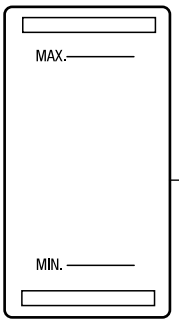
MAX.
MIN.
700461

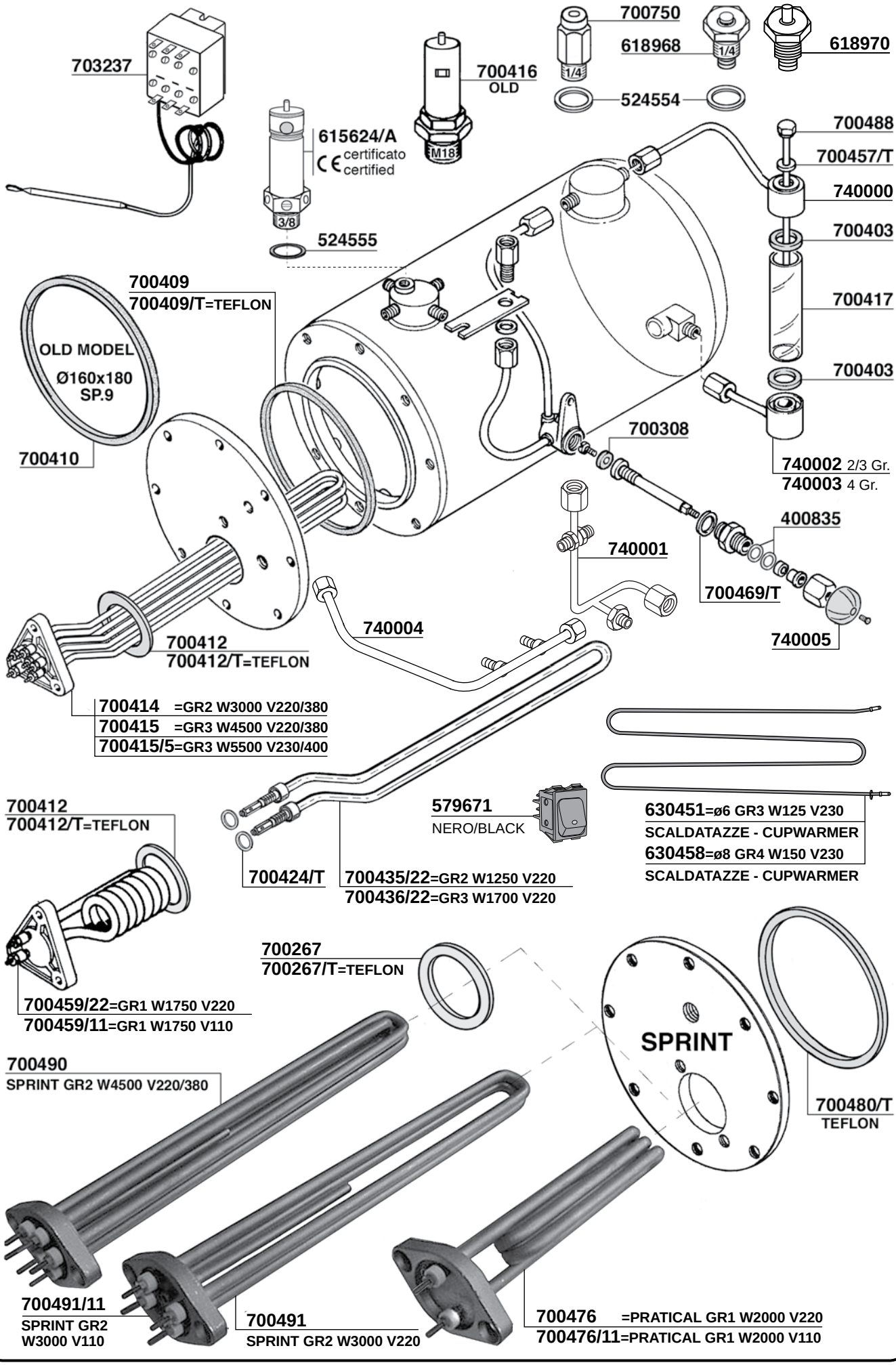
703237
700750
618968
1/4
618970
700416
OLD
M18
524554
615624/A
certificato
certified
3/8
524555
700488
700457/T
740000
700403
700417
700403
700409
700409/T=TEFLON
OLD MODEL
Ø160x180
SP.9
700410
700308
740002 2/3 Gr.
740003 4 Gr.
400835
740001
700469/T
740005
740004
700412
700412/T=TEFLON
700414 =GR2 W3000 V220/380
700415 =GR3 W4500 V220/380
700415/5=GR3 W5500 V230/400
579671
NERO/BLACK
630451=ø6 GR3 W125 V230
SCALDATAZZE - CUPWARMER
630458=ø8 GR4 W150 V230
SCALDATAZZE - CUPWARMER
700412
700412/T=TEFLON
700424/T
700435/22=GR2 W1250 V220
700436/22=GR3 W1700 V220
700267
700267/T=TEFLON
SPRINT
700480/T
TEFLON
700459/22=GR1 W1750 V220
700459/11=GR1 W1750 V110
700490
SPRINT GR2 W4500 V220/380
700491/11
SPRINT GR2
W3000 V110
700491
SPRINT GR2 W3000 V220
700476 =PRATICAL GR1 W2000 V220
700476/11=PRATICAL GR1 W2000 V110

200

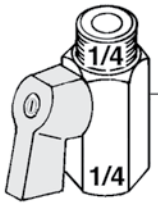

700170/V



700039

700440



MOLLA MOTORE MACININO
GRINDER MOTOR SPRING

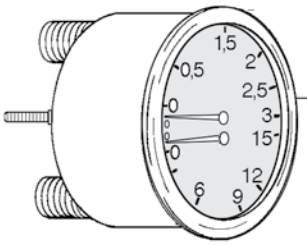

700411

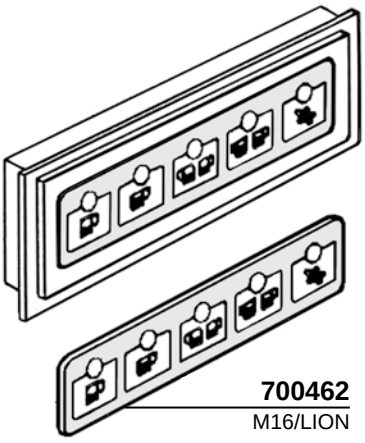

700462
M16/LION

700460

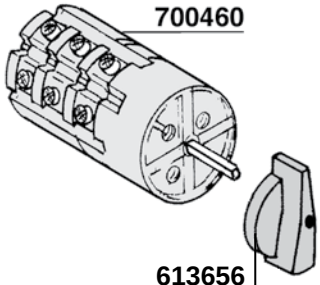

613656
630462
SERIE 85-95 LEVA



630416
SM85E

551937
530143
617903/G
615978/T
615979
620405

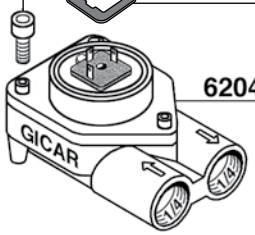

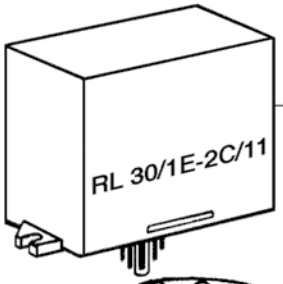

700574=V220
700574/11=V110

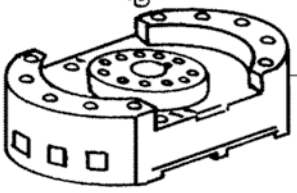

401920

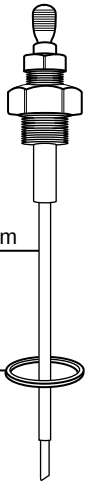

612601 120mm

524554



620205

THERMOMETER
0 - 100°C

COIL
BOBINA
700179/22=V220
700179/11=V110

615978

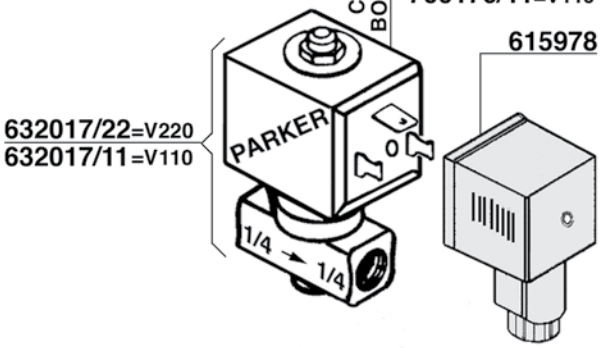

632017/22=V220
632017/11=V110

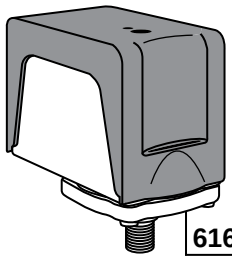

616597 CE/UL

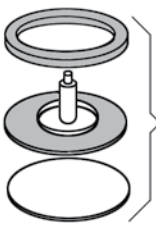

700124
Ø55mm

700464

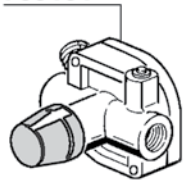

621080
PUSH BUTTON

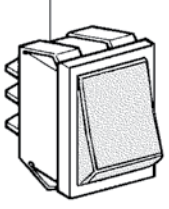

700429
INTERRUTTORE
SWITCH

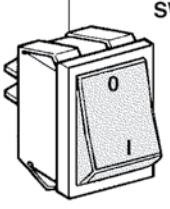

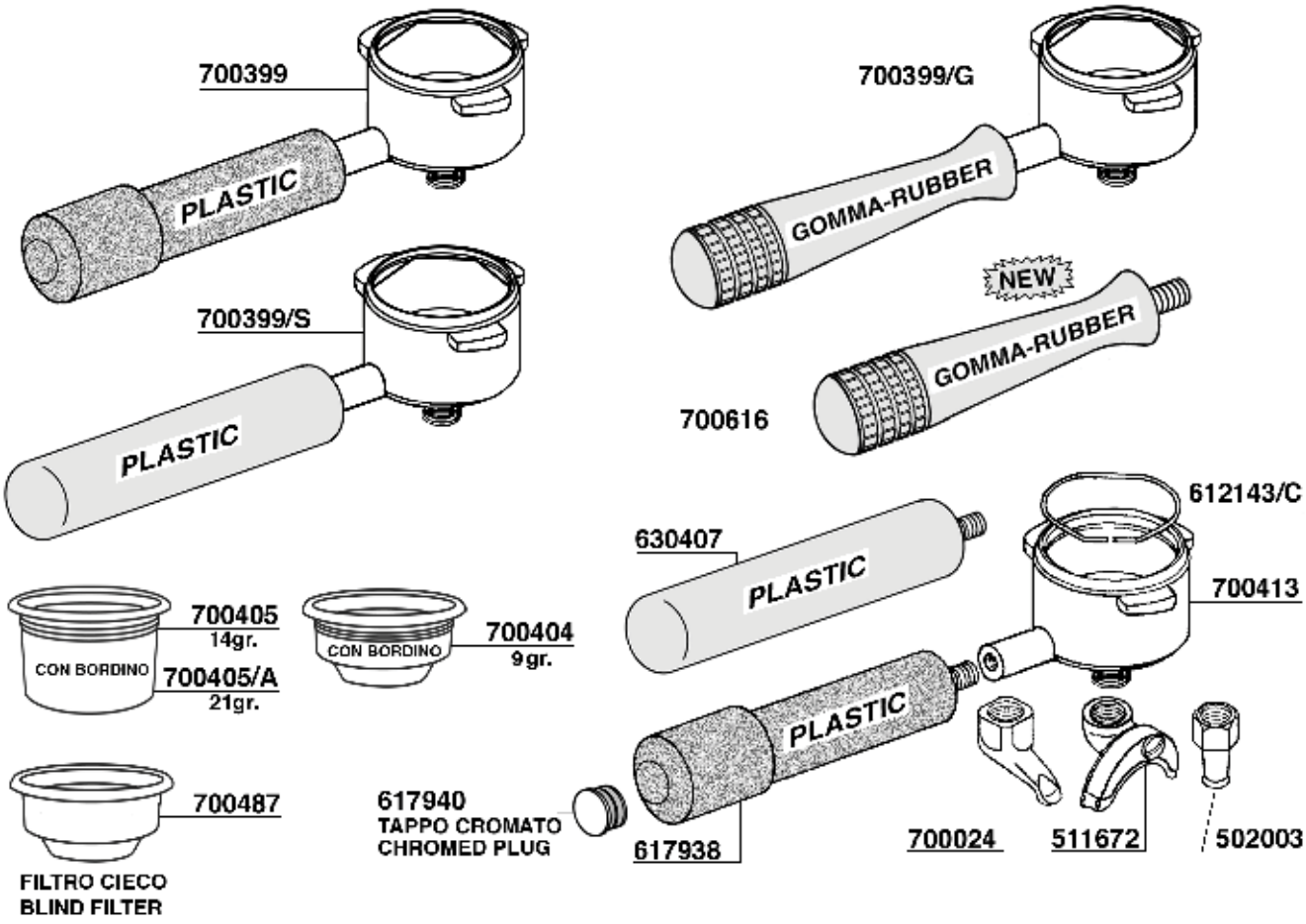



630411
SUPPORTO DISPLAY+THE'
TEA DISPLAY COVER

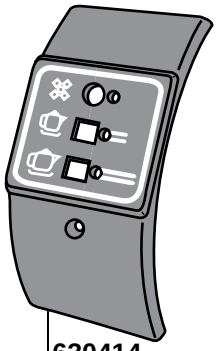

630414
SUPPORTO DOSATURA
DOSING DISPLAY

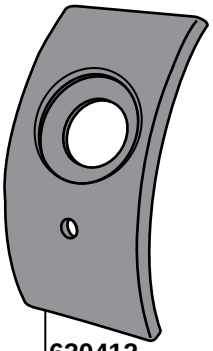

630412
MASCHERA RUBINETTO
VAPORE-ACQUA
WATER-STEAM TAP COVER

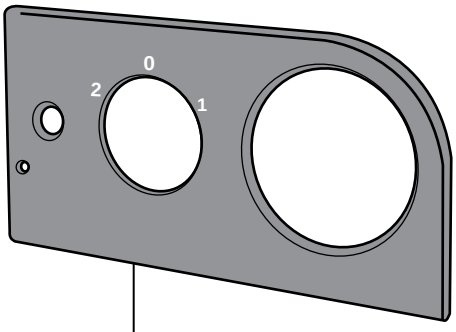

630413
MASCHERA INTERRUTTORE-
MANOPOLA GAS
SWITCH-GAS DIAL COVER

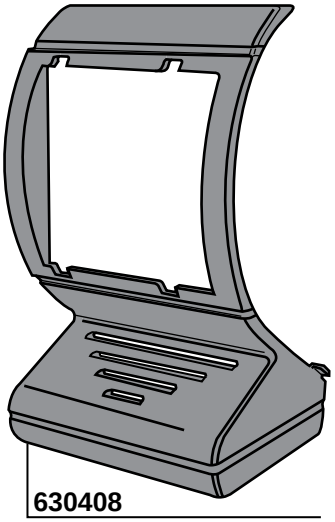

630408
MASCHERA GRUPPO T1 '95'
GROUP COVER T1 '95'

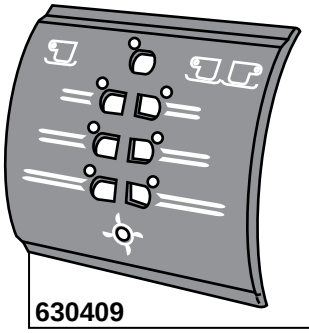

630409
SUPPORTO PULSANTI DOSI
DOSING BUTTONS SUPPORT

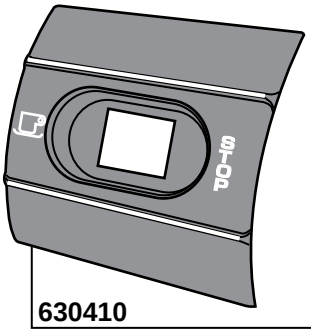

630410
SUPPORTO INTERRUTTORE ON-OFF
ON-OFF SWITCH SUPPORT

S5 ALL VERSION - S2 ALL VERSION - S8 ALL VERSION - S9 ALL VERSION
S40 SELETRON - S40 SUPREMA

202

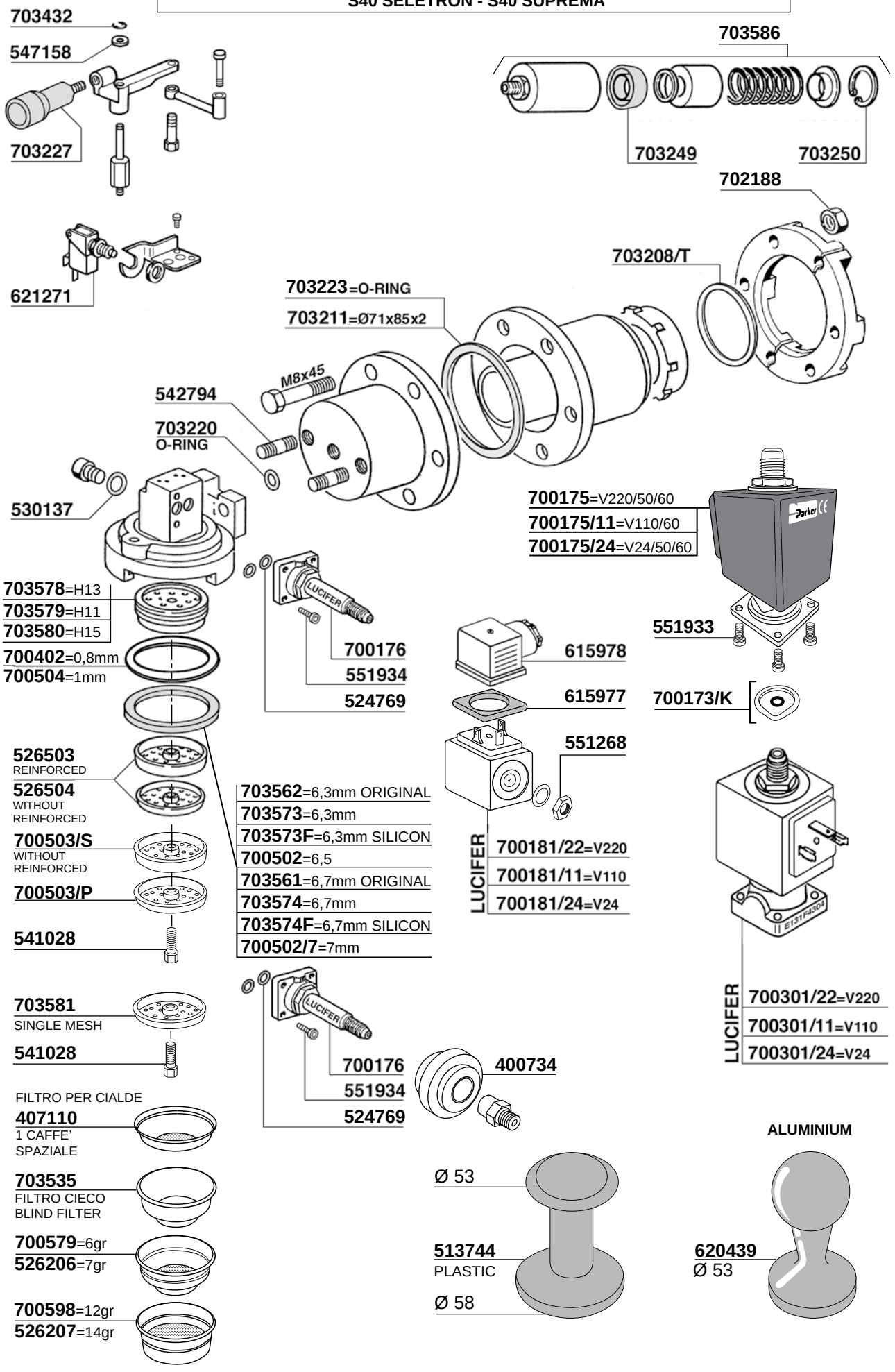

NEW3000 - NEW EC

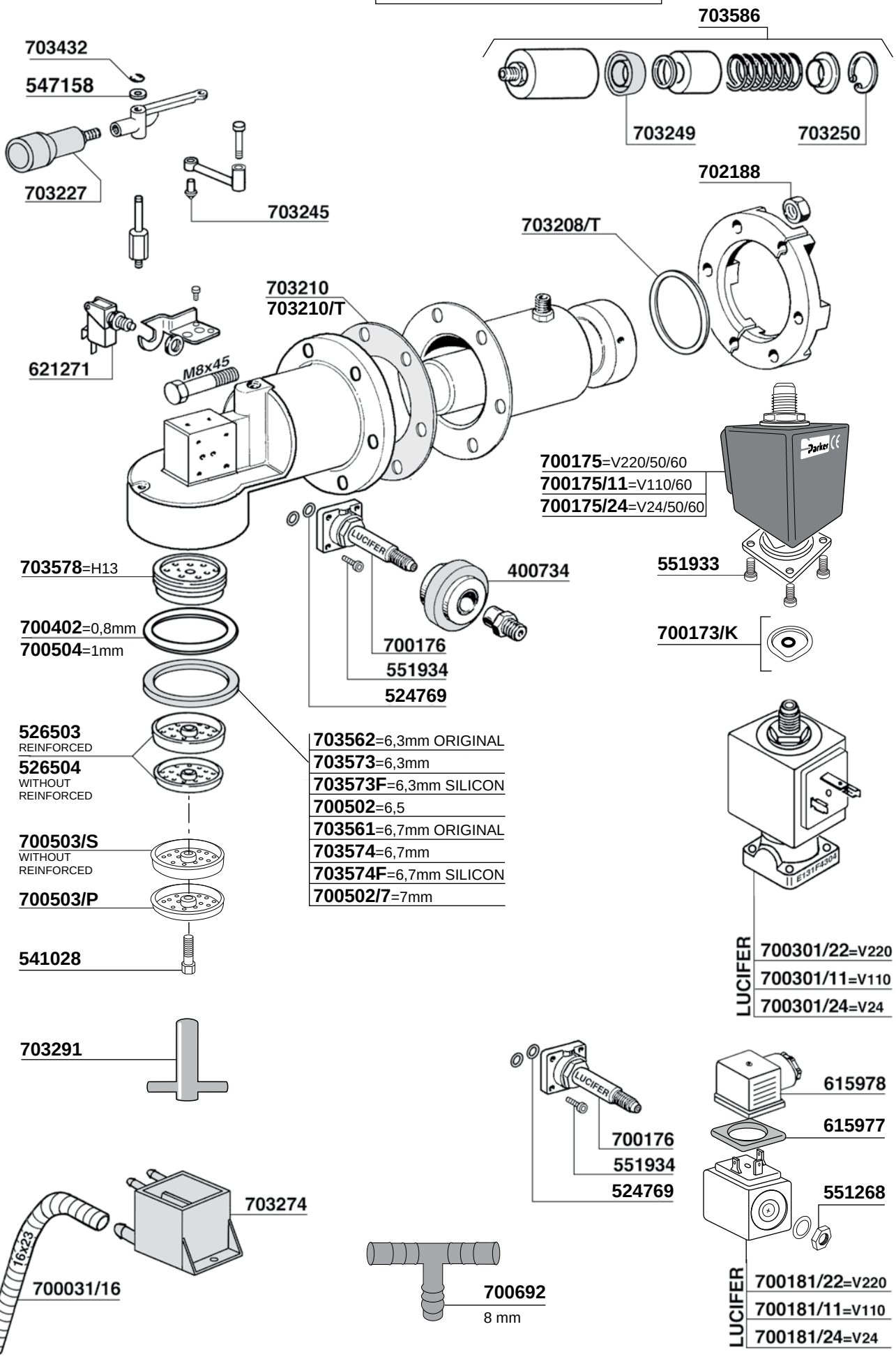

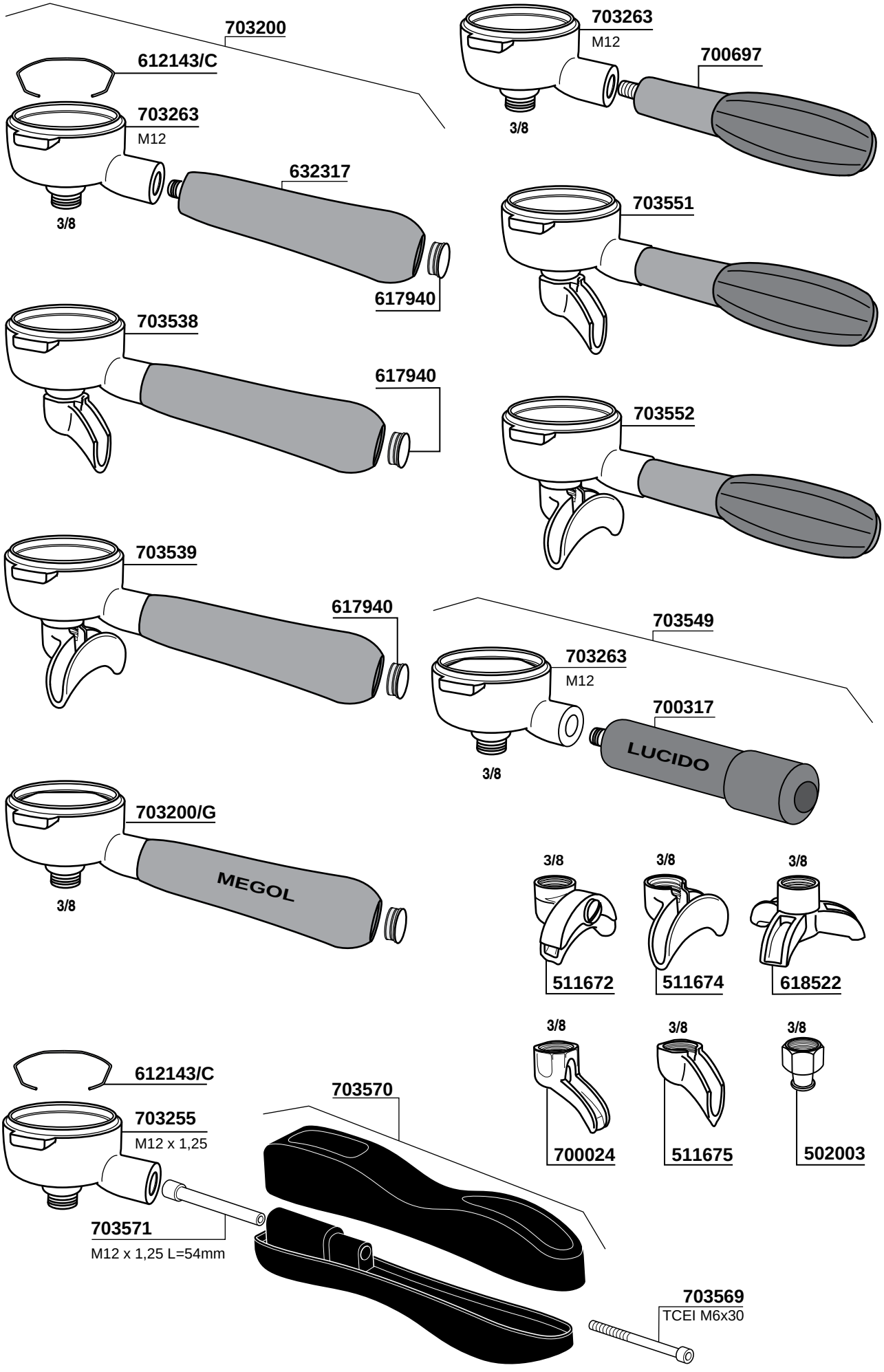
703200
612143/C
703263
M12
3/8
632317
617940
703263
M12
700697
3/8
703551
703538
617940
703552
703539
617940
703549
703263
M12
700317
LUCIDO
3/8
703200/G
MEGOL
3/8
3/8
511672
3/8
511674
3/8
618522
3/8
700024
3/8
511675
3/8
502003
612143/C
703255
M12 x 1,25
703570
703571
M12 x 1,25 L=54mm
703569
TCEI M6x30

NEW - SUPER 300 - RAPID - SPAZIO - SPAZIO SPECIAL

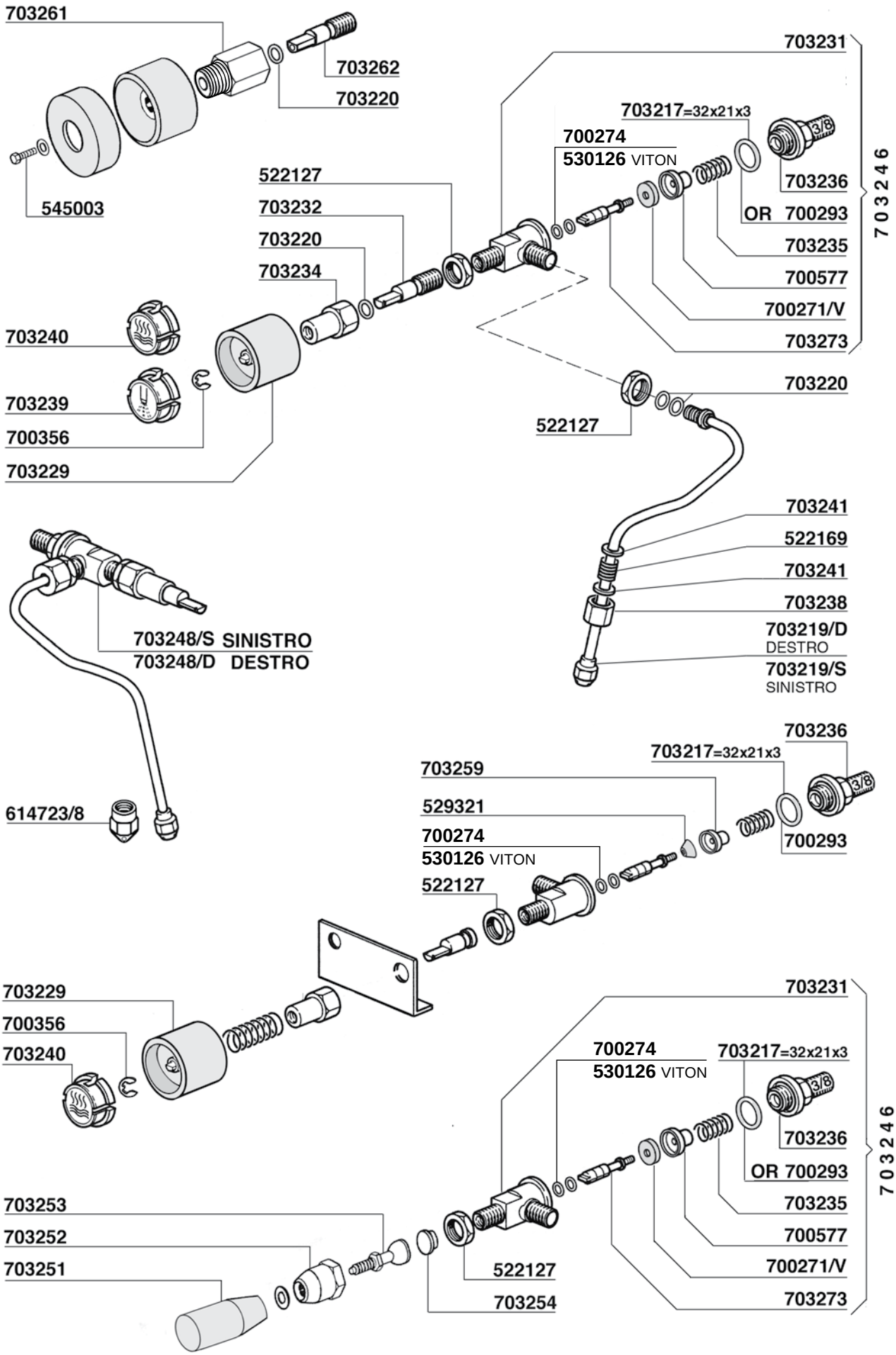

LA SPAZIALE

206

S1 - ARMONIA - S2 - ROSSINI - VIVALDI

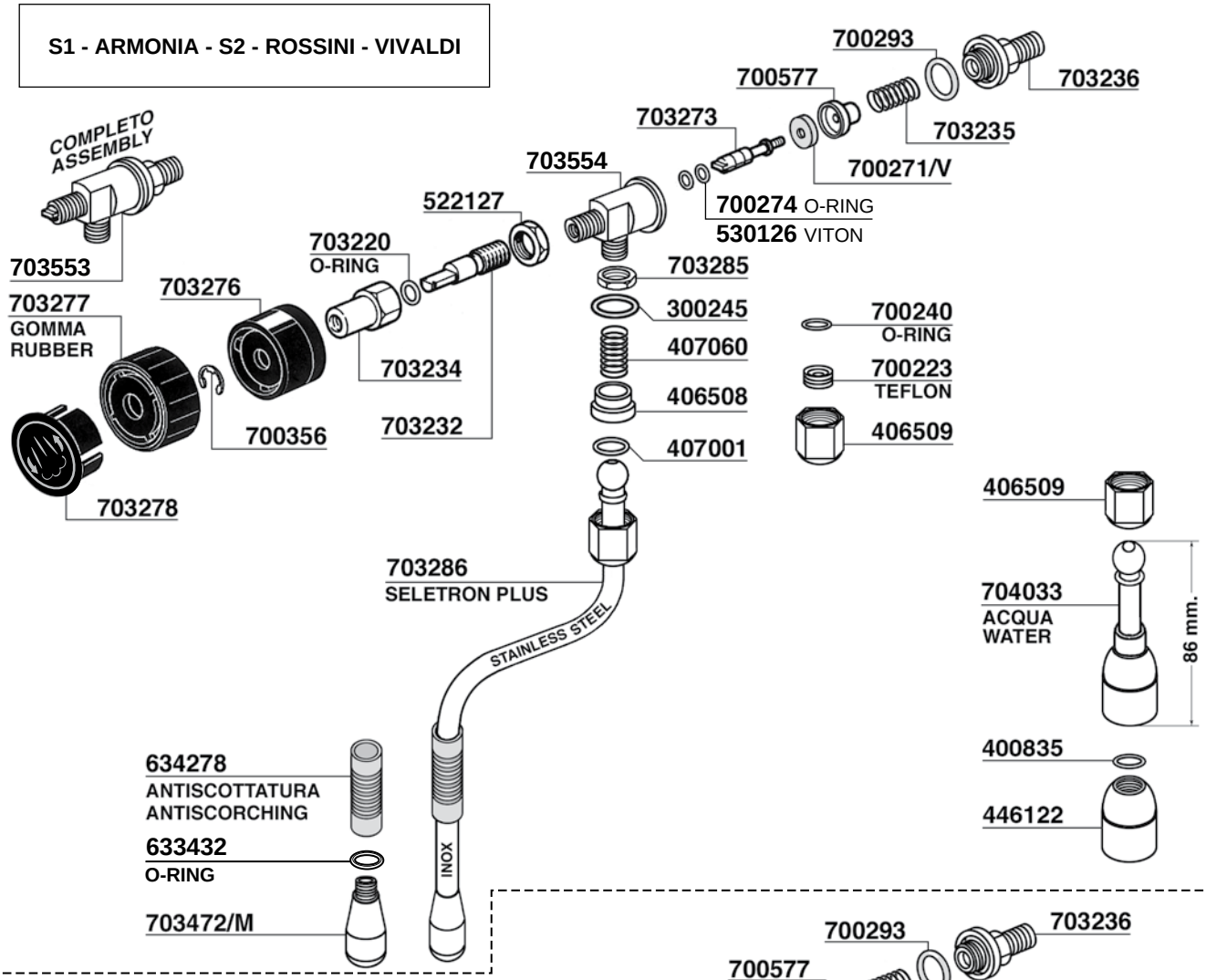

S8 - S3

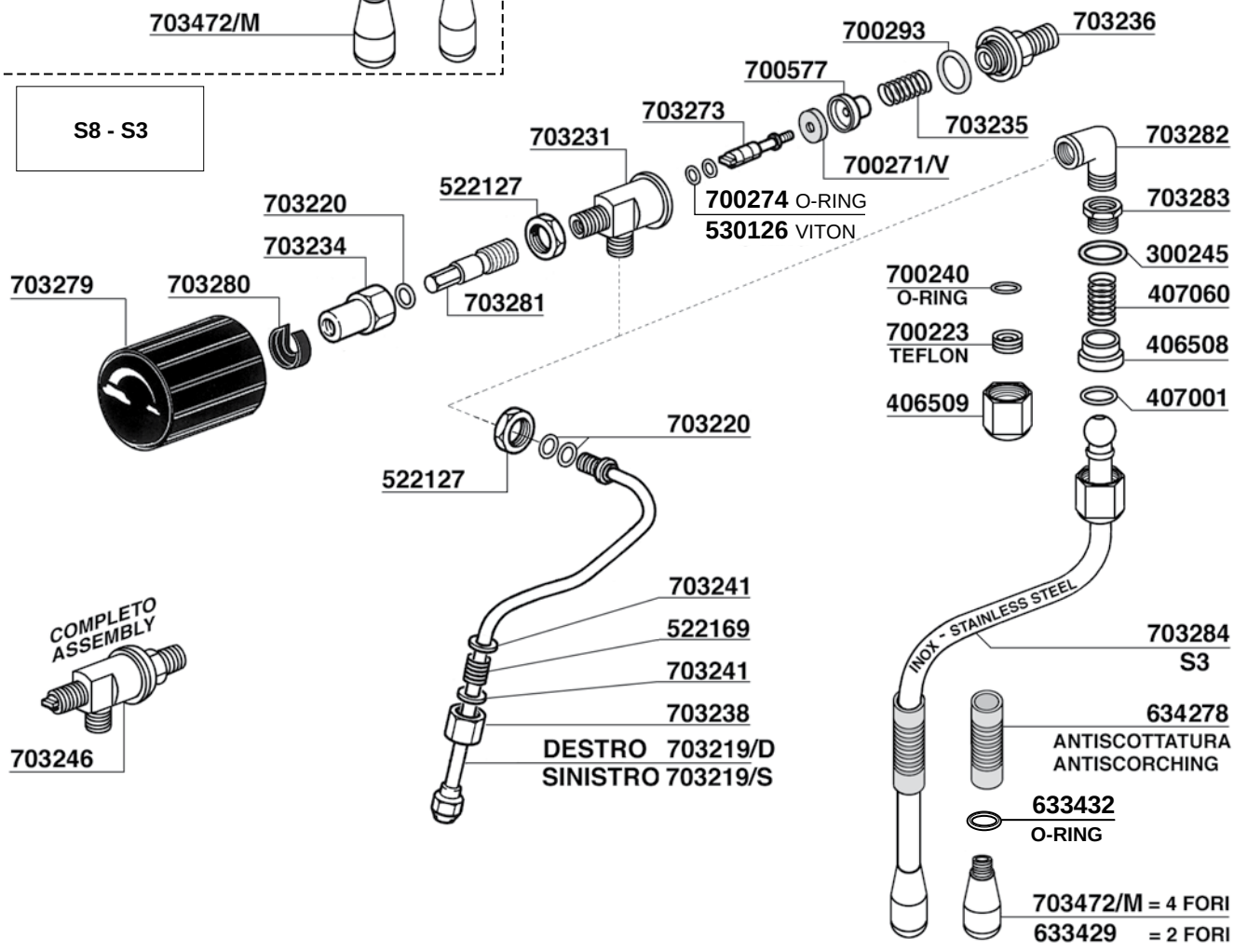

S1 MINI - VIVALDI

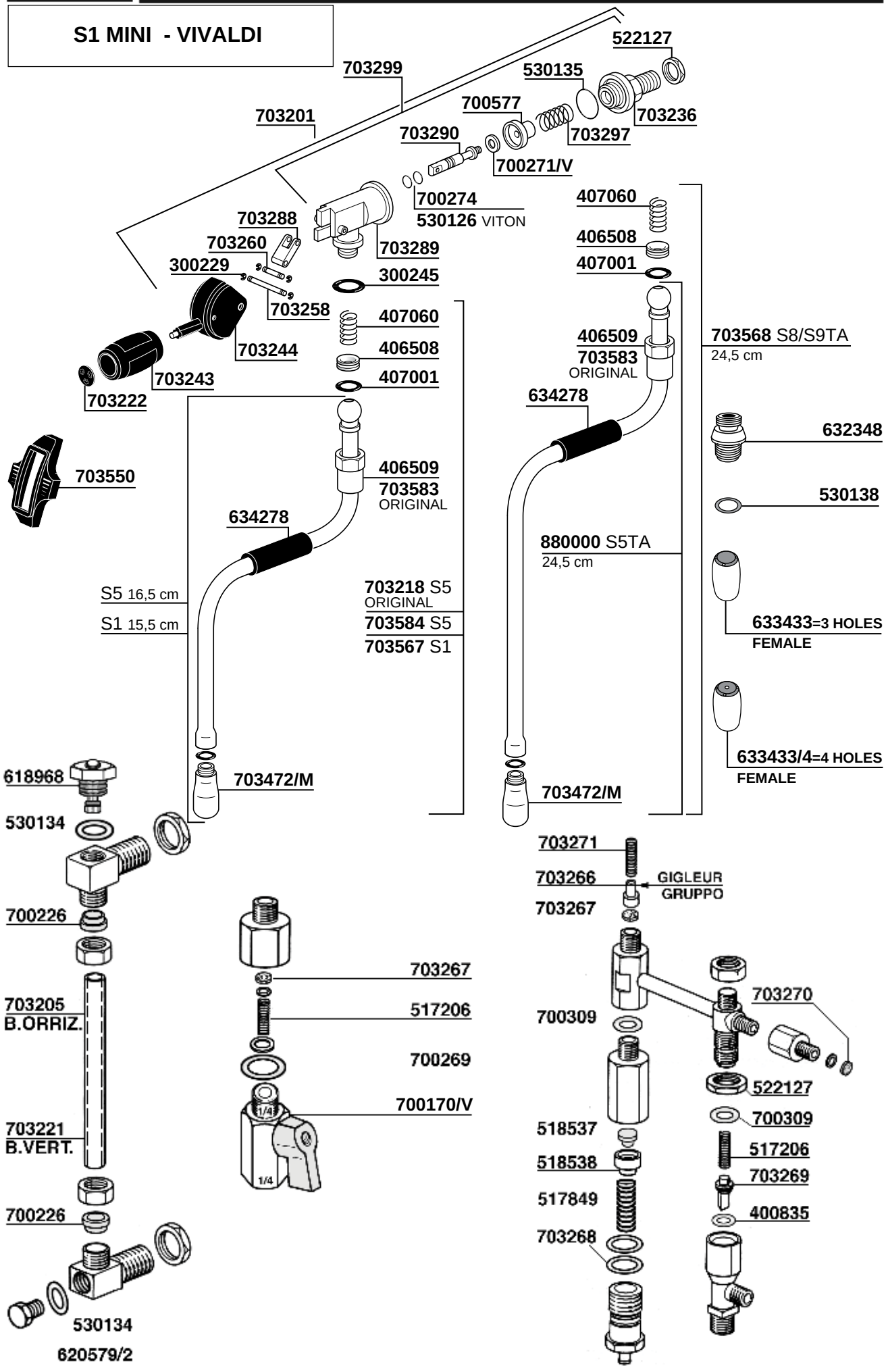

LA SPAZIALE

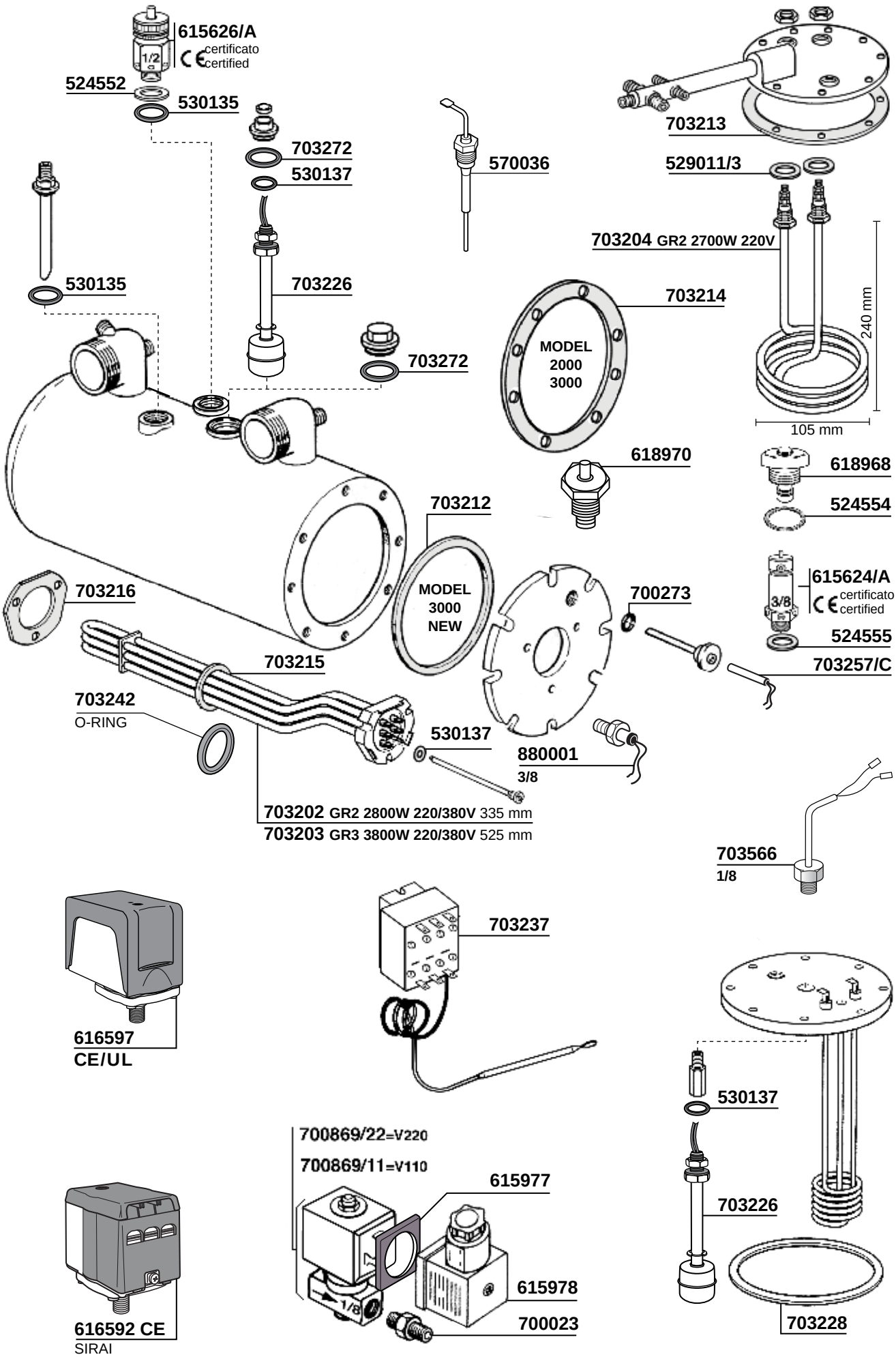
615626/A
certificato
certified
524552
530135
703272
530137
570036
703213
529011/3
703204 GR2 2700W 220V
240 mm
105 mm
530135
703226
703214
MODEL
2000
3000
703272
618970
618968
524554
703212
MODEL
3000
NEW
703216
700273
615624/A
certificato
certified
524555
703257/C
703215
703242
O-RING
530137
880001
3/8
703202 GR2 2800W 220/380V 335 mm
703203 GR3 3800W 220/380V 525 mm
703566
1/8
703237
616597
CE/UL
530137
700869/22=V220
700869/11=V110
615977
703226
615978
700023
703228
616592 CE
SIRAI

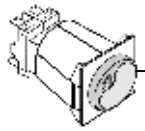

630381
NEW E.P.



634027
3000 ELEKTRIC



703275
S3 E.P.

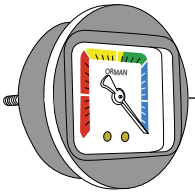

703265

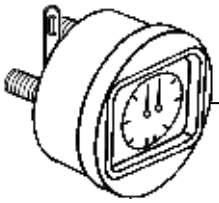

703264



703582
ORIGINAL

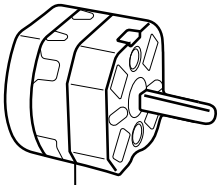

703247
20A 0-1

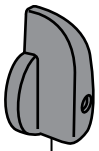

613656

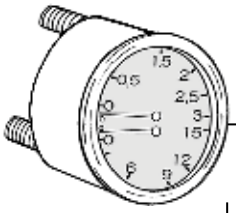

700411

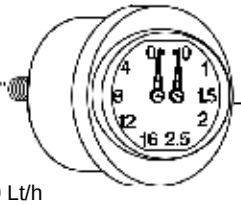

700315

620406 150 Lt/h
620406/X 150 Lt/h
INOX-STAINLESS STEEL
620406/2 200 Lt/h

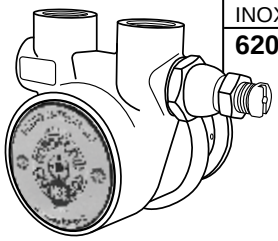

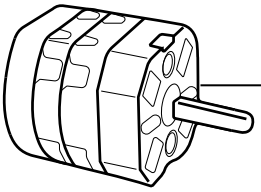

703588
20A 0-1

700047 50 Lt/h
MINIPOMPA

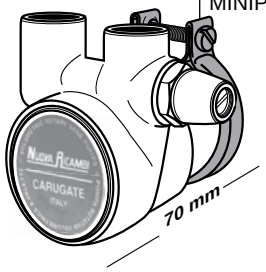

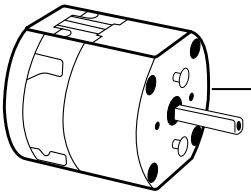

703589
32A 0-1

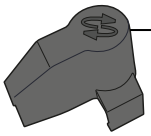

617902



703560

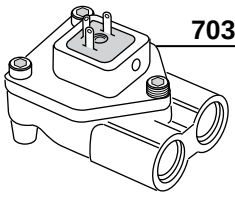

703559

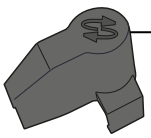

617902

621347=10µF
702311=16µF

700154/22=V220/50 W165 HP0,2
170x165x185 mm
700085/22=V220/50/60 W330 HP0,5 UL USA
225x175x180 mm
700085/11=V110/60 W330 HP0,5 UL USA
225x175x180 mm

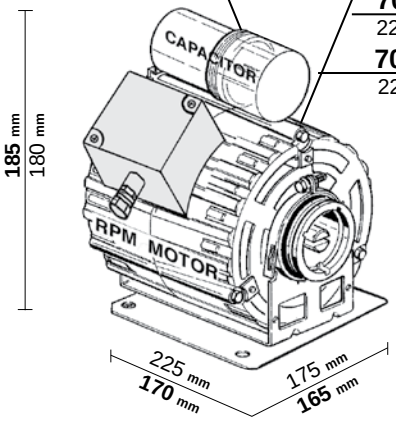

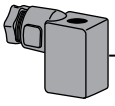

615978/T



615979

620405

703271

703267

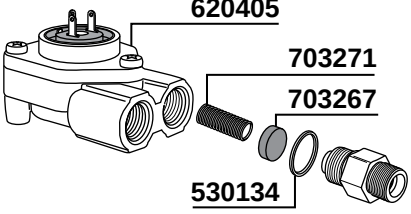

530134

617160/22 ULKA EX5-220V 50/60Hz 48W
617160/11 ULKA EX5-120V 60Hz 41W

617162

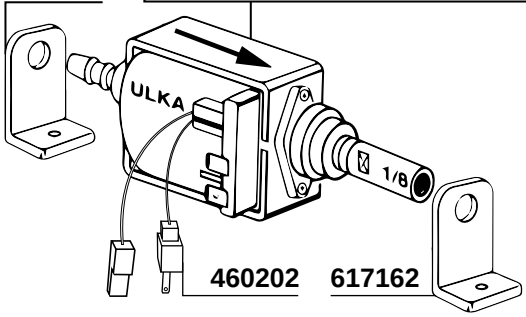

460202

617162



703540
S3



703292
NEW EK

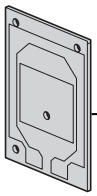

703541
S3

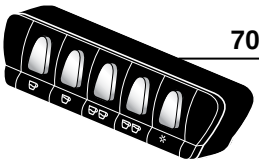

703543
S5



703576
S2 EK

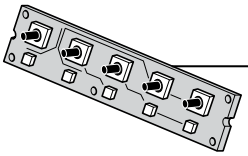

703545
S5

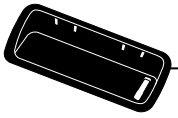

703577
S5

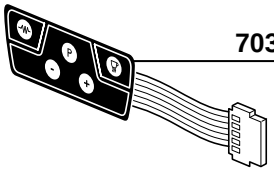

703544
S5

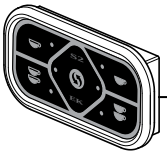

703548
S2 EK



703546
S3 EK 2/3 GR

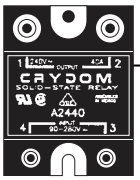

703296



703587
S2 EP

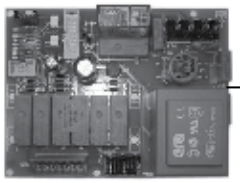

703547
S3 Seletron

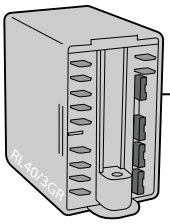

703575
S2-3GR 230V



703556
S8-S9

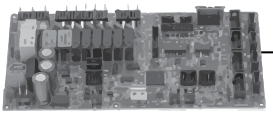

703585
UNIVERSAL

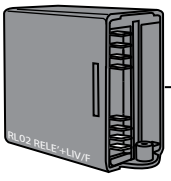

703287
NEW 300



703555
S8 - S9



703563
VIVALDI

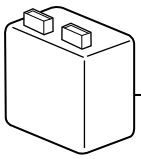

703293
1-2 GR 110V
NEW EK GR

703294
1-2 GR 230V
NEW EK GR

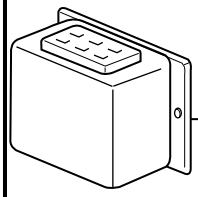

703295
3-4 GR 230V
NEW EK



703542
S5-S8-S9 Compact
S2 Special 2 GR



703557
S5-S8-S9
VERSIONE
COMPAK

NUOVA SIMONELLI

AURELIA II S. - V - DIGIT

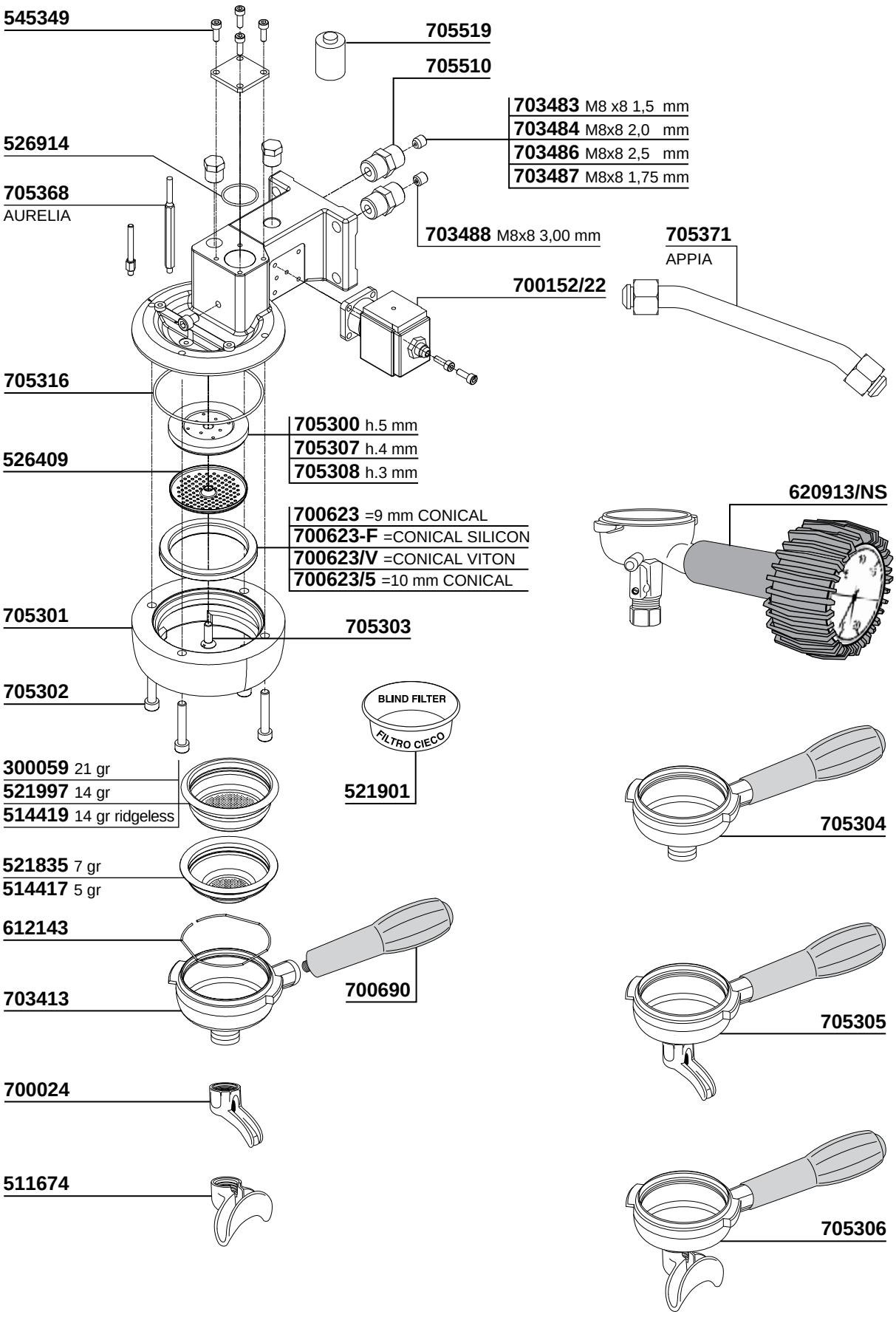

212

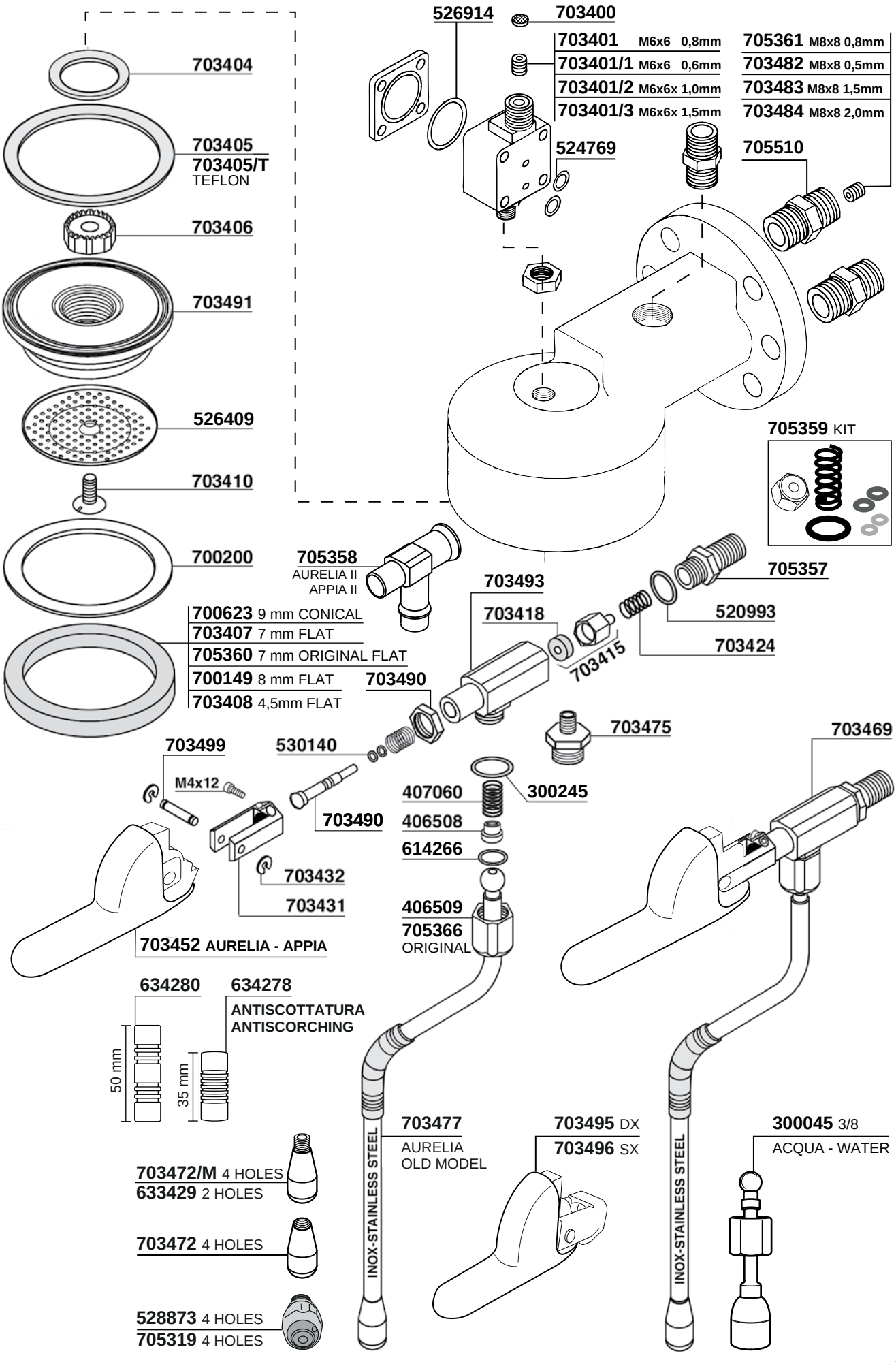
703404
703405
703405/T TEFLON
703406
703491
526409
703410
700200
700623 9 mm CONICAL
703407 7 mm FLAT
705360 7 mm ORIGINAL FLAT
700149 8 mm FLAT
703408 4,5mm FLAT
526914
703400
703401 M6x6 0,8mm
703401/1 M6x6 0,6mm
703401/2 M6x6x 1,0mm
703401/3 M6x6x 1,5mm
705361 M8x8 0,8mm
703482 M8x8 0,5mm
703483 M8x8 1,5mm
703484 M8x8 2,0mm
524769
705510
705359 KIT
705358
AURELIA II
APPIA II
703493
703418
703415
705357
520993
703424
703490
703499
530140
M4x12
703490
703432
703431
703452 AURELIA - APPIA
703475
703469
407060
300245
406508
614266
406509
705366
ORIGINAL
634280
634278
ANTISCOTTATURA
ANTISCORCHING
50 mm
35 mm
703472/M 4 HOLES
633429 2 HOLES
703472 4 HOLES
528873 4 HOLES
705319 4 HOLES
INOX-STAINLESS STEEL
703477
AURELIA
OLD MODEL
703495 DX
703496 SX
INOX-STAINLESS STEEL
300045 3/8
ACQUA - WATER

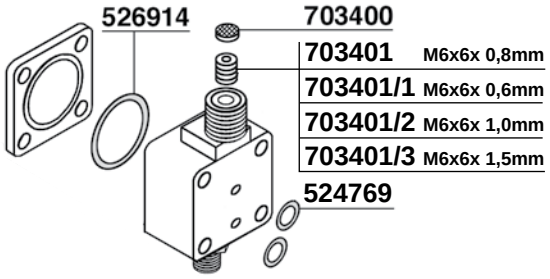

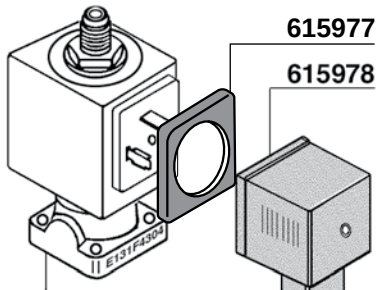

700301/22=V220 | 700152/22=V220
700301/11=V110 | 700152/11=V110
LUCIFER | PARKER

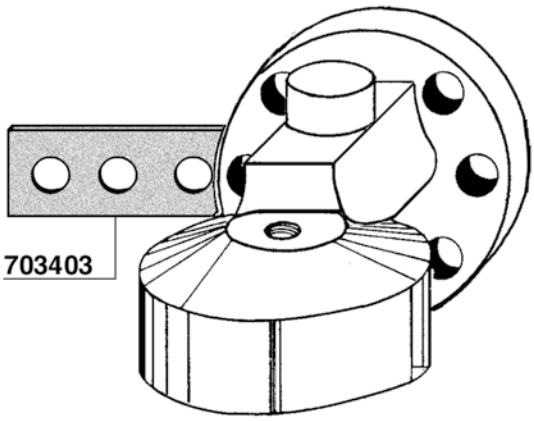

700176=LUCIFER
700177=PARKER

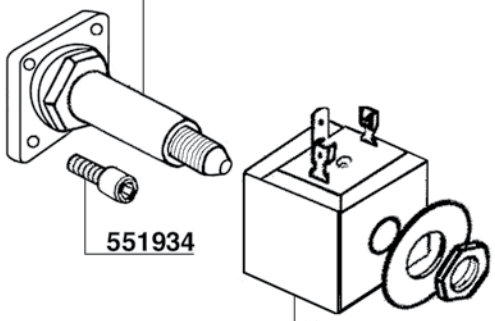

703404

703405
703405/T
TEFLON

703491

703406

700200
518609 VITON

700623 9 mm CONICAL
700623/V CONICAL VITON
700623/5 10 mm CONICAL
703407 7 mm
705360 7 mm ORIGINAL FLAT
703408 4,5 mm
700149 8 mm
703498 8,2 mm ORIGINAL CONICAL

526409

703410

526411

526412

521901

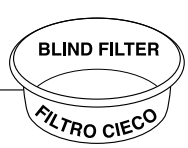

700181/22=V220
700181/11=V110
LUCIFER
700179/22=V220
700179/11=V110
PARKER

632316/M

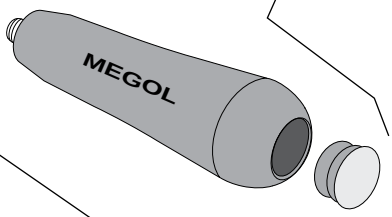

612143=ø1,1
612142=ø1,2

703413

703414

502003 511672 700024 632316 617940

214

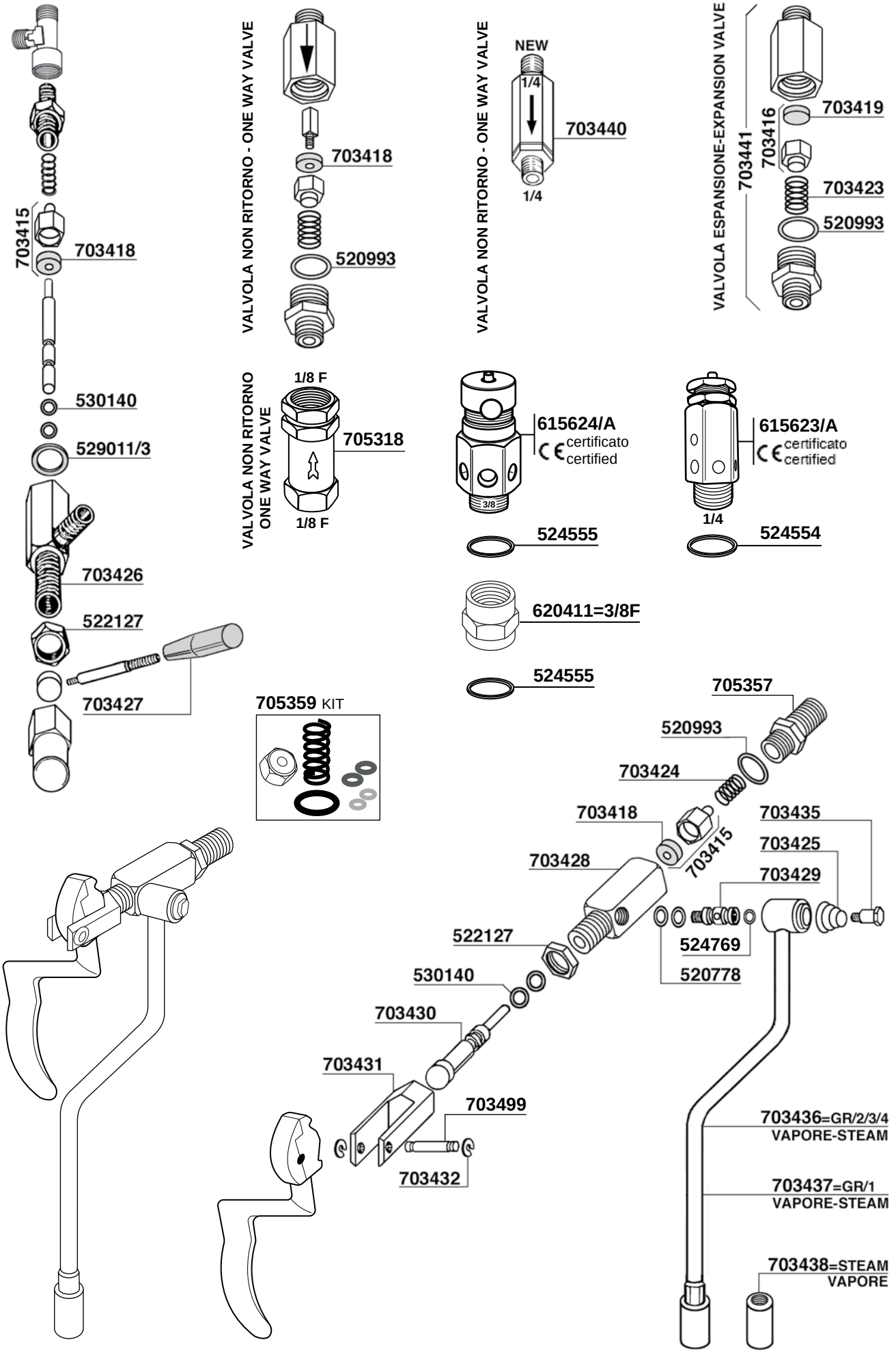
703415
703418
530140
529011/3
703426
522127
703427
VALVOLA NON RITORNO - ONE WAY VALVE
703418
520993
NEW
1/4
703440
1/4
VALVOLA NON RITORNO - ONE WAY VALVE
VALVOLA ESPANSIONE-EXPANSION VALVE
703441
703416
703419
703423
520993
VALVOLA NON RITORNO ONE WAY VALVE
1/8 F
705318
1/8 F
615624/A
certificato
certified
3/8
524555
620411=3/8F
524555
615623/A
certificato
certified
1/4
524554
705359 KIT
705357
520993
703424
703418
703415
703428
703435
703425
703429
524769
520778
522127
530140
703430
703431
703499
703432
703436=GR/2/3/4
VAPORE-STEAM
703437=GR/1
VAPORE-STEAM
703438=STEAM
VAPORE

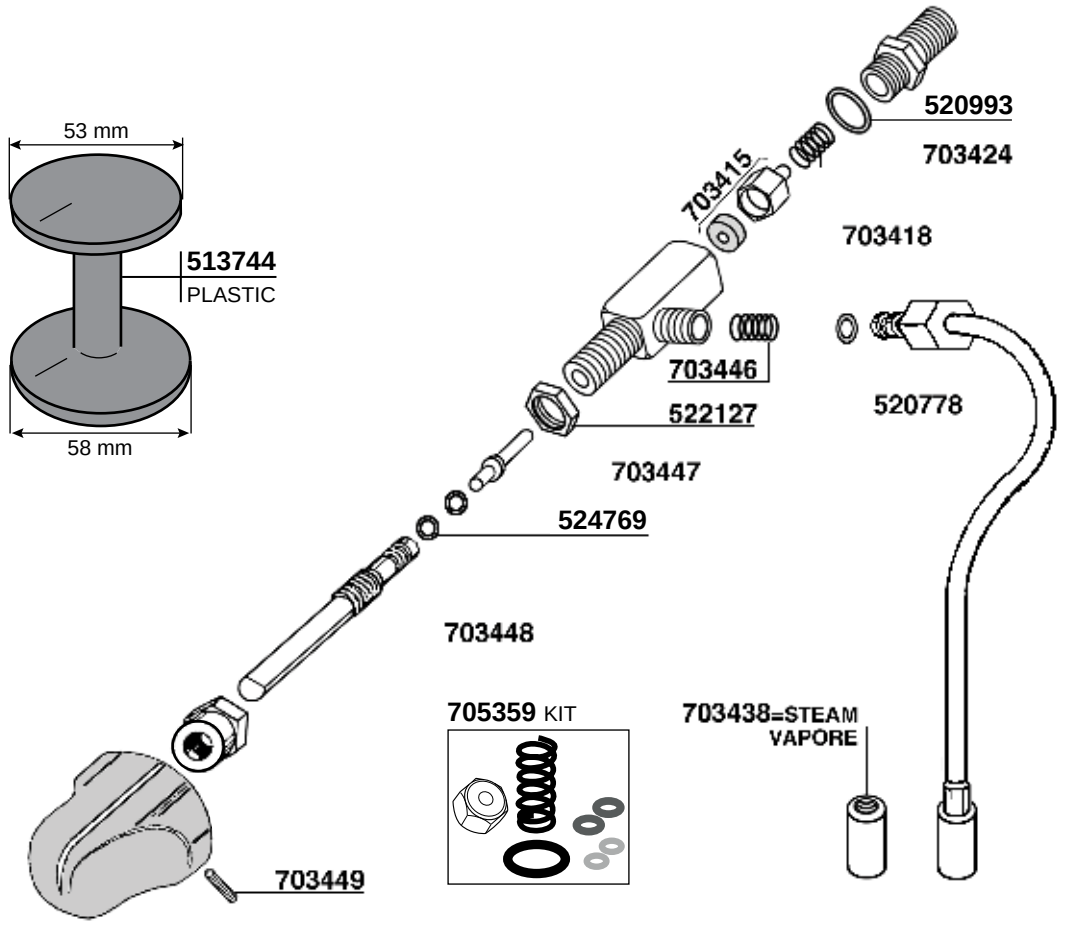
53 mm
513744
PLASTIC
58 mm
520993
703424
703415
703418
703446
522127
520778
703447
524769
703448
705359 KIT
703438=STEAM
VAPORE
703449

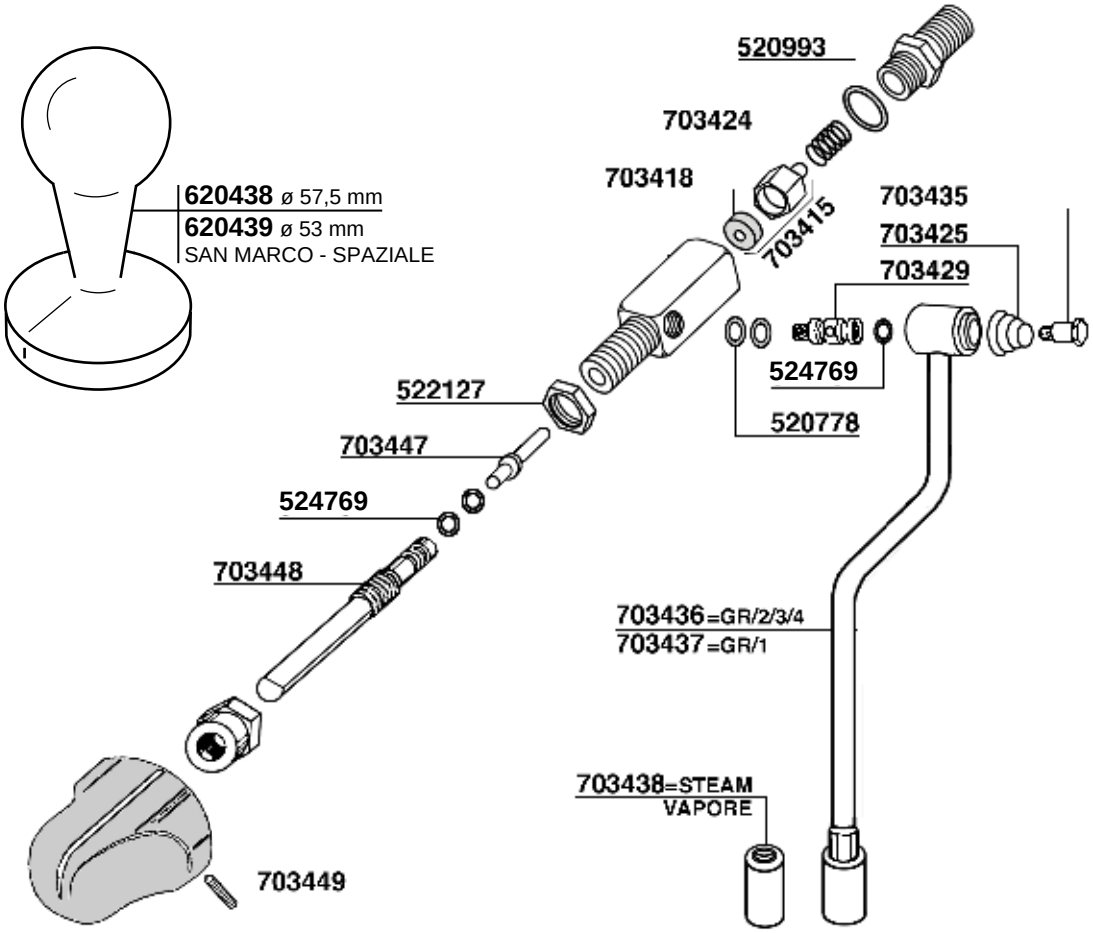
620438 ø 57,5 mm
620439 ø 53 mm
SAN MARCO - SPAZIALE
520993
703424
703418
703415
703435
703425
703429
524769
520778
522127
703447
524769
703448
703436=GR/2/3/4
703437=GR/1
703438=STEAM
VAPORE
703449

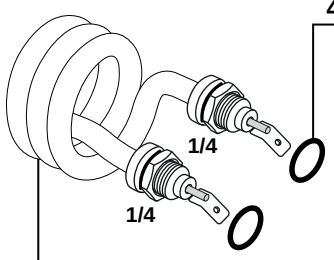

400836

400625 1200W 220V Ø55 mm.68

400626 1200W 110V Ø55 mm.68

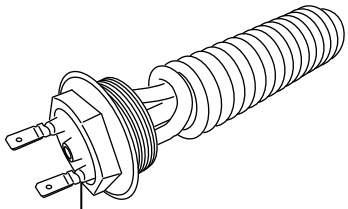

703497 1"1/4
2600W 230V mm.160

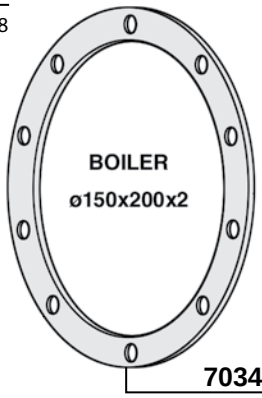

703476

703456/T

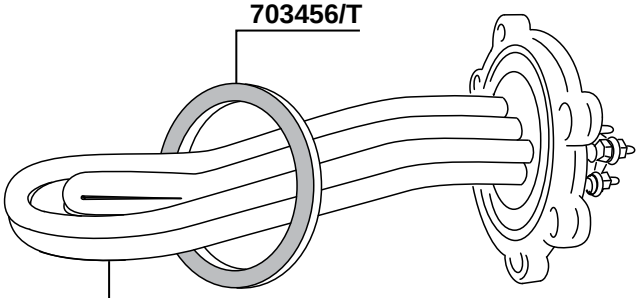

703457/22	=GR1 1800W 230V	mm.150
703457/11	=GR1 1500W 115V	mm.155
703467	=GR2 PREMIER 2700W 220/400V	mm.175
703458	=GR2 3000W 220/400V	mm.340
703478	=GR2 4500W 220/400V	mm.340
703459	=GR3/4 5000W 220/400V	mm.570

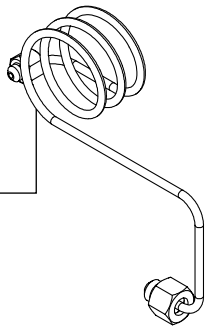

705367

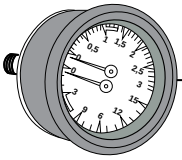

700411

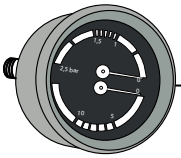

700874

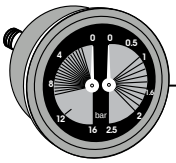

460050



618968

524554



700750/V

524554

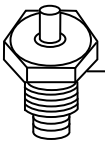

618970

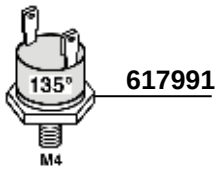

617991

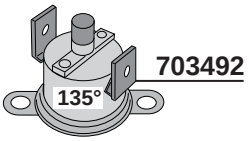

703492

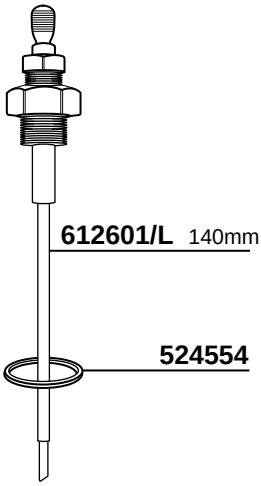

612601/L 140mm

524554

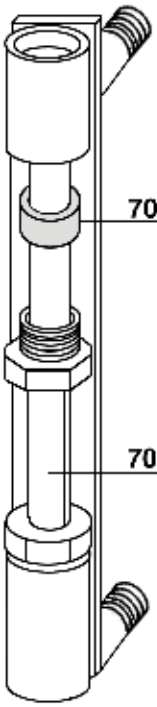

703464

703463

522127

705309

530134

703462

530134

705516

621347
CAPACITOR CONDENSAT. 10 µF

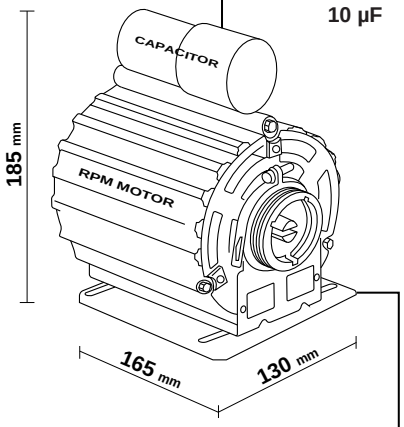

700084/22
V220/50/60 W165 HP0,2 WITH CABLE

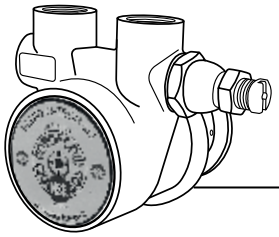

620406 150 Lt/h INOX-STAINLESS STEEL
620406/2 200 Lt/h

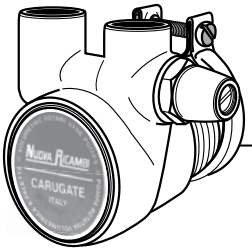

700055 100 Lt/h
700055/2 200 Lt/h
700048/X 100 Lt/h
INOX-STAINLESS STEEL

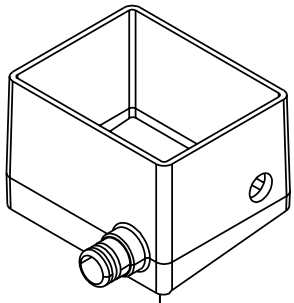

705321

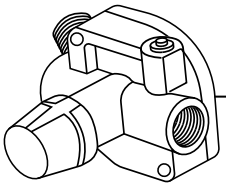

700464

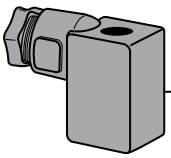

615978/T

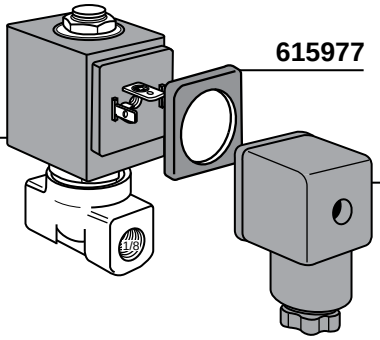

615977
632017/22=V220
632017/11=V110
615978



615979



530148

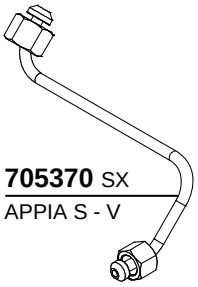

705370 SX
APPIA S - V

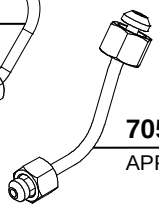

705369 DX
APPIA S - V

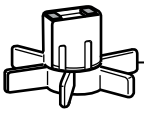

617903

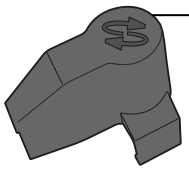

617902

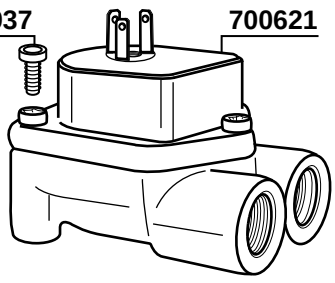

551937 **700621**

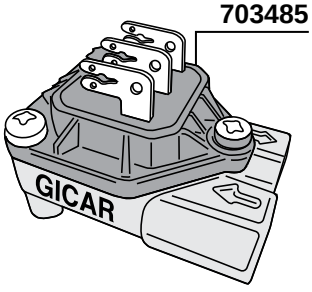

703485

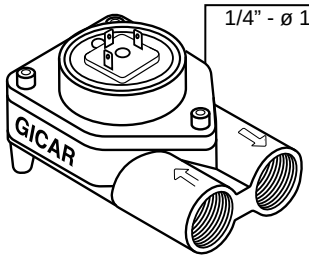

703480
1/4" - ø 1,2"

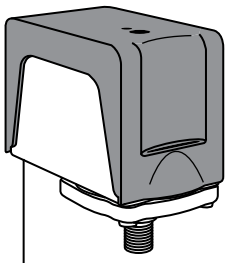

616597 CE/UL

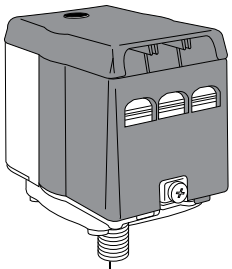

616592

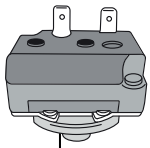

616589
CAMPINI TY85-B
1,4 BAR

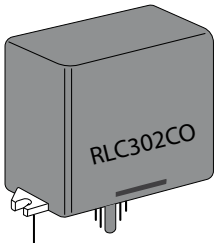

705313=V230



705320
OSCAR RL30/2S/3R 230V
GICAR CODE 9.1.40.61G

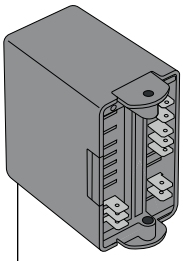

703494/11OSCAR
GICAR CODE 9.1.40.62G

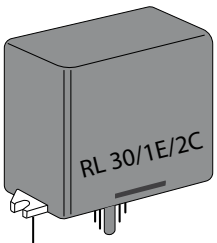

703468=V220
GICAR CODE 9.1.00.10G
703468/11=V110
GICAR CODE 9.1.00.19G

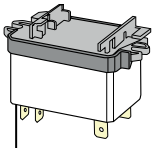

705322

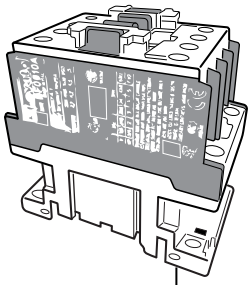

705314

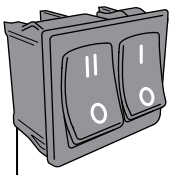

705312

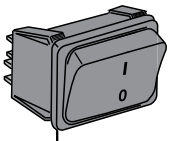

703453

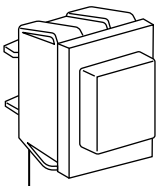

700180

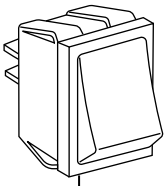

700429

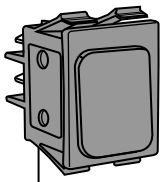

618014
RED LIGHT

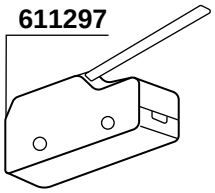

611297

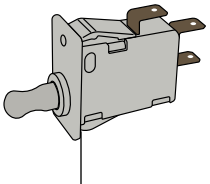

410151
3 POSIZIONI

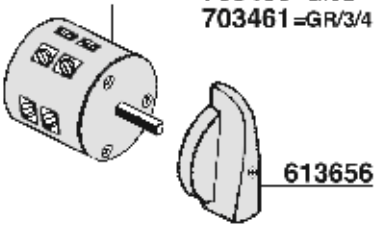

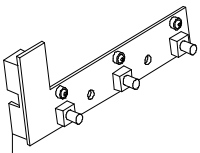

705323
APPIA 2/3 GR

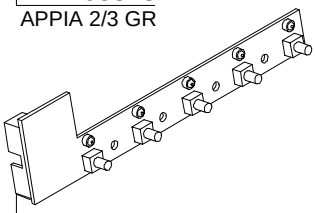

705324
APPIA 2/3 GR

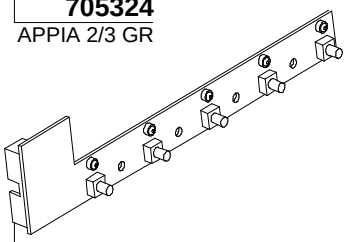

705325
APPIA 1 GR

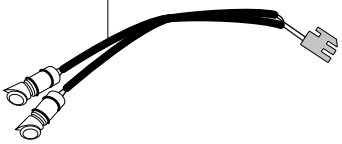

705362
ADONIS

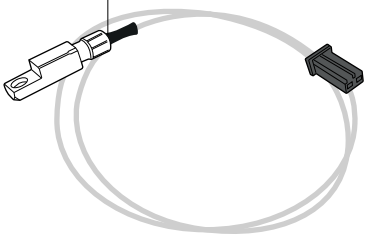

705363
AURELIA II T3

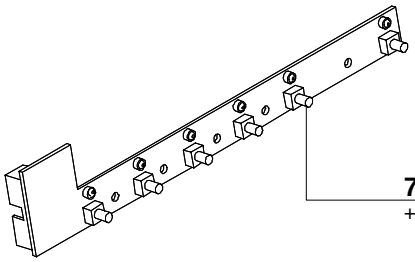

705326 APPIA 2GR
+ ACQUA CALDA

705327
APPIA 1 GR

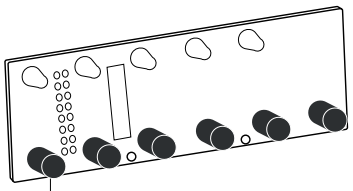

705335
PROGRAM VIP/PREMIER V

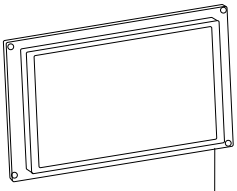

705342
DISPLAY LCD
GRAFICO 1GR
GICAR CODE 8.8.15.61G

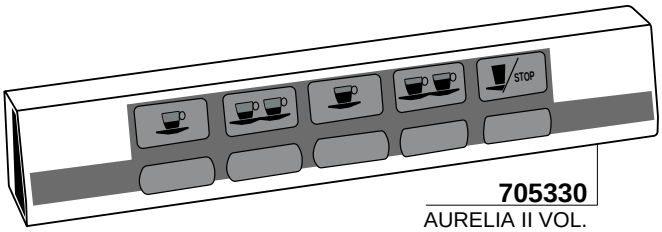

705330
AURELIA II VOL.

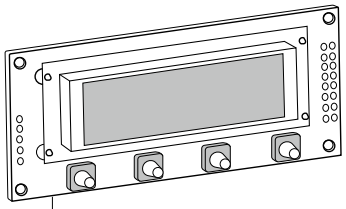

705343 AURELIA BLUE DISPLAY
705344 ADONIS WHITE DISPLAY

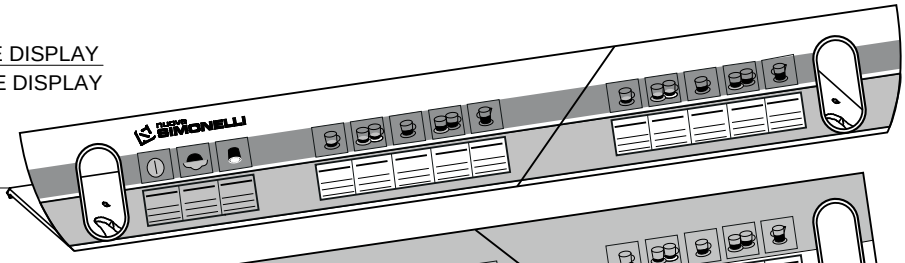

705364 APPIA II
2GR

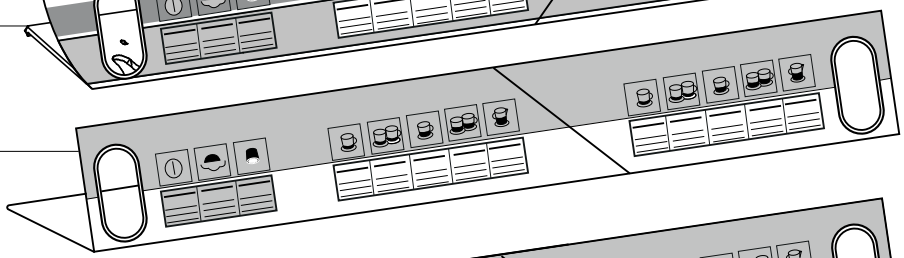

705328 APPIA
2GR

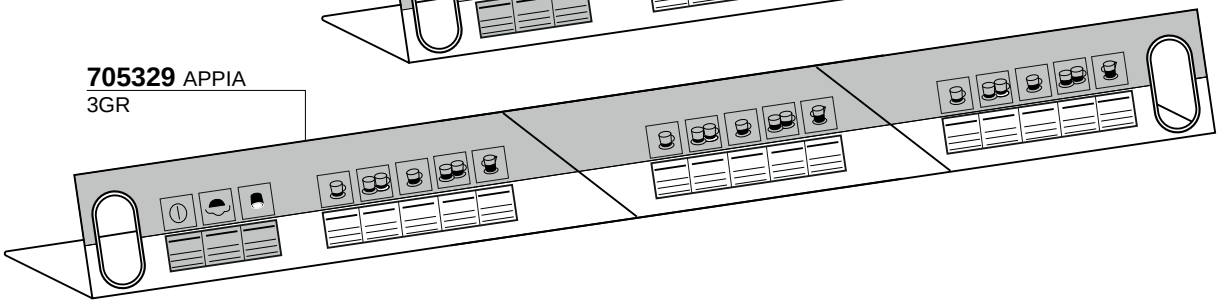

705329 APPIA
3GR

220

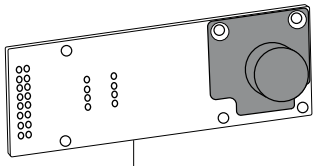

705331
G/S

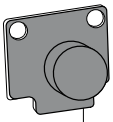

705341
G/S AURELIA

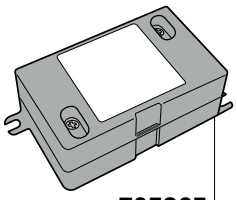

705365
DC 8W

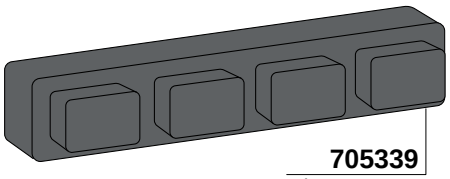

705339
G/S AURELIA

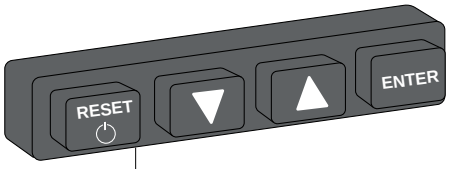

705338
G/S AURELIA

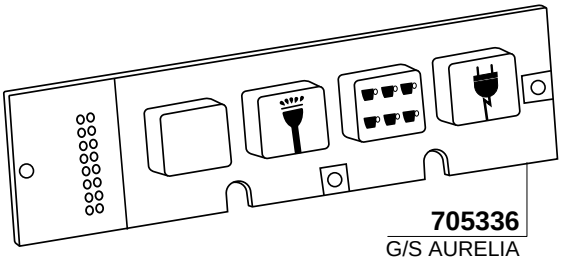

705336
G/S AURELIA

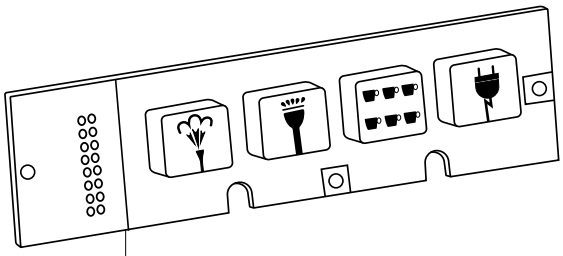

705340
G/S AURELIA

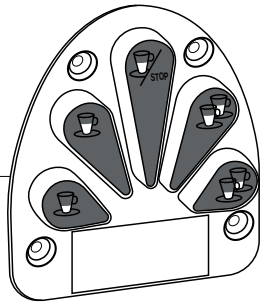

705345
ADONIS

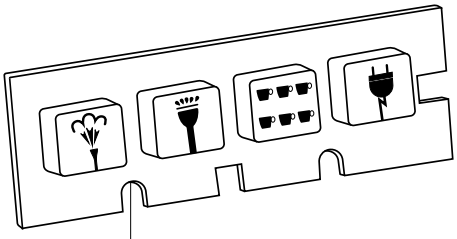

705337
G/S AURELIA

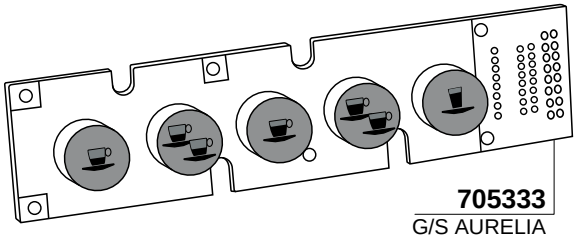

705333
G/S AURELIA

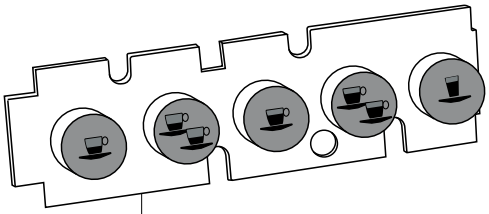

705334
G/S AURELIA

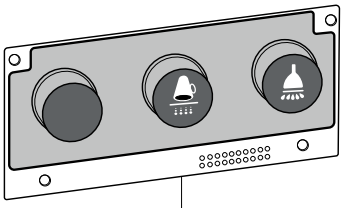

705332
ADONIS

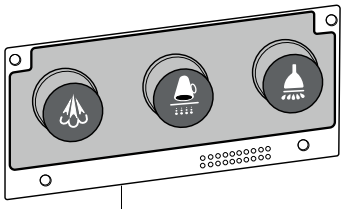

705346
ADONIS

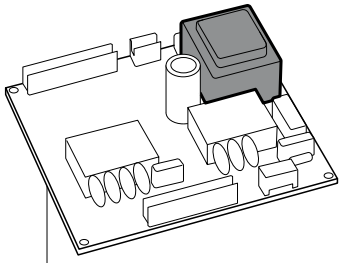

705347
AURELIA VIP 2GR

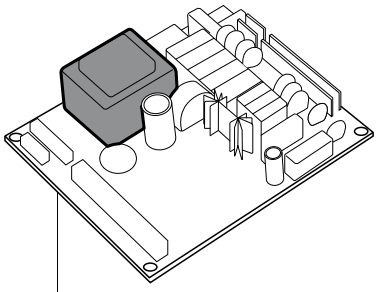

705348
AURELIA PLUS 3/4GR

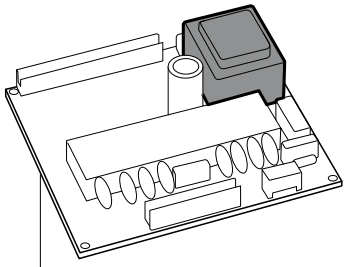

705350 AURELIA V 3/4GR
705311 AURELIA II "V" 3/4GR

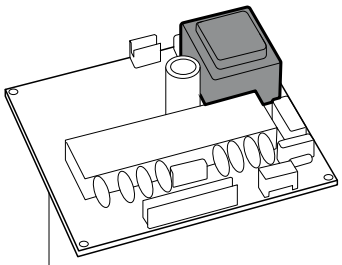

705351 AURELIA S 3/4GR
705310 AURELIA II "S" 3/4GR

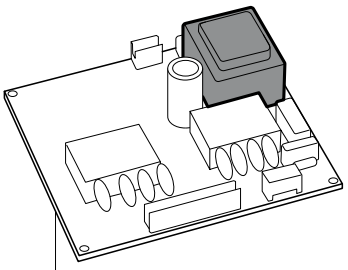

705352
AURELIA S 2GR

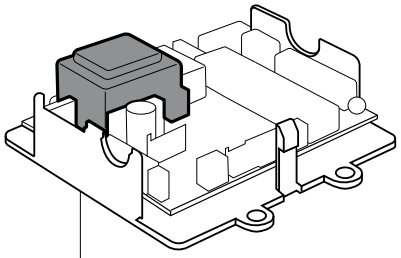

705353
AURELIA II/COMPACT
1/2/3 GR 230V

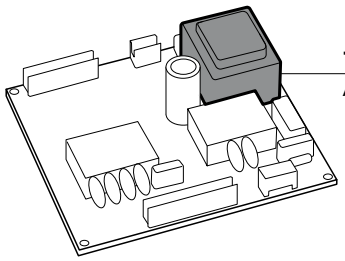

705356
AURELIA II V 2GR

705317
2GR APPIA-APPIA II
VOLUMETRIC 230V

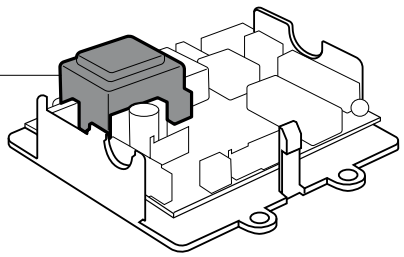

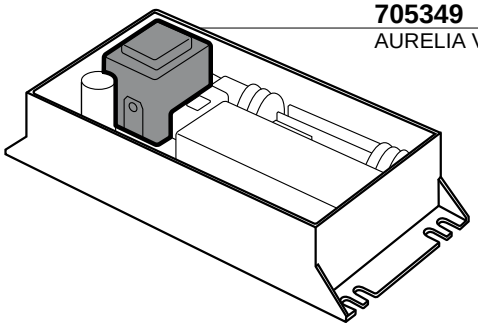

705349
AURELIA V 2GR

705315
2GR APPIA COMP.
APPIA II COMP. 230V

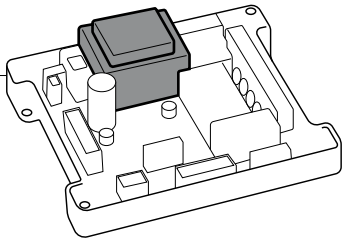

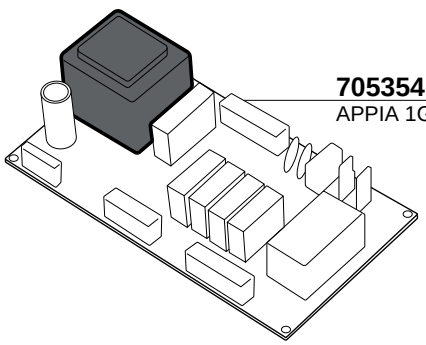

705354
APPIA 1GR 230V 50/60 Hz

705355
MUSICA 230V

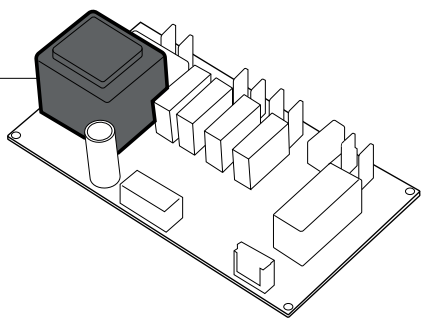

222

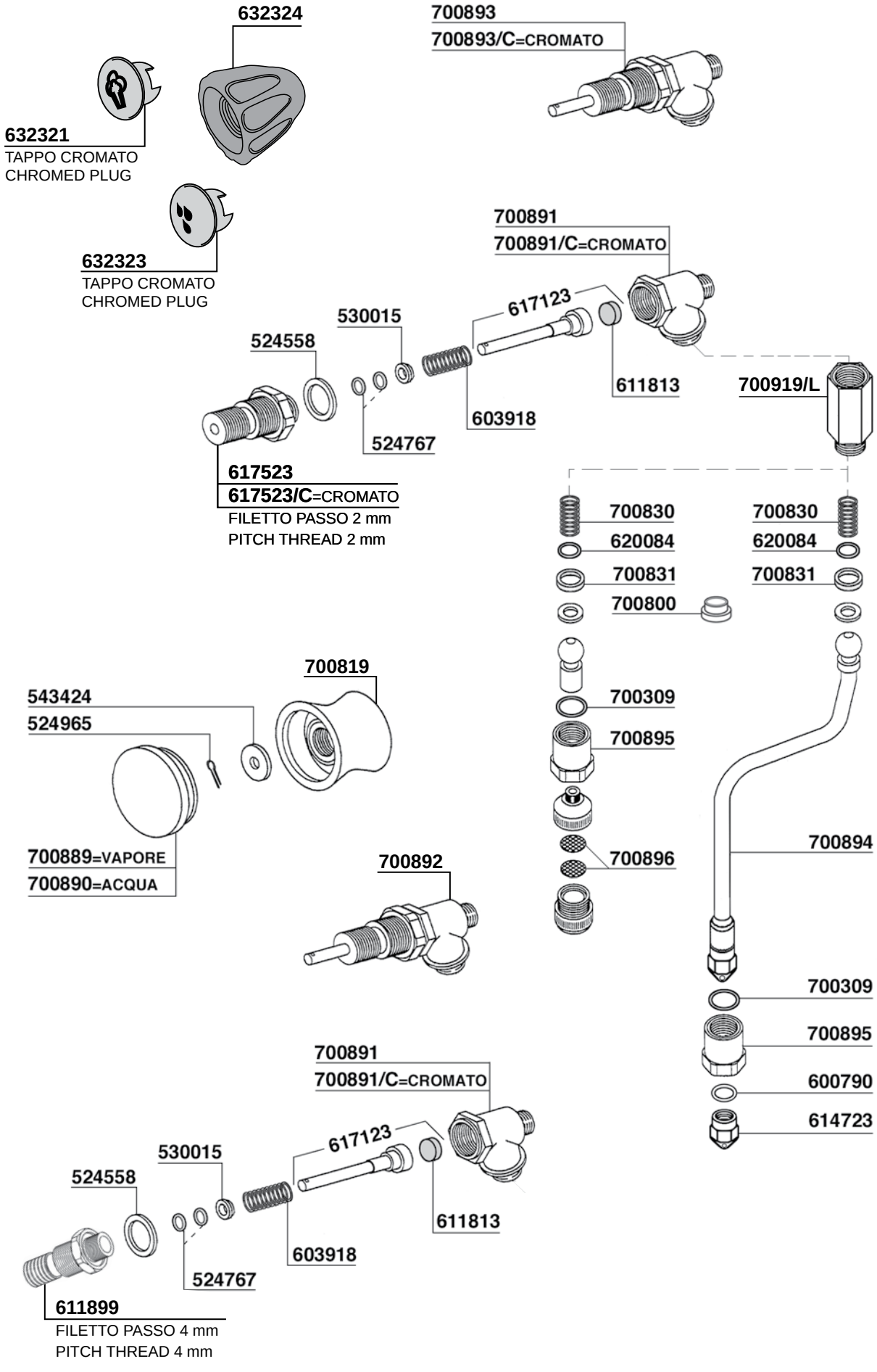
632324
632321
TAPPO CROMATO
CHROMED PLUG
632323
TAPPO CROMATO
CHROMED PLUG
700893
700893/C=CROMATO
700891
700891/C=CROMATO
617123
530015
524558
611813
700919/L
603918
524767
617523
617523/C=CROMATO
FILETTO PASSO 2 mm
PITCH THREAD 2 mm
700830
620084
700831
700800
700830
620084
700831
700819
543424
524965
700309
700895
700889=VAPORE
700890=ACQUA
700892
700896
700894
700309
700895
600790
614723
700891
700891/C=CROMATO
617123
530015
524558
611813
603918
524767
611899
FILETTO PASSO 4 mm
PITCH THREAD 4 mm

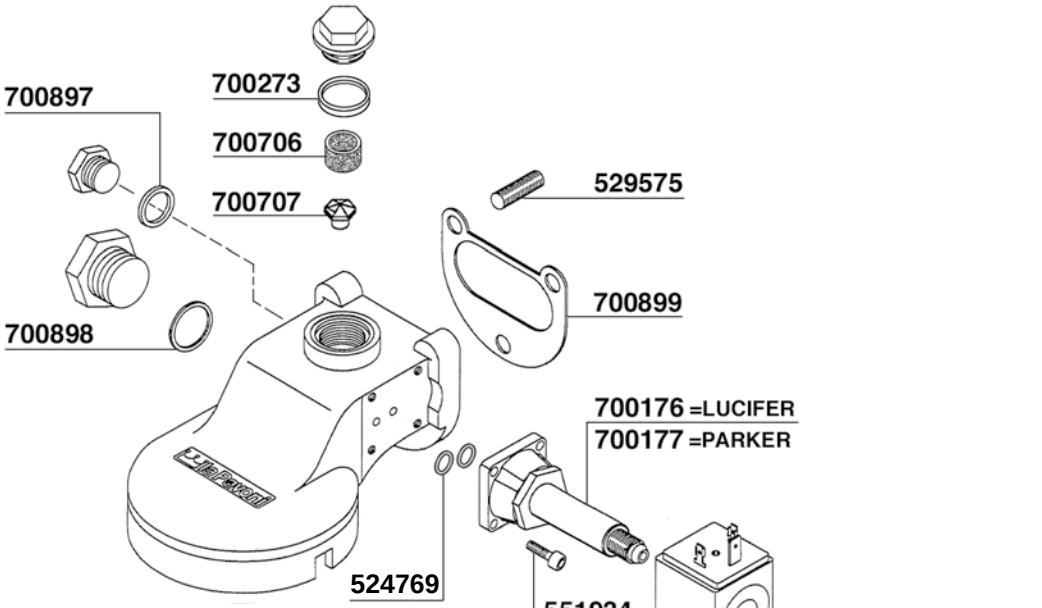

518608 mm.1
518608/5 mm.0,5
518610 mm.1 VITON

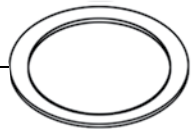

700883 mm.8
700883/V VITON
700883/5 mm.8,5
700883/5-F SILICON
700883/80 mm.8,5

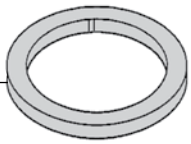

700915

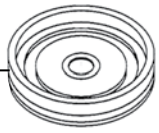

700900



526409
700823 ø 6,4mm HOLE
547101
552349 M5X12

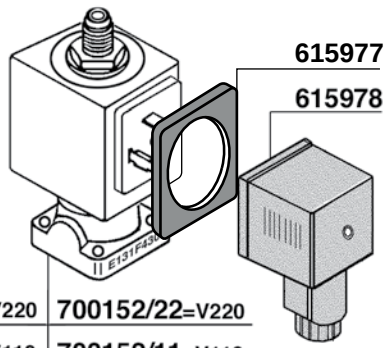

224

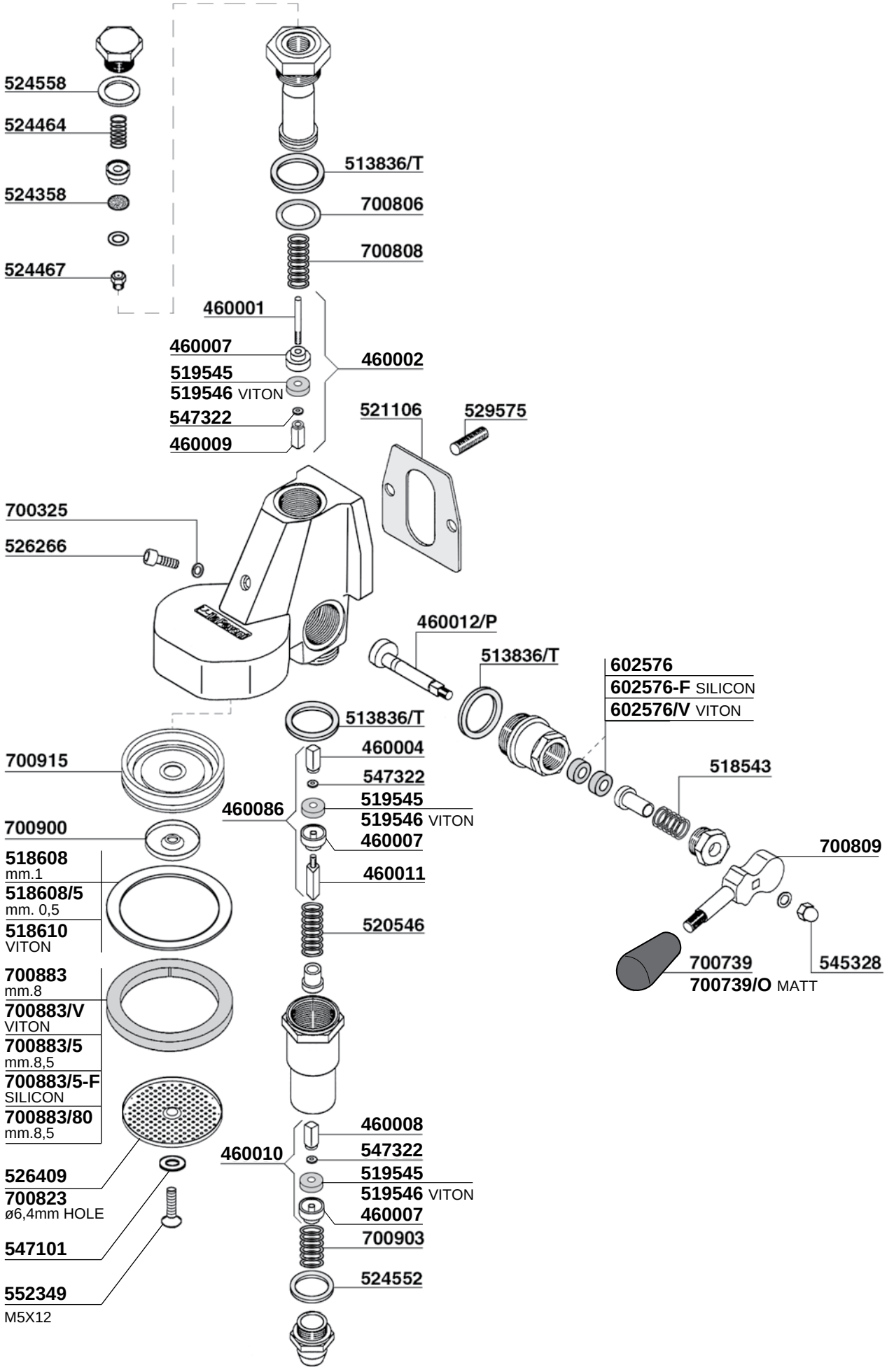
524558
524464
524358
524467
513836/T
700806
700808
460001
460007
519545
519546 VITON
547322
460009
460002
521106
529575
700325
526266
460012/P
513836/T
602576
602576-F SILICON
602576/V VITON
513836/T
460004
547322
519545
519546 VITON
460086
460007
460011
520546
518543
700809
700915
700900
518608
mm.1
518608/5
mm. 0,5
518610
VITON
700883
mm.8
700883/V
VITON
700883/5
mm.8,5
700883/5-F
SILICON
700883/80
mm.8,5
526409
700823
ø6,4mm HOLE
547101
552349
M5X12
460008
547322
519545
519546 VITON
460010
460007
700903
524552
700739
700739/O MATT
545328

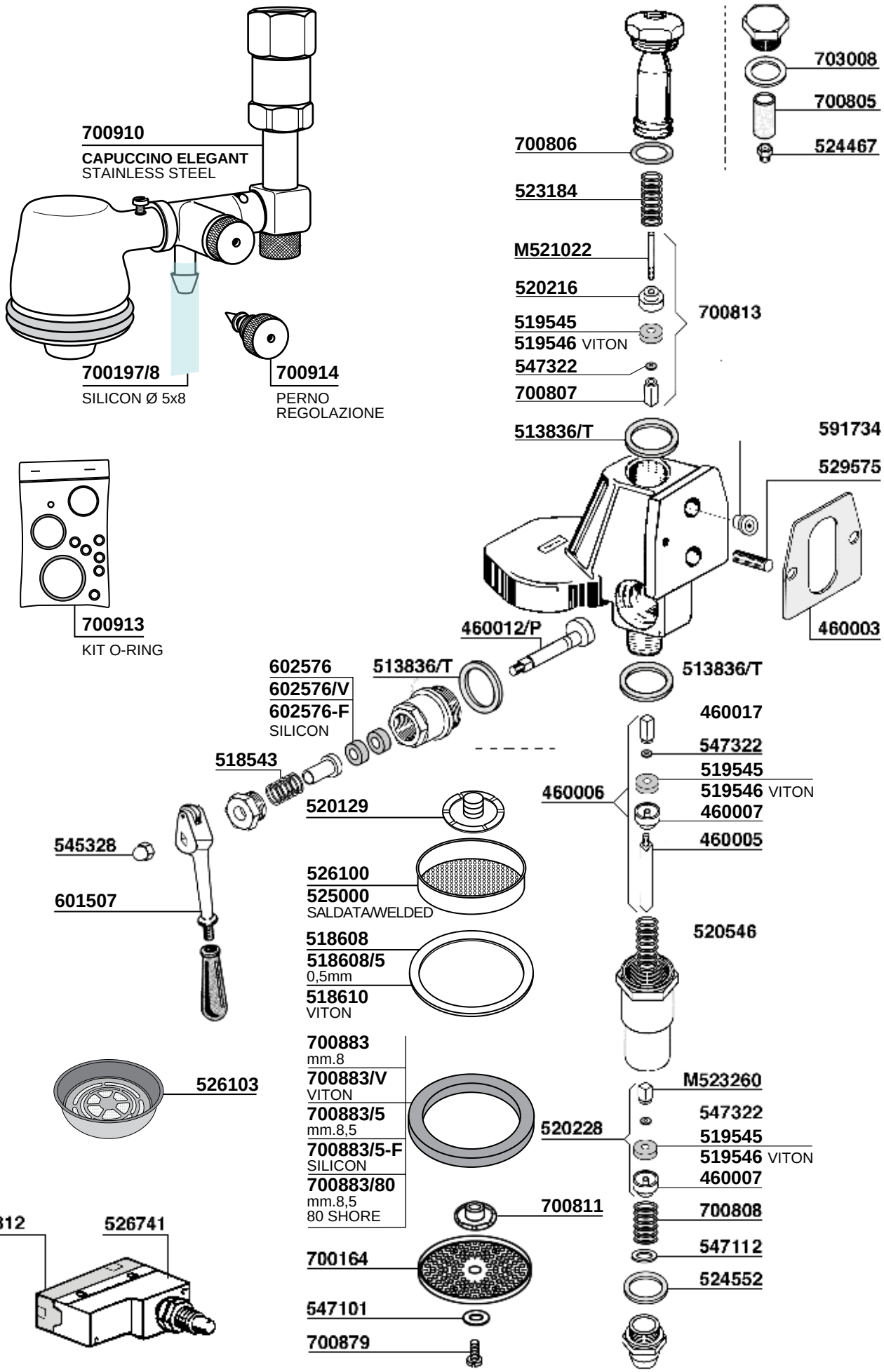
700910
CAPUCCINO ELEGANT
STAINLESS STEEL
700197/8
SILICON Ø 5x8
700914
PERNO
REGOLAZIONE
700913
KIT O-RING
703008
700805
524467
700806
523184
M521022
520216
519545
519546 VITON
547322
700807
700813
513836/T
591734
529575
460003
460012/P
513836/T
602576
602576/V
602576-F
SILICON
513836/T
518543
520129
460017
547322
519545
519546 VITON
460007
460005
460006
545328
601507
526100
525000
SALDATA/WELDED
518608
518608/5
0,5mm
518610
VITON
520546
526103
700883
mm.8
700883/V
VITON
700883/5
mm.8,5
700883/5-F
SILICON
700883/80
mm.8,5
80 SHORE
M523260
547322
519545
519546 VITON
460007
520228
700811
700808
547112
524552
700812
526741
700164
547101
700879

226

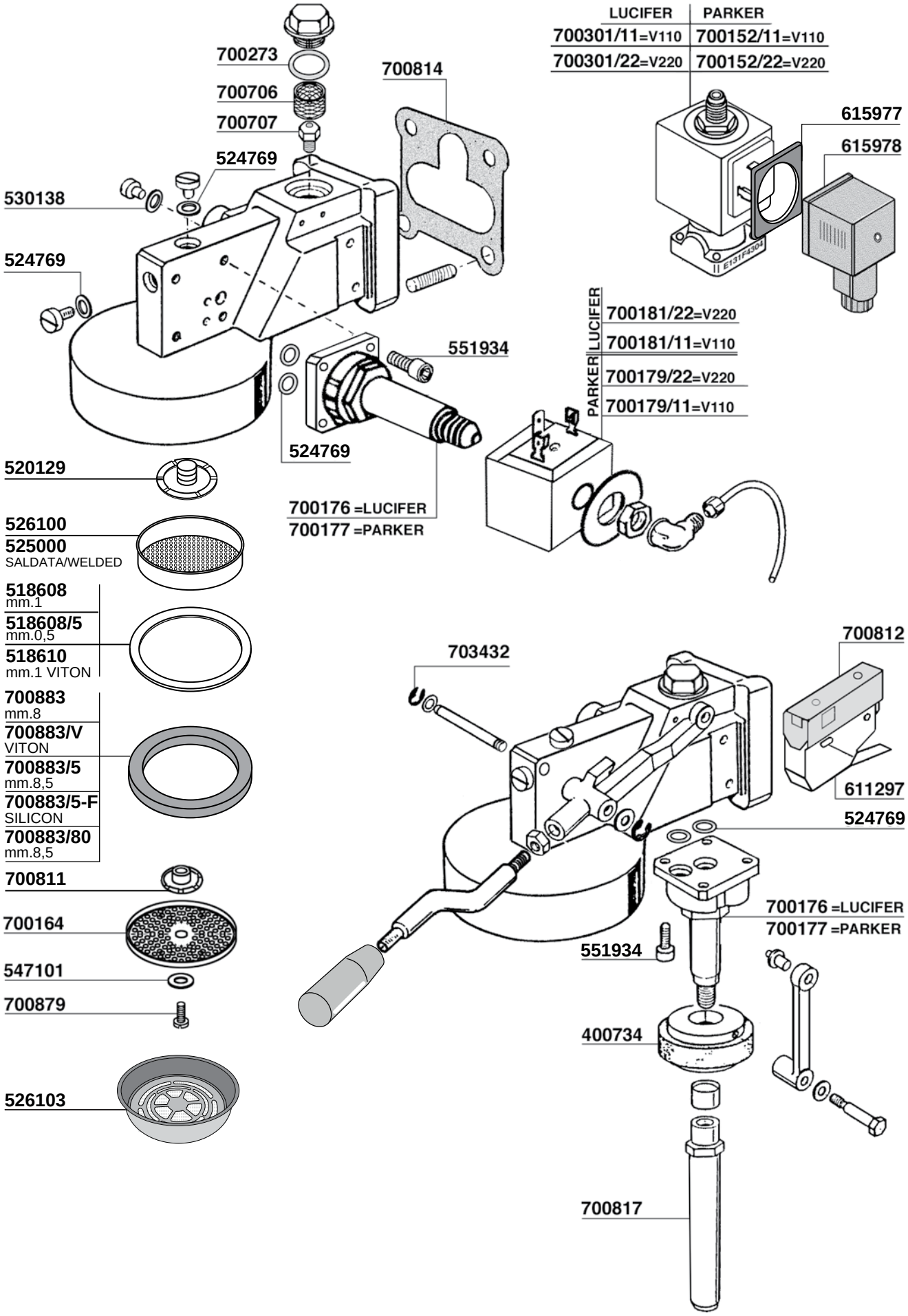
LUCIFER
PARKER
700301/11=V110
700152/11=V110
700301/22=V220
700152/22=V220
615977
615978
700273
700706
700707
524769
700814
530138
524769
551934
524769
700181/22=V220
700181/11=V110
700179/22=V220
700179/11=V110
700176 =LUCIFER
700177 =PARKER
520129
526100
525000
SALDATA/WELDED
518608
mm.1
518608/5
mm.0,5
518610
mm.1 VITON
700883
mm.8
700883/V
VITON
700883/5
mm.8,5
700883/5-F
SILICON
700883/80
mm.8,5
700811
700164
547101
700879
526103
703432
700812
611297
524769
700176 =LUCIFER
700177 =PARKER
551934
400734
700817

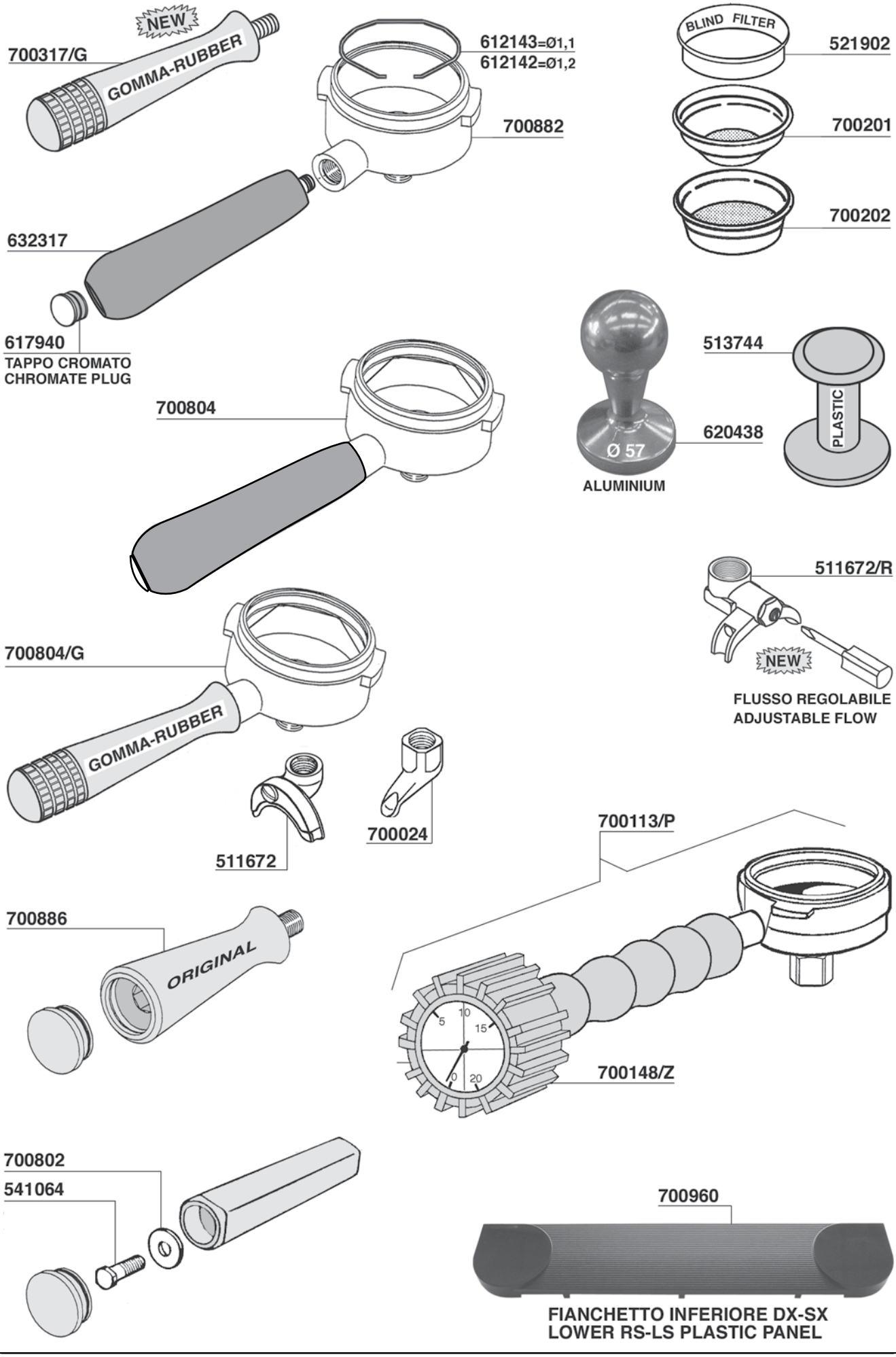
NEW
700317/G
GOMMA-RUBBER
612143=Ø1,1
612142=Ø1,2
700882
632317
617940
TAPPO CROMATO
CHROMATE PLUG
BLIND FILTER
521902
700201
700202
700804
513744
PLASTIC
Ø 57
620438
ALUMINIUM
511672/R
NEW
FLUSSO REGOLABILE
ADJUSTABLE FLOW
700804/G
GOMMA-RUBBER
511672
700024
700113/P
700886
ORIGINAL
700148/Z
700802
541064
700960
FIANCHETTO INFERIORE DX-SX
LOWER RS-LS PLASTIC PANEL

228

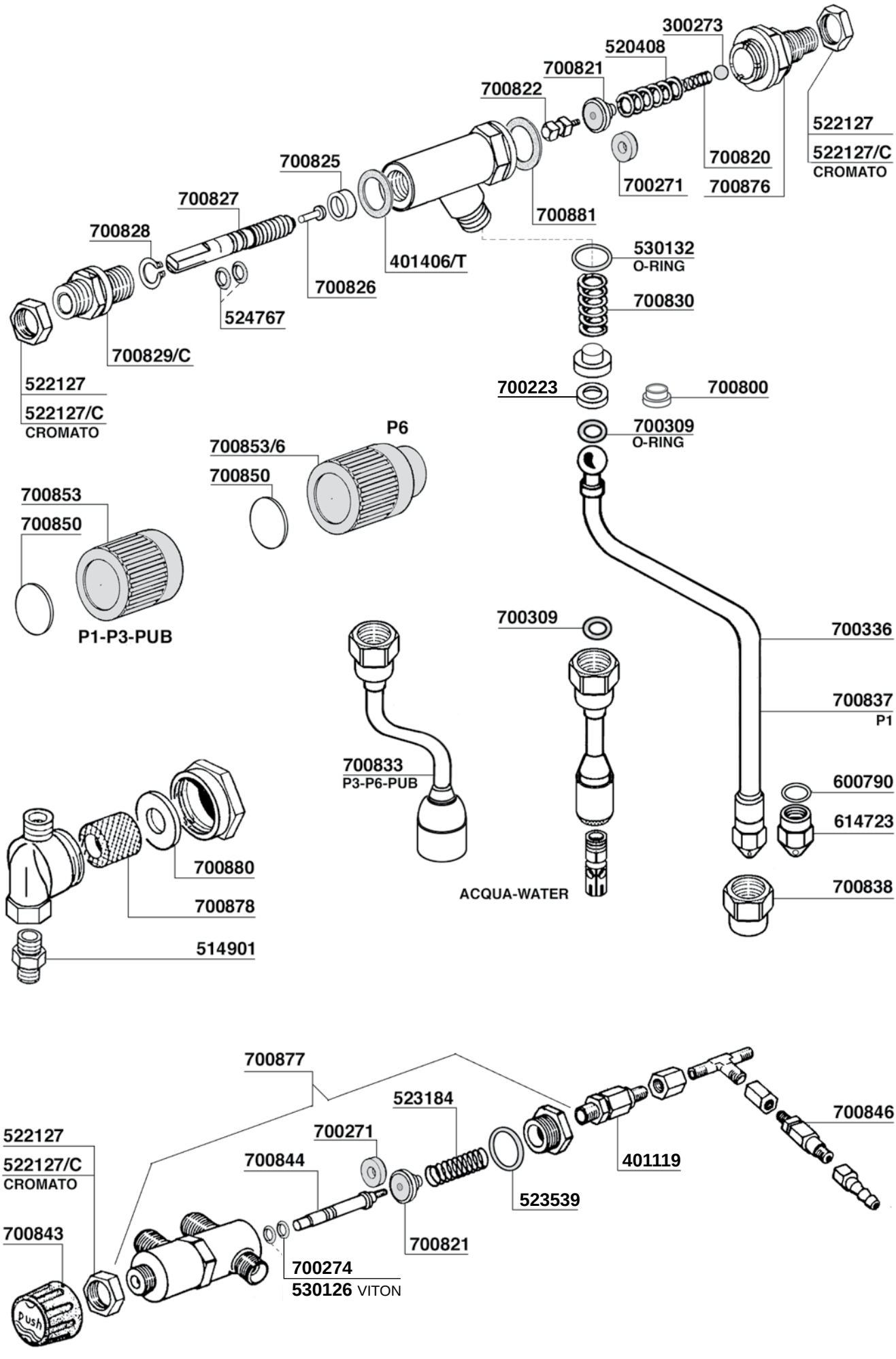
300273
520408
700821
700822
522127
522127/C
CROMATO
700820
700876
700271
700825
700827
700828
700881
401406/T
530132
O-RING
700826
524767
700830
700829/C
522127
522127/C
CROMATO
700223
700800
700309
O-RING
P6
700853/6
700850
700853
700850
P1-P3-PUB
700309
700336
700837
P1
700833
P3-P6-PUB
600790
614723
700880
700878
514901
ACQUA-WATER
700838
700877
523184
700846
522127
522127/C
CROMATO
700271
700844
401119
523539
700843
700821
700274
530126 VITON
Push

700856

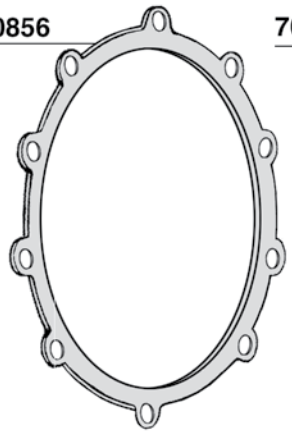

700907



400826/T

700858/22=W1500 V220 mm.140
700858/11=W1500 V110 mm.140

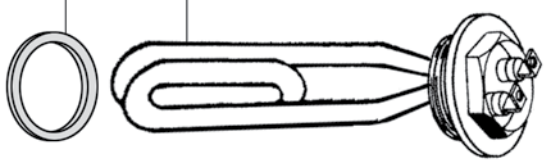

700860/22=GR/2 W1300 V220

700863

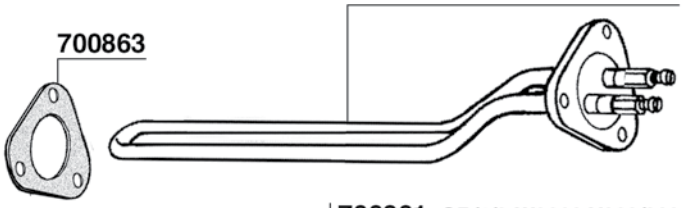

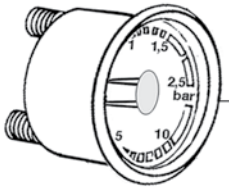

700874

700861=GR/1/2 W3000 V220/380
700861/11=GR/1/2 W2000 V110
700862=GR/2/3 W4000 V220/380
700862/11=GR/2/3 W3000 V110

700863

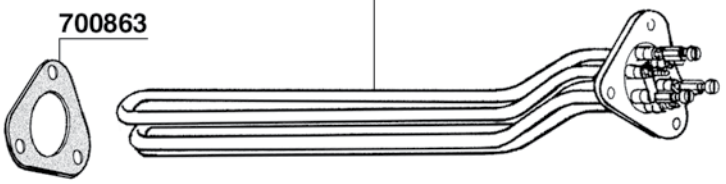

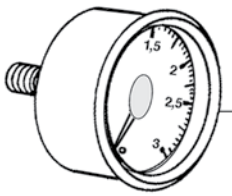

700875

700887 = 4500W 230/400V mm.290
700888 = GR2 3000W 230 mm.230

400826/T

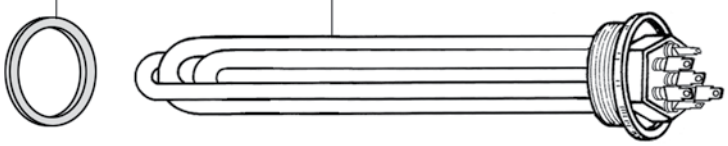

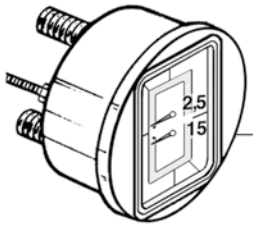

700884

615623

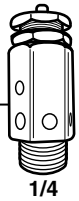

1/4

615624/A
CE certificato certified

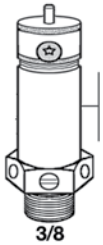

3/8

524555

700869/22=V220
700869/11=V110

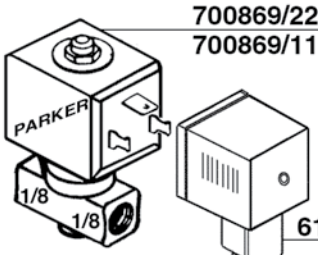

615978

ACQUA CALDA

701801



M12x1

701804



700857

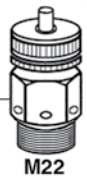

M22

700898



551937

530143



617903/G



615978/T



615979

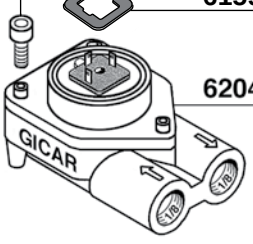

620404

700253/22=V220
700253/11=V110

615978/P

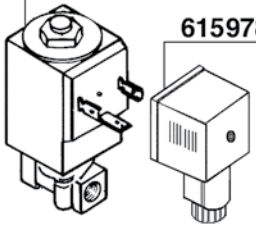

AUTOLIVELLO

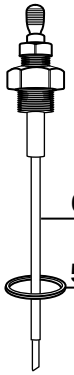

612601 120mm

524554

700737 =V220
700737/11=V110

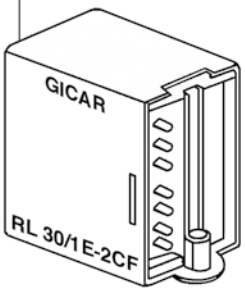

230

618968
524554
700839
528662
700840
700841
700840
700839
700170/V

618970

700849
ADESIVO
700842

513051

700382

615152
DEVIATORE



700941 =GR2-3 V110 PUB GICAR 951533
700942 =GR2-3 V220 BAR GICAR 951515
700942/11 =GR2-3 V110 BAR GICAR 951516
700943 =GR2-3 V220 BAR GICAR 951532

700864

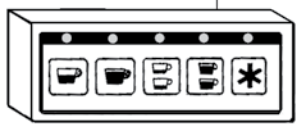

700950



700951



700871
613656

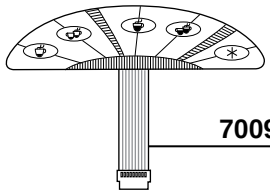

700952

700908
700909

700930=V220
700931=V110



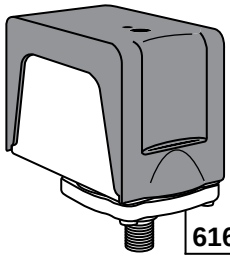

616597 CE/UL

PAVONI

EUROPICCOLA - PROFESSIONAL

MODELLO CROMATO - CHROMED MODEL

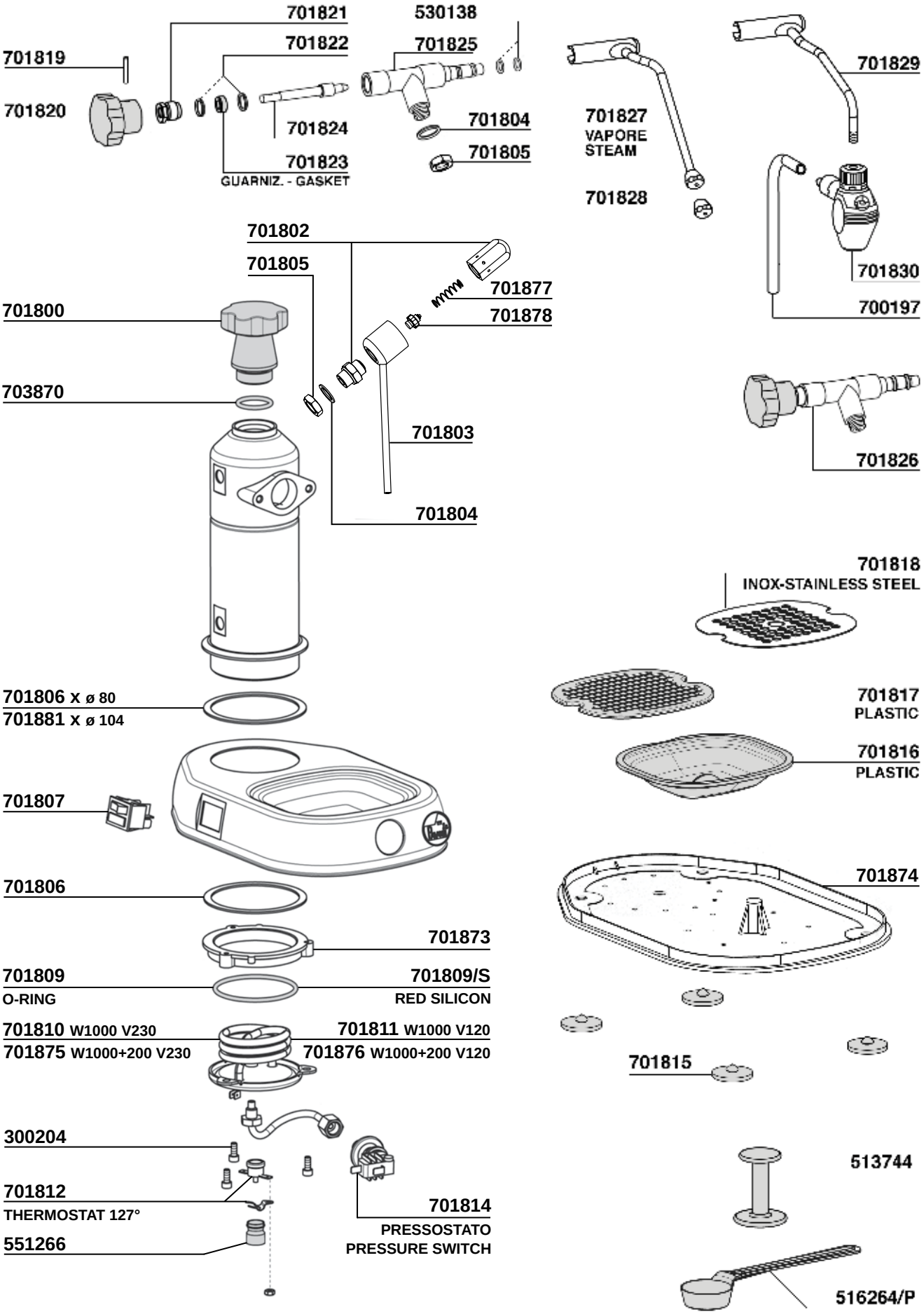

EUROPICCOLA - PROFESSIONAL

MODELLO CROMATO - CHROMED MODEL

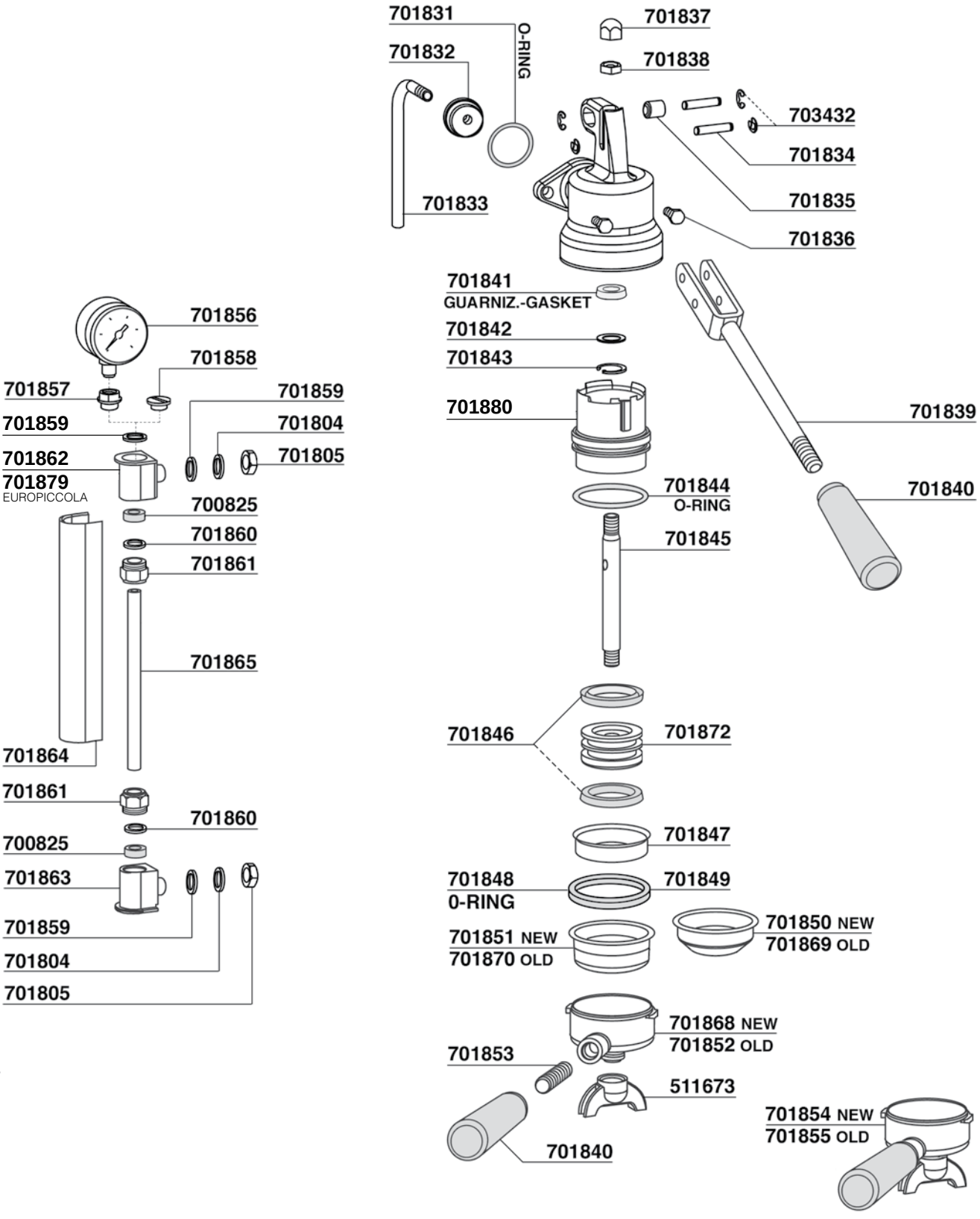

KIT COMPLETO GUARIZIONI EUROPICCOLA
EUROPICCOLA GASKET COMPLETE KIT COD. 701866

KIT COMPLETO GUARNIZIONI PROFESSIONAL
PROFESSIONAL GASKET COMPLETE KIT COD.701867

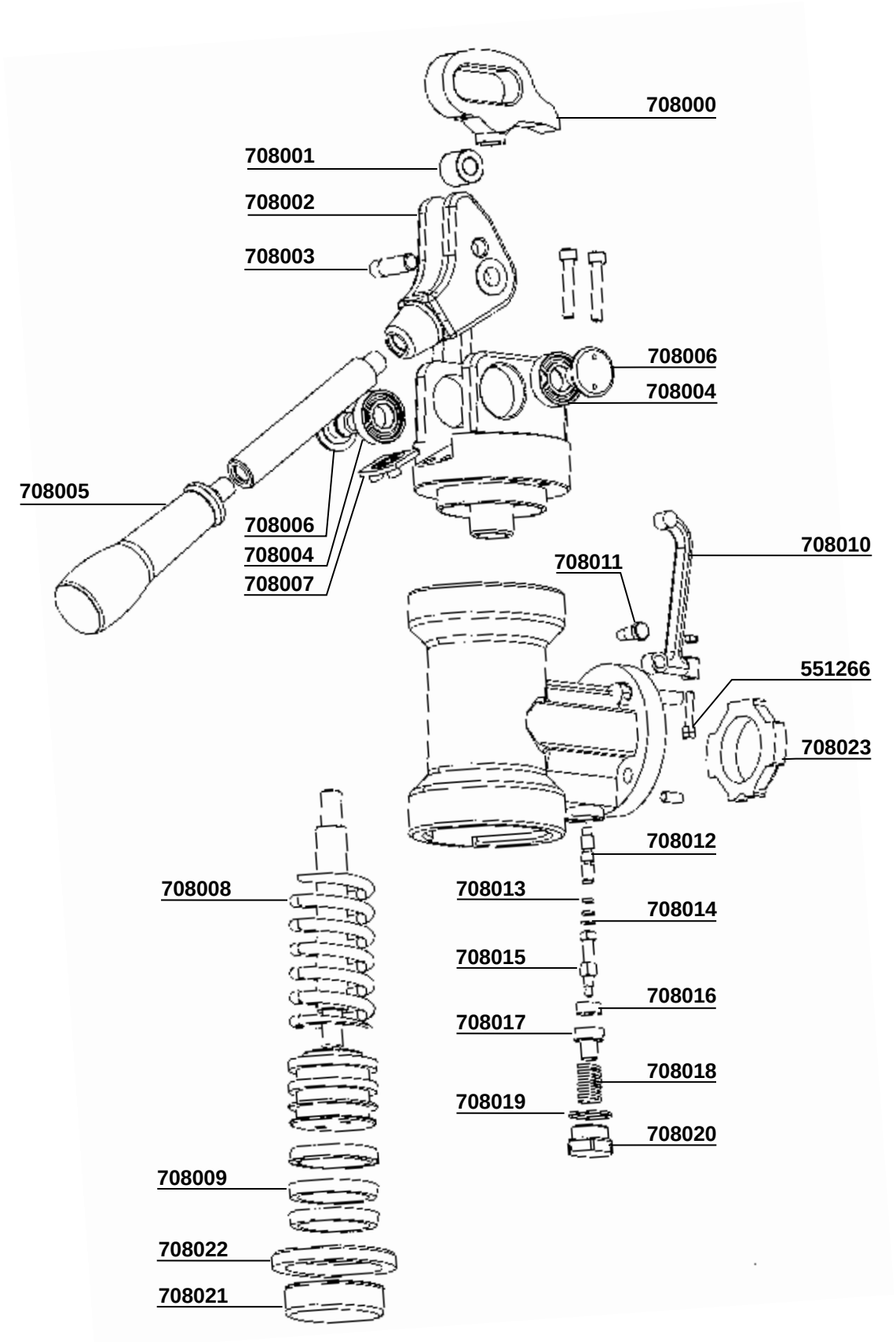
708000
708001
708002
708003
708006
708004
708005
708006
708004
708007
708010
708011
551266
708023
708012
708008
708013
708014
708015
708016
708017
708018
708019
708020
708009
708022
708021

PROFITEC

PRO 500 - PRO 600

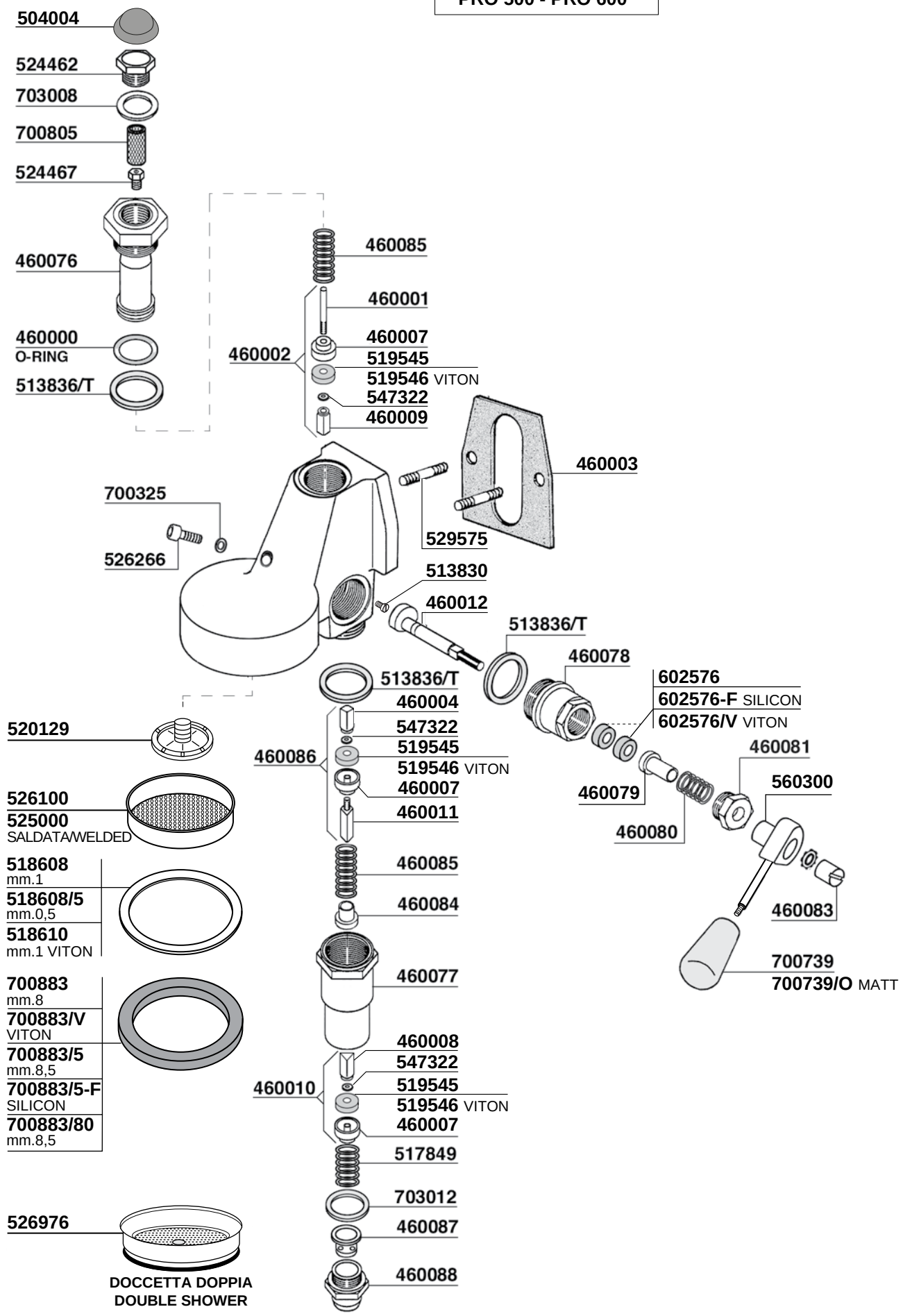

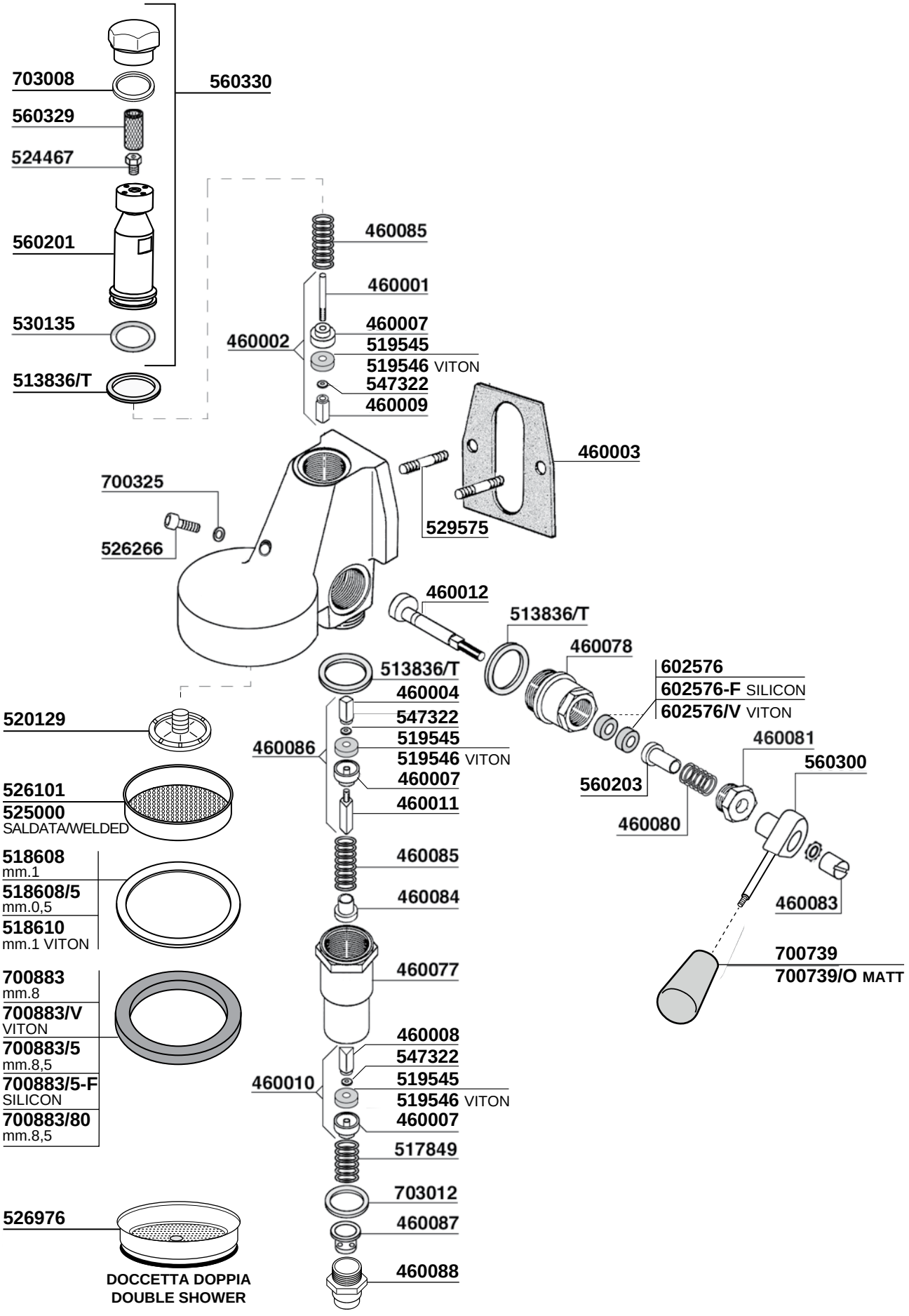
703008
560330
560329
524467
560201
530135
513836/T
460085
460001
460007
460002
519545
519546 VITON
547322
460009
460003
700325
526266
529575
460012
513836/T
460078
602576
602576-F SILICON
602576/V VITON
513836/T
460004
547322
519545
460086
519546 VITON
460007
460011
460081
560300
560203
460080
520129
526101
525000
SALDATA/WELDED
518608
mm.1
518608/5
mm.0,5
518610
mm.1 VITON
460085
460084
460083
700739
700739/O MATT
460077
700883
mm.8
700883/V
VITON
700883/5
mm.8,5
700883/5-F
SILICON
700883/80
mm.8,5
460008
547322
519545
460010
519546 VITON
460007
517849
703012
460087
526976
460088
DOCCETTA DOPPIA
DOUBLE SHOWER

PRO 800

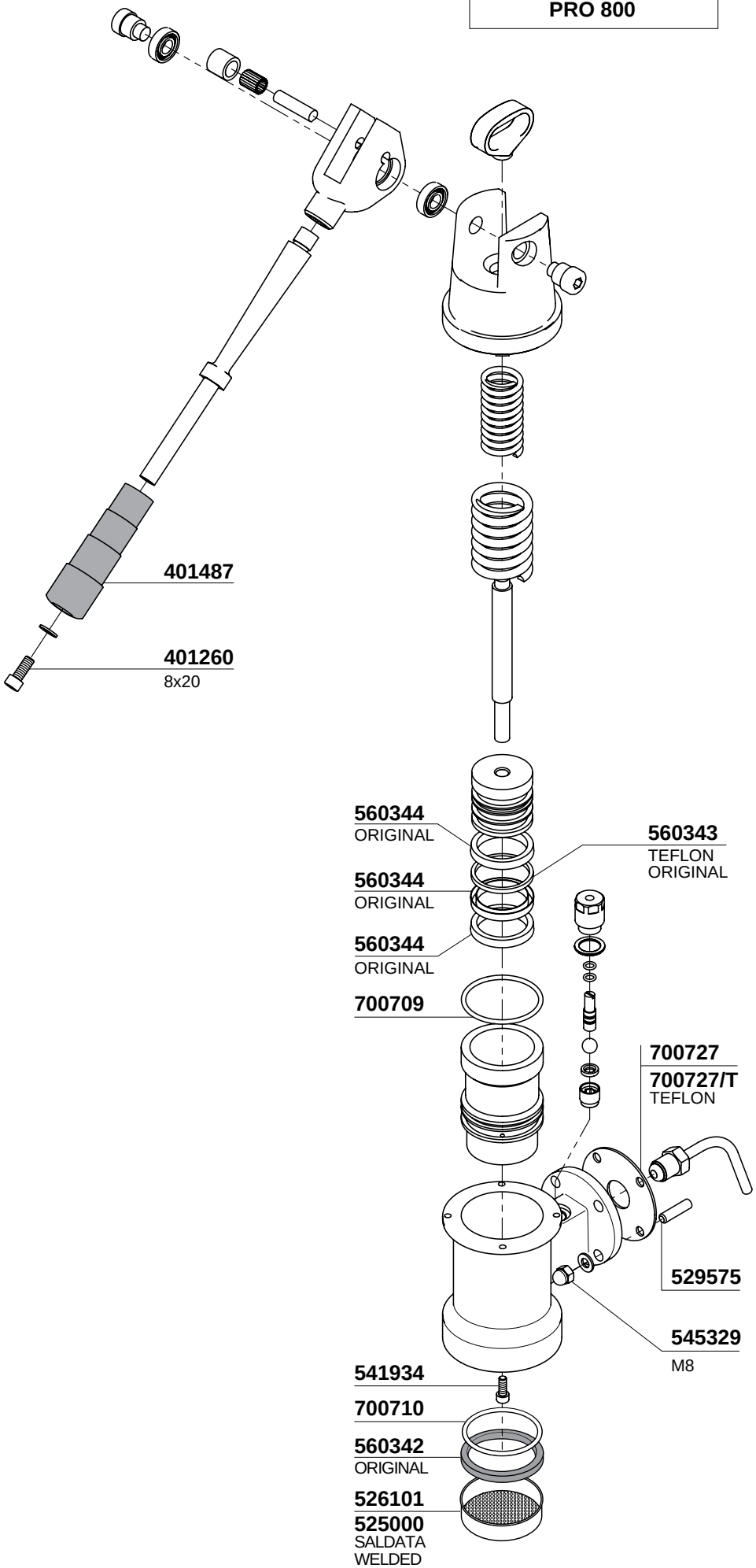
401487
401260
8x20
560344
ORIGINAL
560343
TEFLON
ORIGINAL
560344
ORIGINAL
560344
ORIGINAL
700709
700727
700727/T
TEFLON
529575
545329
M8
541934
700710
560342
ORIGINAL
526101
525000
SALDATA
WELDED

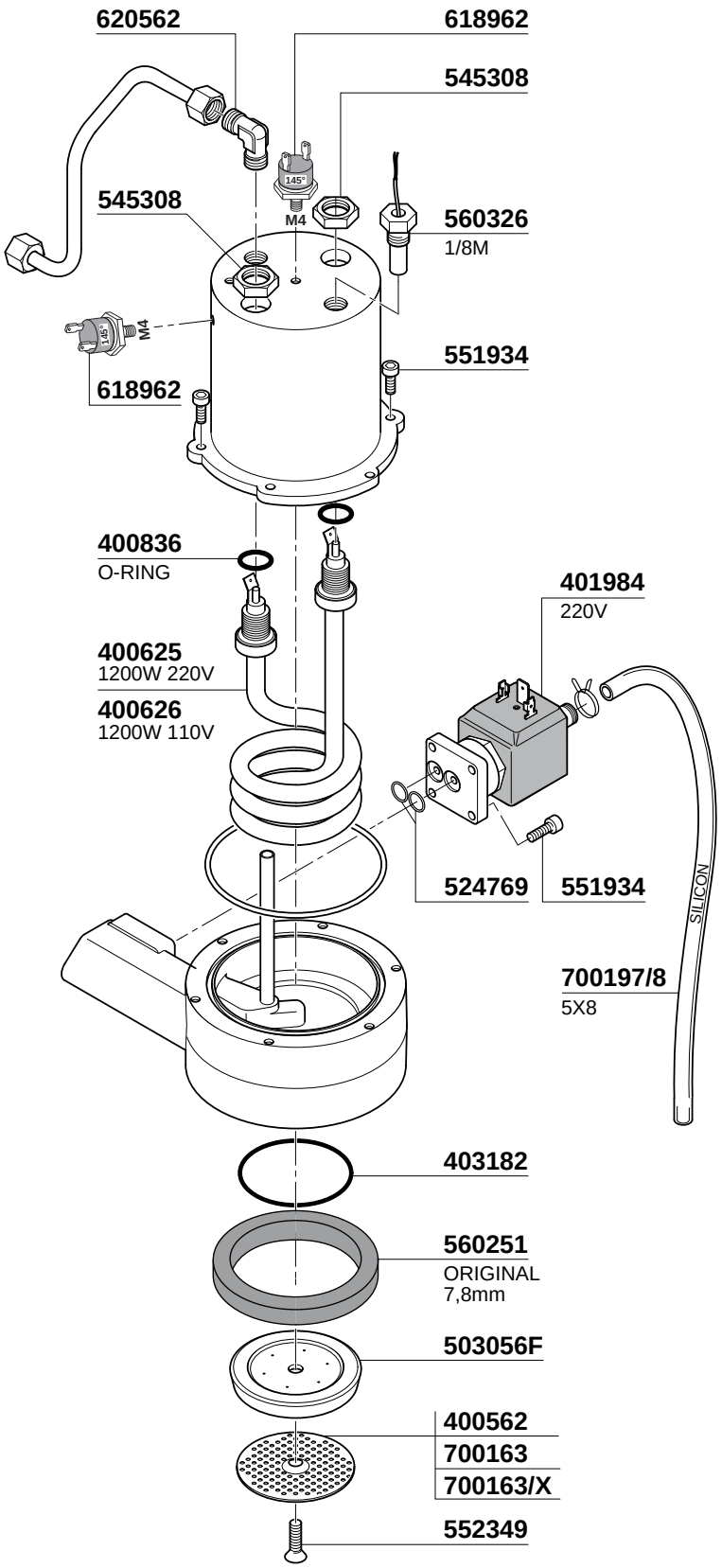
620562
618962
545308
545308
M4
560326
1/8M
M4
551934
618962
400836
O-RING
401984
220V
400625
1200W 220V
400626
1200W 110V
524769
551934
SILICON
700197/8
5X8
403182
560251
ORIGINAL
7,8mm
503056F
400562
700163
700163/X
552349

514417 5gr
514418 6gr
526418 6gr
521834 6gr
521830 7gr
521835 7gr
521832 8gr
521833 7gr
MICROFORI
MICROHOLES

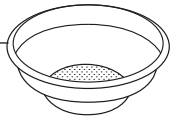

516575 12gr
521998 12gr
521994 14gr
521997 14gr
514419 14gr
ridgeless
526208 18gr
526757 21gr
300059 21gr
526758 24gr
521996 14gr
MICROFORI
MICROHOLES

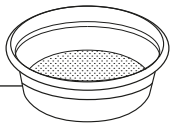

521901
521902

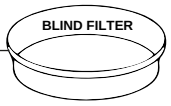

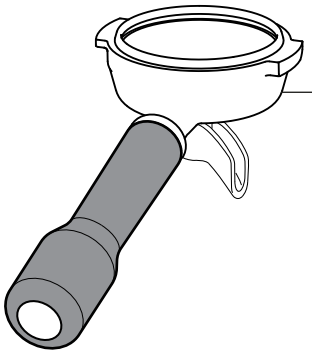

560301
ORIGINAL

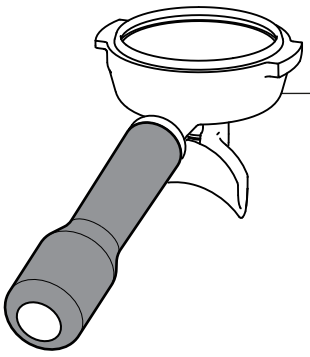

560302
ORIGINAL



612143 Ø1,1 mm
612142 Ø1,2 mm

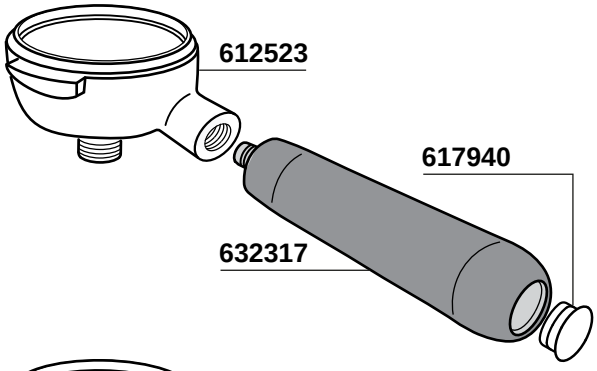

612523
617940
632317

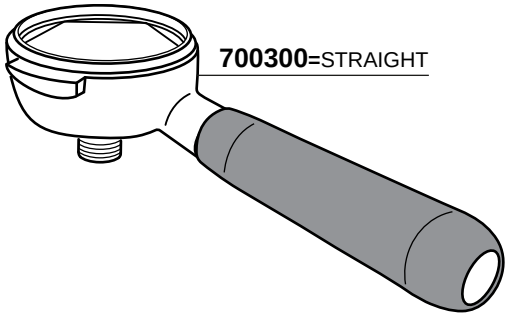

700300=STRAIGHT

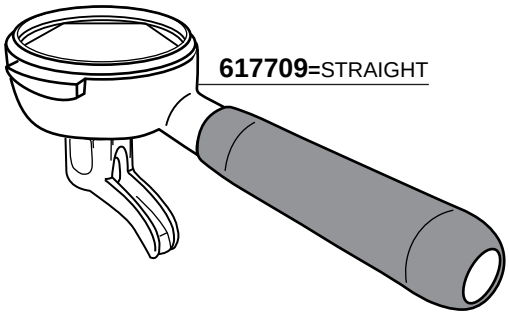

617709=STRAIGHT

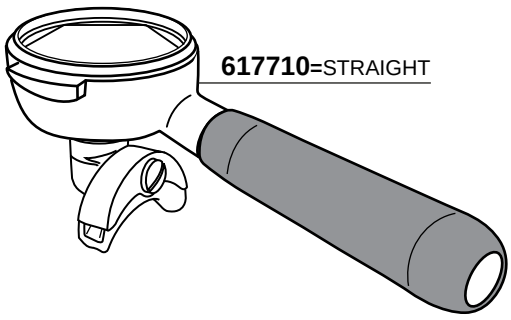

617710=STRAIGHT



511675



511674

514417 5gr
514418 6gr
526418 6gr
521834 6gr
521830 7gr
521835 7gr
521832 8gr
521833 7gr
MICROFORI
MICROHOLES

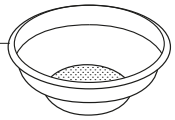

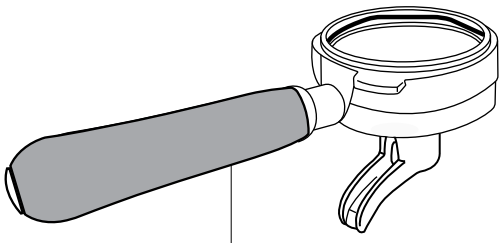

700795

516575 12gr
521998 12gr
521994 14gr
521997 14gr
514419 14gr
ridgeless
526208 18gr
526757 21gr
300059 21gr
526758 24gr
521996 14gr
MICROFORI
MICROHOLES

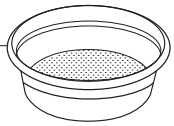

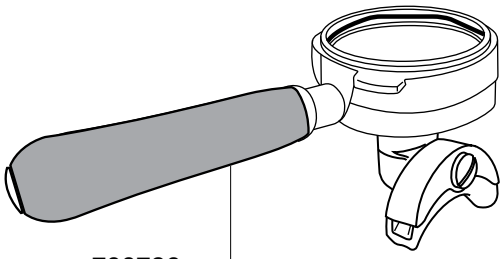

700796

521901
521902

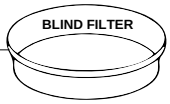

612143 Ø1,1mm
612142 Ø1,2mm

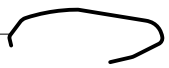

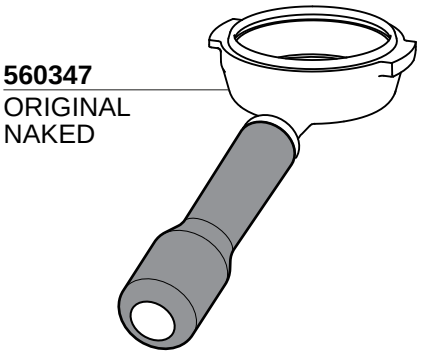

560347
ORIGINAL
NAKED

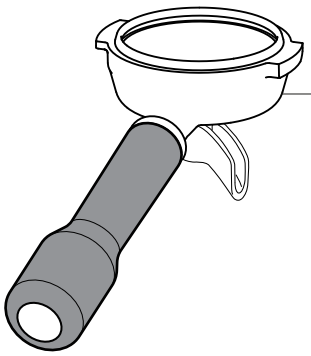

560345
ORIGINAL

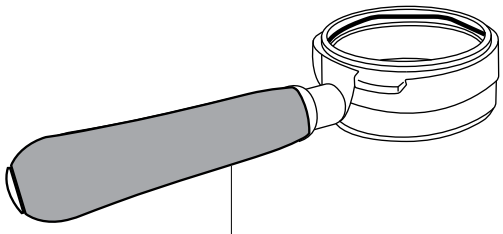

700721/N
NAKED

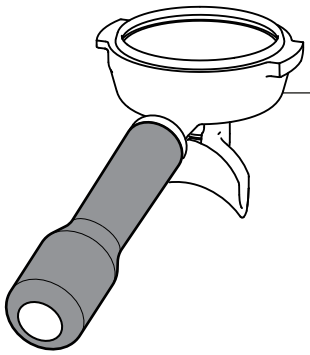

560346
ORIGINAL

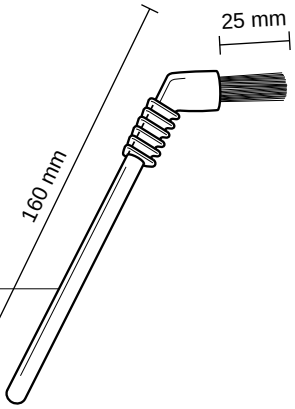

701038
ARANCIONE/ORANGE
SETOLE/BRISTLES Ø8mm

701038/N
NERO/BLACK
SETOLE/BRISTLES Ø8mm

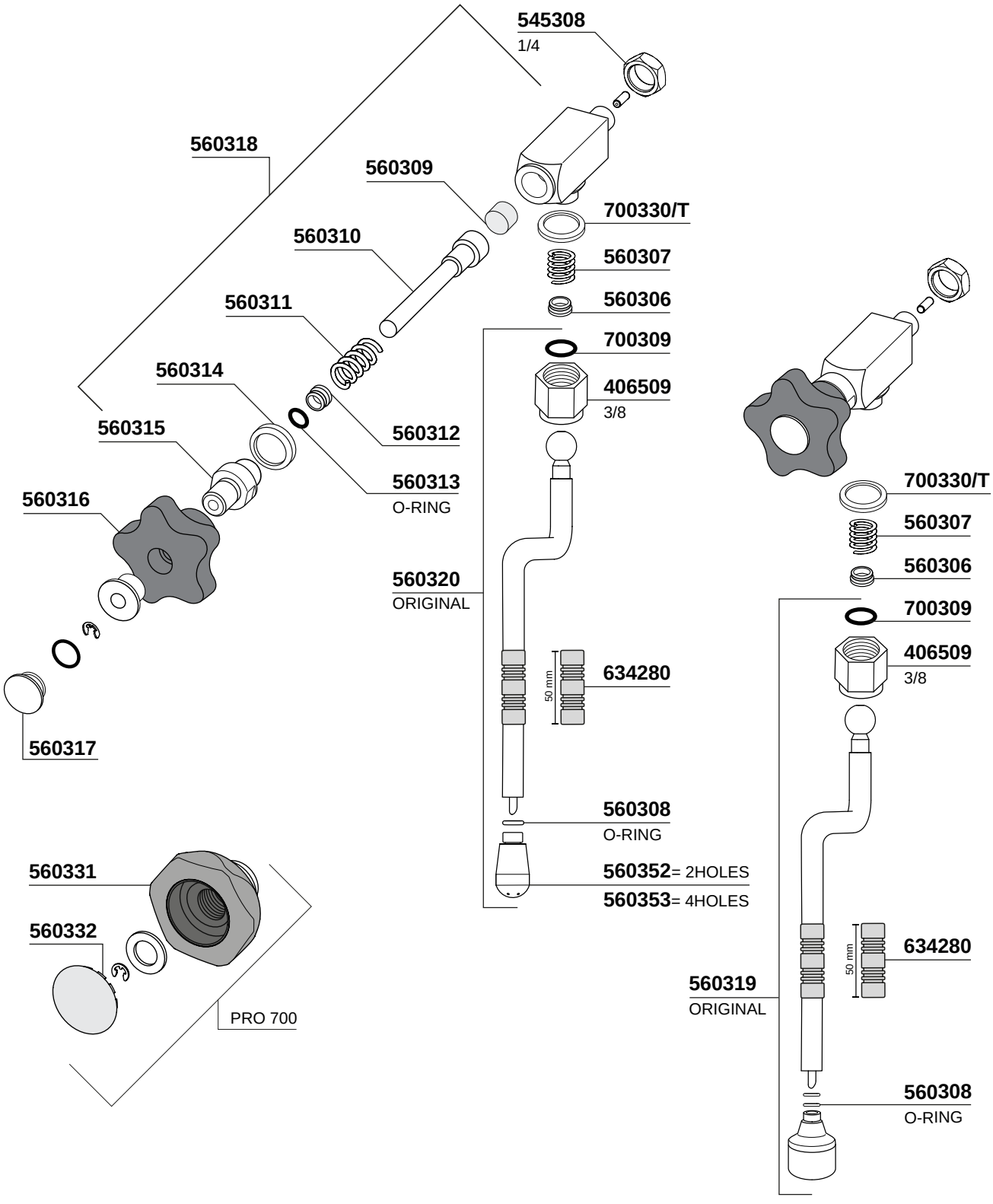
545308
1/4
560318
560309
700330/T
560310
560307
560311
560306
700309
560314
406509
3/8
560315
560312
560313
O-RING
560316
700330/T
560307
560306
560320
ORIGINAL
700309
406509
3/8
634280
50 mm
560317
560308
O-RING
560352= 2HOLES
560353= 4HOLES
560331
560332
PRO 700
634280
50 mm
560319
ORIGINAL
560308
O-RING

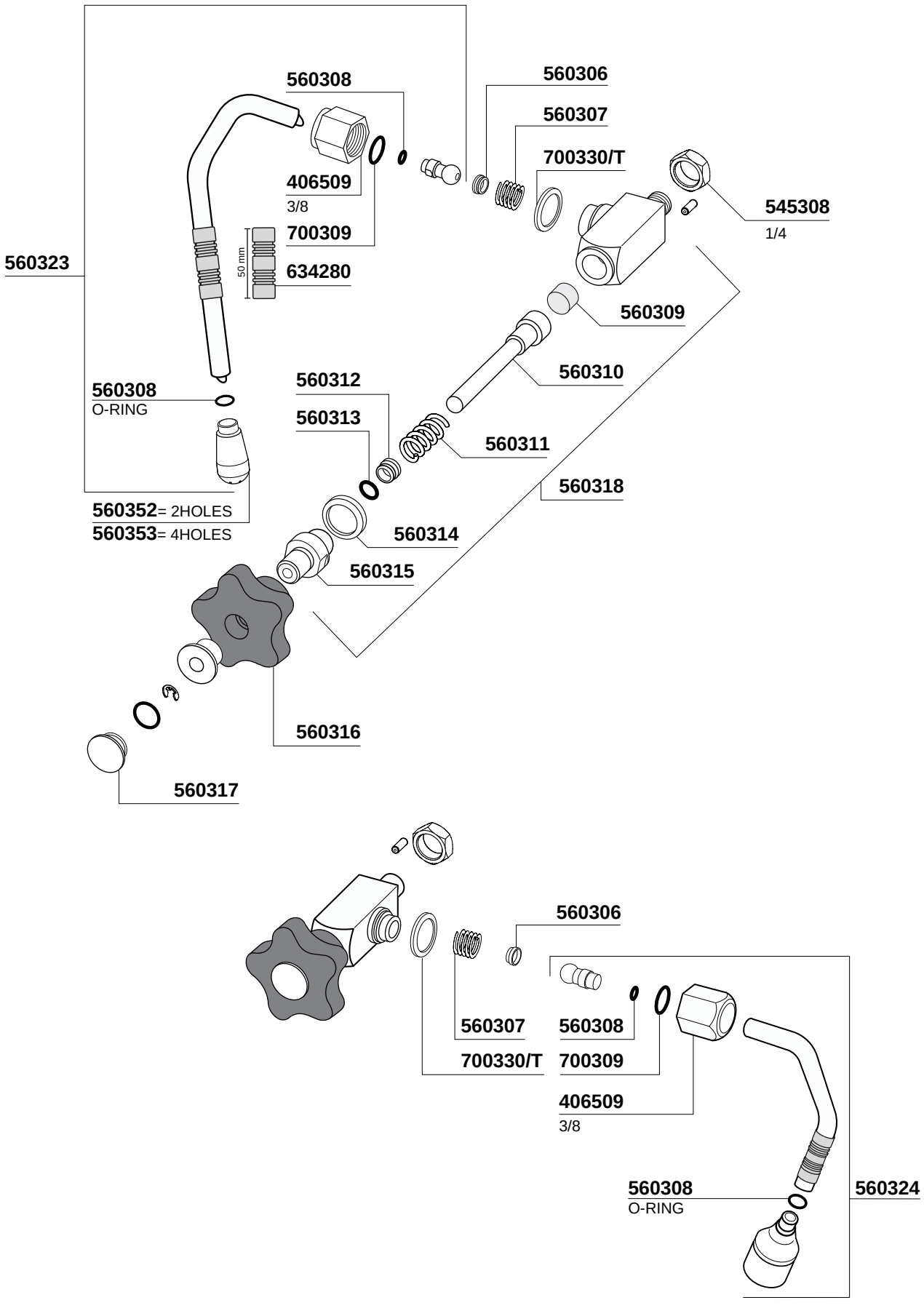
560308
560306
560307
700330/T
406509
3/8
700309
634280
50 mm
545308
1/4
560323
560309
560310
560308
O-RING
560312
560313
560311
560318
560352= 2HOLES
560353= 4HOLES
560314
560315
560316
560317
560306
560307
560308
700330/T
700309
406509
3/8
560308
O-RING
560324

242

PRO 300

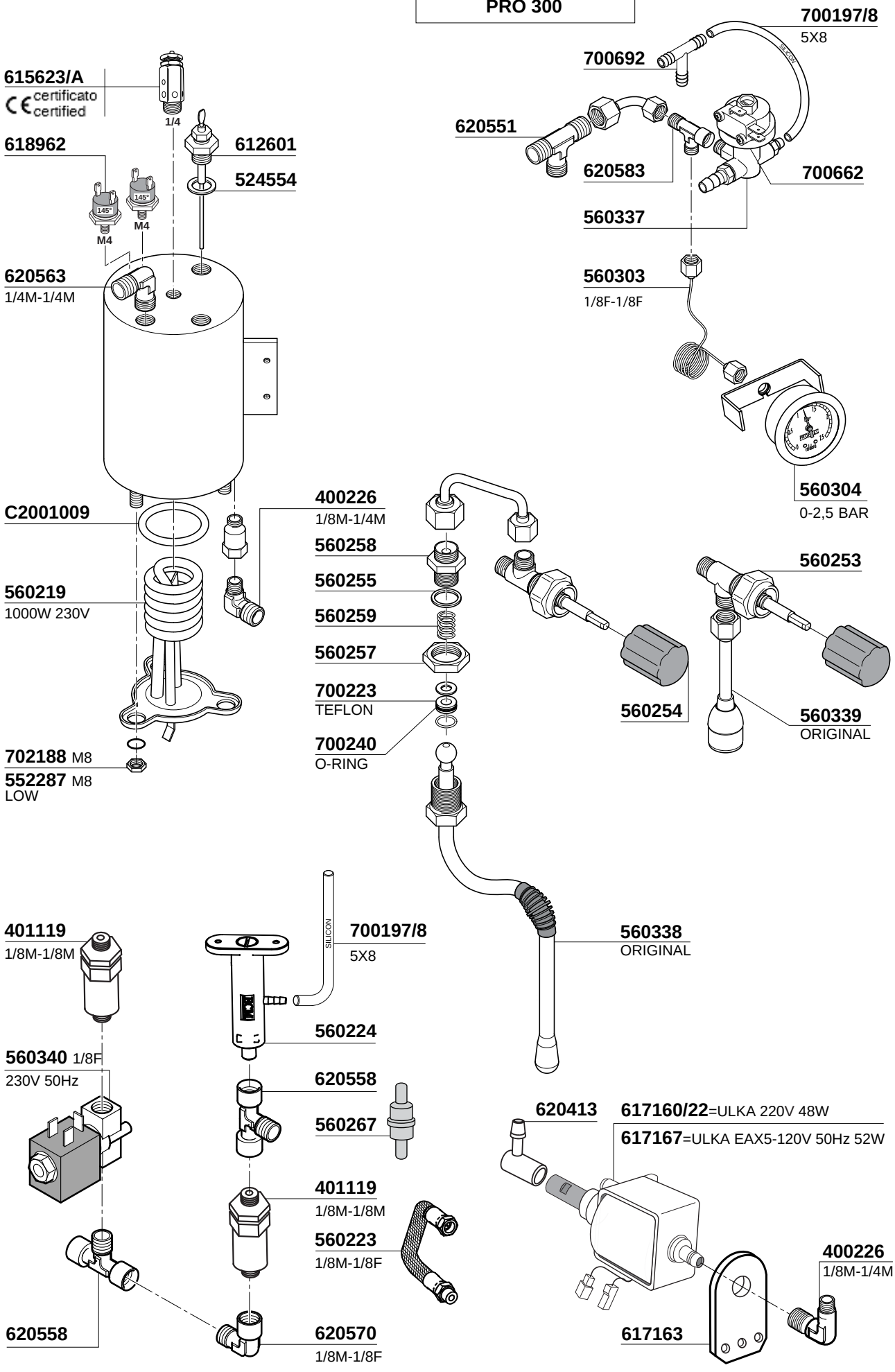
615623/A
certificato
certified
1/4
618962
612601
524554
145°
M4
620563
1/4M-1/4M
C2001009
560219
1000W 230V
702188 M8
552287 M8
LOW
400226
1/8M-1/4M
560258
560255
560259
560257
700223
TEFLON
700240
O-RING
700692
700197/8
5X8
620551
620583
700662
560337
560303
1/8F-1/8F
560304
0-2,5 BAR
560253
560254
560339
ORIGINAL
560338
ORIGINAL
401119
1/8M-1/8M
560340 1/8F
230V 50Hz
700197/8
5X8
560224
620558
560267
401119
1/8M-1/8M
560223
1/8M-1/8F
620558
620570
1/8M-1/8F
620413
617160/22=ULKA 220V 48W
617167=ULKA EAX5-120V 50Hz 52W
400226
1/8M-1/4M
617163

PRO 500

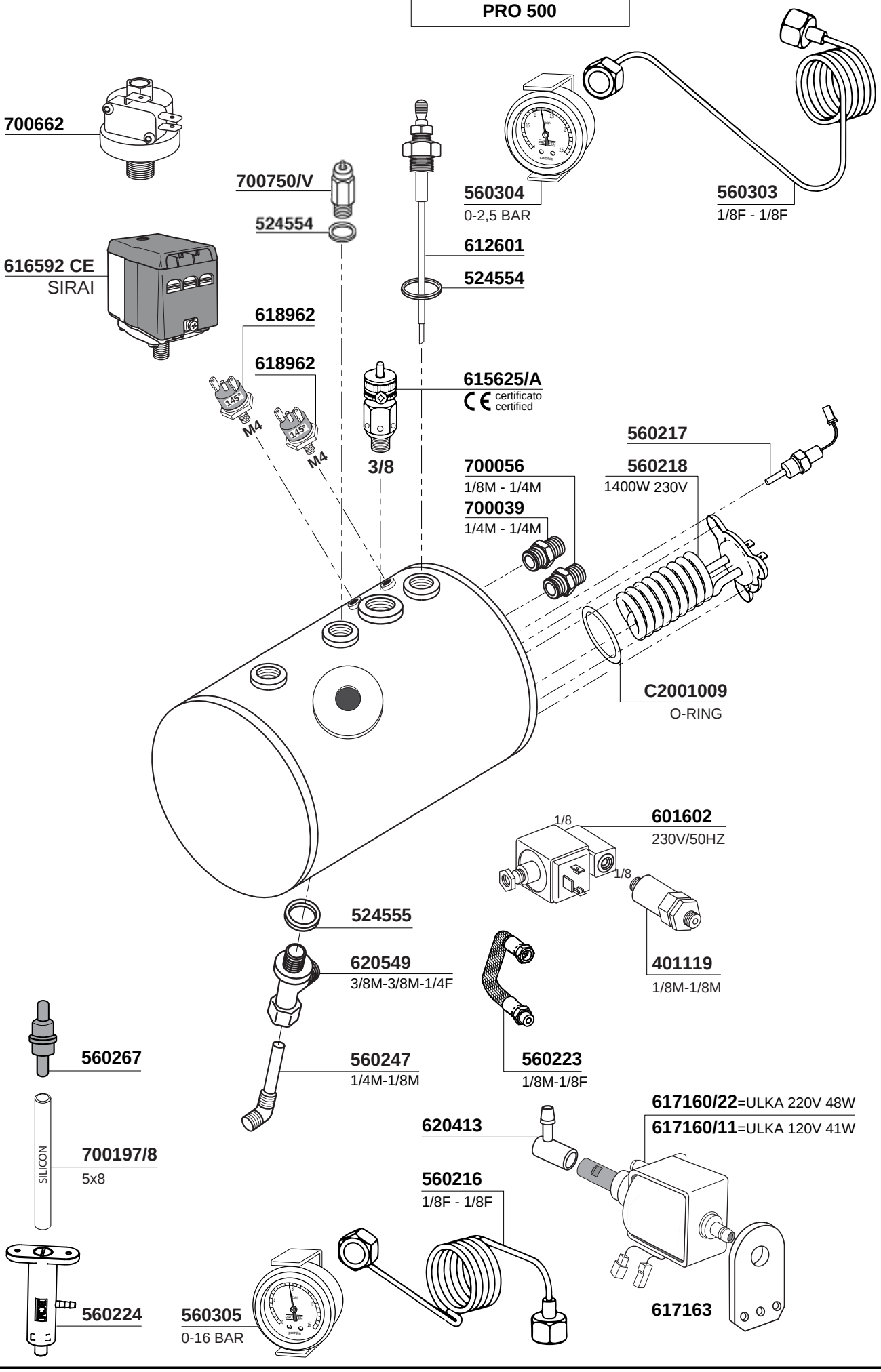
700662
700750/V
524554
616592 CE
SIRAI
618962
618962
M4
M4
145°
145°
612601
524554
615625/A
CE certificato certified
3/8
560304
0-2,5 BAR
560303
1/8F - 1/8F
560217
560218
1400W 230V
700056
1/8M - 1/4M
700039
1/4M - 1/4M
C2001009
O-RING
1/8
601602
230V/50HZ
1/8
401119
1/8M-1/8M
524555
620549
3/8M-3/8M-1/4F
560247
1/4M-1/8M
560223
1/8M-1/8F
560267
SILICON
700197/8
5x8
560224
620413
617160/22=ULKA 220V 48W
617160/11=ULKA 120V 41W
560216
1/8F - 1/8F
560305
0-16 BAR
617163

PRO 600

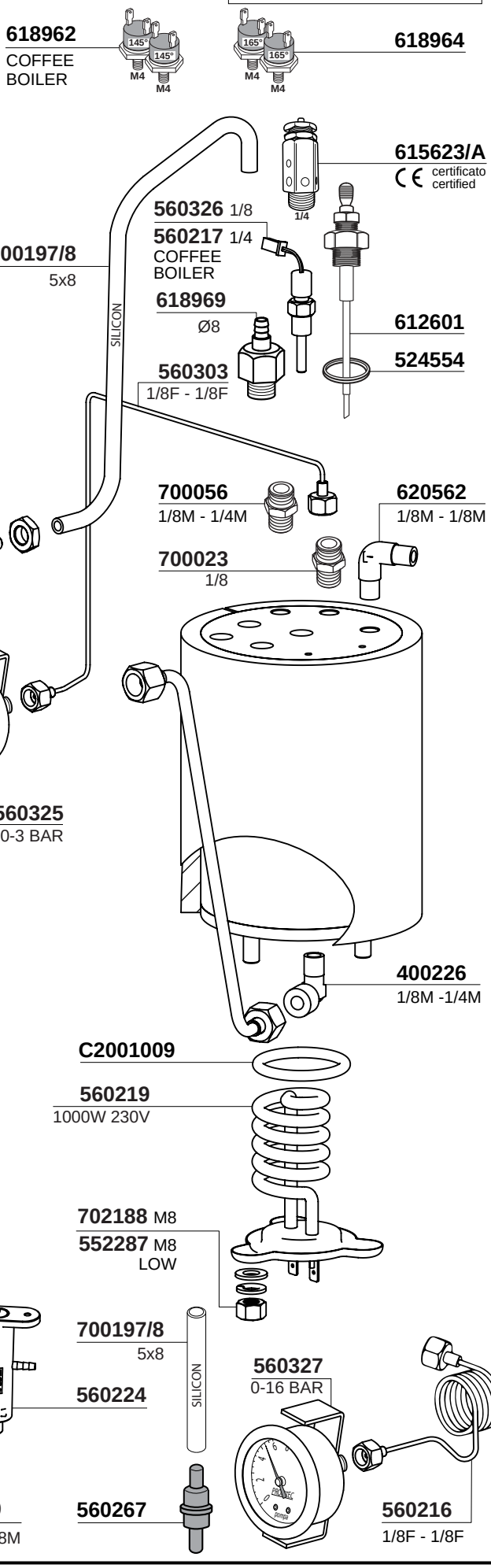
618962
COFFEE
BOILER
145°
145°
M4
M4
165°
165°
M4
M4
618964
615623/A
certificato
certified
1/4
560326 1/8
560217 1/4
COFFEE
BOILER
700197/8
5x8
SILICON
618969
Ø8
612601
524554
560303
1/8F - 1/8F
700056
1/8M - 1/4M
620562
1/8M - 1/8M
620563
1/4M - 1/4M
COFFEE
BOILER
700023
1/8
560325
0-3 BAR
400226
1/8M -1/4M
C2001009
560219
1000W 230V
702188 M8
552287 M8
LOW
560223
1/8M - 1/8F
1/8
700197/8
5x8
SILICON
560224
560327
0-16 BAR
617160/22=ULKA 220V 48W
1/8
1/8
601602
230V/50HZ
401119
1/8M - 1/8M
560267
560216
1/8F - 1/8F
617163

PRO 700

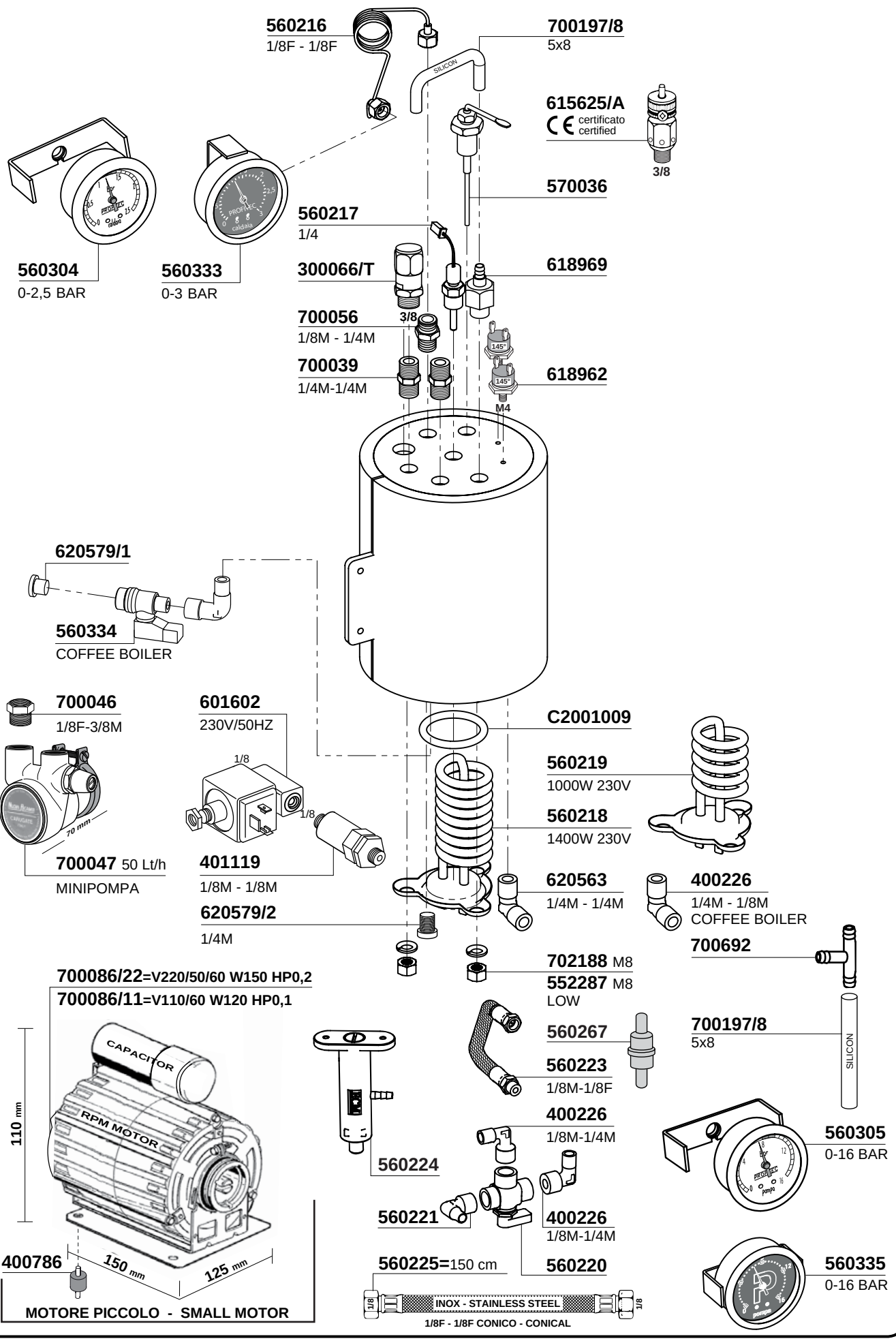
560216
1/8F - 1/8F
700197/8
5x8
SILICON
615625/A
certificato
certified
3/8
570036
560217
1/4
560304
0-2,5 BAR
560333
0-3 BAR
300066/T
618969
3/8
700056
1/8M - 1/4M
700039
1/4M-1/4M
145°
618962
M4
620579/1
560334
COFFEE BOILER
700046
1/8F-3/8M
601602
230V/50HZ
1/8
C2001009
560219
1000W 230V
560218
1400W 230V
70 mm
700047 50 Lt/h
MINIPOMPA
401119
1/8M - 1/8M
620563
1/4M - 1/4M
400226
1/4M - 1/8M
COFFEE BOILER
620579/2
1/4M
700692
702188 M8
552287 M8
LOW
700086/22=V220/50/60 W150 HP0,2
700086/11=V110/60 W120 HP0,1
CAPACITOR
RPM MOTOR
110 mm
560267
700197/8
5x8
SILICON
560223
1/8M-1/8F
400226
1/8M-1/4M
560305
0-16 BAR
560224
560221
400226
1/8M-1/4M
400786
150 mm
125 mm
560225=150 cm
560220
560335
0-16 BAR
INOX - STAINLESS STEEL
1/8F - 1/8F CONICO - CONICAL
MOTORE PICCOLO - SMALL MOTOR

PRO 800

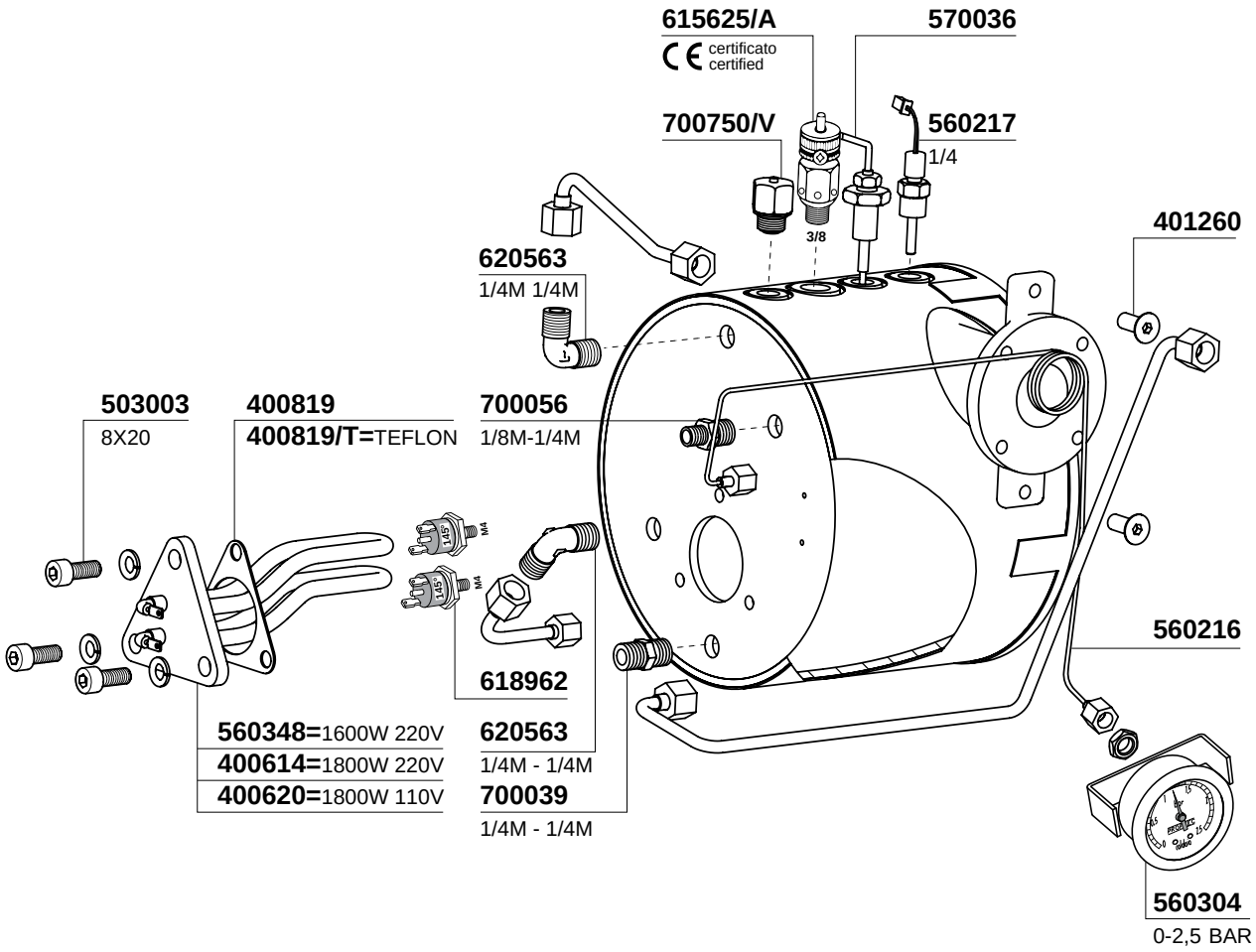
615625/A
certificato
certified
570036
700750/V
560217
1/4
3/8
401260
620563
1/4M 1/4M
503003
8X20
400819
400819/T=TEFLON
700056
1/8M-1/4M
560216
618962
560348=1600W 220V
400614=1800W 220V
400620=1800W 110V
620563
1/4M - 1/4M
700039
1/4M - 1/4M
560304
0-2,5 BAR

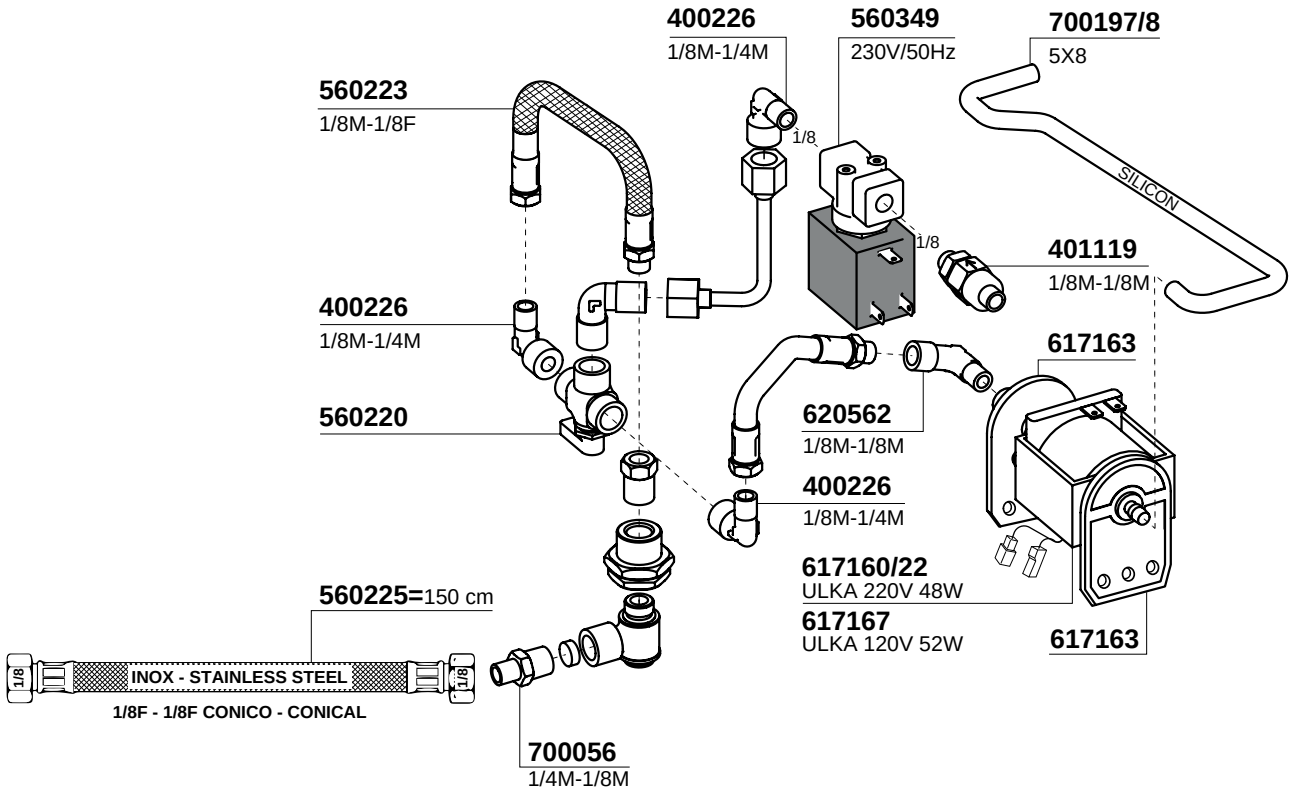
400226
1/8M-1/4M
560349
230V/50Hz
700197/8
5X8
560223
1/8M-1/8F
1/8
SILICON
1/8
401119
1/8M-1/8M
400226
1/8M-1/4M
617163
560220
620562
1/8M-1/8M
400226
1/8M-1/4M
617160/22
ULKA 220V 48W
560225=150 cm
617167
ULKA 120V 52W
617163
INOX - STAINLESS STEEL
1/8F - 1/8F CONICO - CONICAL
700056
1/4M-1/8M

PRO 300 - PRO 500 - PRO 600
PRO 700 - PRO 800

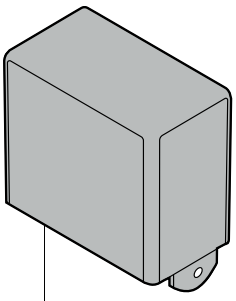

560226= 220V-240V
PRO 600 - PRO 700

560227= 115V
PRO 600 - PRO 700

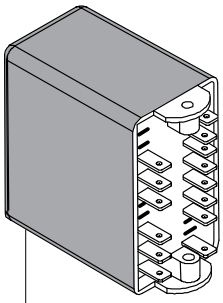

560228= 240V
GICAR CODE 9.9.36.12G
PRO 300 - PRO 500 - PRO 600 - PRO 700

560229= 115V
GICAR CODE 9.9.36.04G
PRO 300 - PRO 500 - PRO 600 - PRO 700

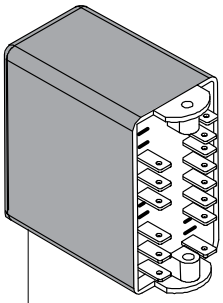

560350= 220V-240V
PRO 800

560351= 115V
PRO 800

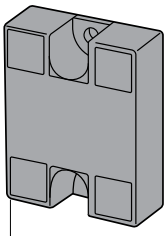

560230
PRO 300 - PRO 700 - PRO 800

560321
PRO 500 - PRO 600

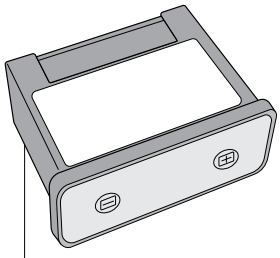

560341
PRO 300 - PRO 800

560322
PRO 500

560328
PRO 600 - PRO 700 UNTIL 09.2018

560336
PRO 700 SINCE 09.2018

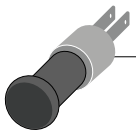

560262 220V
ORANGE
PRO 300

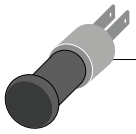

560263 220V
GREEN
PRO 300

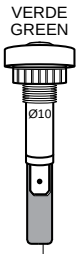

617733 220V
PRO 500 - PRO 600
PRO 700 - PRO 800



617734 220V
PRO 500 - PRO 700
PRO 800

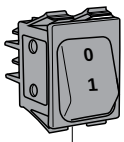

560232
PRO 700 - PRO 800

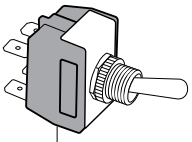

560231
PRO 300 - PRO 500
PRO 600 - PRO 700 - PRO 800

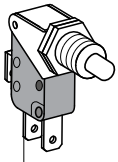

621271
PRO 500 - PRO 600
PRO 700

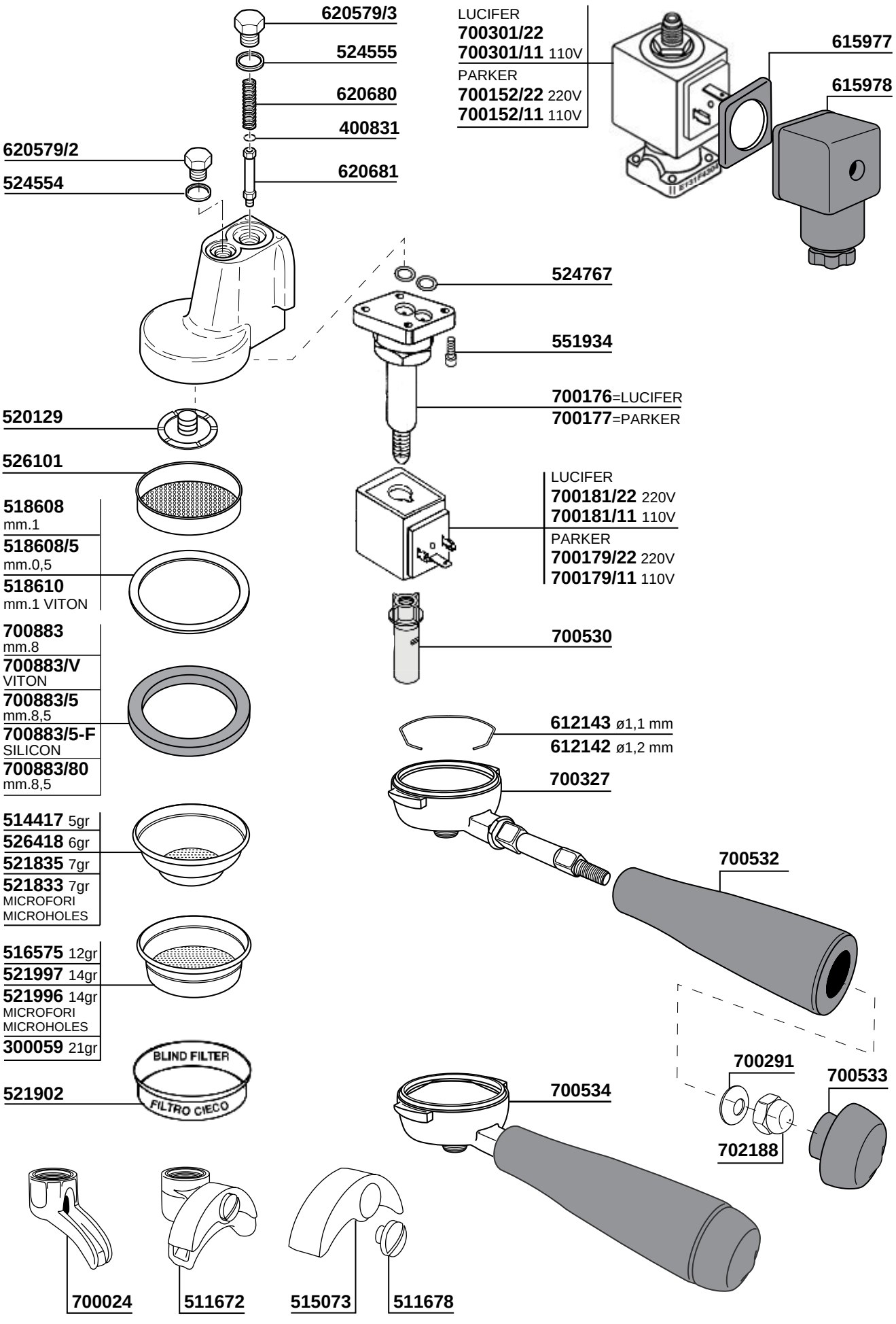
620579/3
524555
620680
400831
620681
620579/2
524554
LUCIFER
700301/22
700301/11 110V
PARKER
700152/22 220V
700152/11 110V
615977
615978
524767
551934
700176=LUCIFER
700177=PARKER
520129
526101
518608
mm.1
518608/5
mm.0,5
518610
mm.1 VITON
700883
mm.8
700883/V
VITON
700883/5
mm.8,5
700883/5-F
SILICON
700883/80
mm.8,5
LUCIFER
700181/22 220V
700181/11 110V
PARKER
700179/22 220V
700179/11 110V
700530
612143 ø1,1 mm
612142 ø1,2 mm
700327
700532
514417 5gr
526418 6gr
521835 7gr
521833 7gr
MICROFORI
MICROHOLES
516575 12gr
521997 14gr
521996 14gr
MICROFORI
MICROHOLES
300059 21gr
521902
BLIND FILTER
FILTRO CIECO
700291
700533
702188
700534
700024
511672
515073
511678

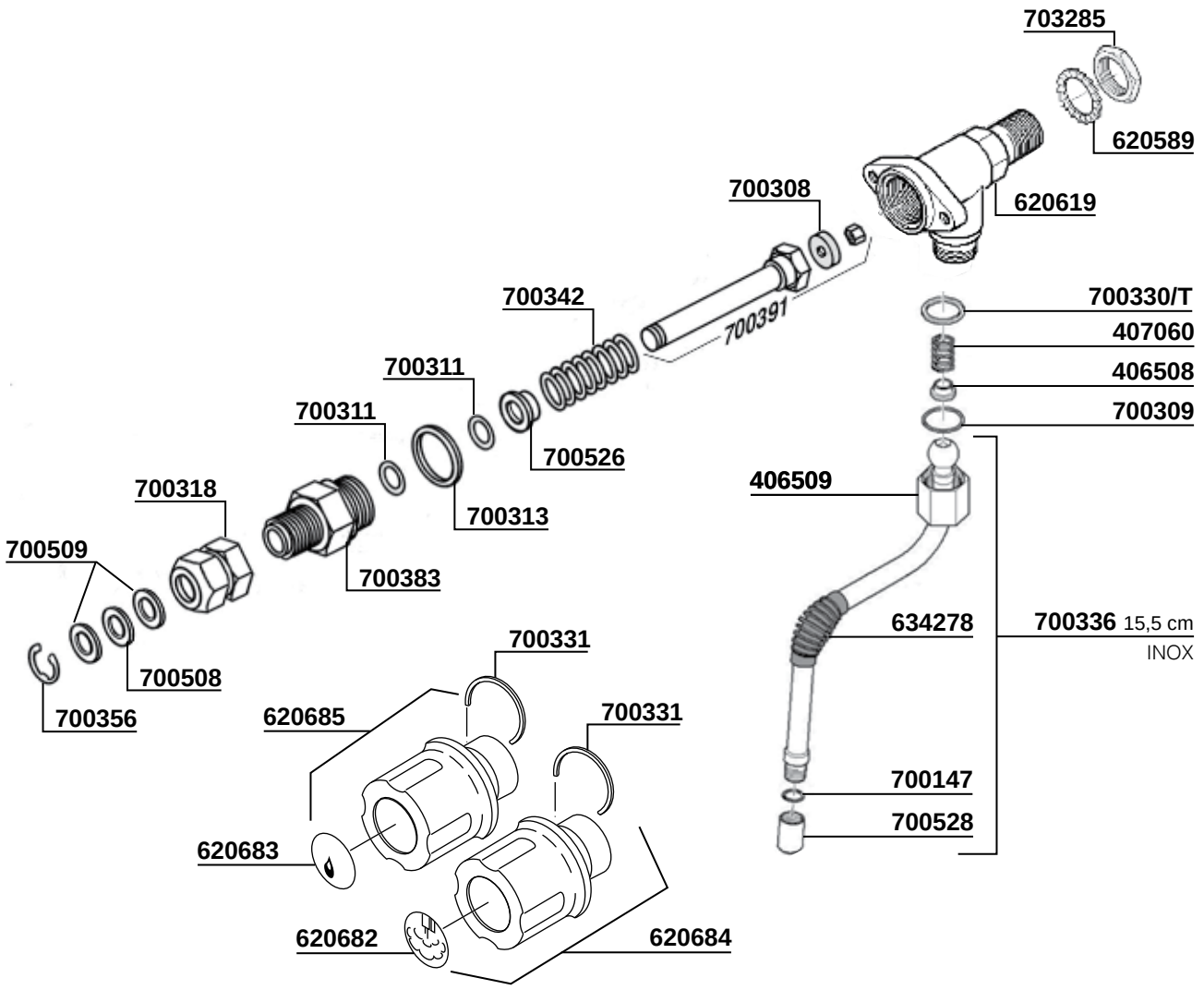
703285
620589
620619
700308
700391
700342
700311
700311
700526
700313
700318
700383
700509
700508
700356
700330/T
407060
406508
700309
406509
634278
700336 15,5 cm
INOX
700147
700528
700331
620685
700331
620683
620682
620684

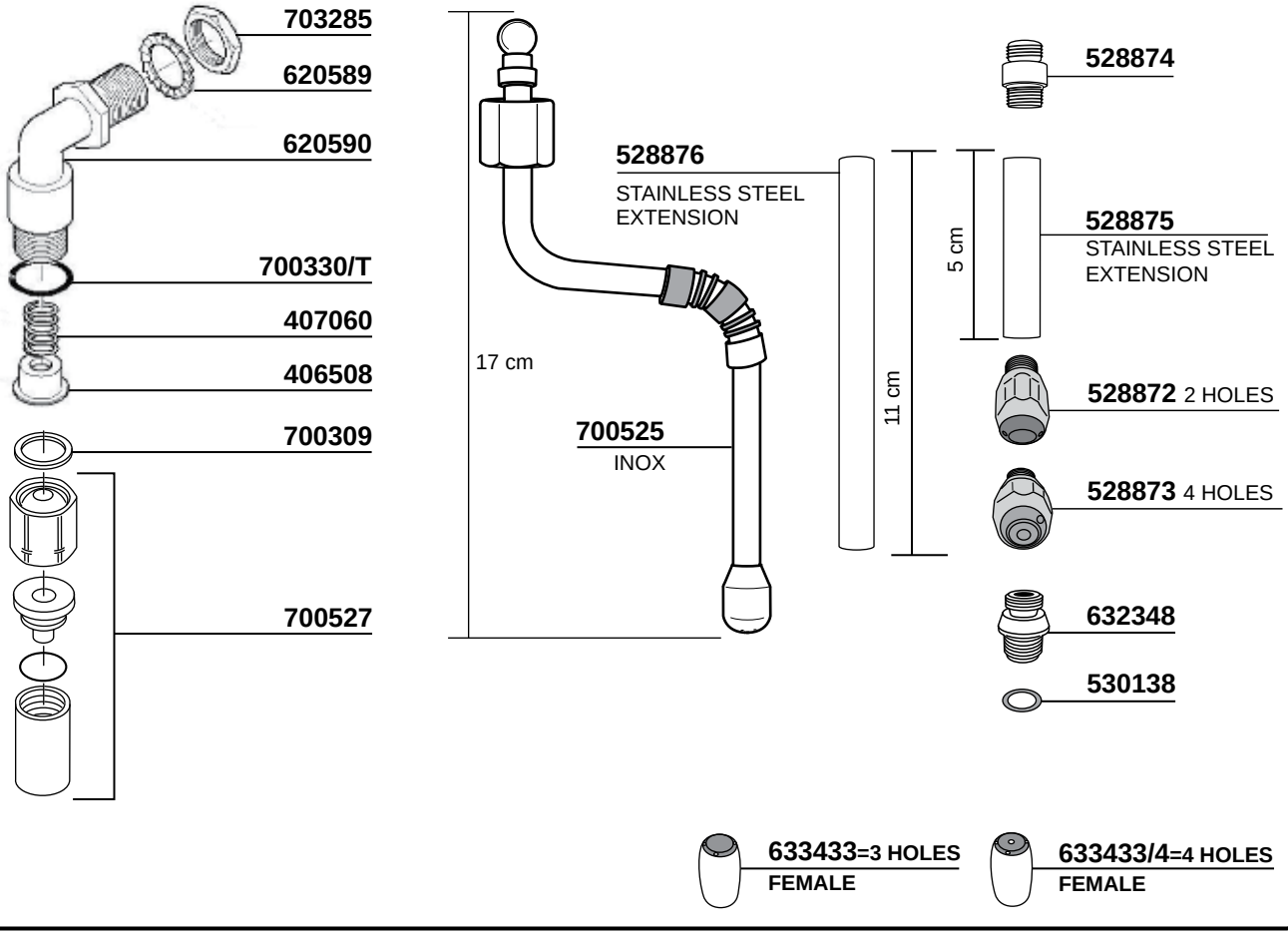
703285
620589
620590
700330/T
407060
406508
700309
700527
17 cm
528876
STAINLESS STEEL
EXTENSION
700525
INOX
11 cm
5 cm
528874
528875
STAINLESS STEEL
EXTENSION
528872 2 HOLES
528873 4 HOLES
632348
530138
633433=3 HOLES
FEMALE
633433/4=4 HOLES
FEMALE

250

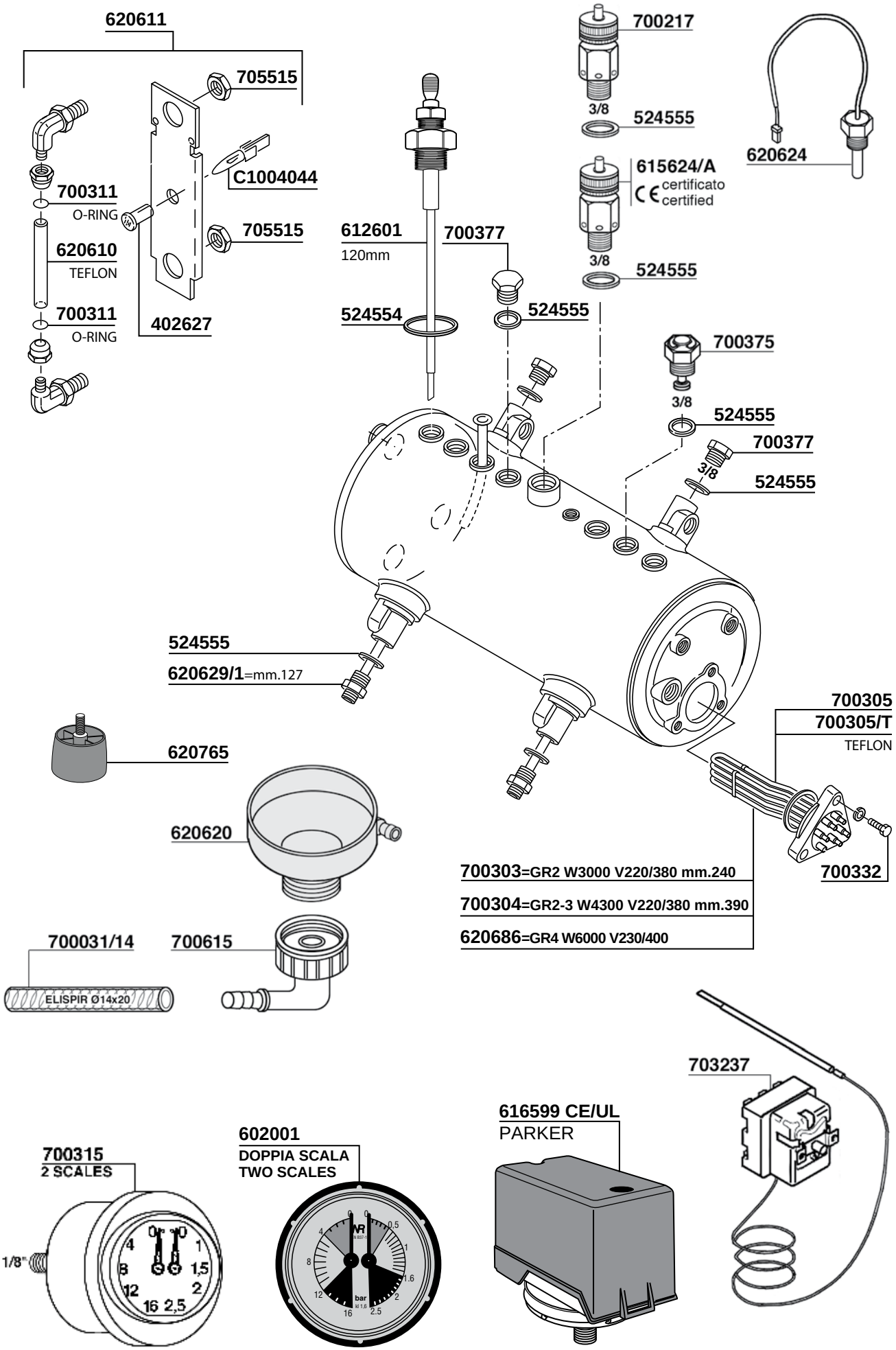
620611
705515
C1004044
700311
O-RING
705515
620610
TEFLON
700311
O-RING
402627
612601
120mm
700377
524554
524555
700217
3/8
524555
615624/A
certificato
certified
3/8
524555
620624
700375
3/8
524555
700377
3/8
524555
524555
620629/1=mm.127
620765
620620
700305
700305/T
TEFLON
700332
700303=GR2 W3000 V220/380 mm.240
700304=GR2-3 W4300 V220/380 mm.390
620686=GR4 W6000 V230/400
700031/14
ELISPIR Ø14x20
700615
703237
616599 CE/UL
PARKER
602001
DOPPIA SCALA
TWO SCALES
700315
2 SCALES
1/8"
bar

524555
620625
620626
620628
EXPANSION VALVE
524555
524555
400835
700511
700510

524555
620625
620626
620628
EXPANSION VALVE
524555
400835
524555
700510
700511

617902
617903/G
530148

700357= 230V - 50/60Hz
700357/11= 120V - 60Hz

700181/22=V220
700181/11=V110
700181/24=V24
BOBINA-COIL
700668 =V220
700668/11 =V110
700668/24=V24
LUCIFER
E121C13
700670
PARTE MECCANICA
SOLENOID VALVE BODY
1/8

551937
300038

300038/C

700084/22
V220/50/60 W165 HP0,2 WITH CABLE

621347
CAPACITOR
CONDENSAT.
10 µF

620679

700054

185 mm
CAPACITOR
RPM MOTOR
165 mm
130 mm

621347=10µF V220
700154/22=V220/50 W165 HP0,2
170x165x185 mm
185 mm
CAPACITOR
RPM MOTOR
700050
700055=100Lt/h
NUOVA RICAMBI
170 mm
165 mm
700032/22=V220/50 W165 HP0,2

621111
6,3µF V220
CAPACITOR
170 mm
RPM MOTOR
200 mm
126 mm
700095
V220/230-240 W300 HP0,4

252

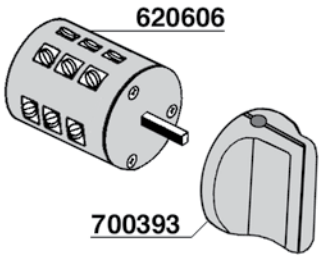

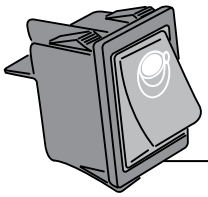

620687

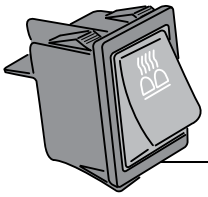

620688

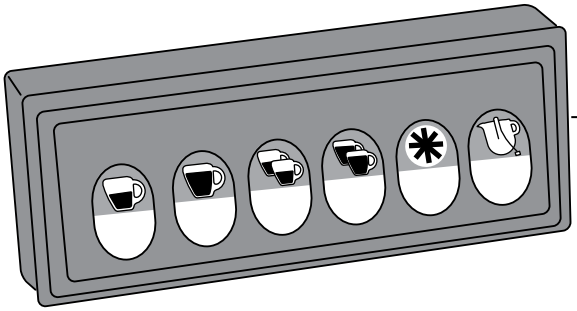

620689
GICAR CODE 9.9.08.91.G



620690
GICAR CODE 9.5.13.59.G

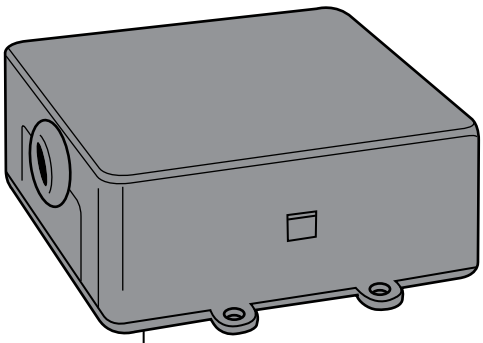

620691 GR1/2/3 230V
GICAR CODE 9.5.25.49.G

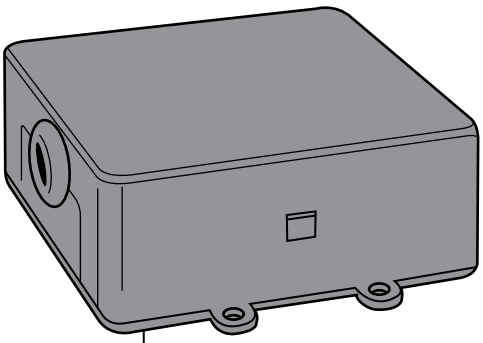

620693 GR2/3 230V PROMAC PLUS
GICAR CODE 9.5.25.29.G

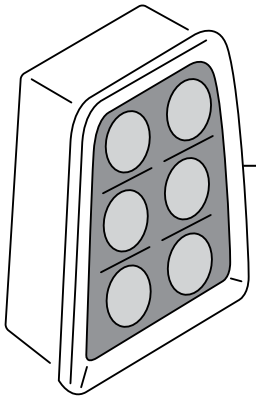

620694
GICAR CODE 9.9.18.36.G

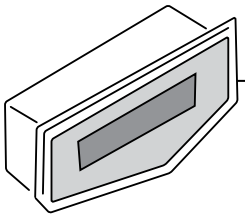

620695
GICAR CODE 9.5.31.67.G

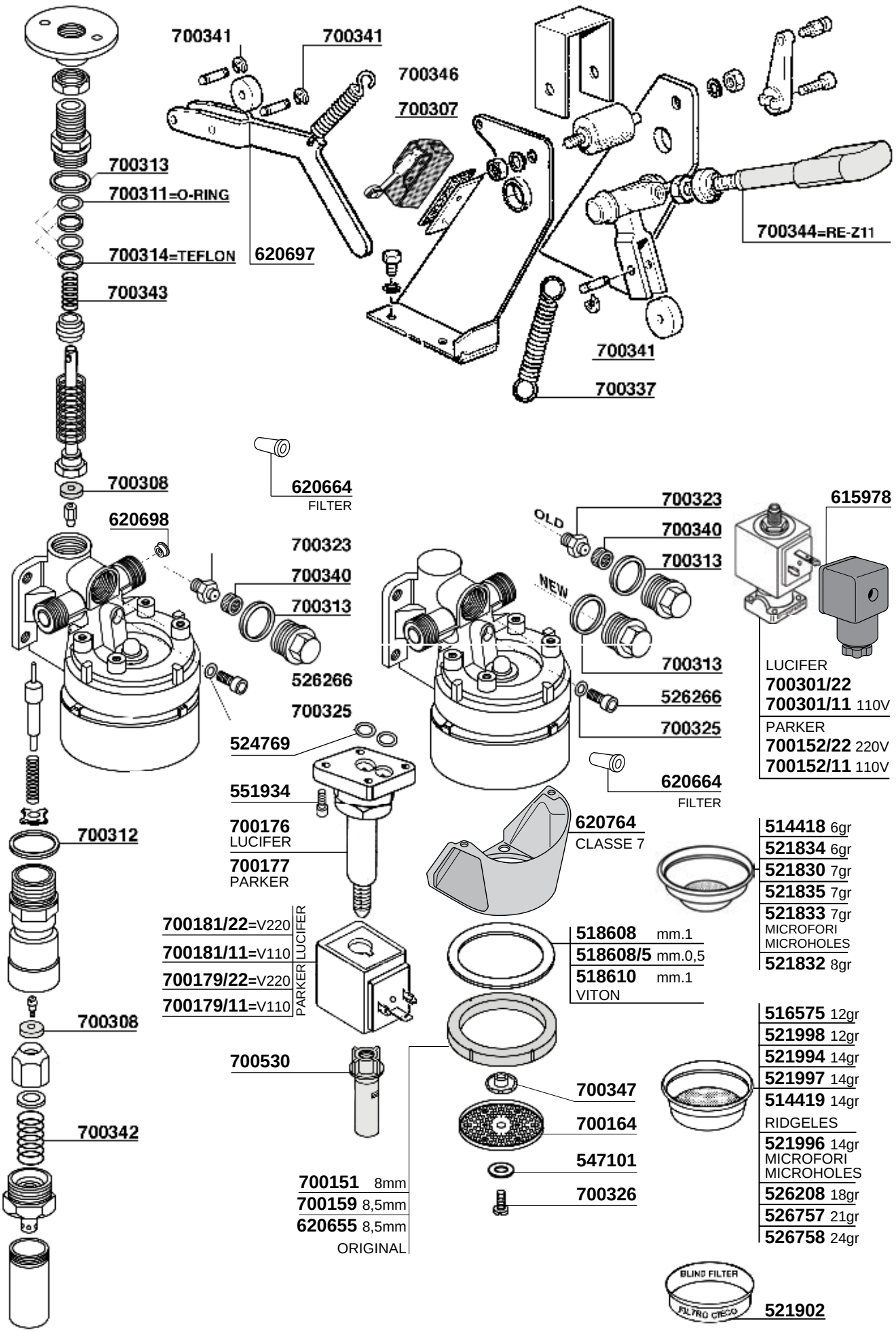
700341
700341
700346
700307
700313
700311=O-RING
700314=TEFLON
620697
700343
700344=RE-Z11
700341
700337
700308
620664
FILTER
620698
700323
700340
700313
526266
700325
524769
551934
700176
LUCIFER
700177
PARKER
700312
700181/22=V220
700181/11=V110
700179/22=V220
700179/11=V110
LUCIFER
PARKER
700308
700530
700342
OLD
NEW
700323
700340
700313
700313
526266
700325
620664
FILTER
615978
LUCIFER
700301/22
700301/11 110V
PARKER
700152/22 220V
700152/11 110V
620764
CLASSE 7
514418 6gr
521834 6gr
521830 7gr
521835 7gr
521833 7gr
MICROFORI
MICROHOLES
521832 8gr
518608 mm.1
518608/5 mm.0,5
518610 mm.1
VITON
516575 12gr
521998 12gr
521994 14gr
521997 14gr
514419 14gr
RIDGELES
521996 14gr
MICROFORI
MICROHOLES
526208 18gr
526757 21gr
526758 24gr
700347
700164
547101
700326
700151 8mm
700159 8,5mm
620655 8,5mm
ORIGINAL
BLIND FILTER
FILTRO CIECO
521902

RANCILIO

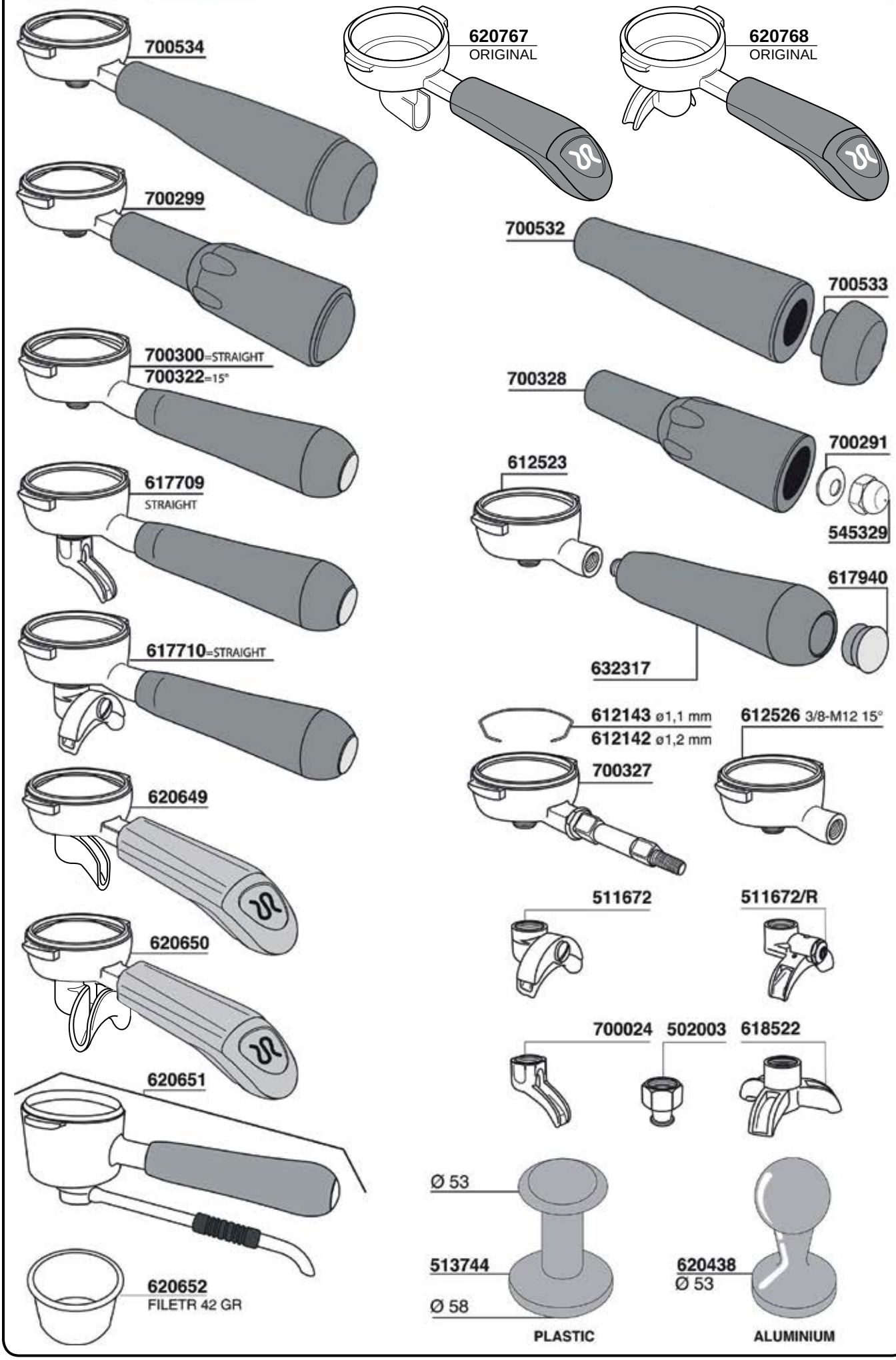
700534
620767
ORIGINAL
620768
ORIGINAL
700299
700532
700533
700300=STRAIGHT
700322=15°
700328
700291
612523
545329
617709
STRAIGHT
617940
617710=STRAIGHT
632317
612143 ø1,1 mm
612142 ø1,2 mm
612526 3/8-M12 15°
700327
620649
511672
511672/R
620650
700024
502003
618522
620651
Ø 53
513744
Ø 58
620438
Ø 53
620652
FILETR 42 GR
PLASTIC
ALUMINIUM

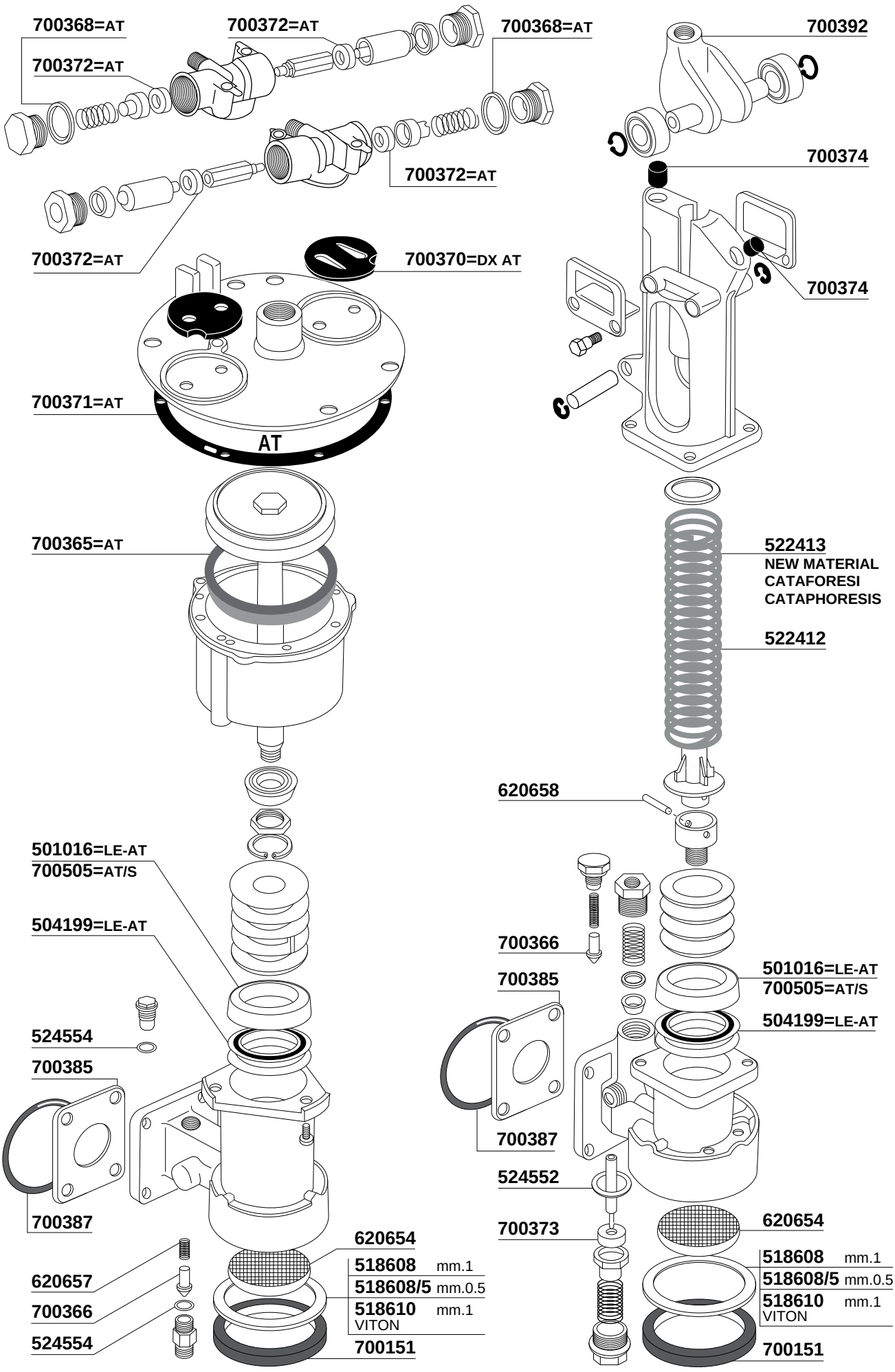
700368=AT
700372=AT
700372=AT
700368=AT
700372=AT
700372=AT
700370=DX AT
700371=AT
AT
700365=AT
501016=LE-AT
700505=AT/S
504199=LE-AT
524554
700385
700387
620657
700366
524554
620654
518608 mm.1
518608/5 mm.0.5
518610 mm.1
VITON
700151
700392
700374
700374
522413
NEW MATERIAL
CATAFORESI
CATAPHORESIS
522412
620658
700366
700385
501016=LE-AT
700505=AT/S
504199=LE-AT
700387
524552
700373
620654
518608 mm.1
518608/5 mm.0.5
518610 mm.1
VITON
700151

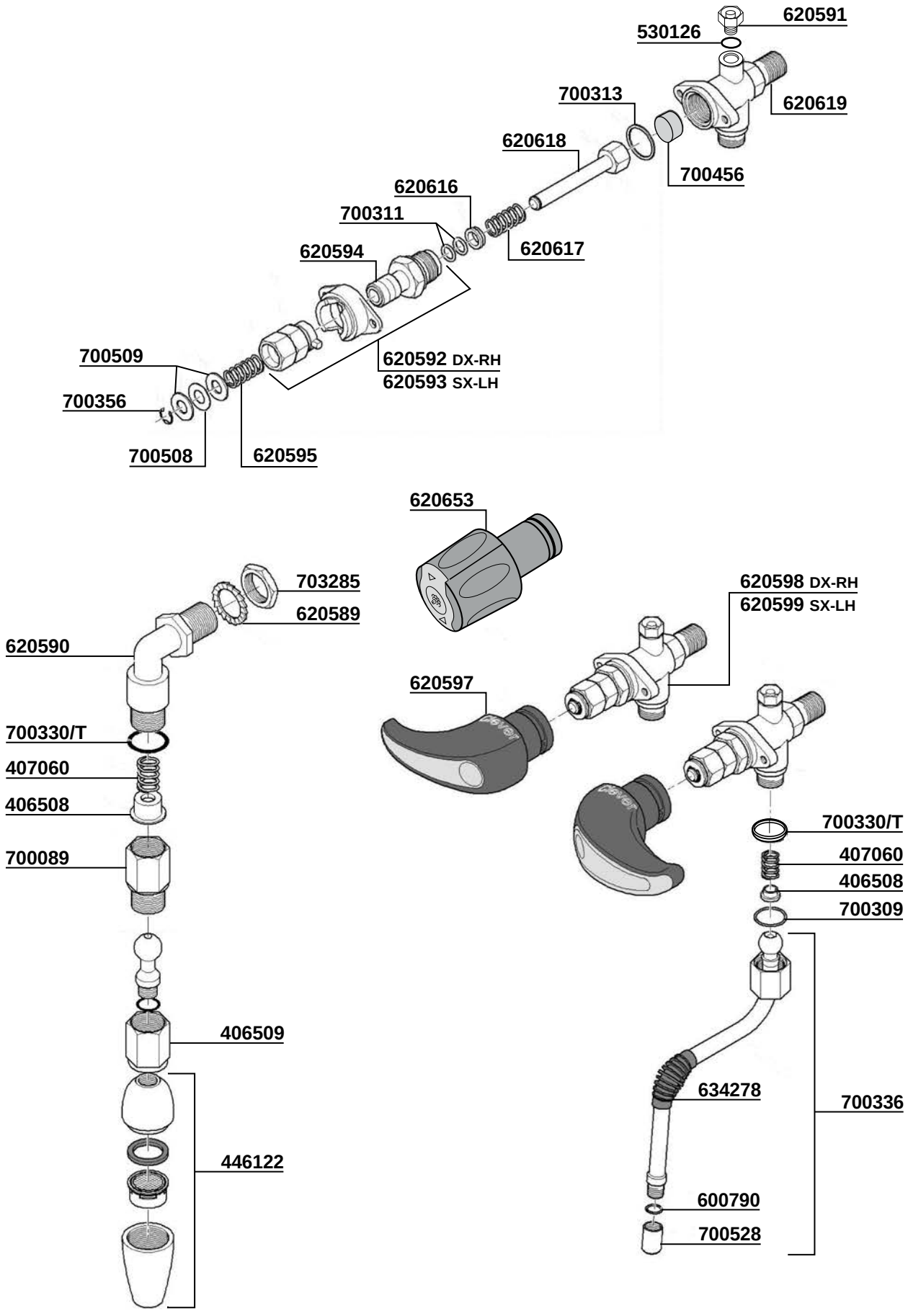
620591
530126
700313
620619
620618
700456
620616
700311
620617
620594
620592 DX-RH
620593 SX-LH
700509
700356
700508
620595
620653
703285
620589
620590
620598 DX-RH
620599 SX-LH
620597
700330/T
407060
406508
700089
700330/T
407060
406508
700309
406509
634278
700336
600790
700528
446122

RANCILIO

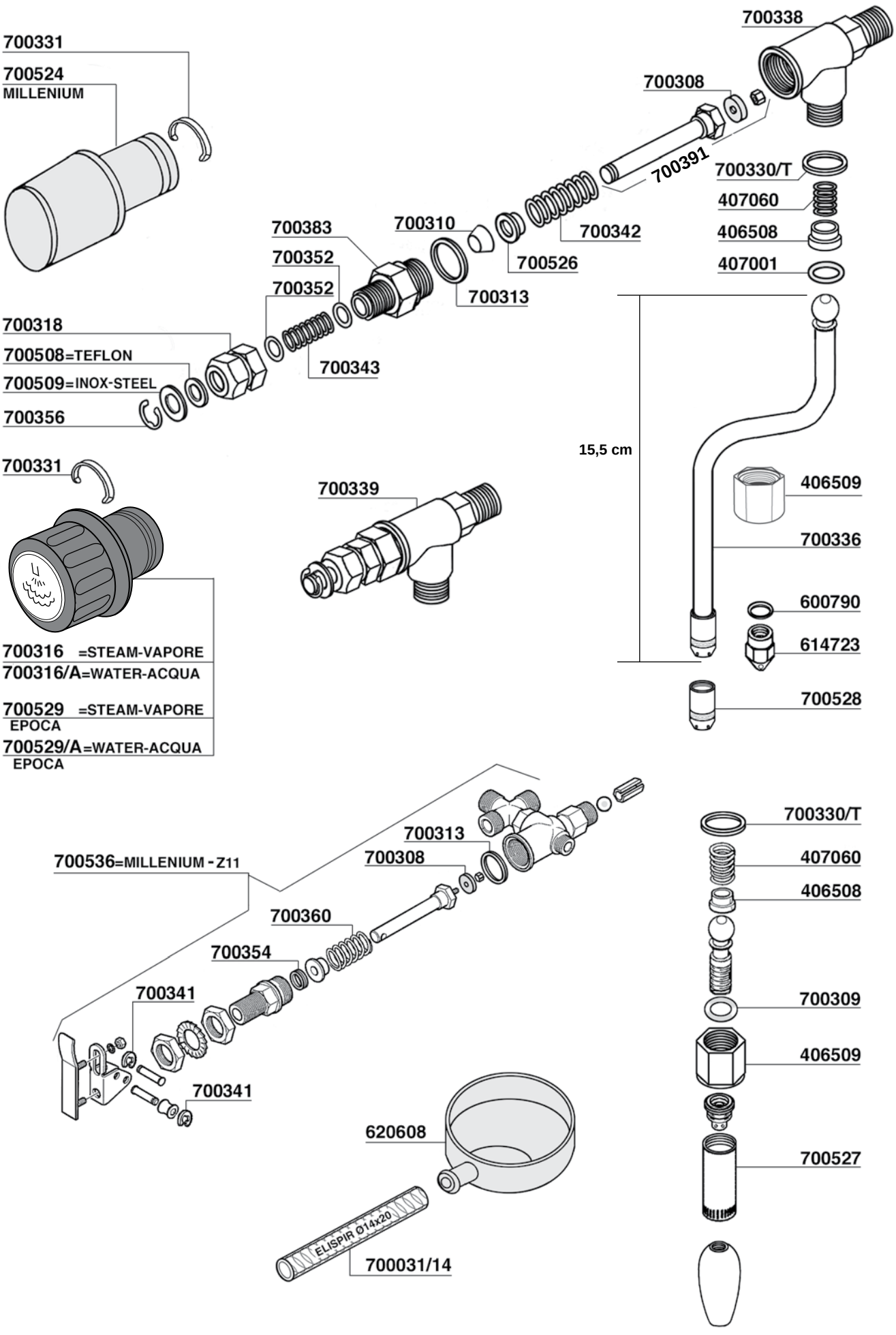
700331
700524
MILLENIUM
700338
700308
700391
700330/T
407060
406508
407001
700383
700352
700352
700310
700313
700342
700526
700318
700508=TEFLON
700509=INOX-STEEL
700356
700343
15,5 cm
406509
700336
600790
614723
700528
700331
700316 =STEAM-VAPORE
700316/A=WATER-ACQUA
700529 =STEAM-VAPORE
EPOCA
700529/A=WATER-ACQUA
EPOCA
700339
700536=MILLENIUM - Z11
700313
700308
700360
700354
700341
700341
620608
ELISPIR Ø14x20
700031/14
700330/T
407060
406508
700309
406509
700527

RANCILIO

CLASSE 10

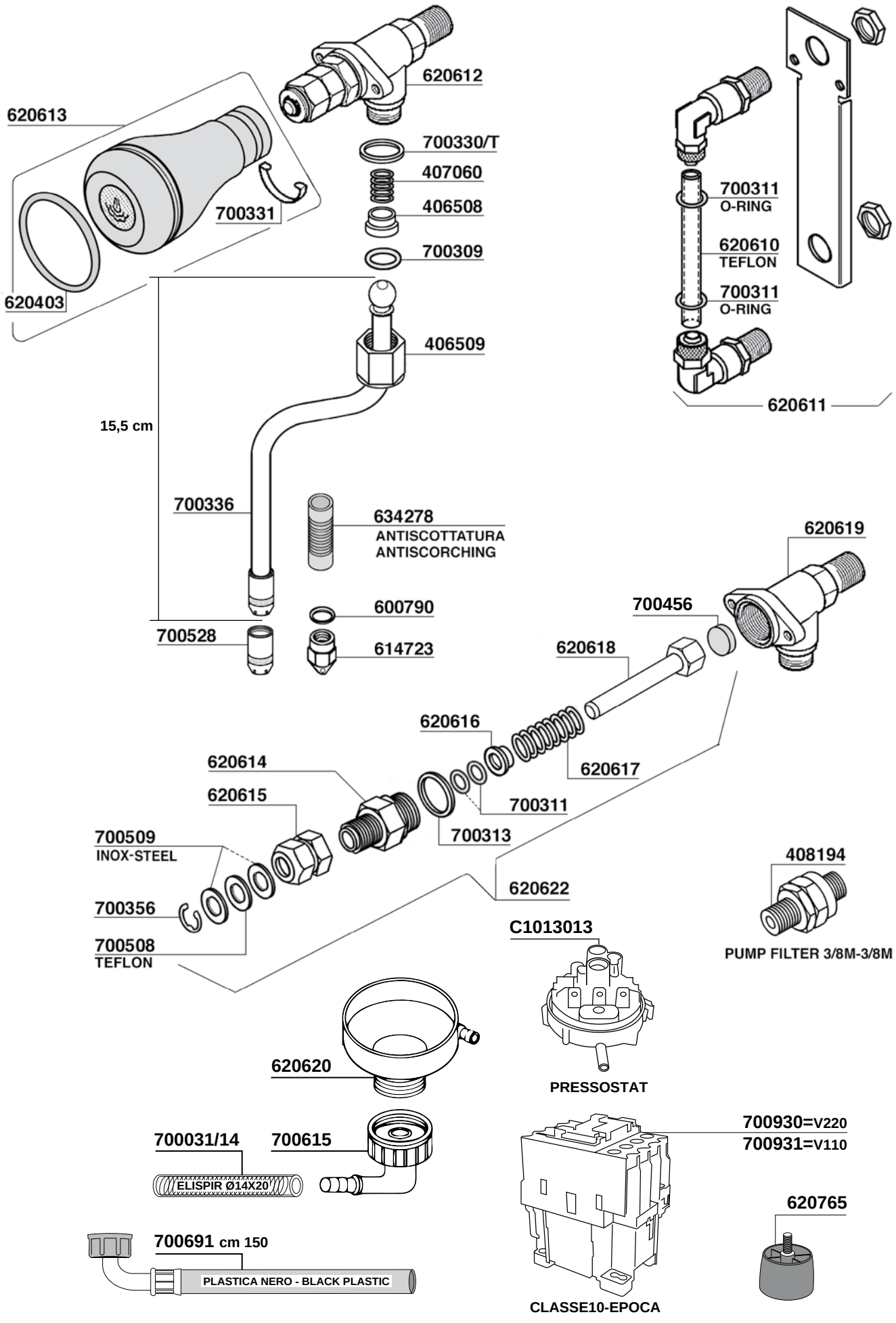

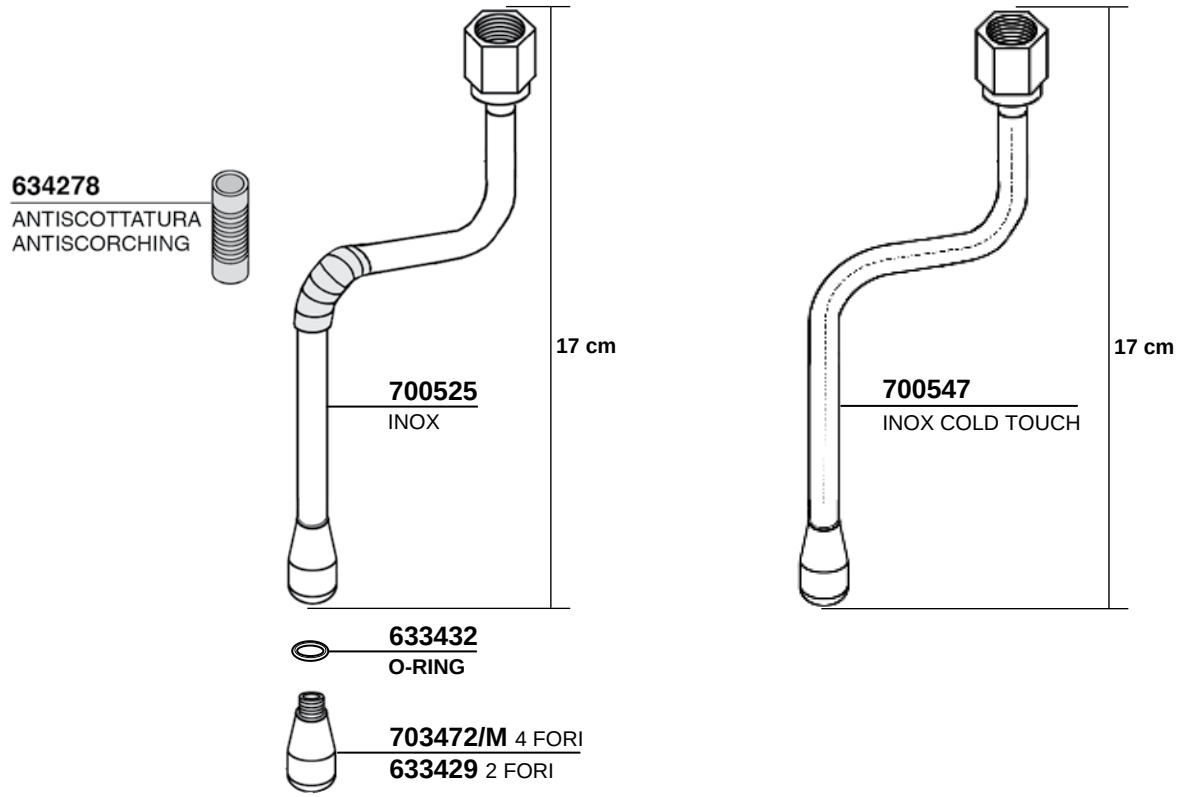
634278
ANTISCOTTATURA
ANTISCORCHING
17 cm
700525
INOX
17 cm
700547
INOX COLD TOUCH
633432
O-RING
703472/M 4 FORI
633429 2 FORI

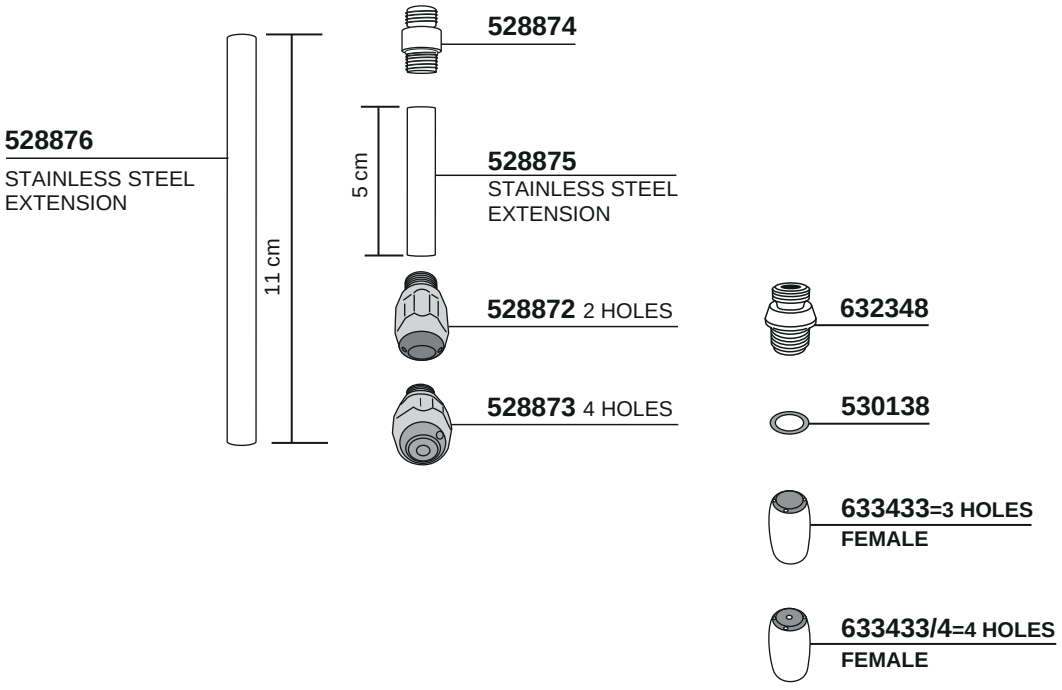
528874
528876
STAINLESS STEEL
EXTENSION
11 cm
5 cm
528875
STAINLESS STEEL
EXTENSION
528872 2 HOLES
528873 4 HOLES
632348
530138
633433=3 HOLES
FEMALE
633433/4=4 HOLES
FEMALE

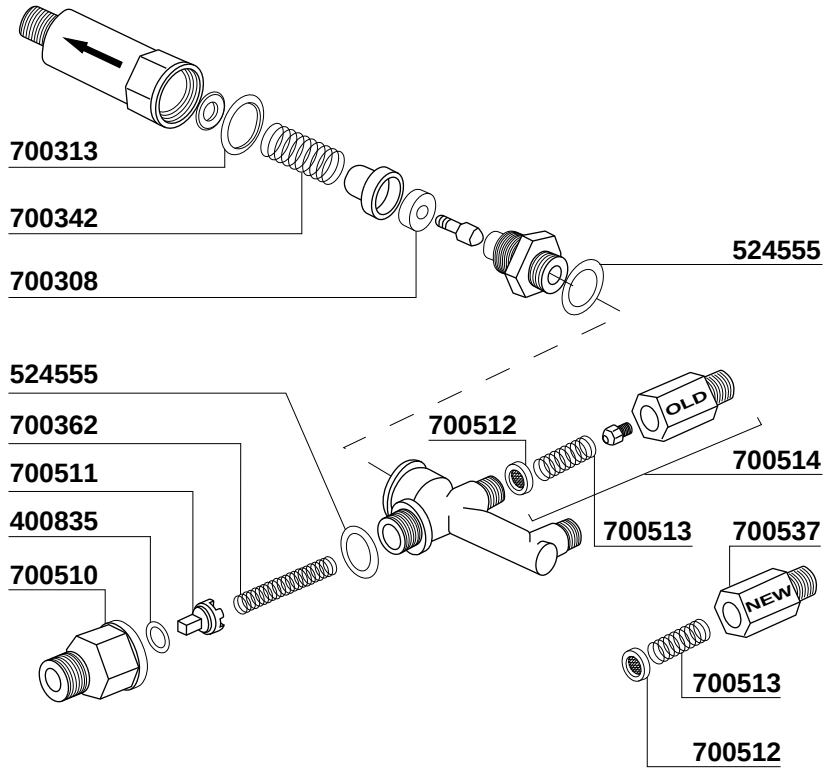
700313
700342
700308
524555
524555
700362
700511
400835
700510
700512
OLD
700514
700513
700537
NEW
700513
700512

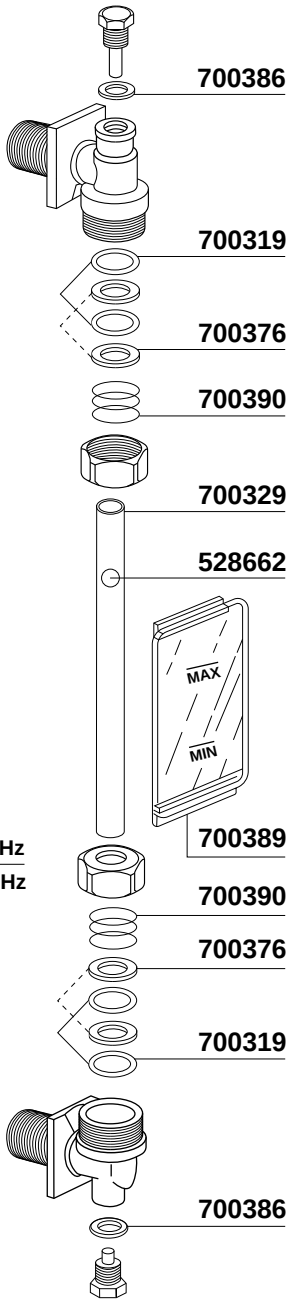
700386
700319
700376
700390
700329
528662
MAX
MIN
700389
700390
700376
700319
700386

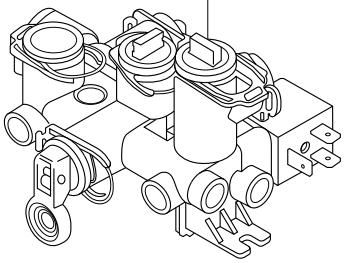
700357= 230V - 50/60Hz
700357/11= 120V- 60Hz

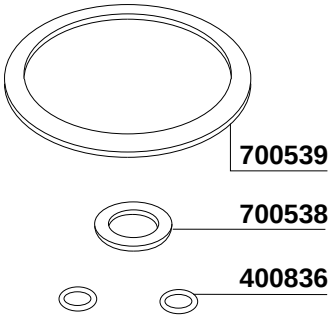
700539
700538
400836

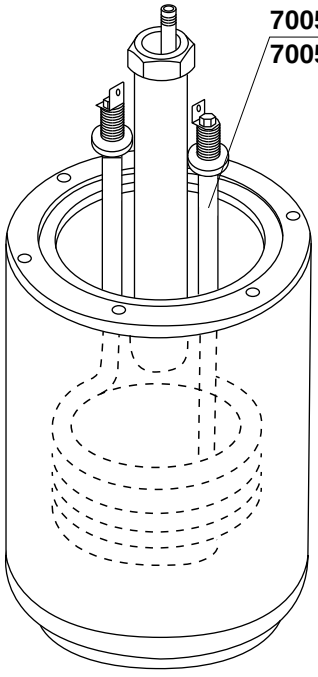
700521= W1600 V220
700521/11= W1200 V110

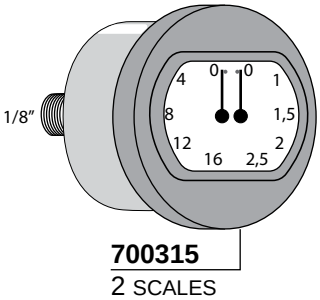
1/8"
700315
2 SCALES

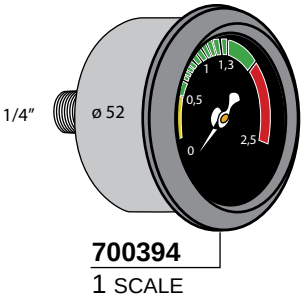
1/4"
ø 52
700394
1 SCALE

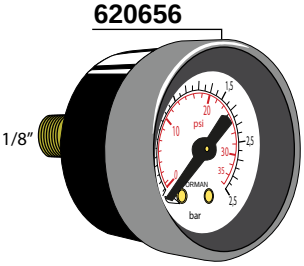
620656
1/8"

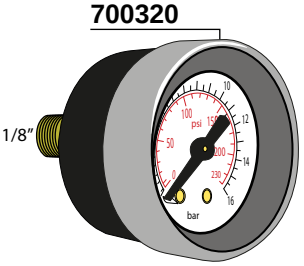
700320
1/8"

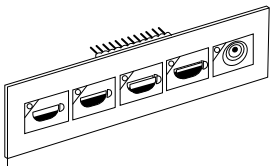

700398/S
Z11 OMICRON-TECNA-S20



700541=CDX

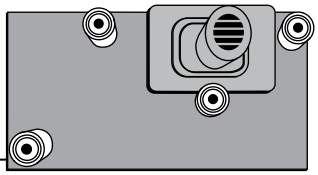

620600/N

620602
EPOCA DE

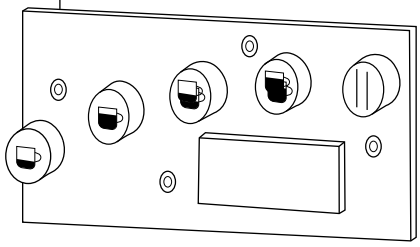

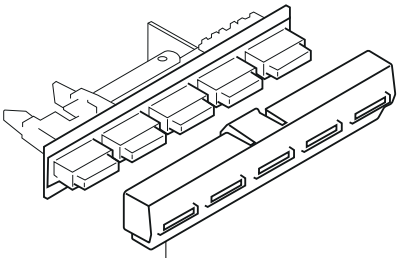

620648

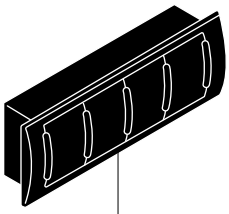

620761
CLASSE 7 - CLASSE 9

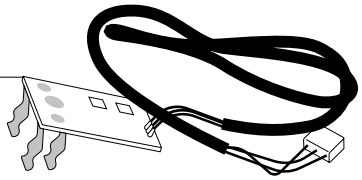

620699

620692
230V

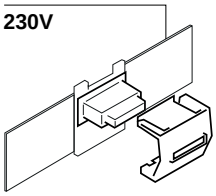

620762
CLASSE 7 USB/16

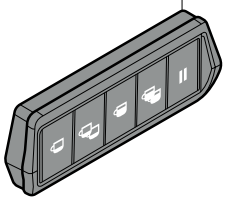

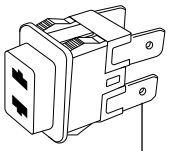

SWITCH 620609

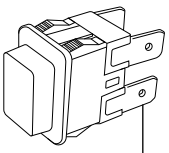

620604= WATER SWITCH MLN/CDX

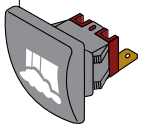

620763
CLASSE 7/16



ORANGE V230 = 620630
2 POLE LUMINOUS SWITCH

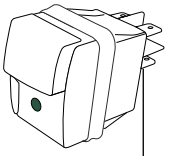

620606

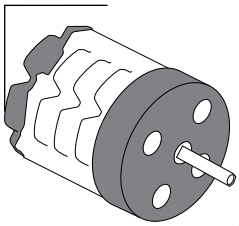

700393

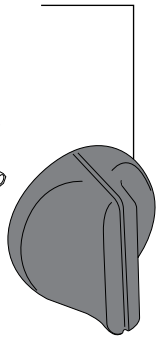

700381

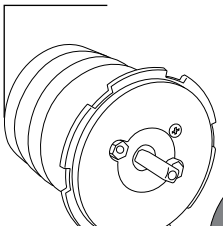

700393

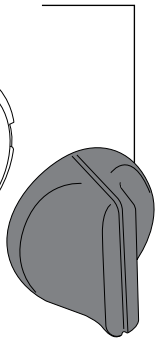

620632
INTERRUPTORE BIP.VERDE
EPOCA

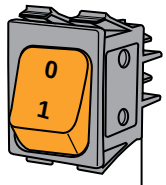

ORANGE 700382

700181/22=V220
700181/11=V110
700181/24=V24
BOBINA-COIL

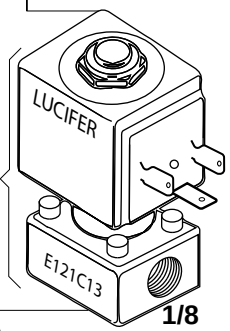

700668 =V220
700668/11 =V110
700668/24 =V24

700670
PARTE MECCANICA
SOLENOID VALVE BODY
1/8

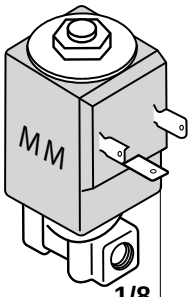

1/8
700253/22=V220
700253/11=V110

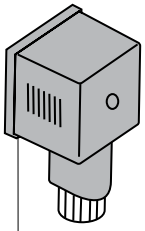

615978/P

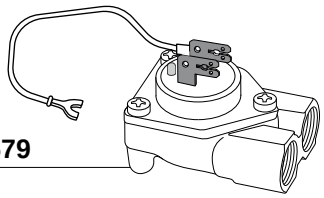

620679

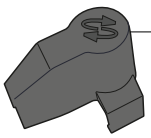

617902

617903/G

530148

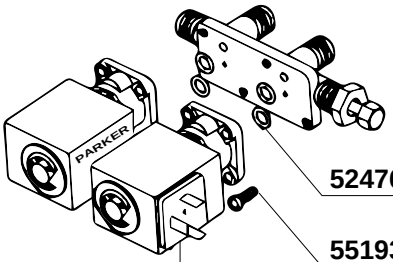

524769
551934
PARKER
634294/22=V220
634294/11=V110

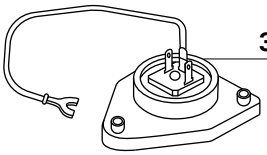

300038/C

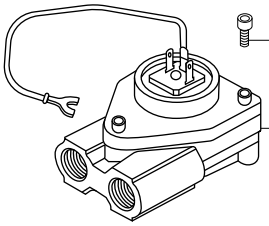

551937
300038

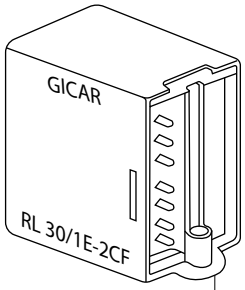

700737 =V220
700737/11=V110

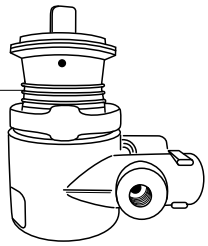

700054

621347
CAPACITOR
CONDENSAT.
10 µF

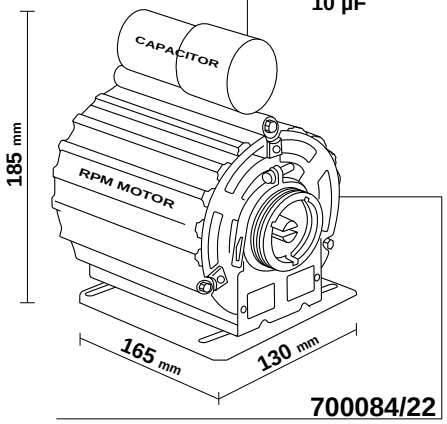

700084/22
V220/50/60 W165 HP0,2 WITH CABLE

621347=10µF V220

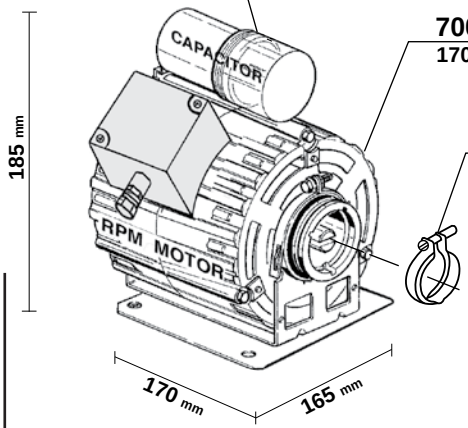

700154/22=V220/50 W165 HP0,2
170x165x185 mm

700050

700055=100Lt/h
NUOVA RICAMBI

700032/22=V220/50 W165 HP0,2

700095
V220/230-240 W300 HP0,4

621111
6,3µF V220

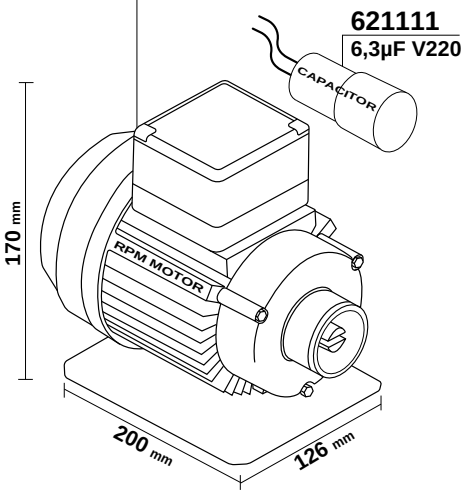

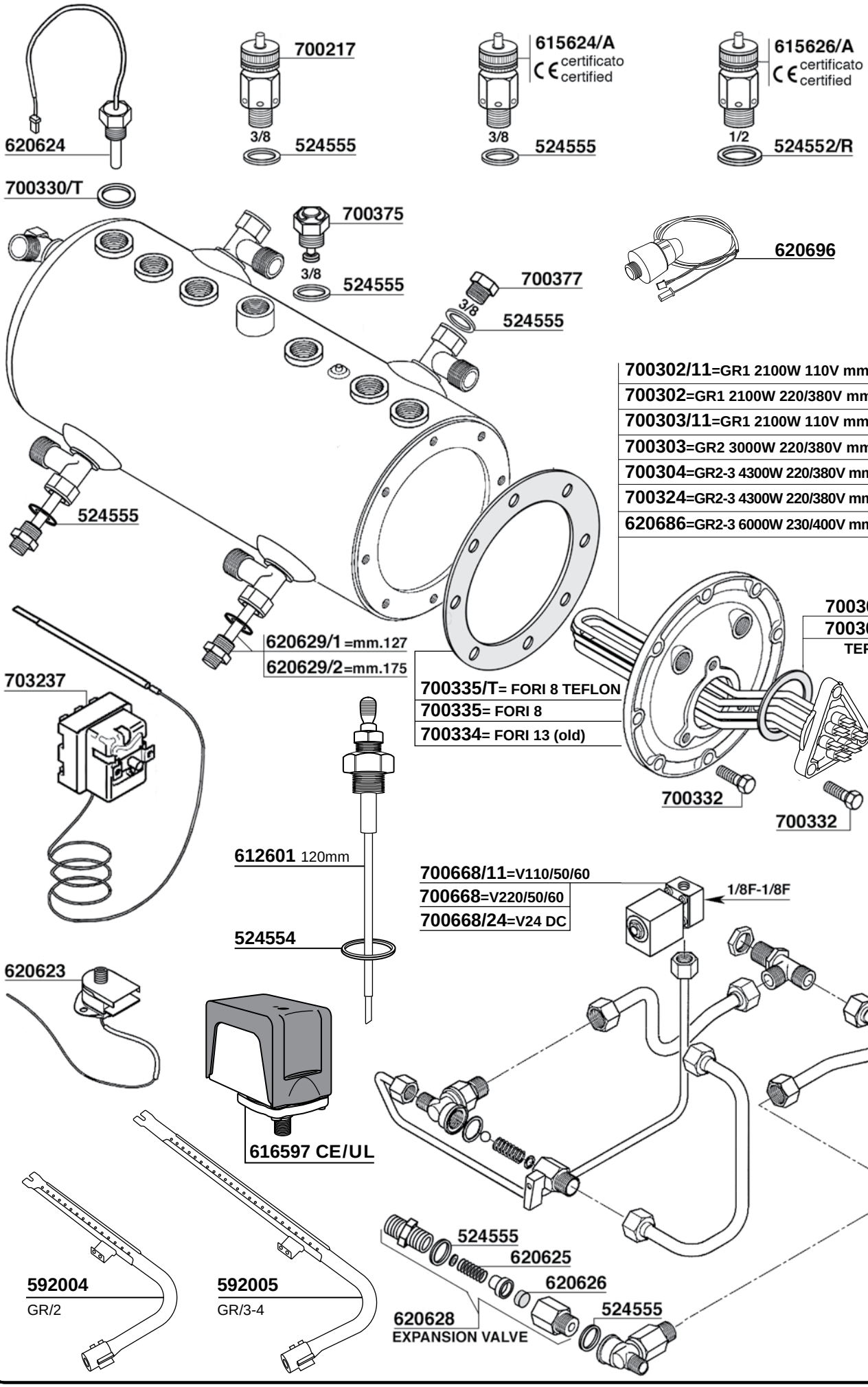
620624
700217
3/8
524555
615624/A
certificato
certified
3/8
524555
615626/A
certificato
certified
1/2
524552/R
700330/T
700375
3/8
524555
700377
3/8
524555
620696
524555
620629/1 =mm.127
620629/2=mm.175
700302/11=GR1 2100W 110V mm.210
700302=GR1 2100W 220/380V mm.210
700303/11=GR1 2100W 110V mm.240
700303=GR2 3000W 220/380V mm.240
700304=GR2-3 4300W 220/380V mm.390
700324=GR2-3 4300W 220/380V mm.400
620686=GR2-3 6000W 230/400V mm.380
700305
700305/T
TEFLON
700335/T= FORI 8 TEFLON
700335= FORI 8
700334= FORI 13 (old)
700332
700332
703237
612601 120mm
524554
700668/11=V110/50/60
700668=V220/50/60
700668/24=V24 DC
1/8F-1/8F
620623
616597 CE/UL
524555
620625
620626
524555
620628
EXPANSION VALVE
592004
GR/2
592005
GR/3-4

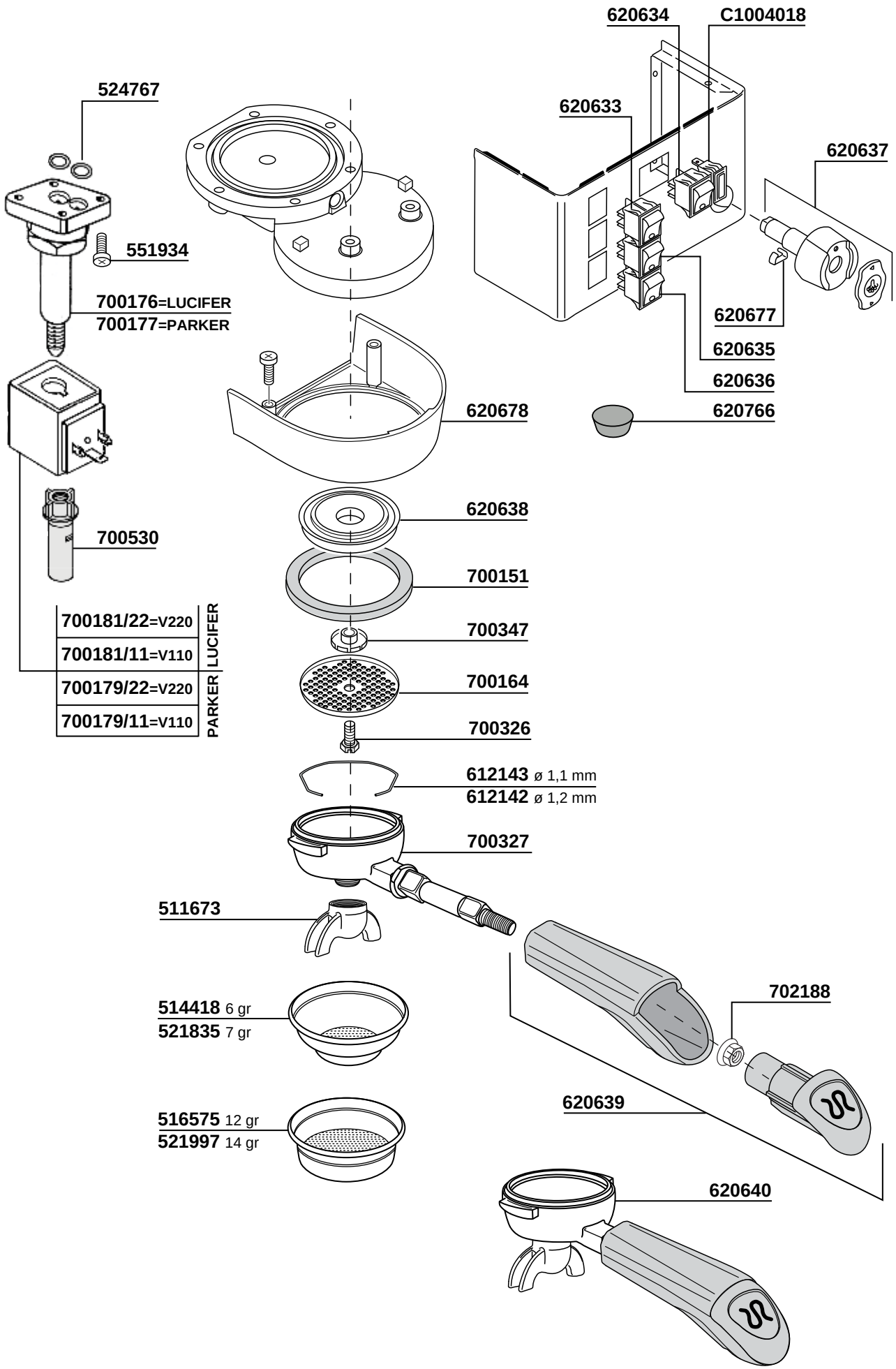
620634
C1004018
524767
620633
620637
551934
700176=LUCIFER
700177=PARKER
620677
620635
620636
620766
620678
620638
700530
700151
700181/22=V220
700181/11=V110
700179/22=V220
700179/11=V110
LUCIFER
PARKER
700347
700164
700326
612143 ø 1,1 mm
612142 ø 1,2 mm
700327
511673
702188
514418 6 gr
521835 7 gr
620639
516575 12 gr
521997 14 gr
620640

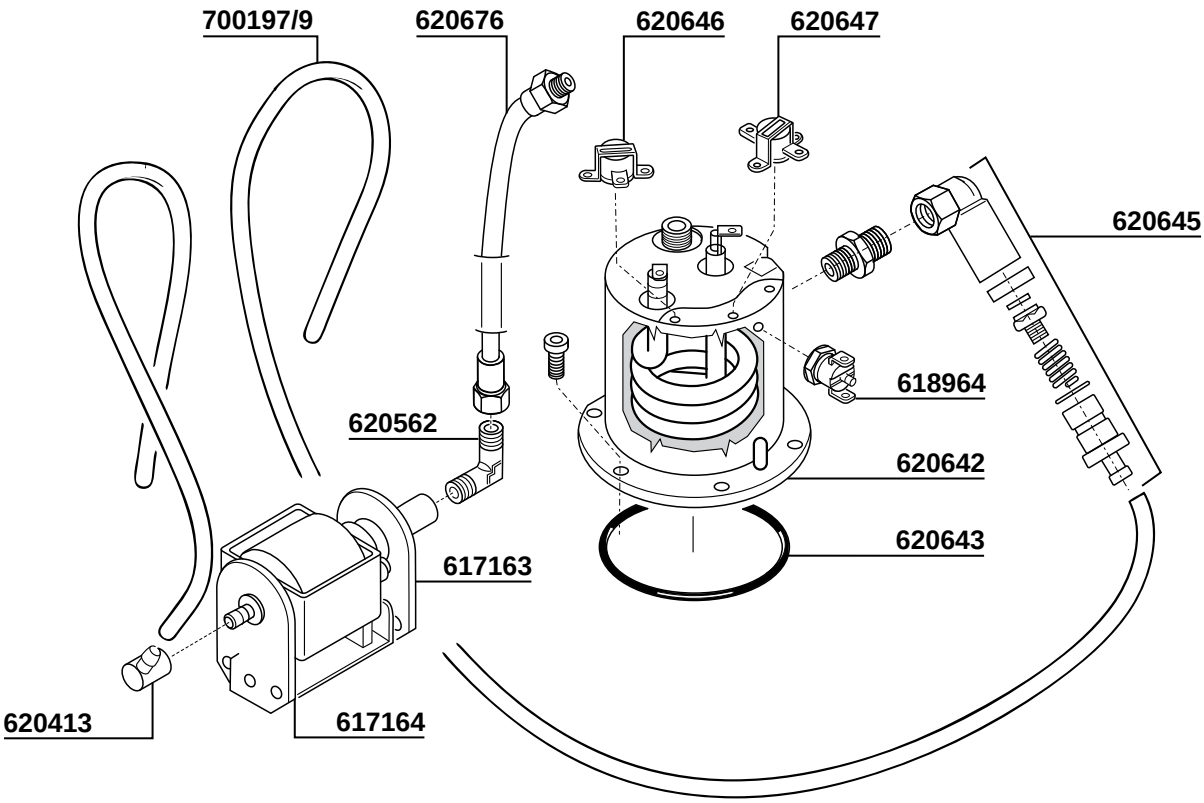
700197/9
620676
620646
620647
620645
618964
620562
620642
620643
617163
620413
617164

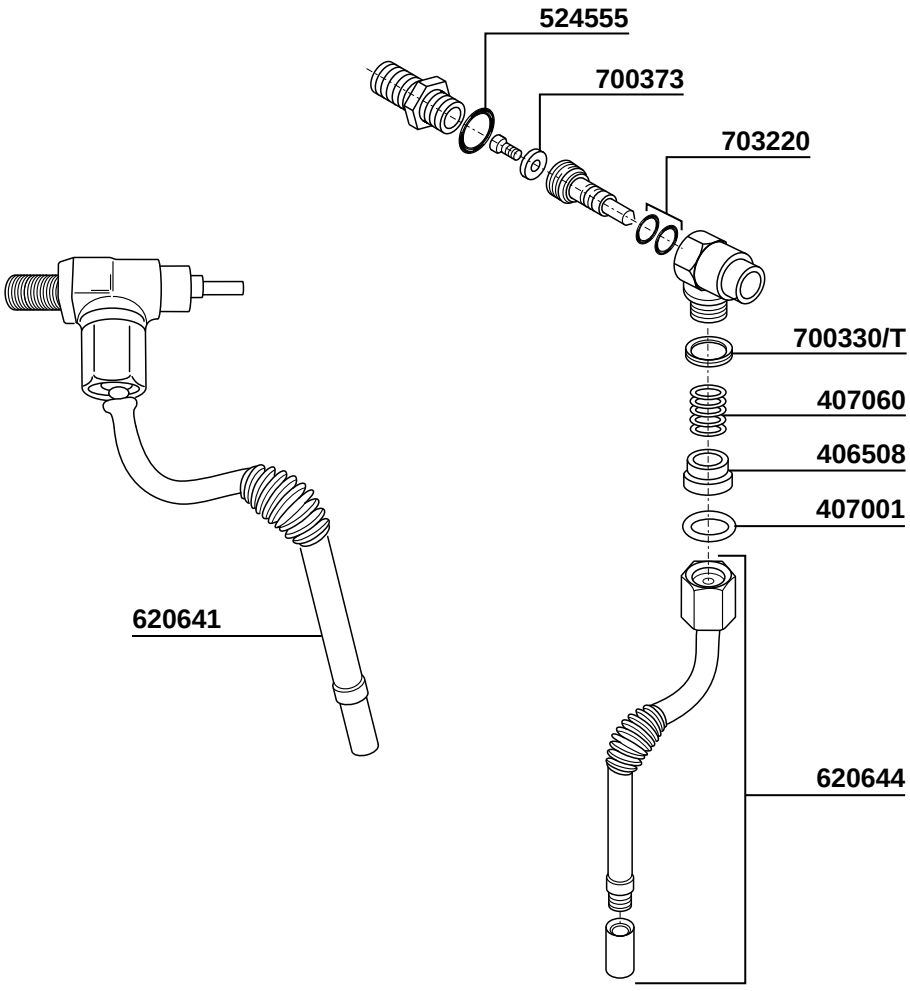
524555
700373
703220
700330/T
407060
406508
407001
620641
620644

SANREMO

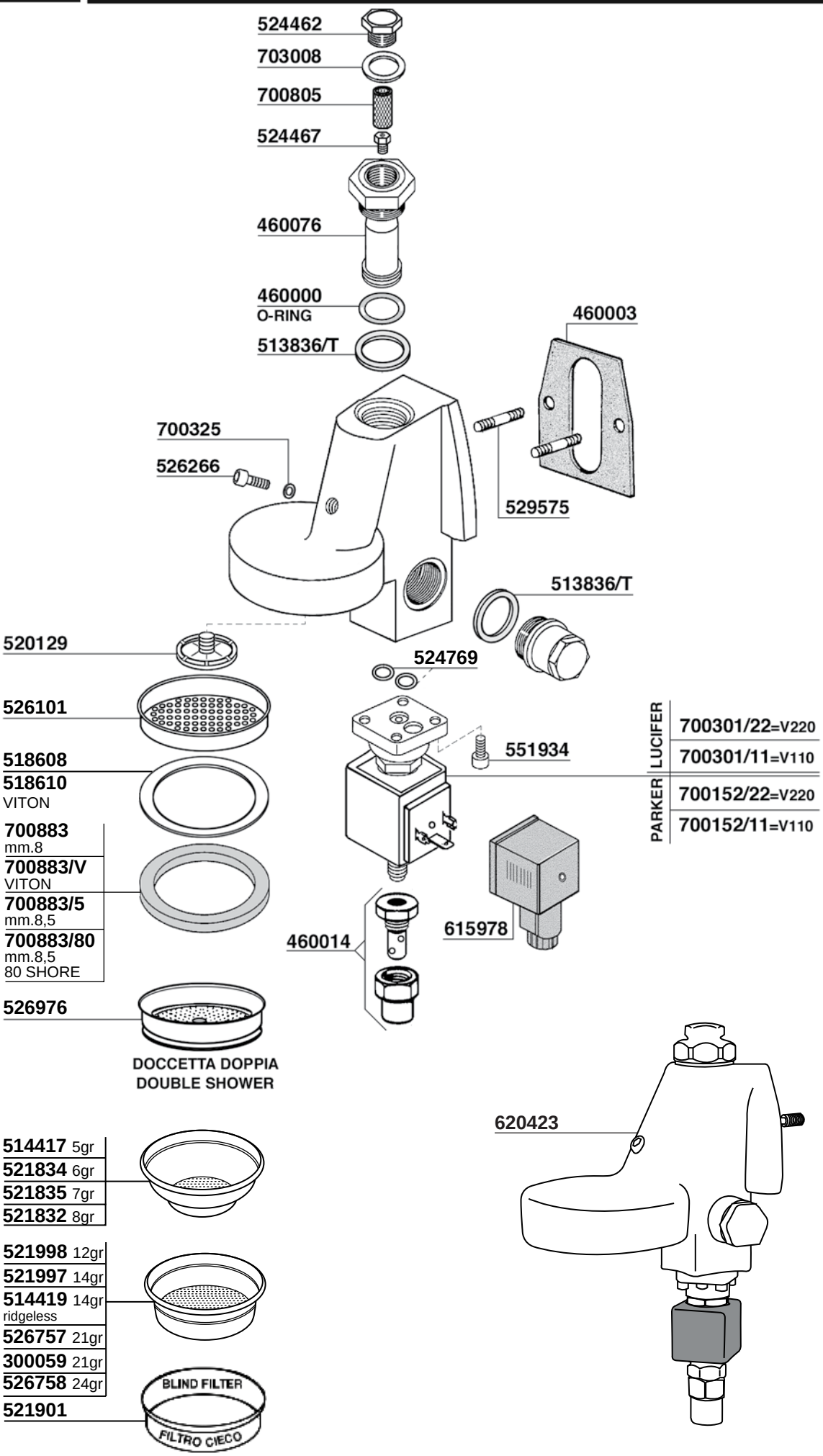
524462
703008
700805
524467
460076
460000
O-RING
513836/T
460003
700325
526266
529575
513836/T
520129
524769
526101
551934
LUCIFER
700301/22=V220
700301/11=V110
PARKER
700152/22=V220
700152/11=V110
518608
518610
VITON
700883
mm.8
700883/V
VITON
700883/5
mm.8,5
700883/80
mm.8,5
80 SHORE
615978
460014
526976
DOCCETTA DOPPIA
DOUBLE SHOWER
620423
514417 5gr
521834 6gr
521835 7gr
521832 8gr
521998 12gr
521997 14gr
514419 14gr
ridgeless
526757 21gr
300059 21gr
526758 24gr
521901
BLIND FILTER
FILTRO CIECO

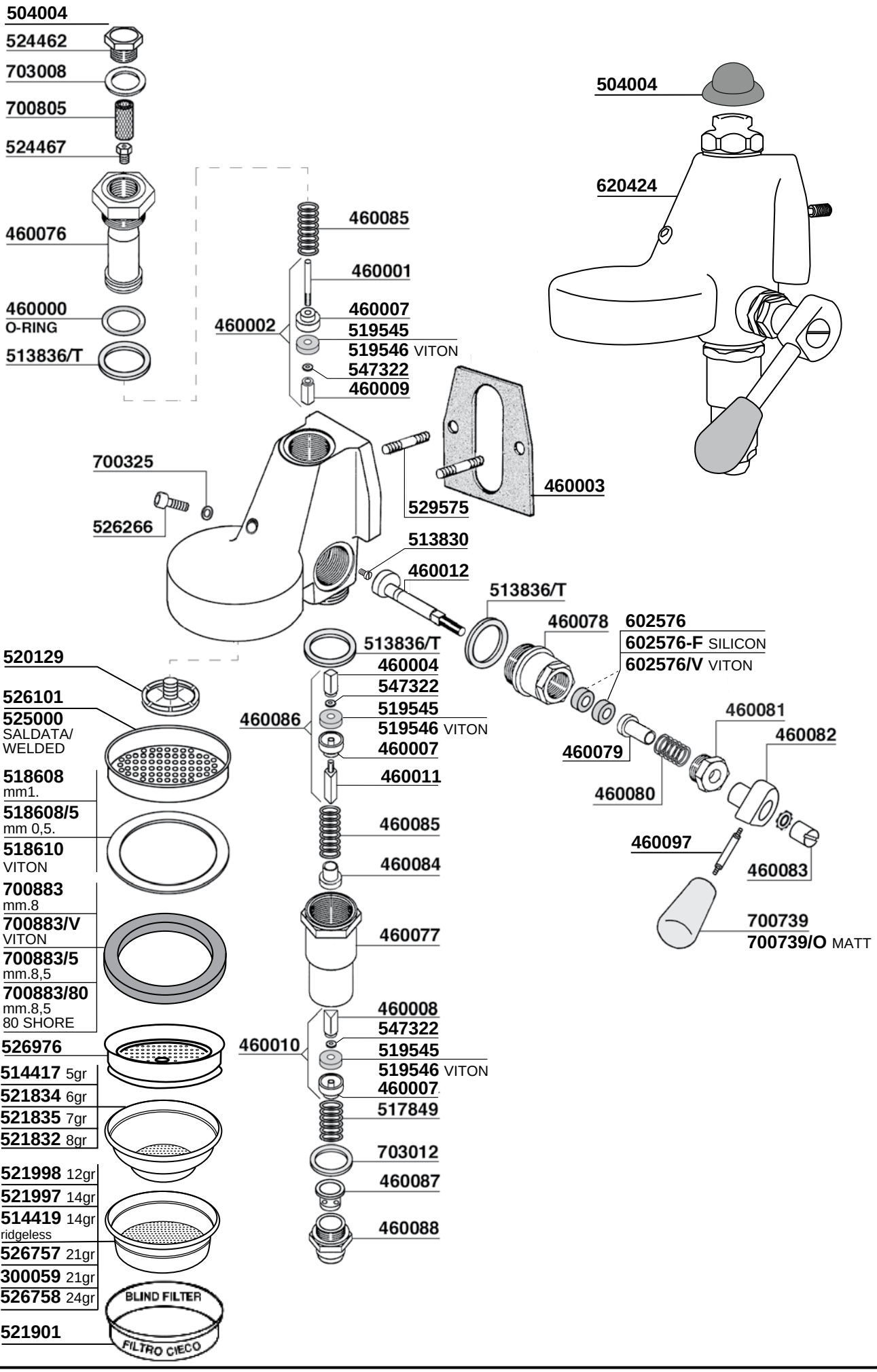
504004
524462
703008
700805
524467
460076
460000
O-RING
513836/T
460085
460001
460002
460007
519545
519546 VITON
547322
460009
700325
526266
529575
460003
513830
460012
513836/T
460078
602576
602576-F SILICON
602576/V VITON
504004
620424
460081
460082
460079
460080
460097
460083
700739
700739/O MATT
513836/T
460004
547322
460086
519545
519546 VITON
460007
460011
460085
460084
460077
460008
547322
460010
519545
519546 VITON
460007
517849
703012
460087
460088
520129
526101
525000
SALDATA/
WELDED
518608
mm1.
518608/5
mm 0,5.
518610
VITON
700883
mm.8
700883/V
VITON
700883/5
mm.8,5
700883/80
mm.8,5
80 SHORE
526976
514417 5gr
521834 6gr
521835 7gr
521832 8gr
521998 12gr
521997 14gr
514419 14gr
ridgeless
526757 21gr
300059 21gr
526758 24gr
521901
BLIND FILTER
FILTRO CIECO

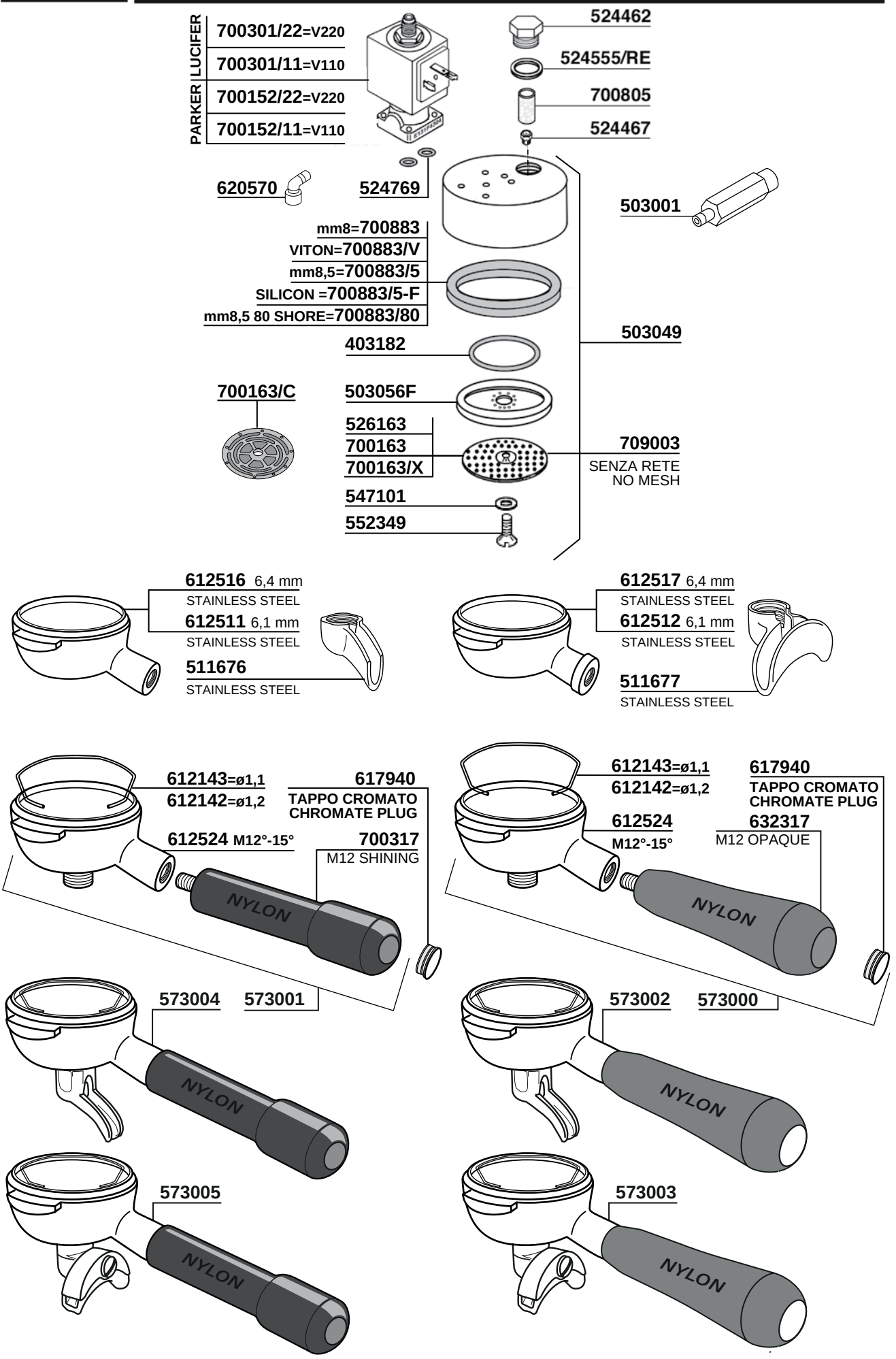
PARKER LUCIFER
700301/22=V220
700301/11=V110
700152/22=V220
700152/11=V110
524462
524555/RE
700805
524467
620570
524769
503001
mm8=700883
VITON=700883/V
mm8,5=700883/5
SILICON =700883/5-F
mm8,5 80 SHORE=700883/80
503049
403182
700163/C
503056F
526163
700163
700163/X
709003
SENZA RETE
NO MESH
547101
552349
612516 6,4 mm
STAINLESS STEEL
612511 6,1 mm
STAINLESS STEEL
511676
STAINLESS STEEL
612517 6,4 mm
STAINLESS STEEL
612512 6,1 mm
STAINLESS STEEL
511677
STAINLESS STEEL
612143=ø1,1
612142=ø1,2
617940
TAPPO CROMATO
CHROMATE PLUG
612524 M12°-15°
700317
M12 SHINING
NYLON
612143=ø1,1
612142=ø1,2
617940
TAPPO CROMATO
CHROMATE PLUG
612524
M12°-15°
632317
M12 OPAQUE
NYLON
573004
573001
NYLON
573002
573000
NYLON
573005
NYLON
573003
NYLON

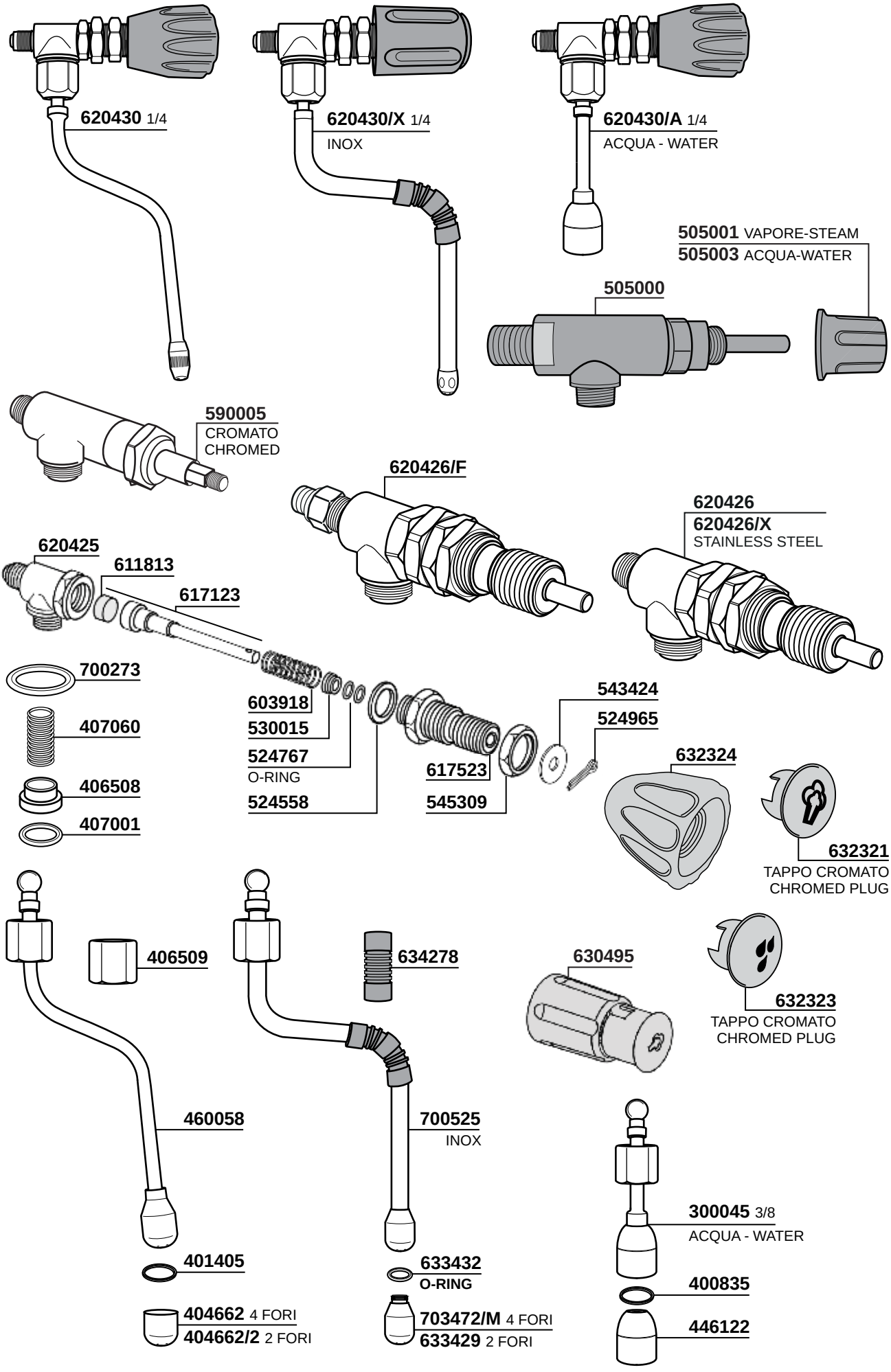
620430 1/4
620430/X 1/4
INOX
620430/A 1/4
ACQUA - WATER
505001 VAPORE-STEAM
505003 ACQUA-WATER
505000
590005
CROMATO
CHROMED
620426/F
620426
620426/X
STAINLESS STEEL
620425
611813
617123
700273
407060
406508
407001
603918
530015
524767
O-RING
524558
617523
545309
543424
524965
632324
632321
TAPPO CROMATO
CHROMED PLUG
406509
634278
630495
632323
TAPPO CROMATO
CHROMED PLUG
460058
700525
INOX
401405
633432
O-RING
404662 4 FORI
404662/2 2 FORI
703472/M 4 FORI
633429 2 FORI
300045 3/8
ACQUA - WATER
400835
446122

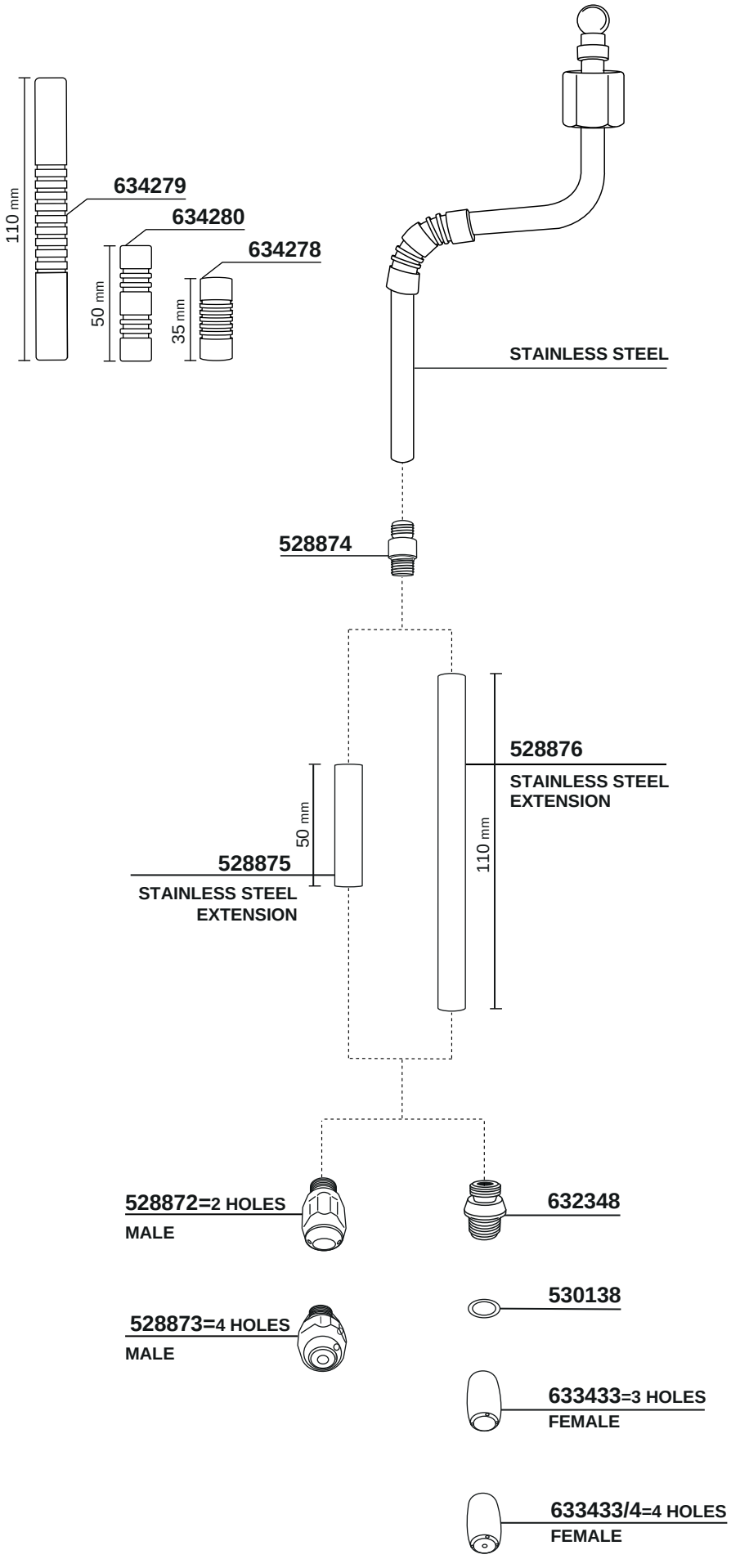
110 mm
634279
634280
634278
50 mm
35 mm
STAINLESS STEEL
528874
528876
STAINLESS STEEL
EXTENSION
110 mm
50 mm
528875
STAINLESS STEEL
EXTENSION
528872=2 HOLES
MALE
632348
530138
528873=4 HOLES
MALE
633433=3 HOLES
FEMALE
633433/4=4 HOLES
FEMALE

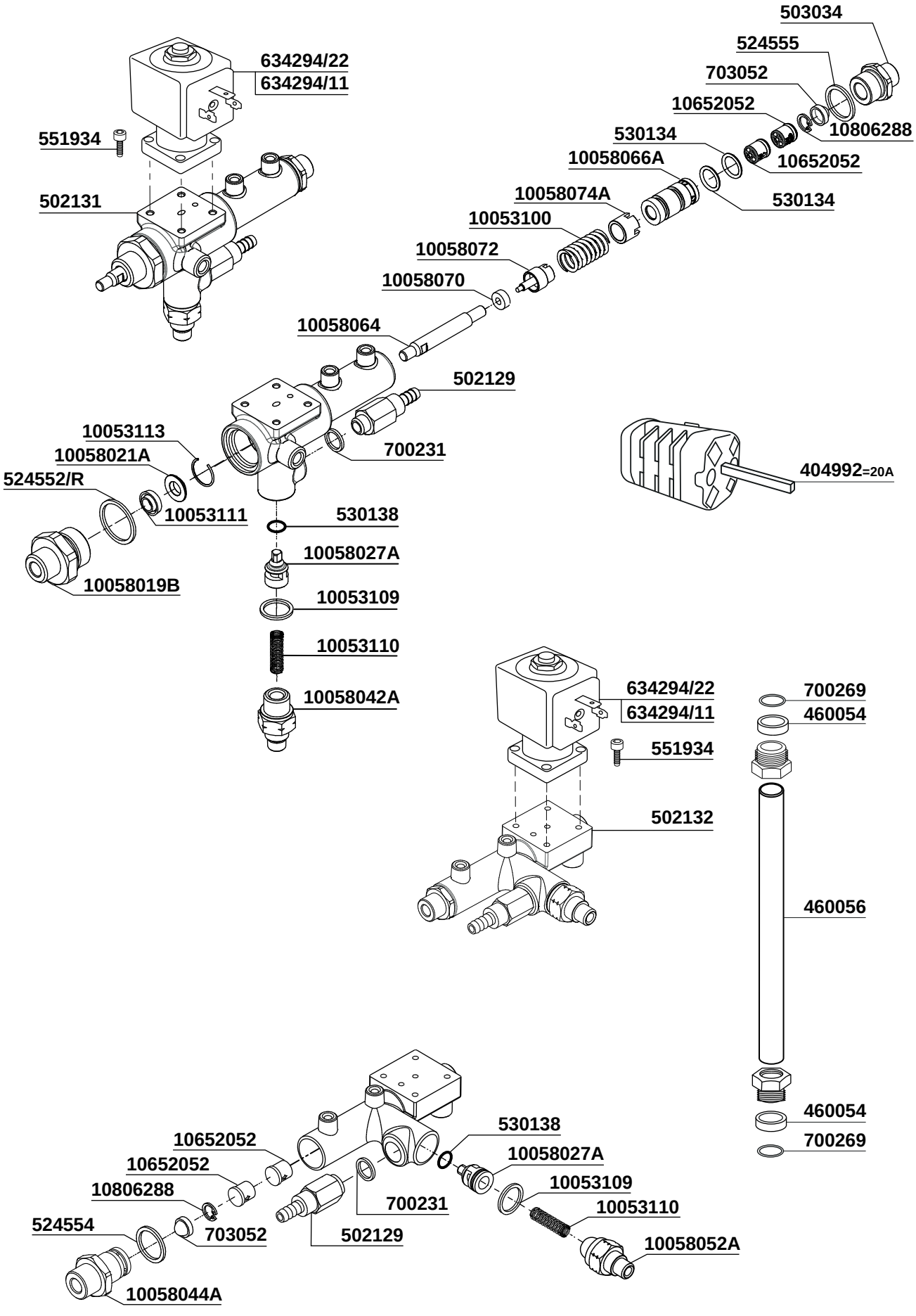
503034
524555
703052
10652052
10806288
530134
10652052
10058066A
530134
10058074A
10053100
10058072
10058070
10058064
502129
700231
634294/22
634294/11
551934
502131
10053113
10058021A
524552/R
10053111
10058019B
530138
10058027A
10053109
10053110
10058042A
404992=20A
634294/22
634294/11
551934
502132
700269
460054
460056
460054
700269
530138
10652052
10652052
10806288
524554
703052
10058044A
700231
502129
10058027A
10053109
10053110
10058052A

272

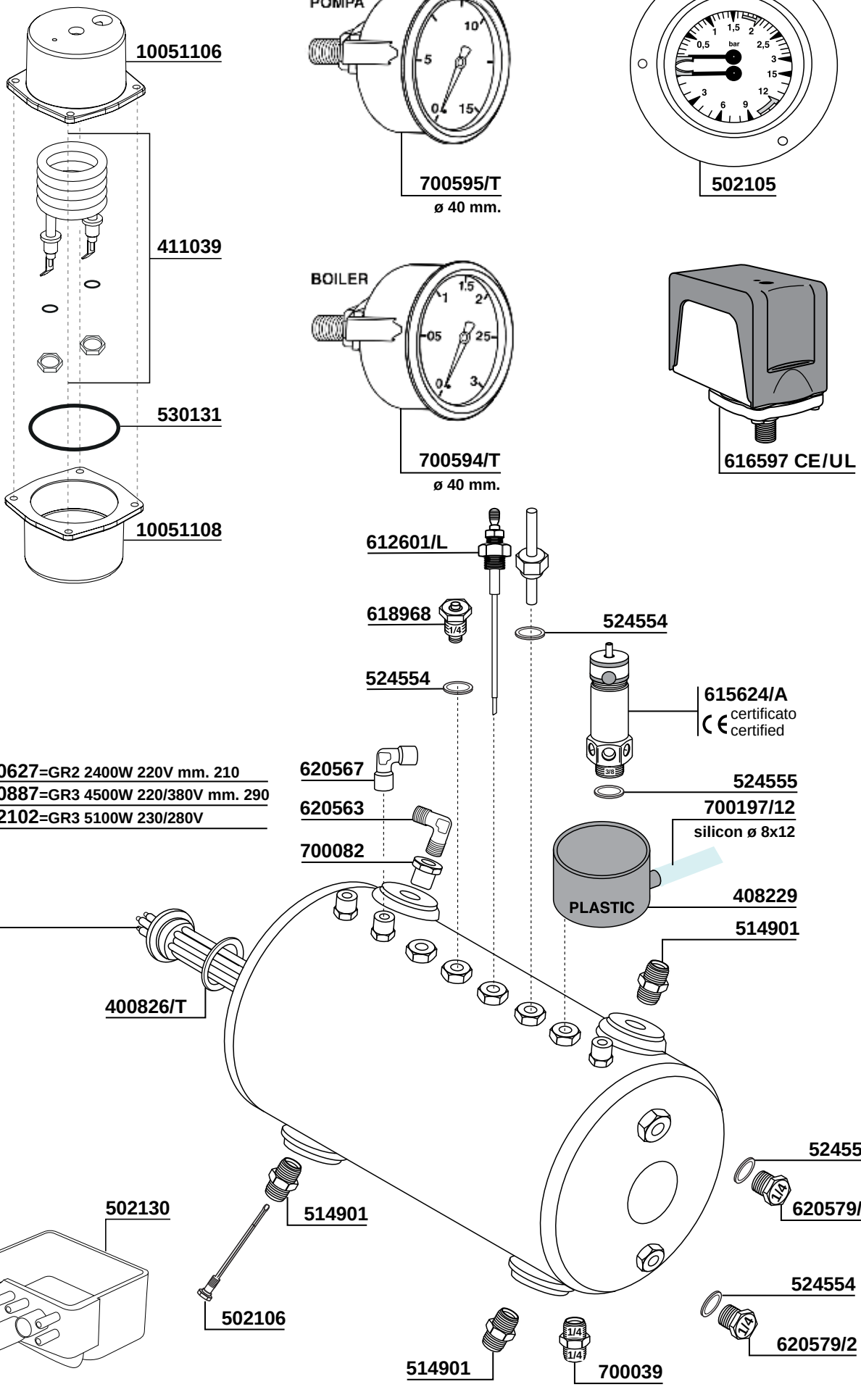
10051106
411039
530131
10051108
POMPA
700595/T
ø 40 mm.
502105
BOILER
700594/T
ø 40 mm.
616597 CE/UL
612601/L
618968
524554
524554
615624/A
certificato
certified
524555
620567
620563
700082
700197/12
silicon ø 8x12
PLASTIC
408229
514901
400627=GR2 2400W 220V mm. 210
700887=GR3 4500W 220/380V mm. 290
502102=GR3 5100W 230/280V
400826/T
524554
620579/2
502130
514901
502106
524554
620579/2
514901
700039

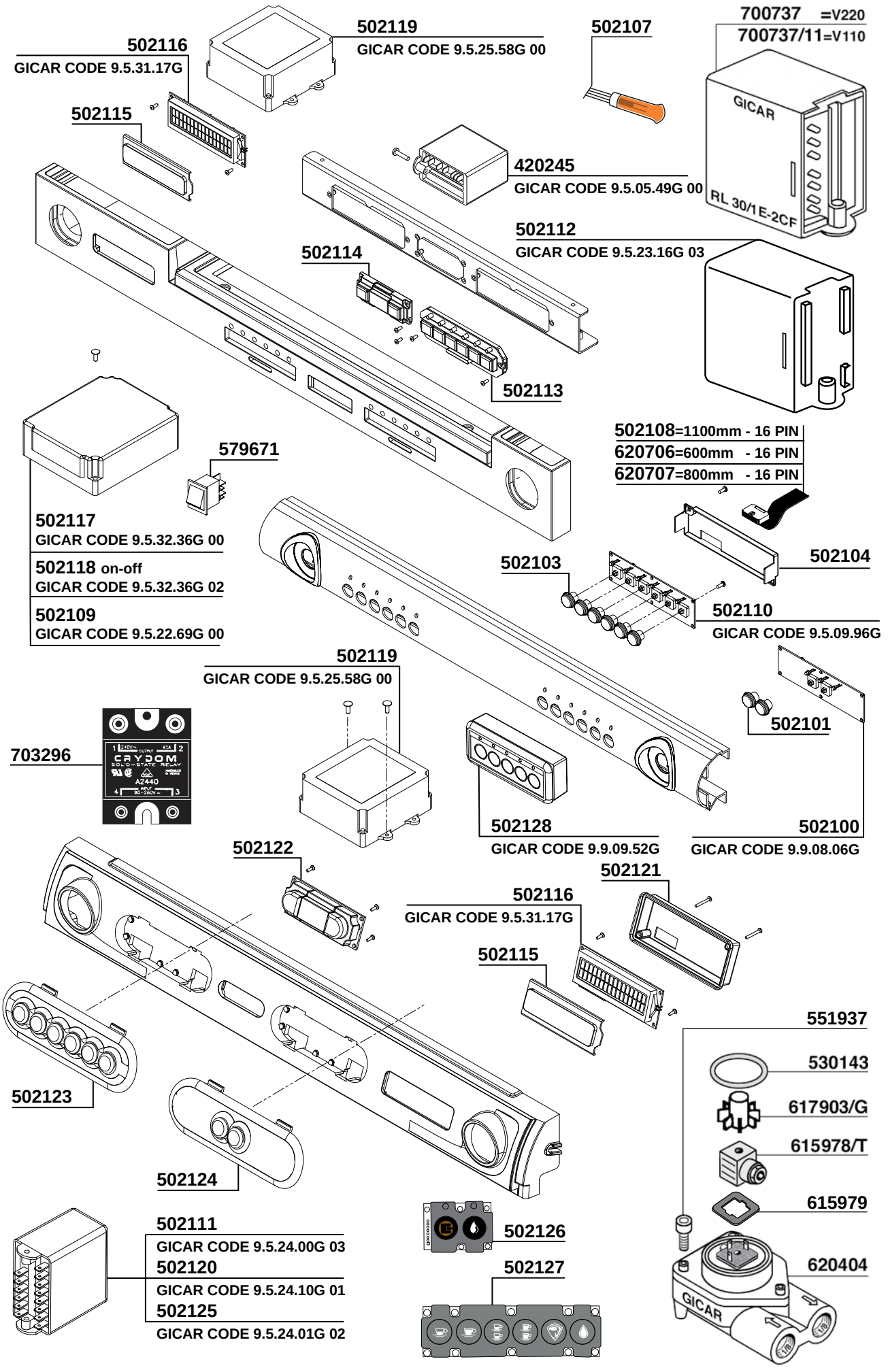
502119
GICAR CODE 9.5.25.58G 00
502116
GICAR CODE 9.5.31.17G
502115
502107
700737 =V220
700737/11=V110
GICAR
RL 30/1 E-2CF
420245
GICAR CODE 9.5.05.49G 00
502112
GICAR CODE 9.5.23.16G 03
502114
502113
502108=1100mm - 16 PIN
620706=600mm - 16 PIN
620707=800mm - 16 PIN
579671
502117
GICAR CODE 9.5.32.36G 00
502118 on-off
GICAR CODE 9.5.32.36G 02
502109
GICAR CODE 9.5.22.69G 00
502103
502104
502110
GICAR CODE 9.5.09.96G
502119
GICAR CODE 9.5.25.58G 00
703296
CRYDOM
SOLID-STATE RELAY
A2440
502101
502128
GICAR CODE 9.9.09.52G
502100
GICAR CODE 9.9.08.06G
502122
502121
502116
GICAR CODE 9.5.31.17G
502115
551937
530143
617903/G
615978/T
615979
620404
GICAR
502123
502124
502126
502127
502111
GICAR CODE 9.5.24.00G 03
502120
GICAR CODE 9.5.24.10G 01
502125
GICAR CODE 9.5.24.01G 02

274

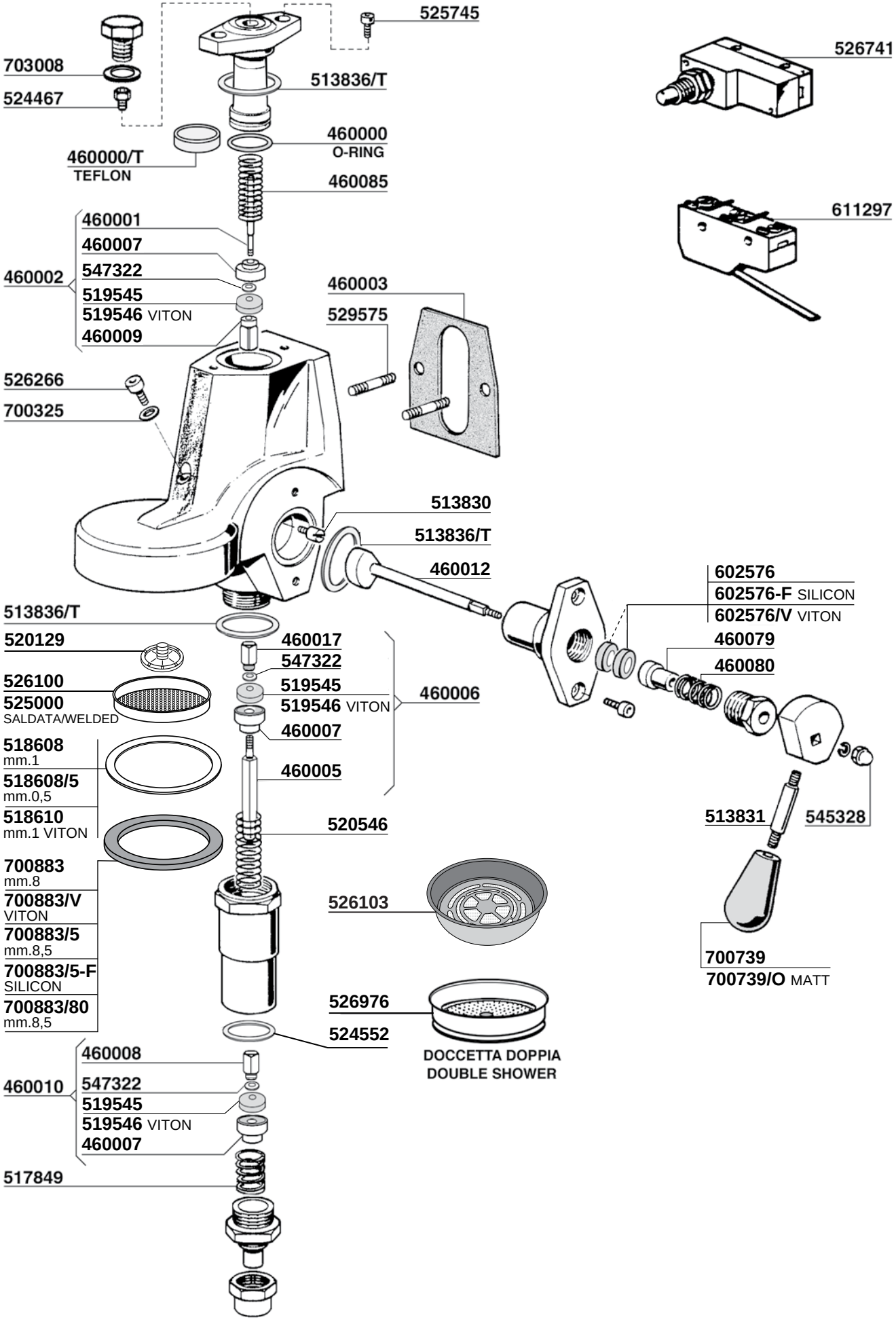
525745
703008
524467
513836/T
460000
O-RING
460000/T
TEFLON
460085
460001
460007
460002
547322
519545
519546 VITON
460009
460003
529575
526266
700325
513830
513836/T
460012
513836/T
520129
526100
525000
SALDATA/WELDED
460017
547322
519545
519546 VITON
460007
460006
518608
mm.1
518608/5
mm.0,5
518610
mm.1 VITON
460005
520546
700883
mm.8
700883/V
VITON
700883/5
mm.8,5
700883/5-F
SILICON
700883/80
mm.8,5
526103
526976
524552
DOCCETTA DOPPIA
DOUBLE SHOWER
460008
460010
547322
519545
519546 VITON
460007
517849
526741
611297
602576
602576-F SILICON
602576/V VITON
460079
460080
513831
545328
700739
700739/O MATT

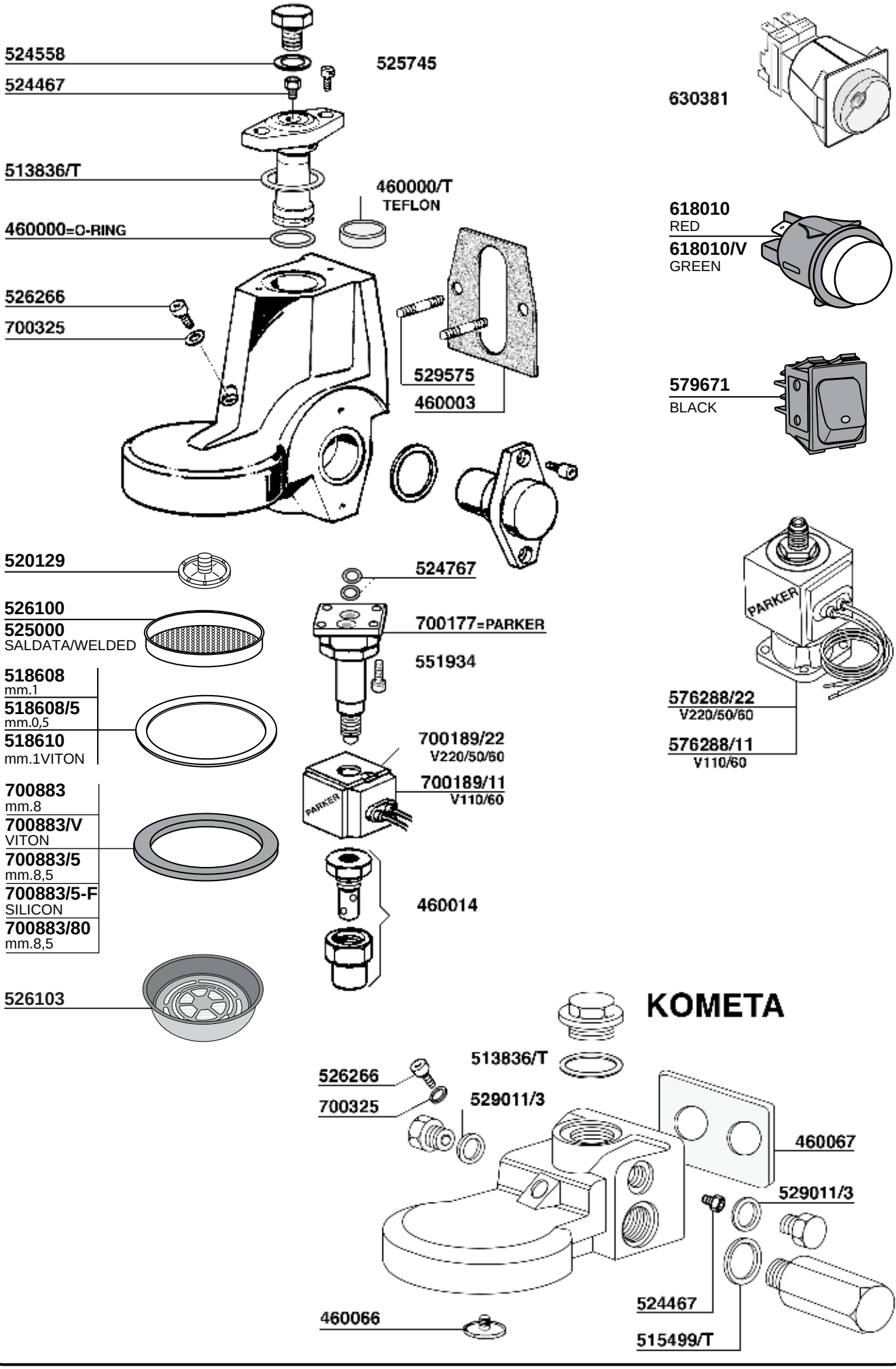
524558
524467
525745
513836/T
460000/T
TEFLON
460000=O-RING
526266
700325
529575
460003
630381
618010
RED
618010/V
GREEN
579671
BLACK
520129
524767
526100
525000
SALDATA/WELDED
700177=PARKER
551934
518608
mm.1
518608/5
mm.0,5
518610
mm.1VITON
700189/22
V220/50/60
700189/11
V110/60
PARKER
576288/22
V220/50/60
576288/11
V110/60
700883
mm.8
700883/V
VITON
700883/5
mm.8,5
700883/5-F
SILICON
700883/80
mm.8,5
460014
526103
KOMETA
513836/T
526266
700325
529011/3
460067
529011/3
524467
515499/T
460066

276

612143=Ø1,1
612142=Ø1,2

612522/LM

M12

632317 M12

617940
TAPPO CROMATO
CHROMATE PLUG

700317/G M12
700616 M10

GOMMA-RUBBER

460016/G

GOMMA-RUBBER

460016

573527

573526

3/8 3/8 3/8

502003 700024 511672

BLINDER FILTER
FILTRO CIECO

521902

514418=6gr
521830=7gr

516575=12gr
521994=14gr
514419=14gr
ridgeless
526208=18gr
700757=21gr
526758=24gr

573525/MG=15°

15°

M10

612522/MU

632316 M10

617940 TAPPO CROMATO-CHROMATE PLUG

617099

15°

617707

15°

617708

15°

700113/V

700148/Z

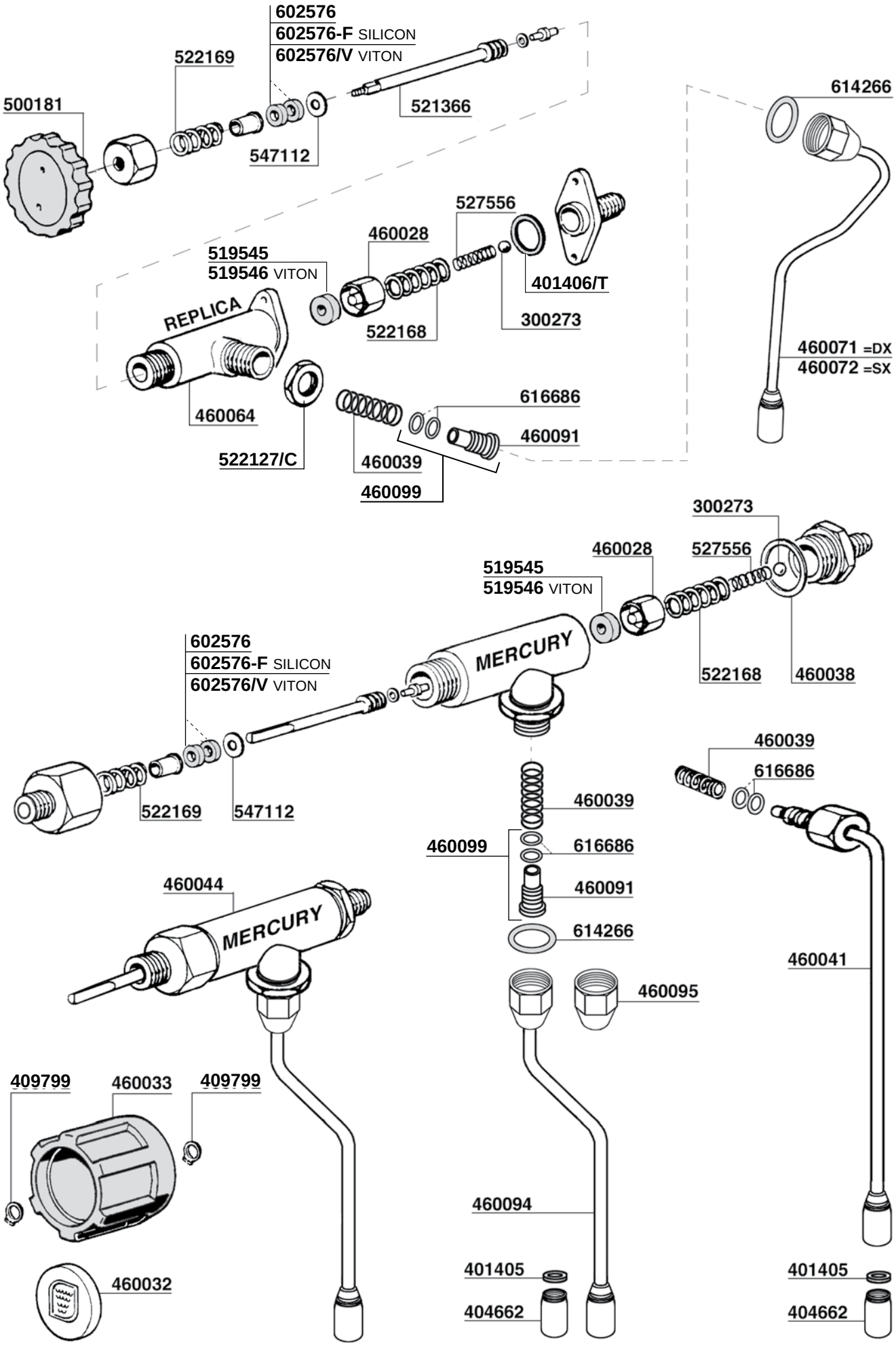
602576
602576-F SILICON
602576/V VITON
522169
500181
521366
547112
614266
527556
460028
519545
519546 VITON
401406/T
REPLICA
300273
522168
460071 =DX
460072 =SX
460064
616686
522127/IC
460039
460091
460099
300273
460028
527556
519545
519546 VITON
602576
602576-F SILICON
602576/V VITON
MERCURY
522168
460038
460039
616686
522169
547112
460039
460099
616686
460091
614266
460044
MERCURY
460041
460095
409799
460033
409799
460094
401405
404662
460032
401405
404662

278

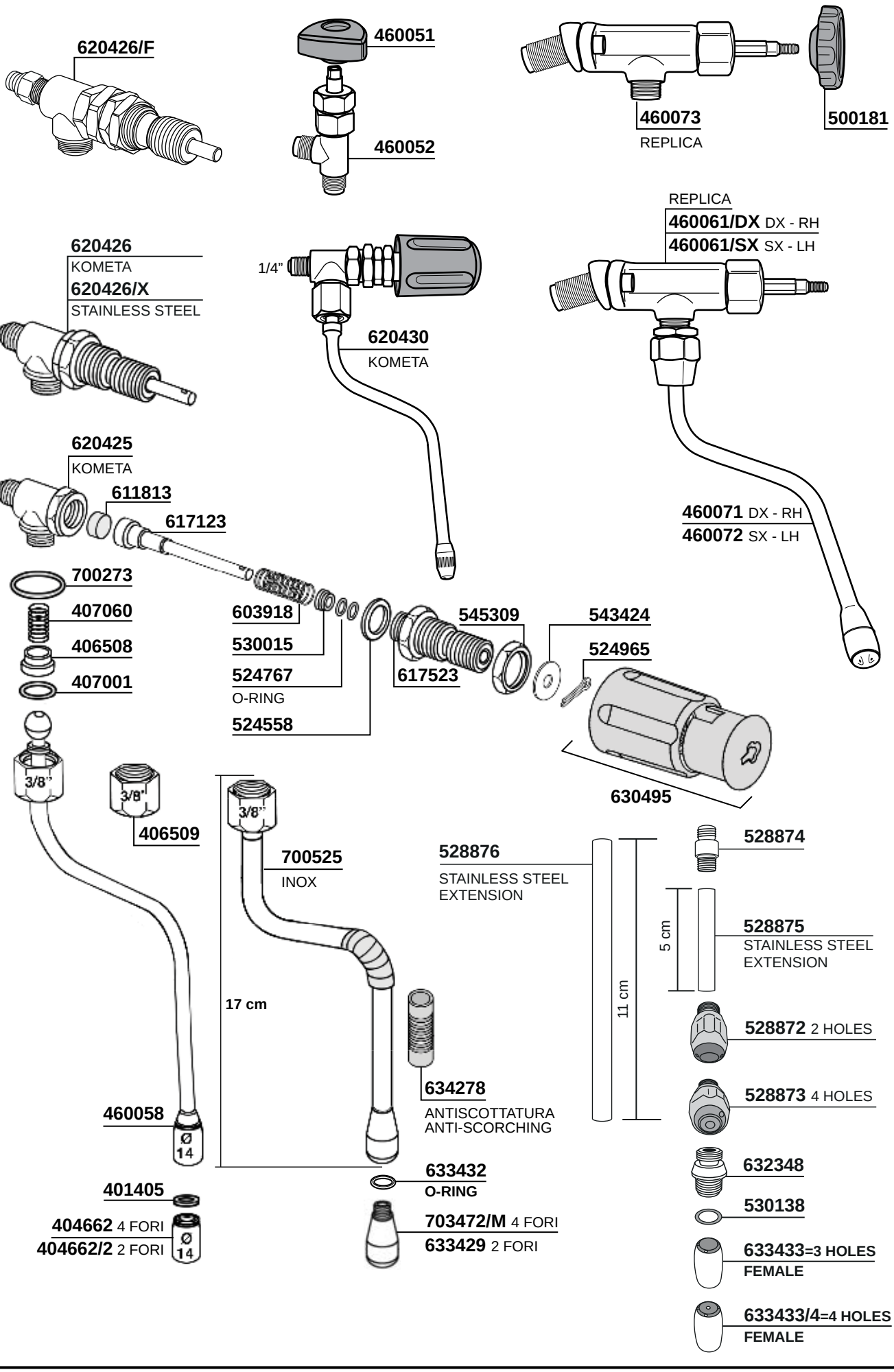
620426/F
460051
460052
460073
REPLICA
500181
620426
KOMETA
620426/X
STAINLESS STEEL
1/4"
620430
KOMETA
REPLICA
460061/DX DX - RH
460061/SX SX - LH
620425
KOMETA
611813
617123
460071 DX - RH
460072 SX - LH
700273
407060
406508
407001
603918
530015
524767
O-RING
524558
617523
545309
543424
524965
630495
3/8"
406509
700525
INOX
17 cm
460058
Ø 14
401405
404662 4 FORI
404662/2 2 FORI
Ø 14
634278
ANTISCOTTATURA
ANTI-SCORCHING
633432
O-RING
703472/M 4 FORI
633429 2 FORI
528876
STAINLESS STEEL
EXTENSION
11 cm
5 cm
528874
528875
STAINLESS STEEL
EXTENSION
528872 2 HOLES
528873 4 HOLES
632348
530138
633433=3 HOLES
FEMALE
633433/4=4 HOLES
FEMALE

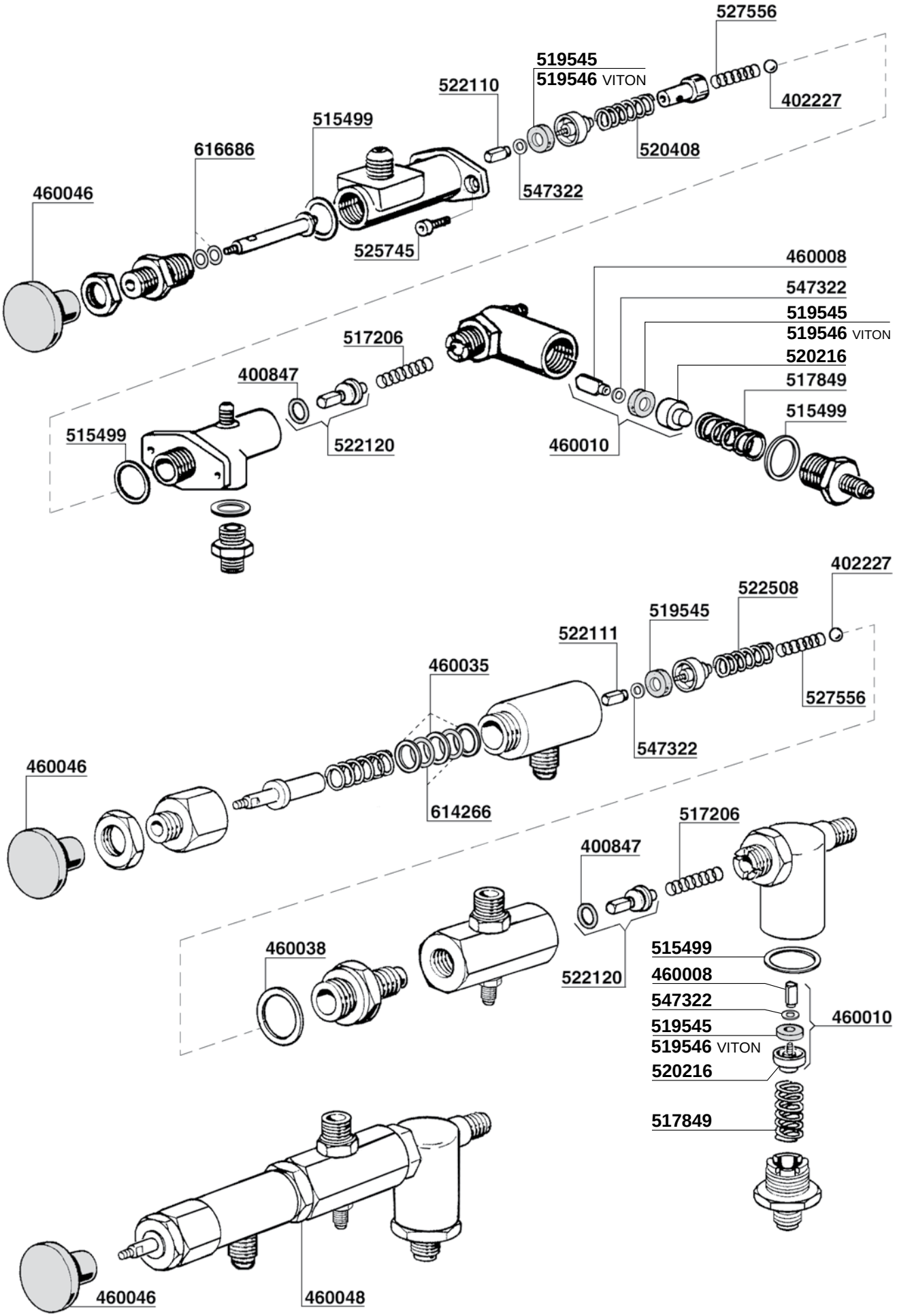
527556
519545
519546 VITON
522110
402227
515499
520408
616686
547322
460046
525745
460008
547322
519545
519546 VITON
517206
520216
400847
517849
515499
515499
522120
460010
402227
522508
519545
522111
460035
527556
547322
460046
614266
517206
400847
460038
515499
460008
522120
547322
519545
460010
519546 VITON
520216
517849
460046
460048

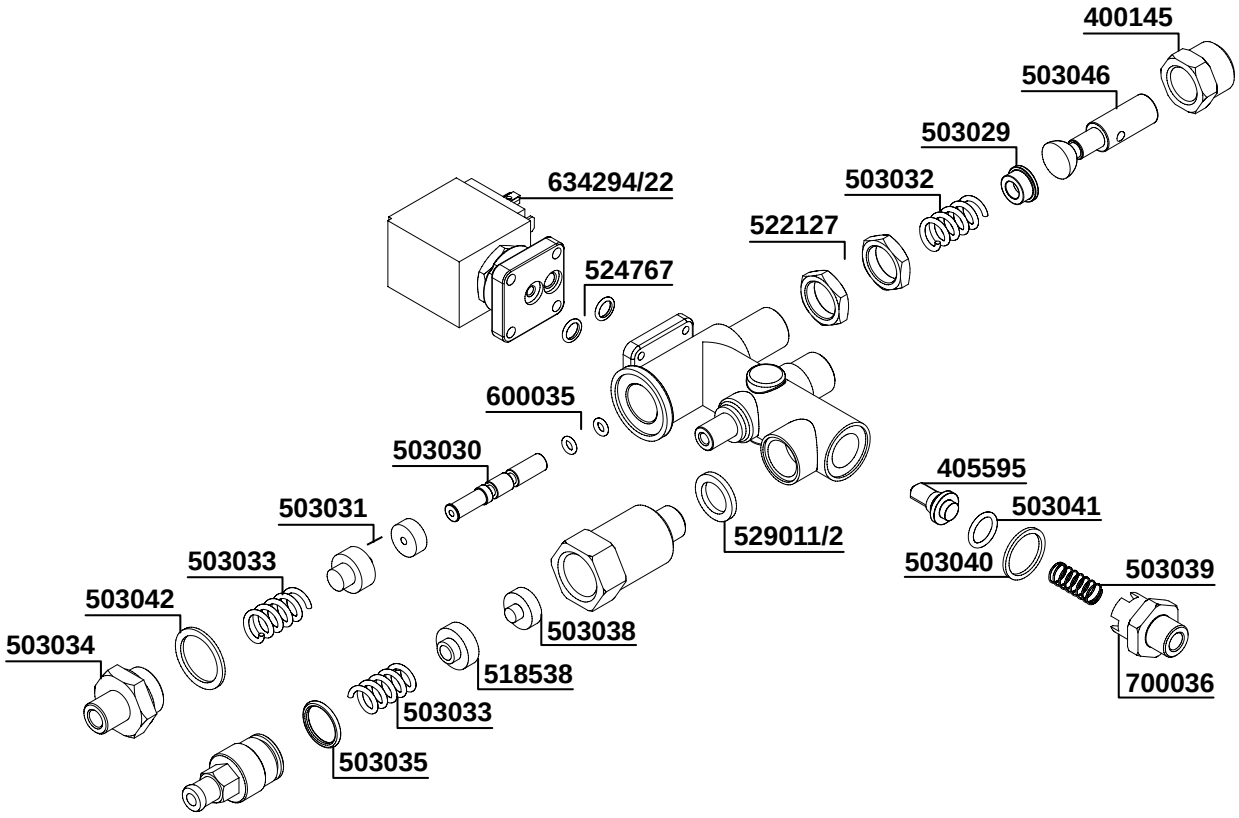
400145
503046
503029
503032
522127
634294/22
524767
600035
503030
503031
503033
503042
503034
503038
518538
503033
503035
529011/2
405595
503041
503040
503039
700036

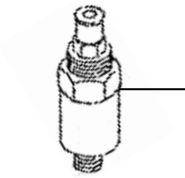
401183
401183/V=VITON

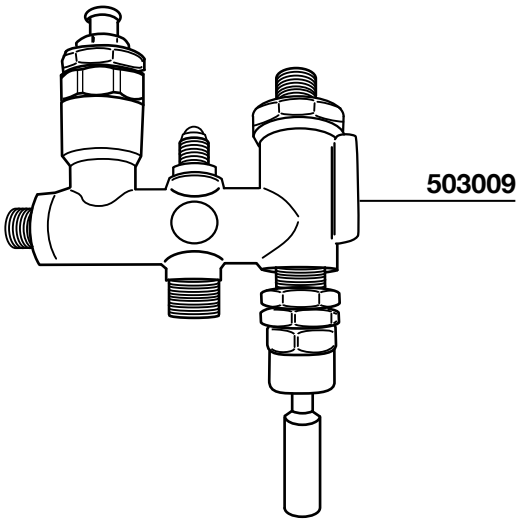
503009

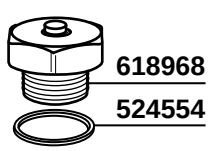

618968
524554

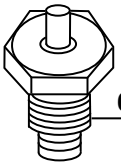

618970

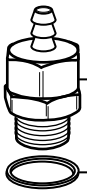

618969
ø 8
524554



615626/A
certificato
certified
524552/R



615624/A
certificato
certified
524554

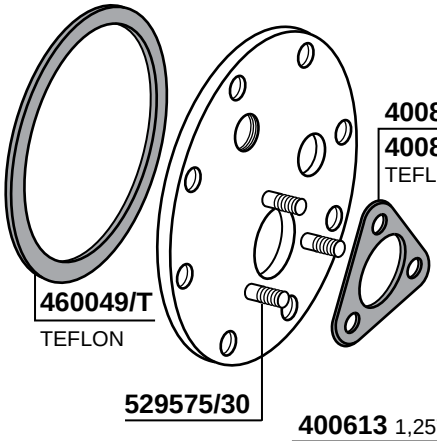

400819
400819/T
TEFLON
460049/T
TEFLON
529575/30

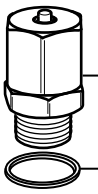

700750
524554

400614 GR1 220V 1800W
400615 GR2 220V 3000W
401834 GR2 220V 3500W
400615/38 GR2 380V 3000W
460059 MINIMAX GR2 220V 2700W 250mm
400616 GR3 220V 4000W
400617 GR3/4 220V 5000W

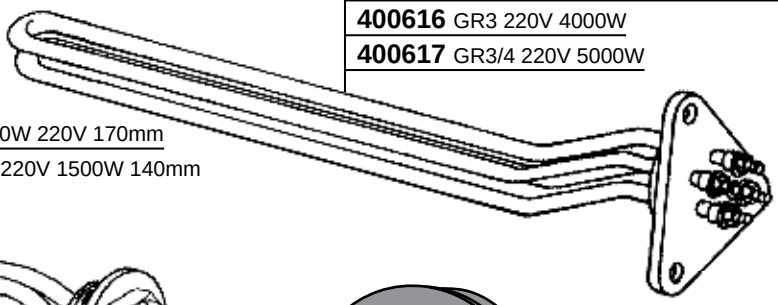

400826/T

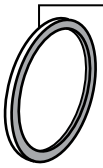

400613 1,25" 2000W 220V 170mm
700858/22 1,25" 220V 1500W 140mm

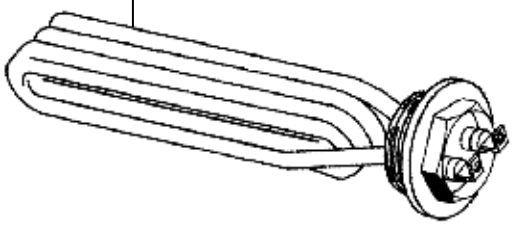

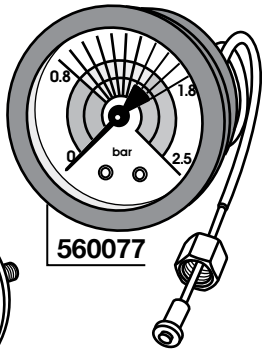

560077

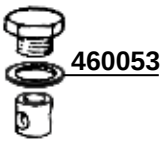

460053

401378
401378/T
TEFLON

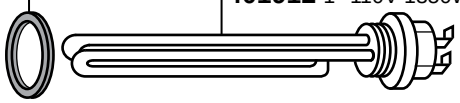

401911 1" 220V 1350W 135mm
401912 1" 110V 1350W 135mm

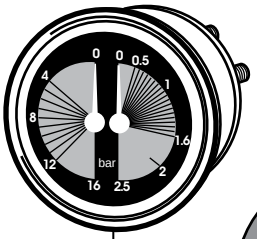

460050

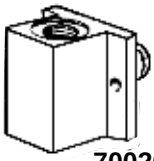

700269
460054

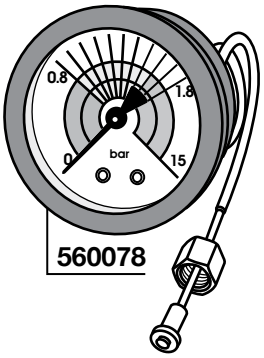

560078

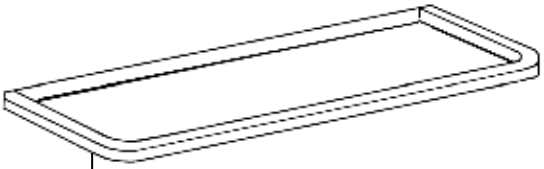

460069 GR1 COMPACT GR2
460068 GR2



460056

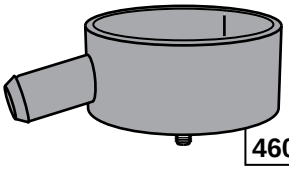

460070

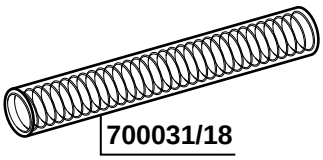

700031/18
ELISPIR Ø 18x25



460054
700269

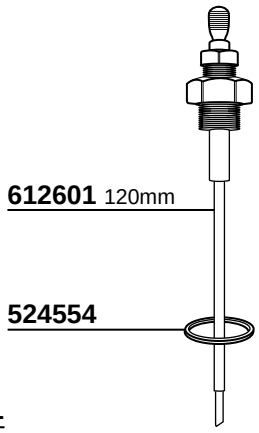

612601 120mm
524554

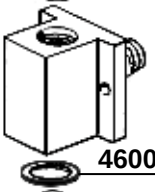

460053

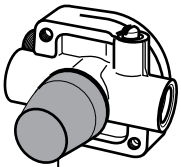

700464

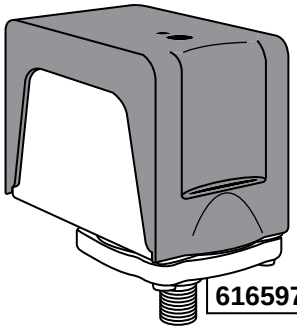

616597 CE/UL

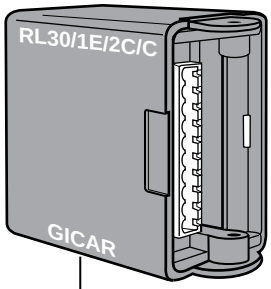

460062 220V
460062/11 110V

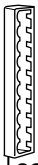

620709/10
CONNETTORE 10 PIN

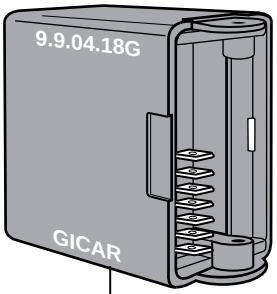

460029 GR2/3
DE LUX

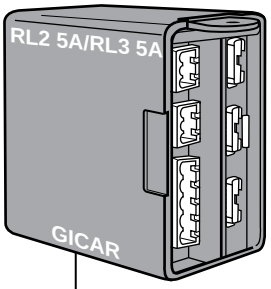

460075 GR1 220V
KOMETA

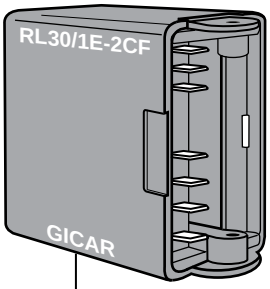

700737 220V
700737/11 110V

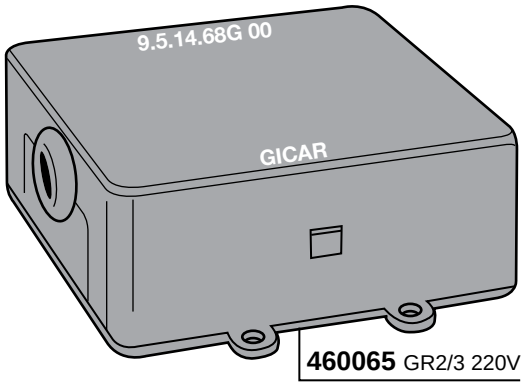

460065 GR2/3 220V
GICAR 3D

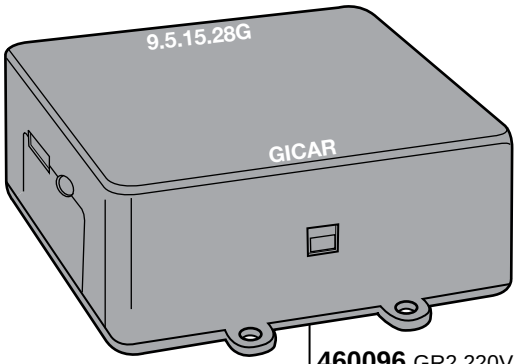

460096 GR2 220V
GICAR 3D5

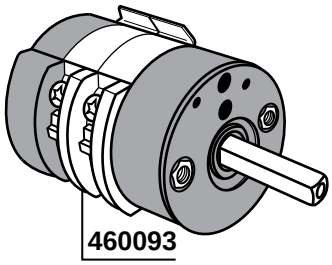

460093

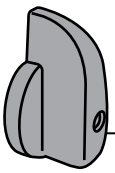

613656

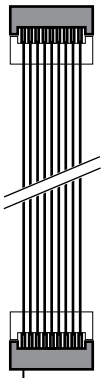

620714
8 pin 800 mm

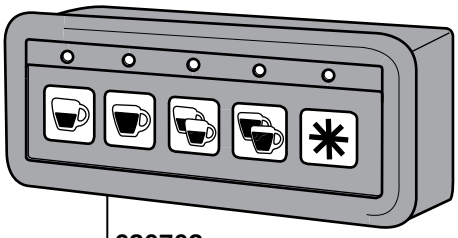

620702 GR1 220V
PULSANTIERA + CENTRALINA
TOUCH PAD + ELECTRONIC BOX

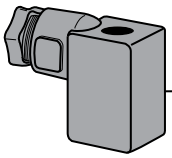

615978/T



615979



530143

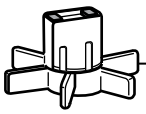

617903

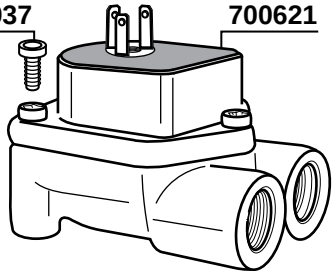

551937
700621

700869/22 220V
700869/11 110V

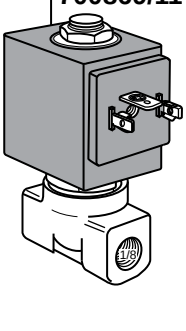

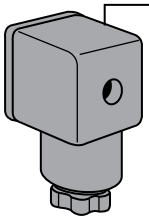

615978

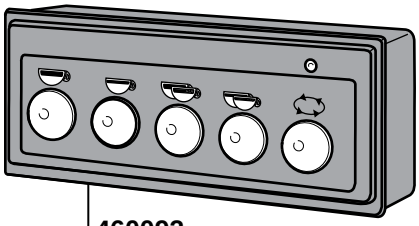

460092
PULSANTIERA - TOUCH PAD

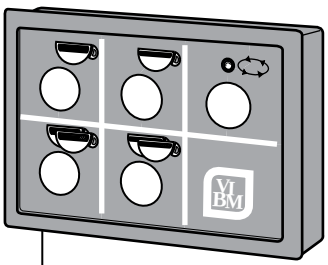

460074 KOMETA
PULSANTIERA - TOUCH PAD

DOMOBAR SUPER

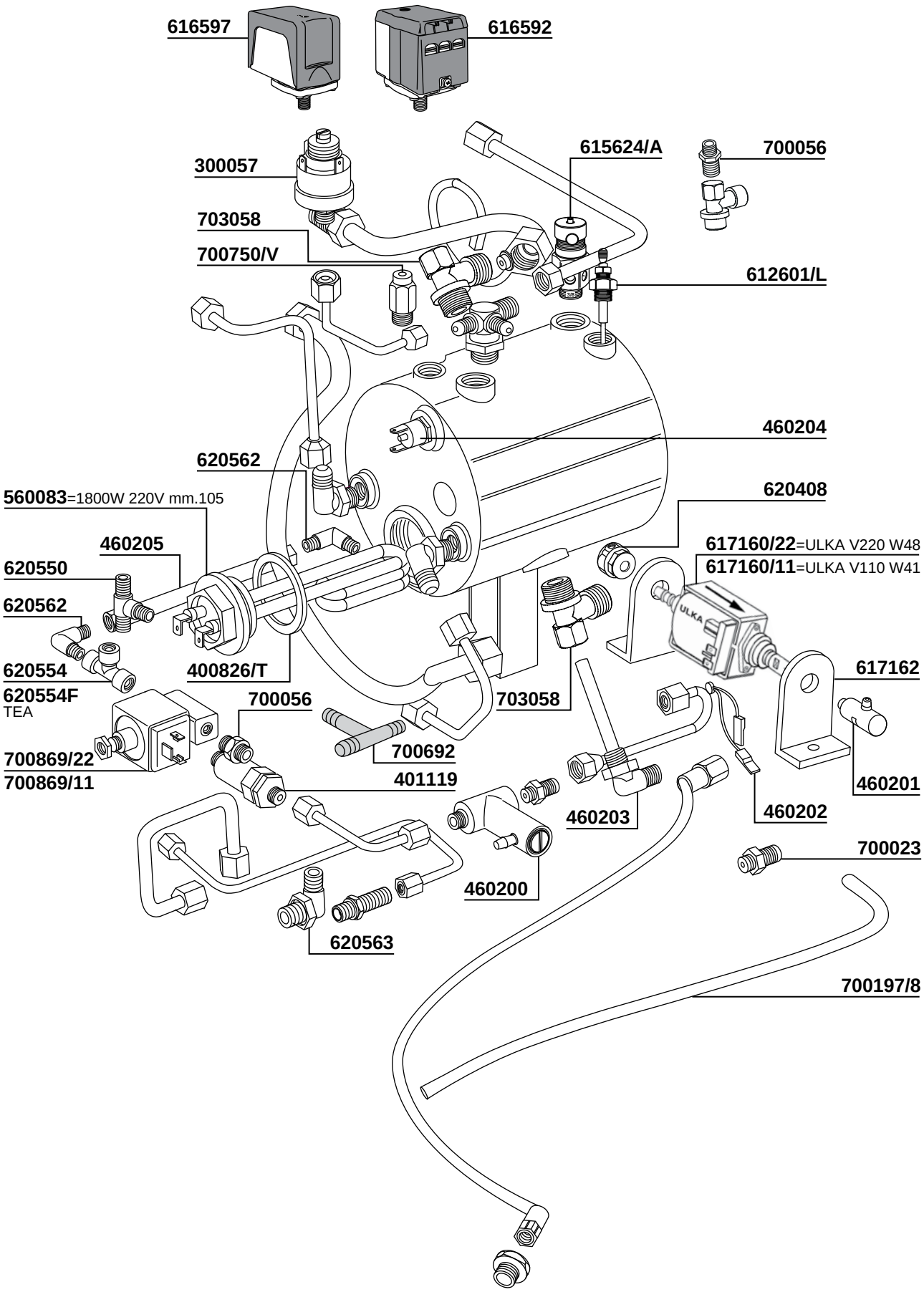

DOMOBAR SUPER

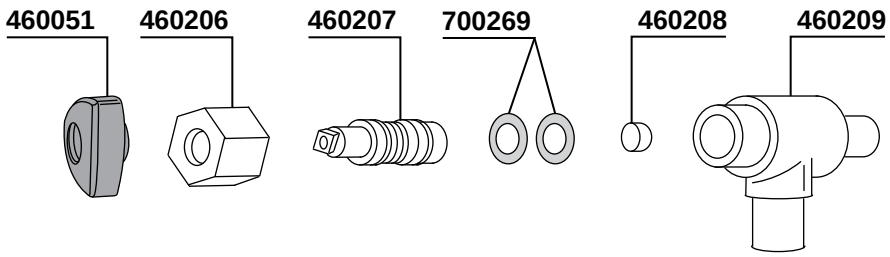

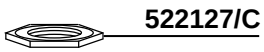

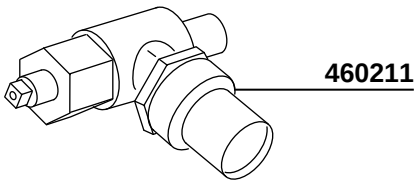

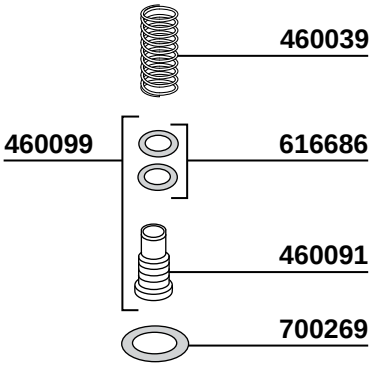

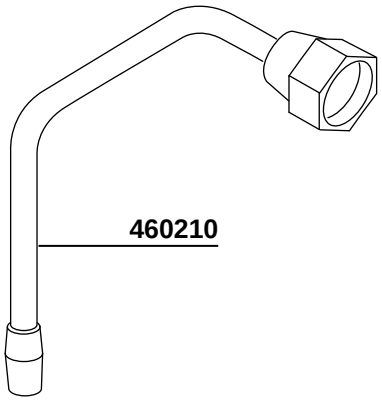

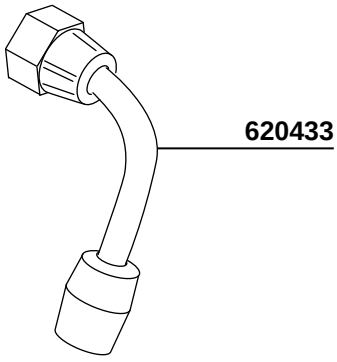

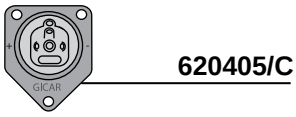

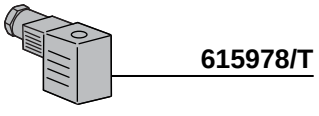

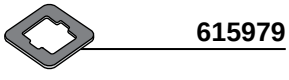

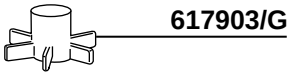

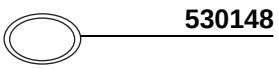







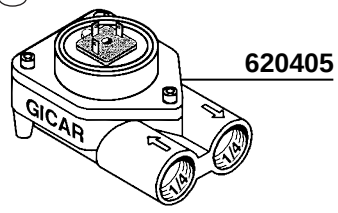

DOMOBAR CALDAIA VERTICALE

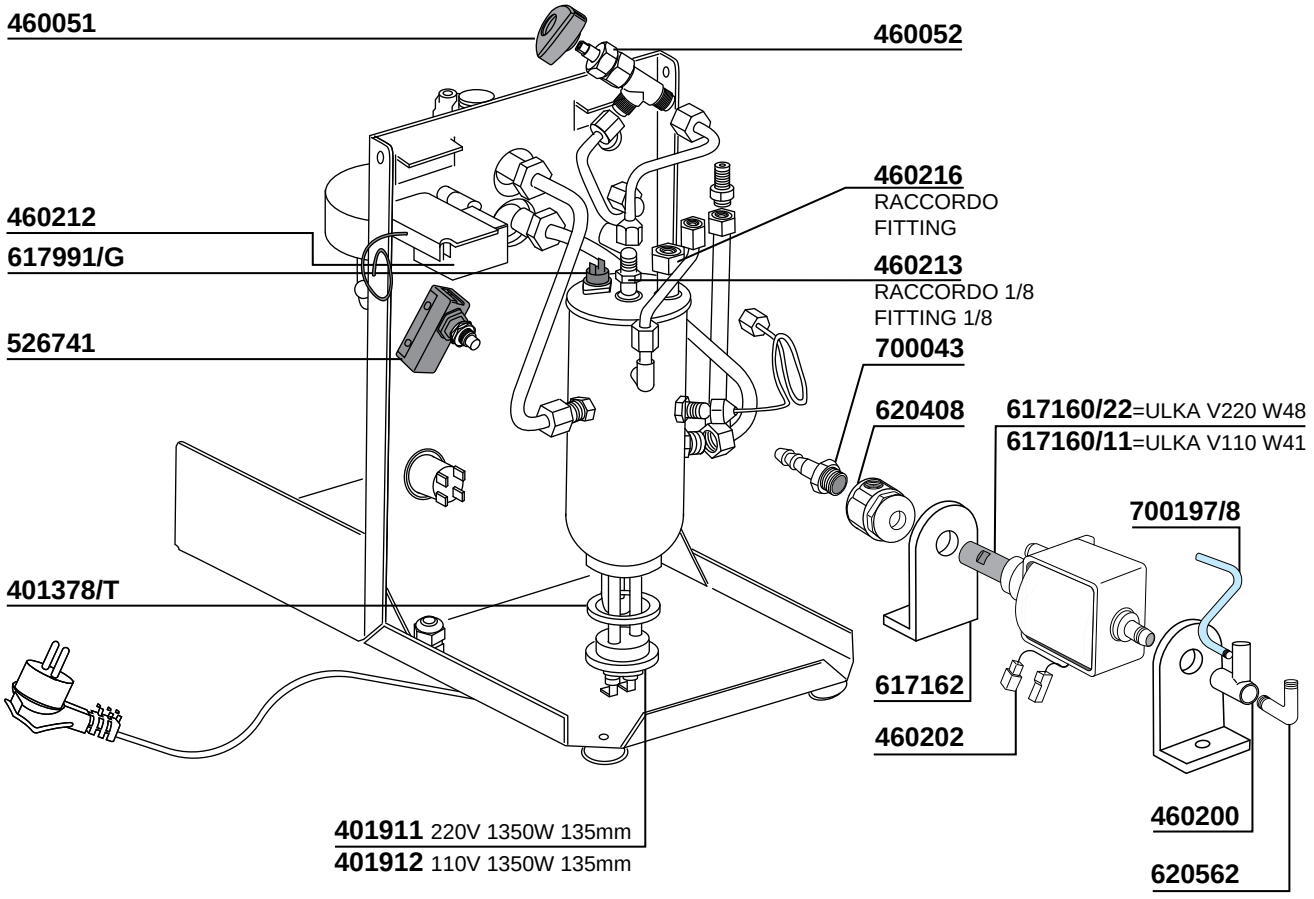

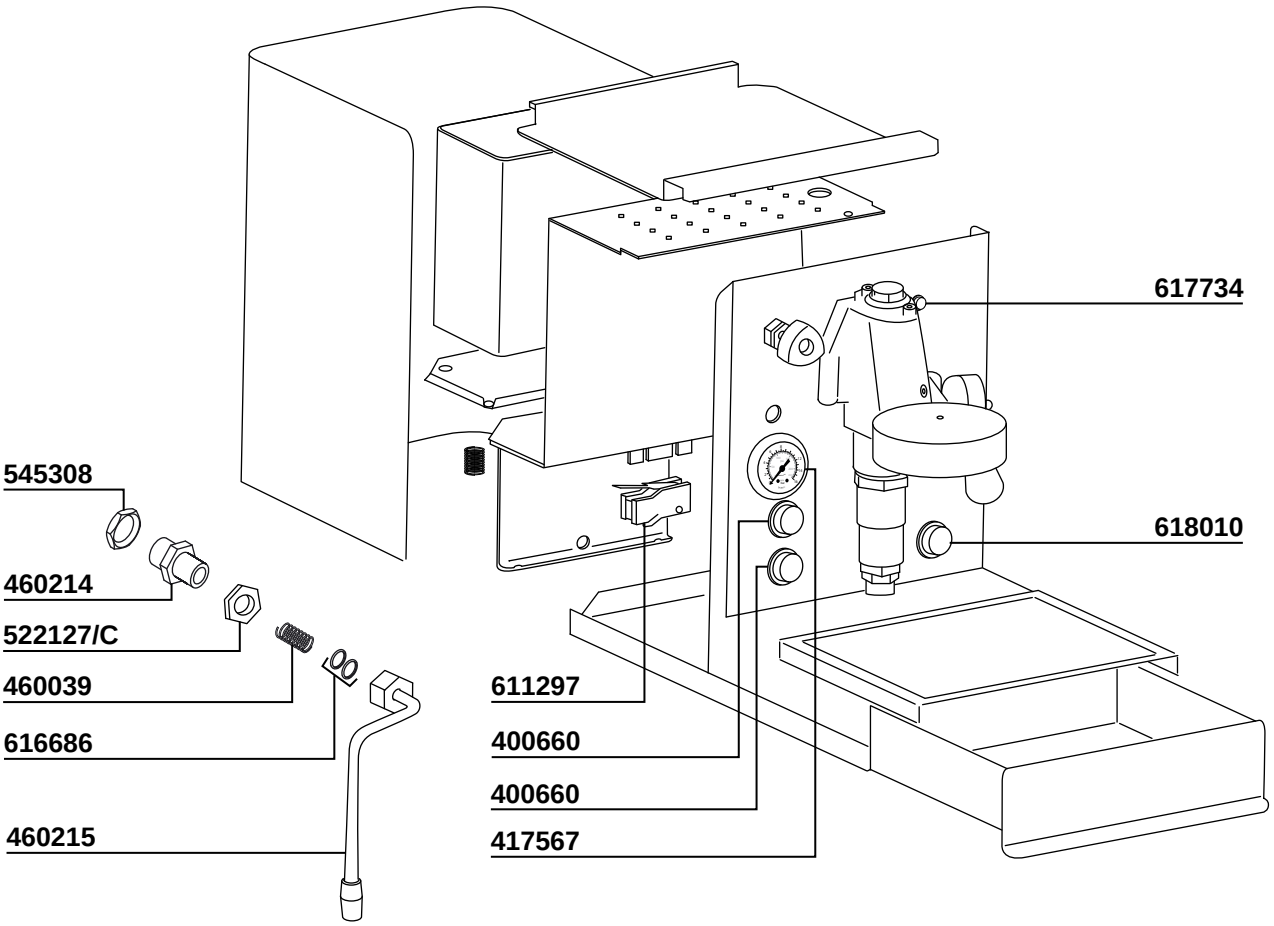

286

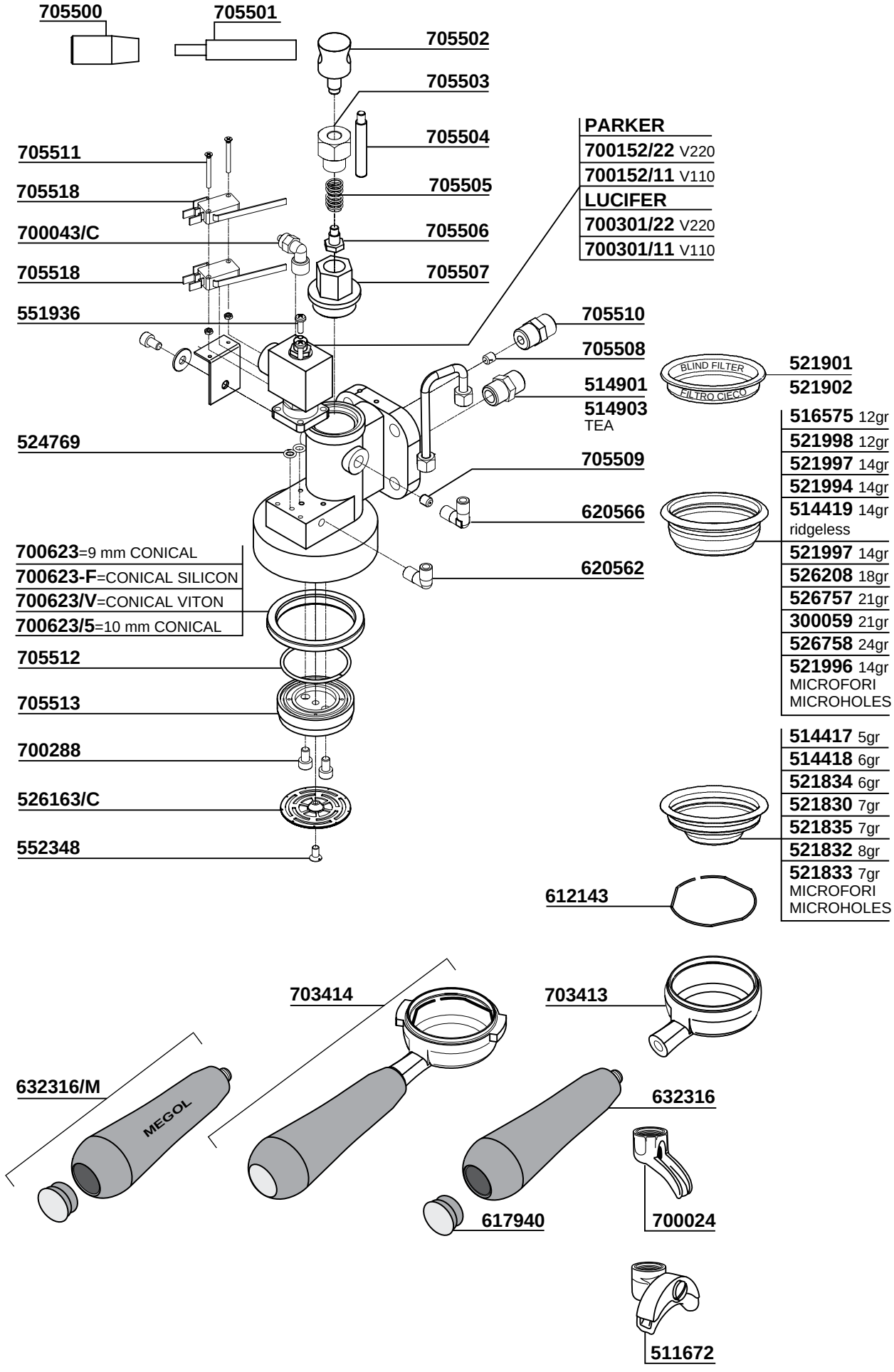
705500
705501
705502
705503
705504
705505
705506
705507
705511
705518
700043/C
705518
551936
705510
705508
514901
514903
TEA
524769
705509
620566
620562
700623=9 mm CONICAL
700623-F=CONICAL SILICON
700623/V=CONICAL VITON
700623/5=10 mm CONICAL
705512
705513
700288
526163/C
552348
PARKER
700152/22 V220
700152/11 V110
LUCIFER
700301/22 V220
700301/11 V110
BLIND FILTER
FILTRO CIECO
521901
521902
516575 12gr
521998 12gr
521997 14gr
521994 14gr
514419 14gr
ridgeless
521997 14gr
526208 18gr
526757 21gr
300059 21gr
526758 24gr
521996 14gr
MICROFORI
MICROHOLES
514417 5gr
514418 6gr
521834 6gr
521830 7gr
521835 7gr
521832 8gr
521833 7gr
MICROFORI
MICROHOLES
612143
703414
703413
632316/M
MEGOL
632316
617940
700024
511672

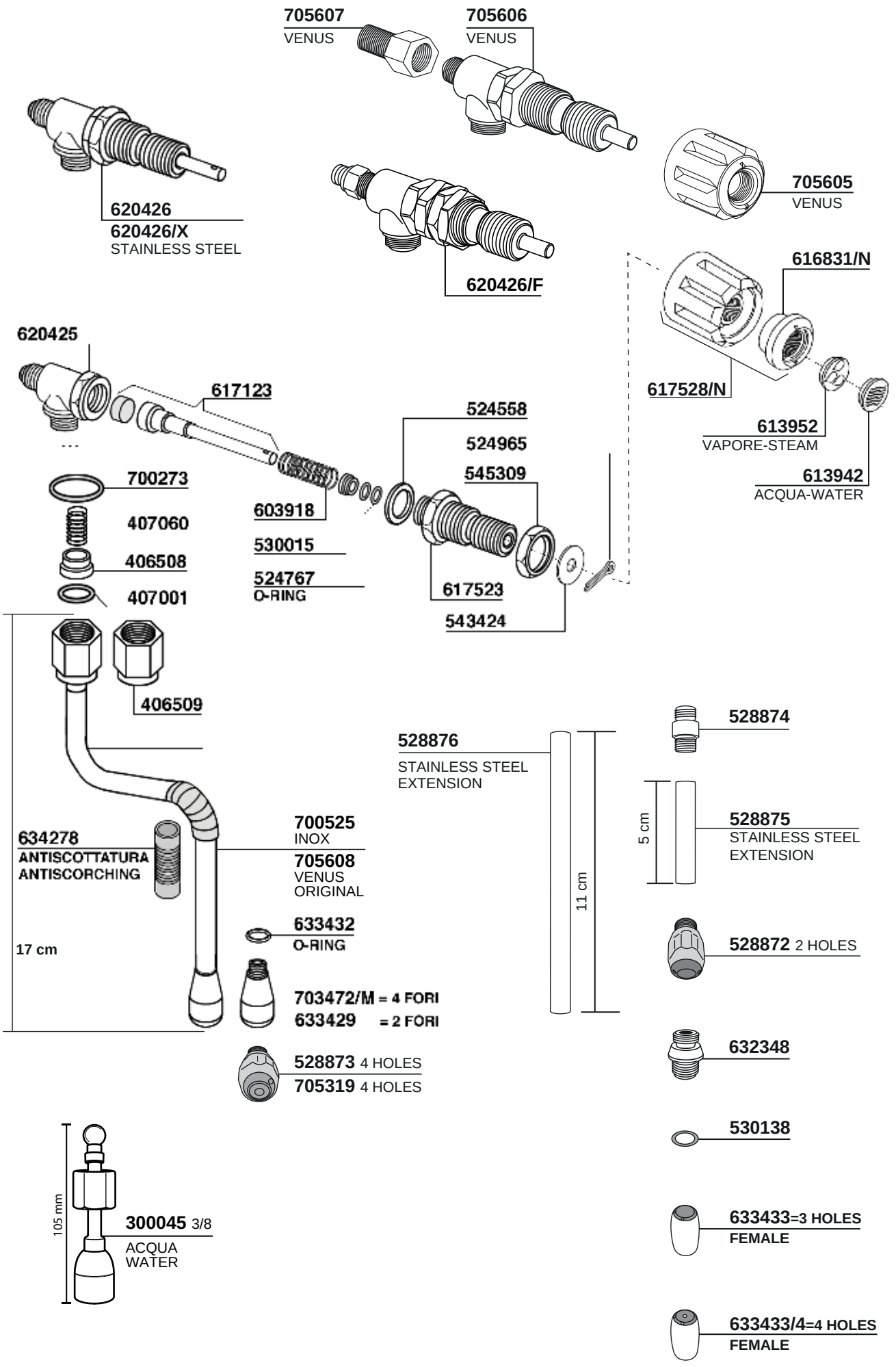
705607
VENUS
705606
VENUS
620426
620426/X
STAINLESS STEEL
620426/F
705605
VENUS
616831/N
620425
617123
524558
524965
545309
617528/N
613952
VAPORE-STEAM
613942
ACQUA-WATER
700273
407060
406508
407001
603918
530015
524767
O-RING
617523
543424
406509
528876
STAINLESS STEEL
EXTENSION
528874
5 cm
528875
STAINLESS STEEL
EXTENSION
11 cm
634278
ANTISCOTTATURA
ANTISCORCHING
700525
INOX
705608
VENUS
ORIGINAL
17 cm
633432
O-RING
528872 2 HOLES
703472/M = 4 FORI
633429 = 2 FORI
632348
528873 4 HOLES
705319 4 HOLES
530138
105 mm
300045 3/8
ACQUA
WATER
633433=3 HOLES
FEMALE
633433/4=4 HOLES
FEMALE

288

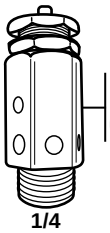

615623/A
CE certificato certified

524554

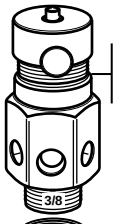

615624/A
CE certificato certified

524555



618968

524554

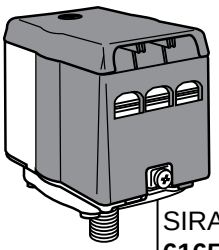

SIRAI
616592

620411=3/8F

524555

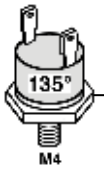

617991

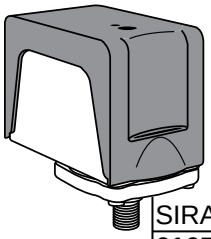

SIRAI
616597 CE/UL

705367
1/8 -1/4

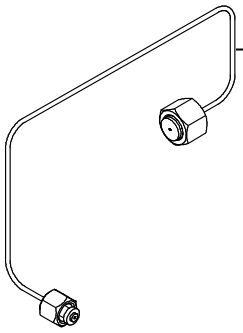

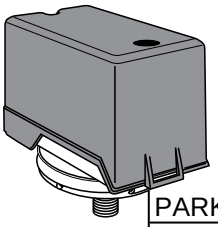

PARKER
616599 CE/UL

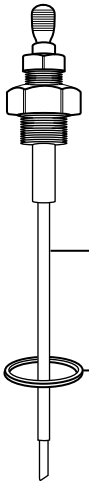

612601/L 140mm

524554

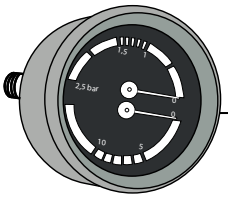

700874

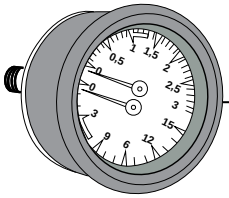

700411

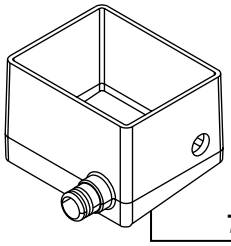

705321



705514

705515

705516

530134

703462

530134

705516

705515

705517

705515

700169/M

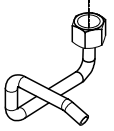



703456/T

703458 = GR2 W3000 V220/400 mm.340

BLACK EAGLE

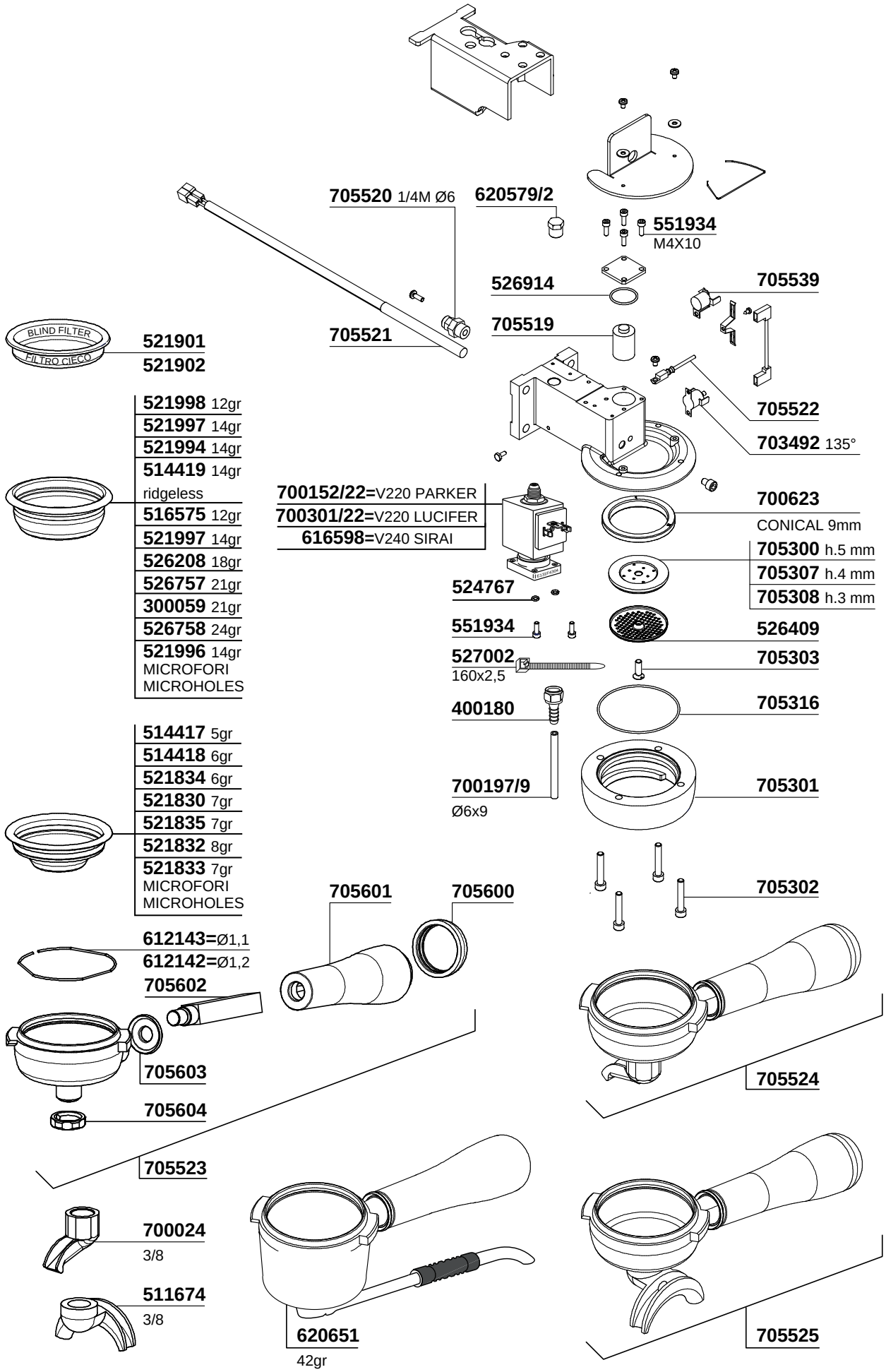
705520 1/4M Ø6
620579/2
551934 M4X10
526914
705539
705519
705521
705522
703492 135°
BLIND FILTER
FILTRO CIECO
521901
521902
521998 12gr
521997 14gr
521994 14gr
514419 14gr
ridgeless
516575 12gr
521997 14gr
526208 18gr
526757 21gr
300059 21gr
526758 24gr
521996 14gr
MICROFORI
MICROHOLES
700152/22=V220 PARKER
700301/22=V220 LUCIFER
616598=V240 SIRAI
700623
CONICAL 9mm
705300 h.5 mm
705307 h.4 mm
705308 h.3 mm
524767
551934
526409
527002
160x2,5
705303
400180
705316
700197/9
Ø6x9
705301
514417 5gr
514418 6gr
521834 6gr
521830 7gr
521835 7gr
521832 8gr
521833 7gr
MICROFORI
MICROHOLES
705302
705601
705600
612143=Ø1,1
612142=Ø1,2
705602
705603
705604
705524
705523
700024
3/8
511674
3/8
620651
42gr
705525

VICTORIA ARDUINO

Tav. 05

BLACK EAGLE

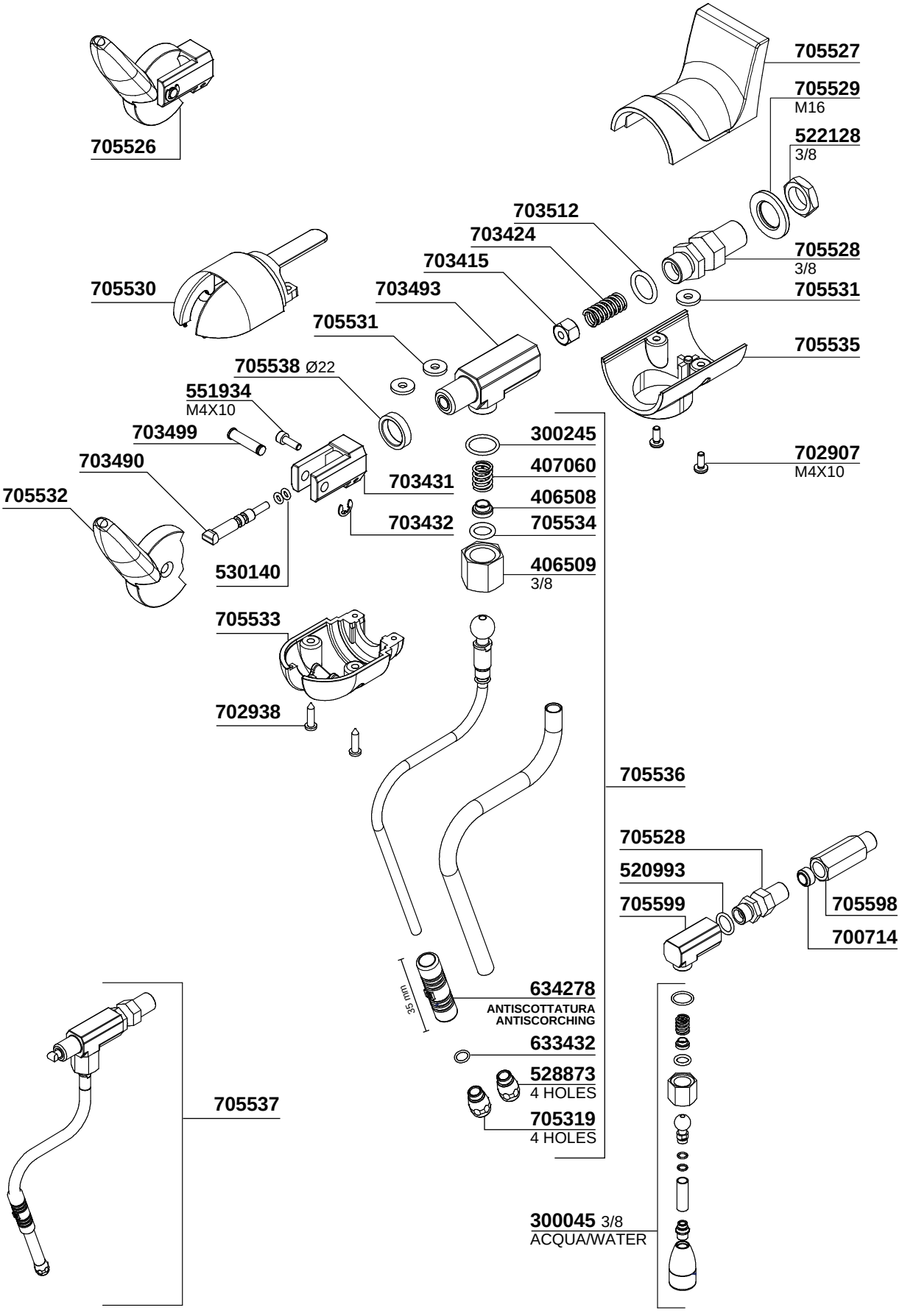

BLACK EAGLE

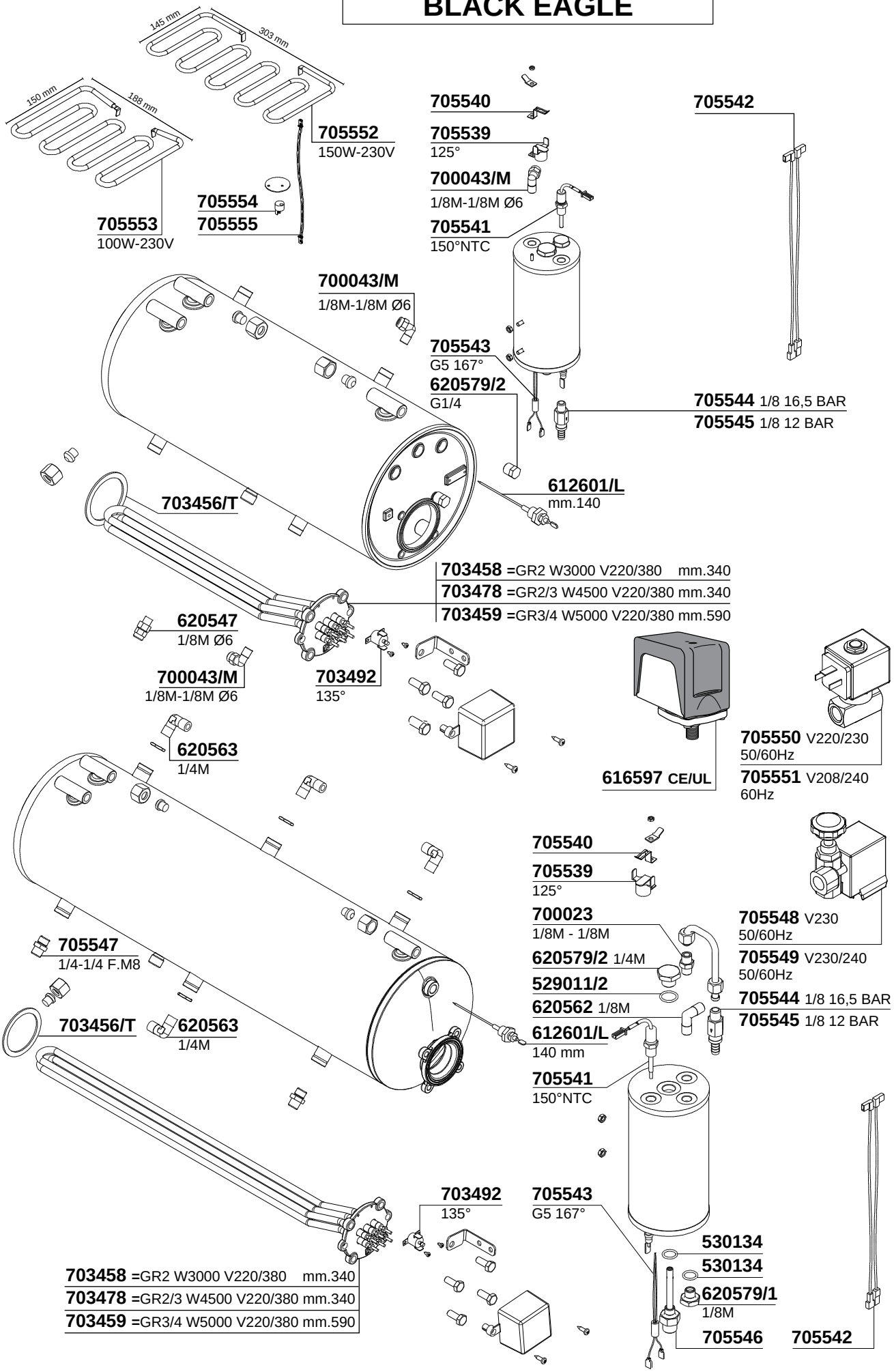
145 mm
303 mm
150 mm
188 mm
705552
150W-230V
705553
100W-230V
705554
705555
705540
705539
125°
700043/M
1/8M-1/8M Ø6
705541
150°NTC
705542
700043/M
1/8M-1/8M Ø6
705543
G5 167°
620579/2
G1/4
705544 1/8 16,5 BAR
705545 1/8 12 BAR
703456/T
612601/L
mm.140
703458 =GR2 W3000 V220/380 mm.340
703478 =GR2/3 W4500 V220/380 mm.340
703459 =GR3/4 W5000 V220/380 mm.590
620547
1/8M Ø6
700043/M
1/8M-1/8M Ø6
703492
135°
620563
1/4M
616597 CE/UL
705550 V220/230
50/60Hz
705551 V208/240
60Hz
705547
1/4-1/4 F.M8
703456/T
620563
1/4M
705540
705539
125°
700023
1/8M - 1/8M
620579/2 1/4M
529011/2
620562 1/8M
612601/L
140 mm
705541
150°NTC
705548 V230
50/60Hz
705549 V230/240
50/60Hz
705544 1/8 16,5 BAR
705545 1/8 12 BAR
703492
135°
705543
G5 167°
530134
530134
620579/1
1/8M
705546
705542
703458 =GR2 W3000 V220/380 mm.340
703478 =GR2/3 W4500 V220/380 mm.340
703459 =GR3/4 W5000 V220/380 mm.590

BLACK EAGLE

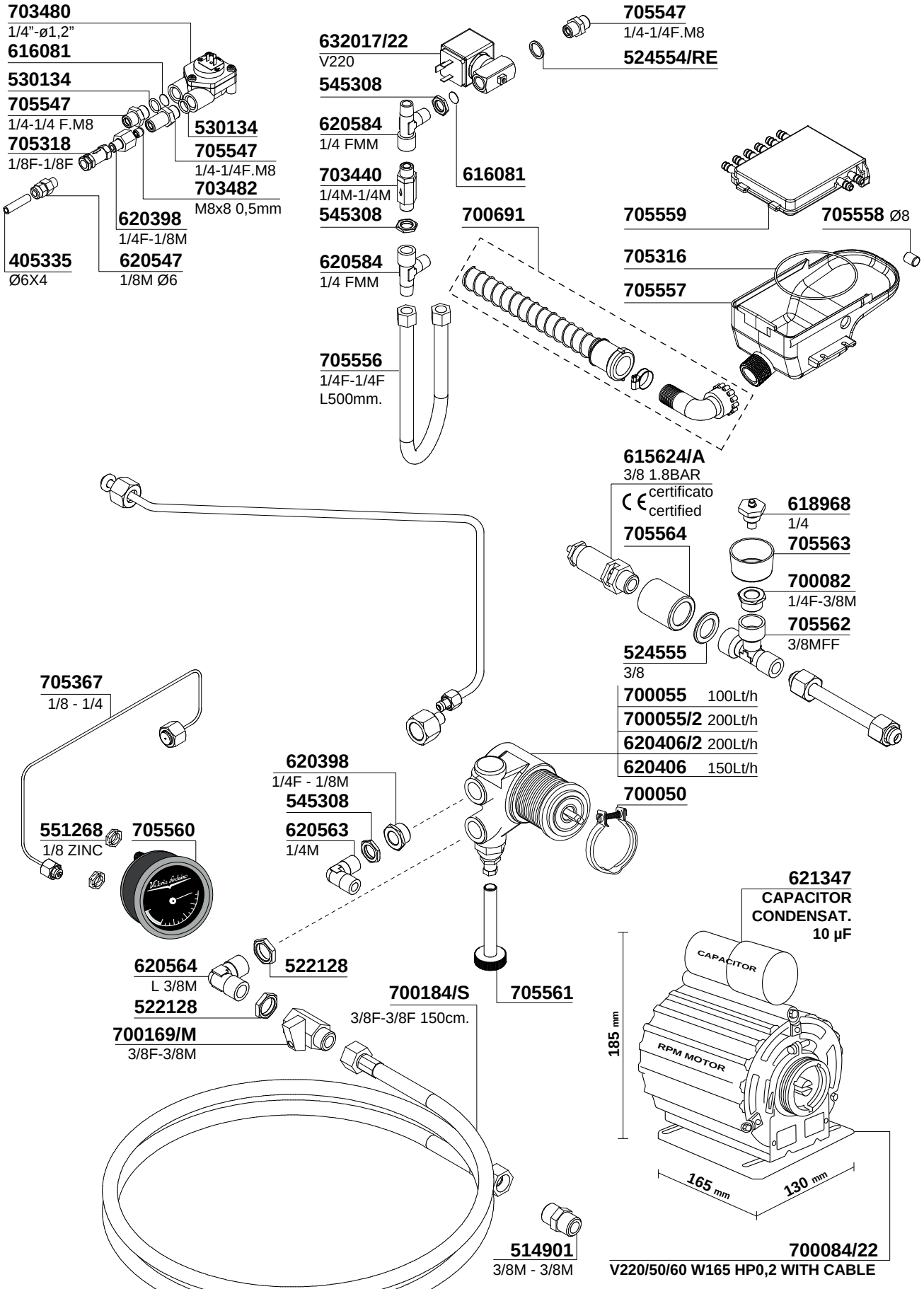
703480
1/4"-ø1,2"
616081
530134
705547
1/4-1/4 F.M8
705318
1/8F-1/8F
405335
Ø6X4
620398
1/4F-1/8M
620547
1/8M Ø6
530134
705547
1/4-1/4F.M8
703482
M8x8 0,5mm
632017/22
V220
545308
620584
1/4 FMM
703440
1/4M-1/4M
545308
620584
1/4 FMM
705556
1/4F-1/4F
L500mm.
705547
1/4-1/4F.M8
524554/RE
616081
700691
705559
705558 Ø8
705316
705557
615624/A
3/8 1.8BAR
certificato
certified
705564
618968
1/4
705563
700082
1/4F-3/8M
705562
3/8MFF
524555
3/8
700055 100Lt/h
700055/2 200Lt/h
620406/2 200Lt/h
620406 150Lt/h
700050
705367
1/8 - 1/4
620398
1/4F - 1/8M
545308
620563
1/4M
551268
1/8 ZINC
705560
620564
L 3/8M
522128
522128
700169/M
3/8F-3/8M
700184/S
3/8F-3/8F 150cm.
705561
514901
3/8M - 3/8M
621347
CAPACITOR
CONDENSAT.
10 µF
CAPACITOR
RPM MOTOR
185 mm
165 mm
130 mm
700084/22
V220/50/60 W165 HP0,2 WITH CABLE

BLACK EAGLE

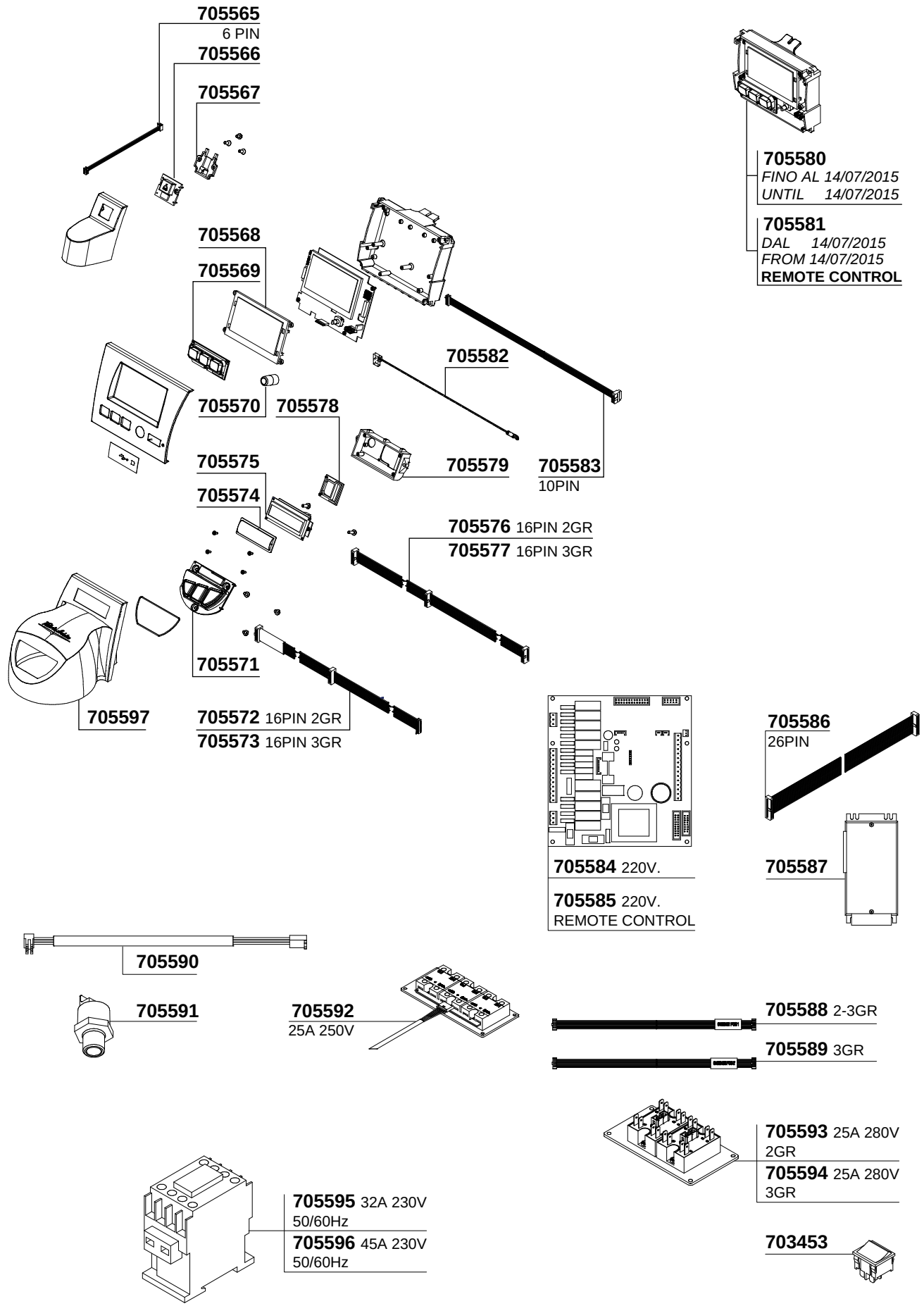
705565
6 PIN
705566
705567
705568
705569
705570
705578
705582
705575
705574
705579
705583
10PIN
705576 16PIN 2GR
705577 16PIN 3GR
705571
705597
705572 16PIN 2GR
705573 16PIN 3GR
705580
FINO AL 14/07/2015
UNTIL 14/07/2015
705581
DAL 14/07/2015
FROM 14/07/2015
REMOTE CONTROL
705584 220V.
705585 220V.
REMOTE CONTROL
705586
26PIN
705587
705590
705591
705592
25A 250V
705588 2-3GR
705589 3GR
705593 25A 280V
2GR
705594 25A 280V
3GR
705595 32A 230V
50/60Hz
705596 45A 230V
50/60Hz
703453

294

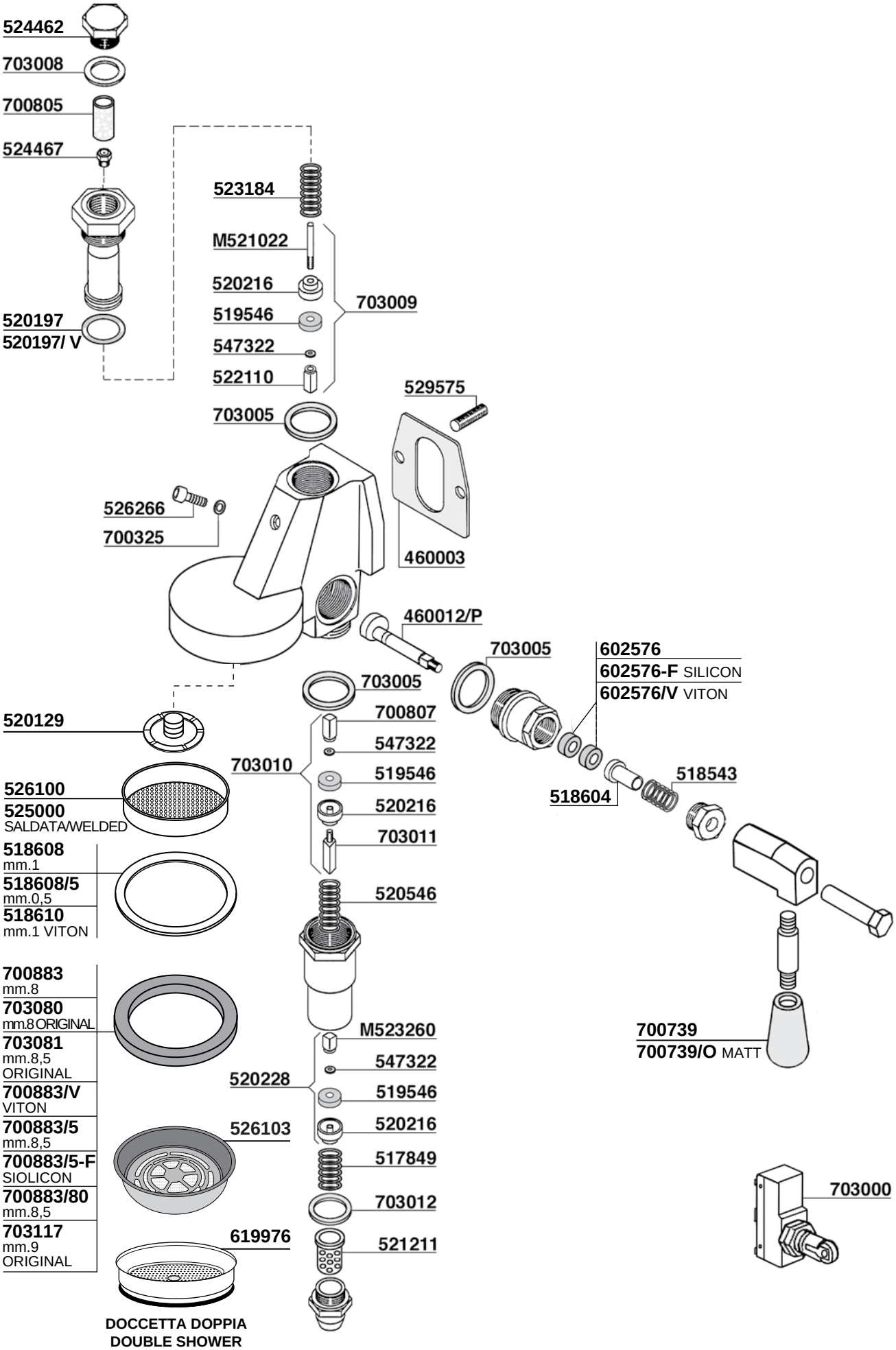
524462
703008
700805
524467
520197
520197/ V
523184
M521022
520216
519546
547322
522110
703009
703005
529575
526266
700325
460003
460012/P
703005
602576
602576-F SILICON
602576/V VITON
703005
700807
547322
519546
520216
703011
703010
518543
518604
520129
526100
525000
SALDATA/WELDED
518608
mm.1
518608/5
mm.0,5
518610
mm.1 VITON
520546
700883
mm.8
703080
mm.8 ORIGINAL
703081
mm.8,5
ORIGINAL
700883/V
VITON
700883/5
mm.8,5
700883/5-F
SIOLICON
700883/80
mm.8,5
703117
mm.9
ORIGINAL
M523260
547322
519546
520216
520228
526103
517849
703012
619976
521211
700739
700739/O MATT
703000
DOCCETTA DOPPIA
DOUBLE SHOWER

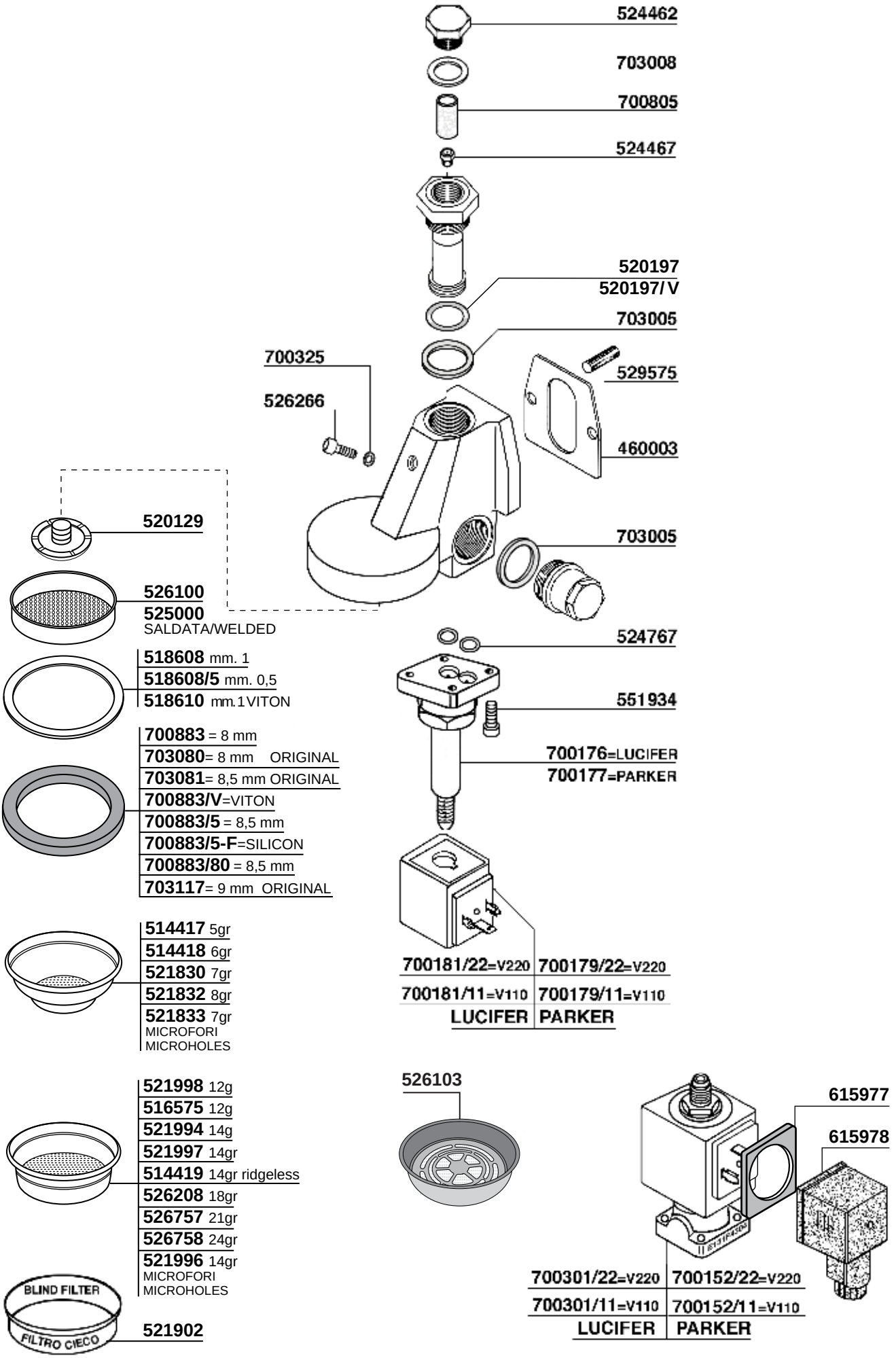
524462
703008
700805
524467
520197
520197/V
703005
700325
526266
529575
460003
703005
520129
526100
525000
SALDATA/WELDED
518608 mm. 1
518608/5 mm. 0,5
518610 mm.1 VITON
700883 = 8 mm
703080= 8 mm ORIGINAL
703081= 8,5 mm ORIGINAL
700883/V=VITON
700883/5 = 8,5 mm
700883/5-F=SILICON
700883/80 = 8,5 mm
703117= 9 mm ORIGINAL
524767
551934
700176=LUCIFER
700177=PARKER
700181/22=V220
700179/22=V220
700181/11=V110
700179/11=V110
LUCIFER
PARKER
514417 5gr
514418 6gr
521830 7gr
521832 8gr
521833 7gr
MICROFORI
MICROHOLES
526103
521998 12g
516575 12g
521994 14g
521997 14gr
514419 14gr ridgeless
526208 18gr
526757 21gr
526758 24gr
521996 14gr
MICROFORI
MICROHOLES
615977
615978
700301/22=V220
700152/22=V220
700301/11=V110
700152/11=V110
LUCIFER
PARKER
BLIND FILTER
FILTRO CIECO
521902

VENERE

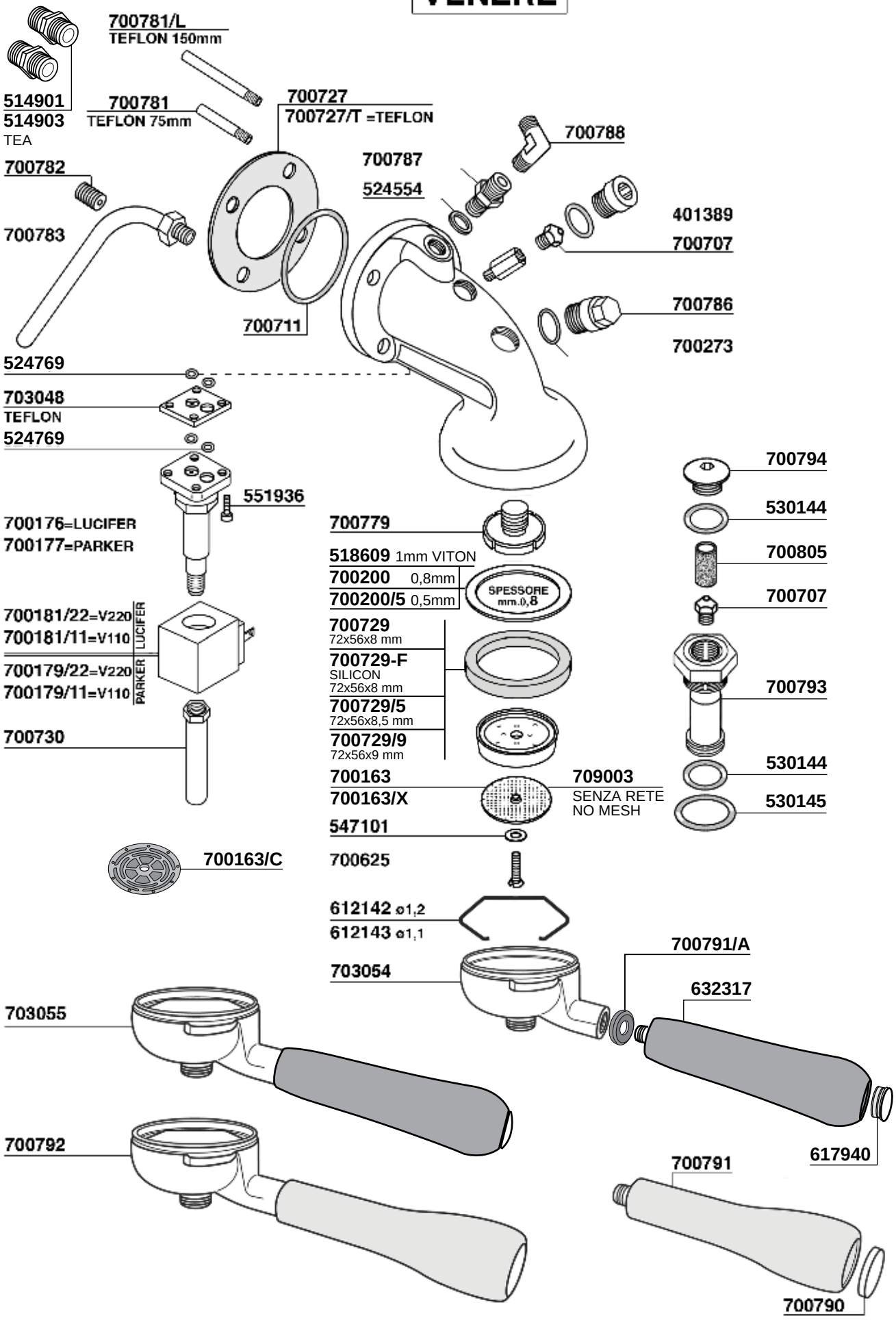
700781/L
TEFLON 150mm
514901
514903
TEA
700781
TEFLON 75mm
700727
700727/T =TEFLON
700788
700787
524554
401389
700707
700782
700783
700786
700273
700711
524769
703048
TEFLON
524769
700794
530144
551936
700805
700176=LUCIFER
700177=PARKER
700779
518609 1mm VITON
700200 0,8mm
700200/5 0,5mm
SPESSORE mm.0,8
700707
700181/22=V220
700181/11=V110
LUCIFER
700729
72x56x8 mm
700729-F
SILICON
72x56x8 mm
700793
700179/22=V220
700179/11=V110
PARKER
700729/5
72x56x8,5 mm
700729/9
72x56x9 mm
700730
700163
700163/X
709003
SENZA RETE
NO MESH
530144
530145
547101
700163/C
700625
612142 ø1,2
612143 ø1,1
700791/A
703054
632317
703055
617940
700792
700791
700790

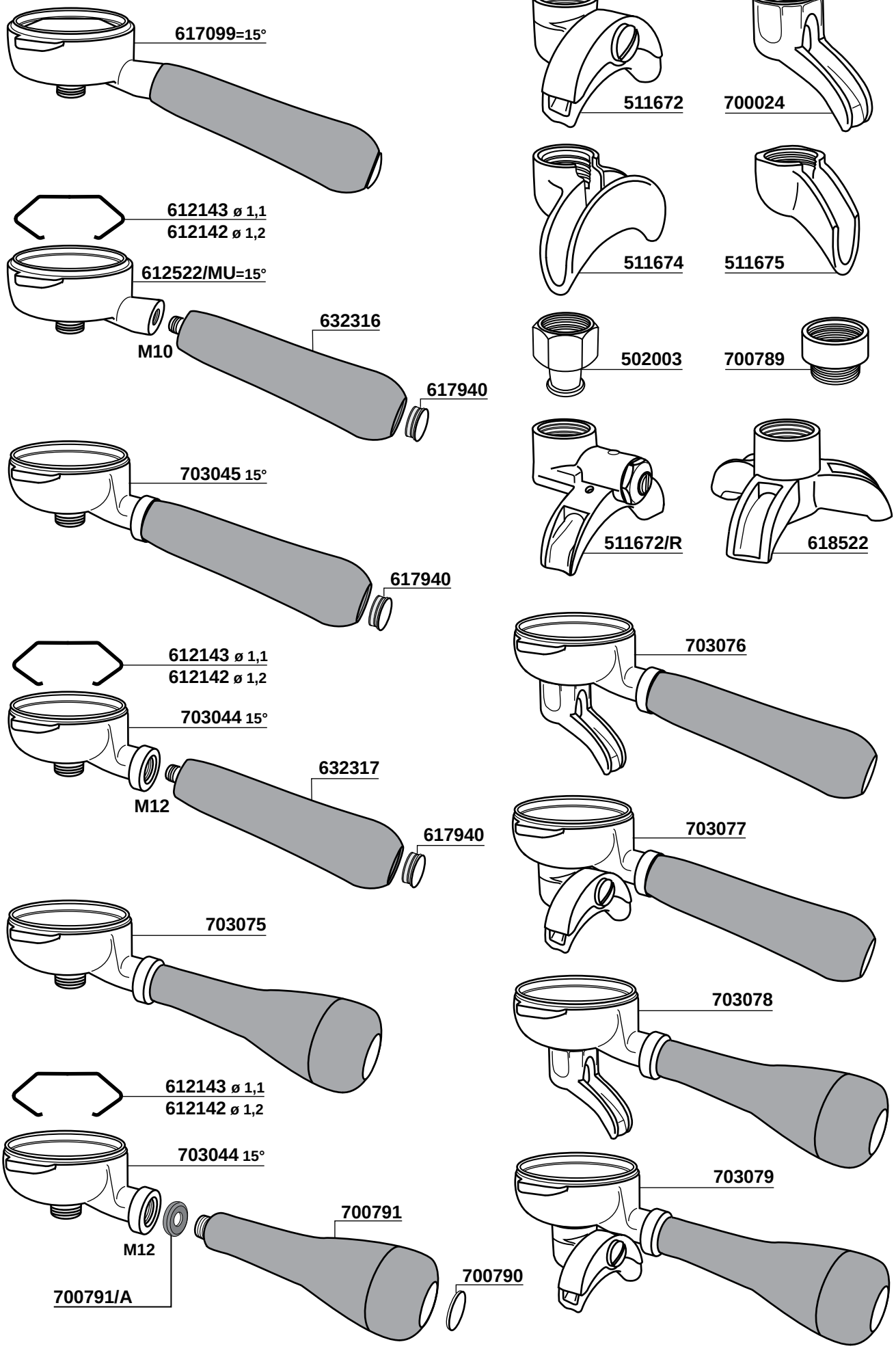
617099=15°
612143 ø 1,1
612142 ø 1,2
612522/MU=15°
632316
M10
617940
703045 15°
617940
612143 ø 1,1
612142 ø 1,2
703044 15°
632317
M12
617940
703075
612143 ø 1,1
612142 ø 1,2
703044 15°
700791
M12
700791/A
700790
511672
700024
511674
511675
502003
700789
511672/R
618522
703076
703077
703078
703079

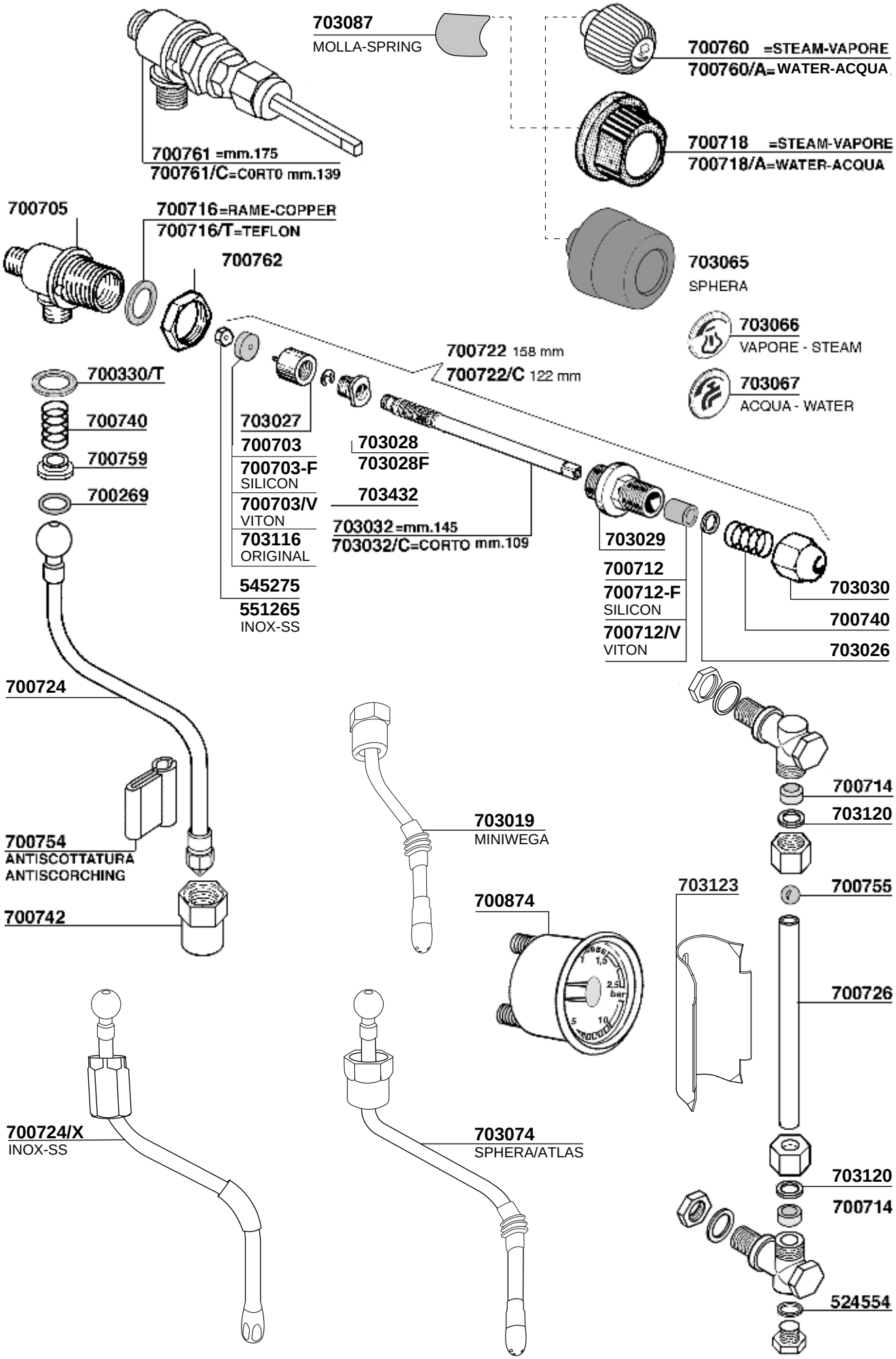
703087
MOLLA-SPRING
700760 =STEAM-VAPORE
700760/A=WATER-ACQUA
700718 =STEAM-VAPORE
700718/A=WATER-ACQUA
700761 =mm.175
700761/C=CORTO mm.139
703065
SPHERA
703066
VAPORE - STEAM
703067
ACQUA - WATER
700705
700716=RAME-COPPER
700716/T=TEFLON
700762
700722 158 mm
700722/C 122 mm
700330/T
700740
700759
700269
703027
700703
700703-F
SILICON
700703/V
VITON
703116
ORIGINAL
545275
551265
INOX-SS
703028
703028F
703432
703032=mm.145
703032/C=CORTO mm.109
703029
700712
700712-F
SILICON
700712/V
VITON
703030
700740
703026
700724
700754
ANTISCOTTATURA
ANTISCORCHING
700742
703019
MINIWEGA
700874
700714
703120
703123
700755
700726
703120
700714
524554
700724/X
INOX-SS
703074
SPHERA/ATLAS

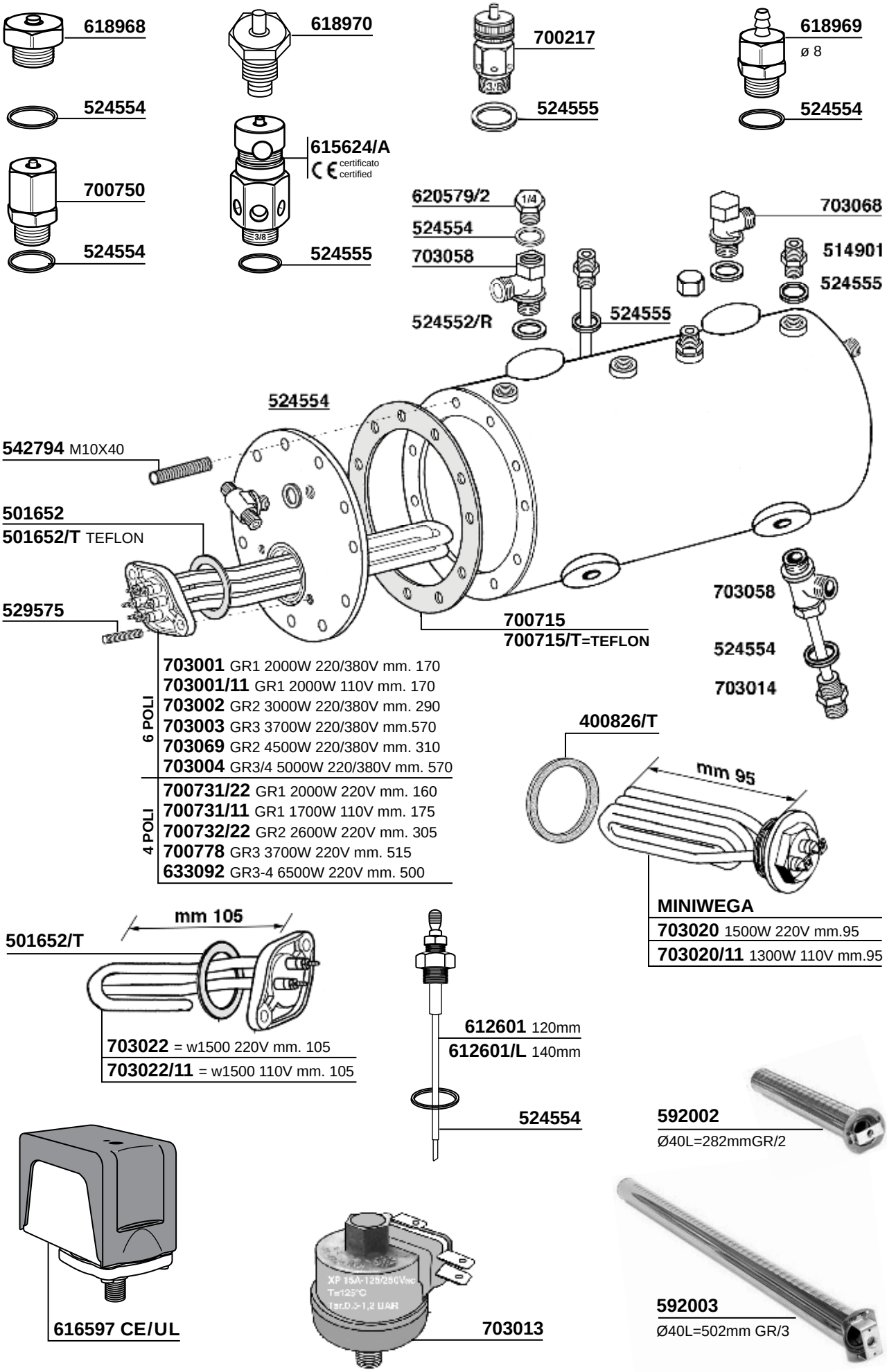
618968
524554
700750
524554
618970
615624/A
certificato
certified
3/8
524555
700217
3/8
524555
618969
ø 8
524554
620579/2
1/4
524554
703058
524552/R
524555
703068
514901
524555
524554
542794 M10X40
501652
501652/T TEFLON
529575
700715
700715/T=TEFLON
703058
524554
703014
6 POLI
703001 GR1 2000W 220/380V mm. 170
703001/11 GR1 2000W 110V mm. 170
703002 GR2 3000W 220/380V mm. 290
703003 GR3 3700W 220/380V mm.570
703069 GR2 4500W 220/380V mm. 310
703004 GR3/4 5000W 220/380V mm. 570
4 POLI
700731/22 GR1 2000W 220V mm. 160
700731/11 GR1 1700W 110V mm. 175
700732/22 GR2 2600W 220V mm. 305
700778 GR3 3700W 220V mm. 515
633092 GR3-4 6500W 220V mm. 500
400826/T
mm 95
MINIWEGA
703020 1500W 220V mm.95
703020/11 1300W 110V mm.95
mm 105
501652/T
703022 = w1500 220V mm. 105
703022/11 = w1500 110V mm. 105
612601 120mm
612601/L 140mm
524554
592002
Ø40L=282mmGR/2
616597 CE/UL
703013
592003
Ø40L=502mm GR/3

300

MOTORE RAFFREDDATO AD ACQUA - MOTOR WATERCOOL

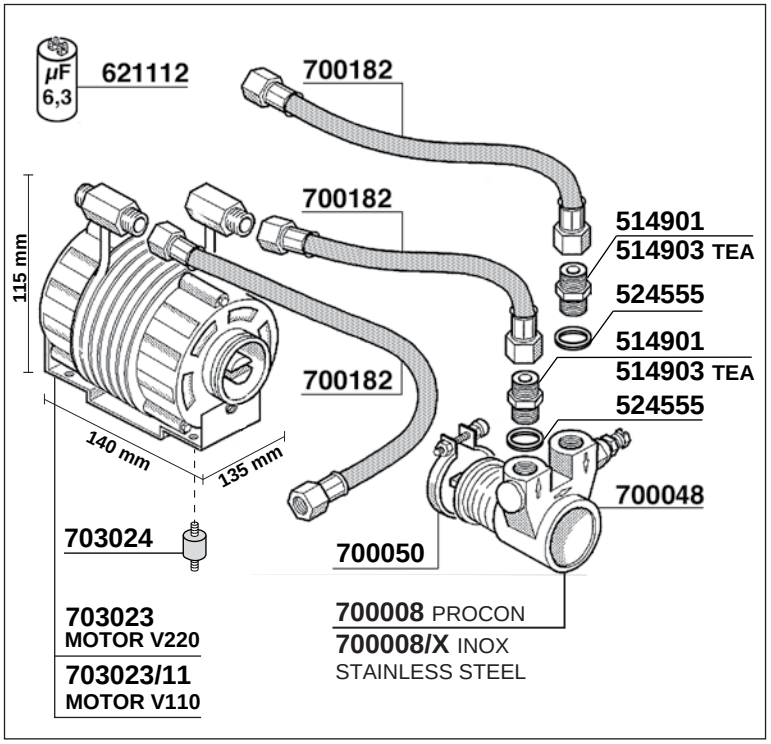

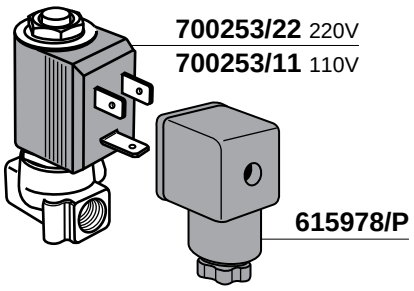

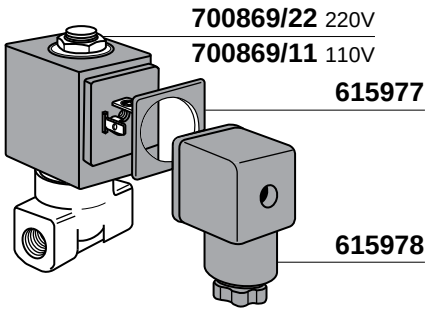

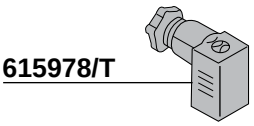





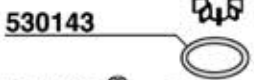

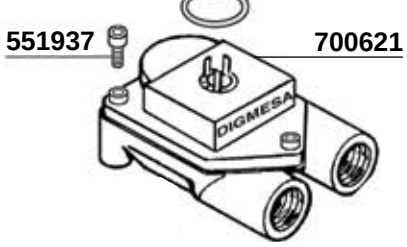

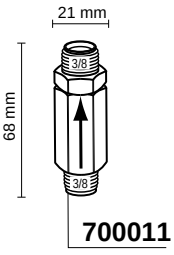

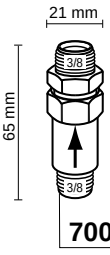

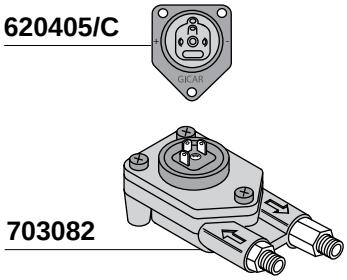



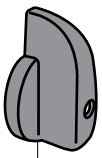

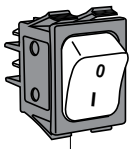

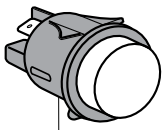

703059
CROMATO
CHROME PLATED

703056
703056/V=VITON





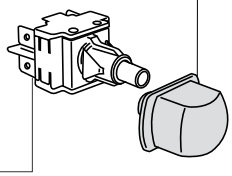

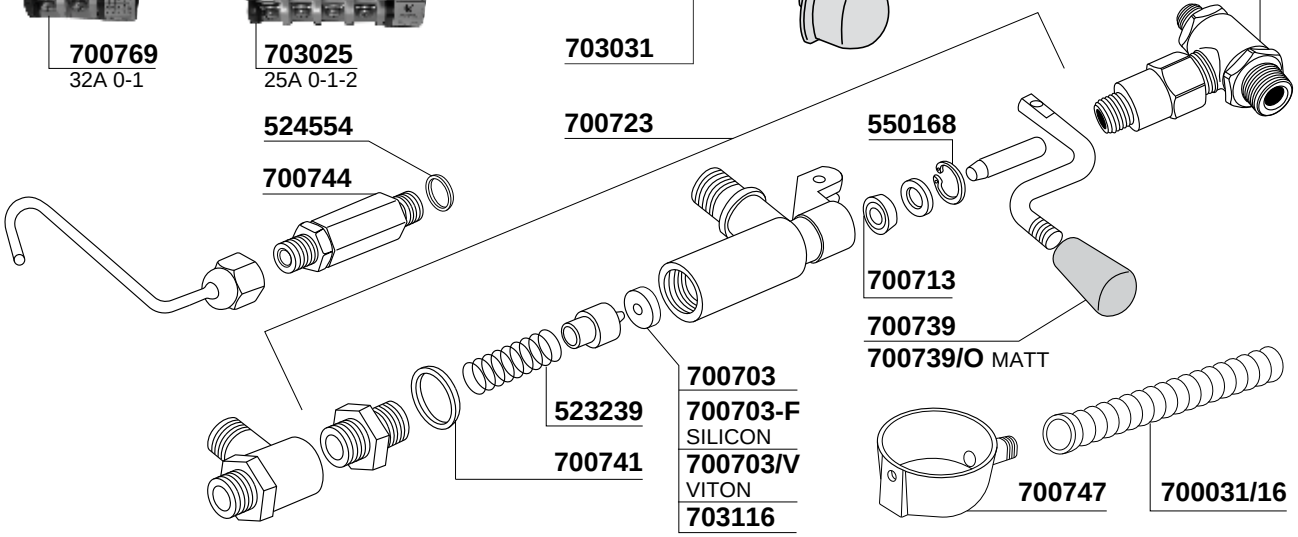

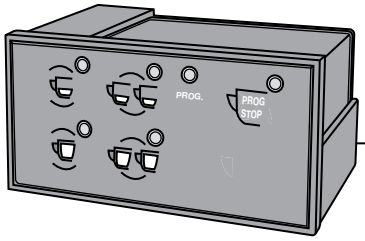

703015

PULSANTIERA + CENTRALINA
TOUCHPAD + ELECTRONIC BOX

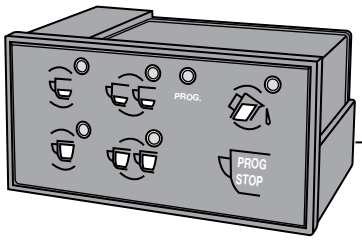

703016

PULSANTIERA
TOUCHPAD

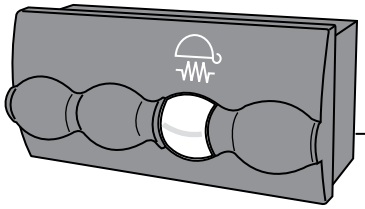

703060
SPHERA

PULSANTIERA SCALDATAZZE
CUP WARMER TOUCHPAD

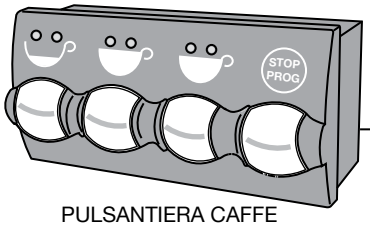

703061
SPHERA EVD

PULSANTIERA CAFFE
COFFEE TOUCHPAD

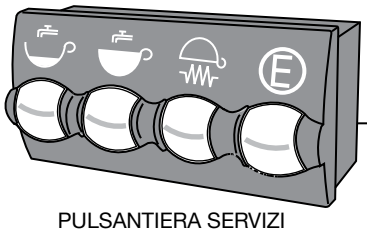

703062
SPHERA

PULSANTIERA SERVIZI
SERVICE TOUCHPAD

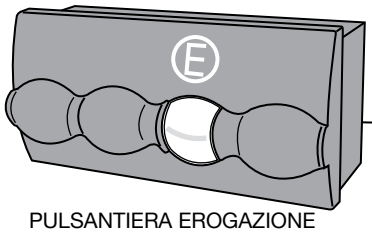

703064
SPHERA

PULSANTIERA EROGAZIONE
1 BREW TOUCHPAD

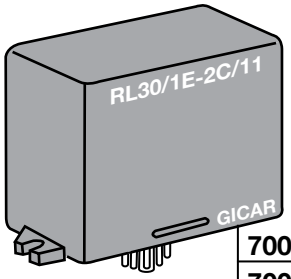

700574 220V
700574/11 110V

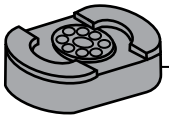

401920

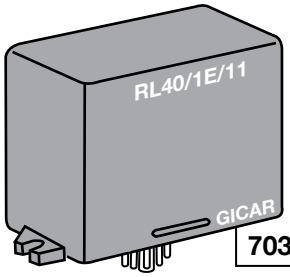

703017 220V

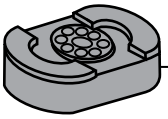

401920

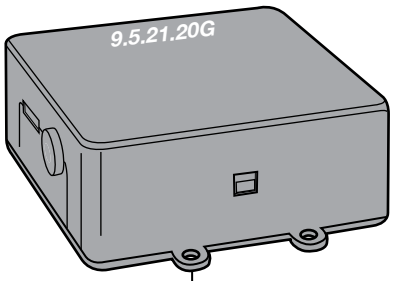

703073

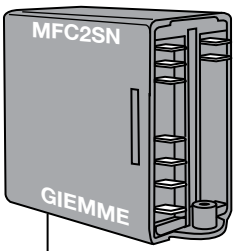

703018 V220
MINIWEGA

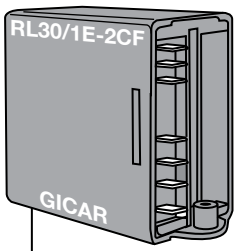

700737 V220
700737/11 V110
703063 WITH TIME OUT

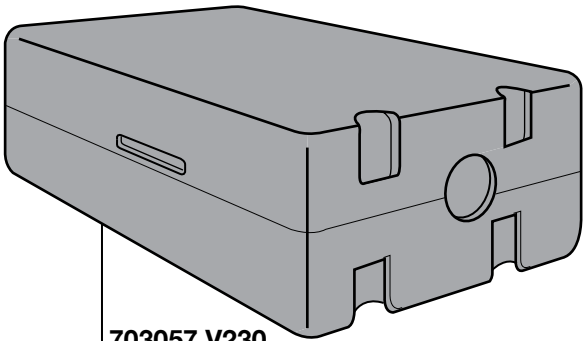

703057 V230
703057/11 V110
CENTRALINA SPHERA EVD GR1-2-3
ELECTRONIC BOX SPHERA EVD GR1-2-3

302

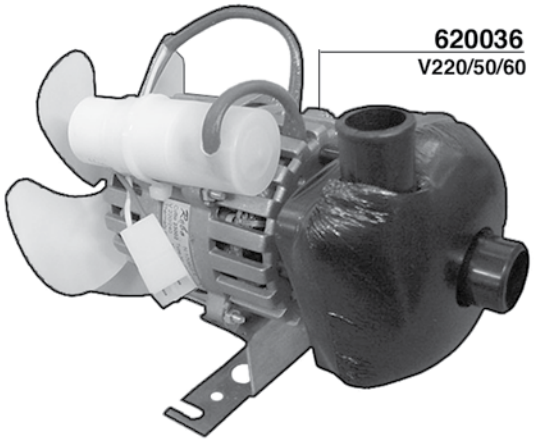

620036
V220/50/60

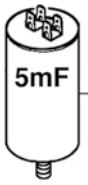

616231



620044

TERM.EVAPORATORE

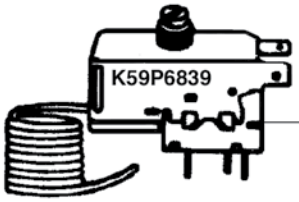

620037

620047

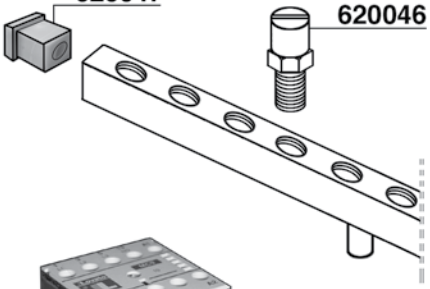

620046

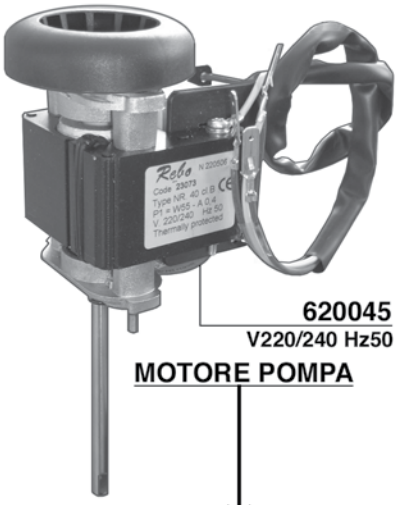

620045
V220/240 Hz50

MOTORE POMPA

TERM. CONTENITORE

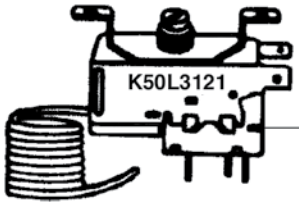

620038



702307=V220
702309=V110
TELERUTTORE
PICCOLO BG09

PRESSOSTATO

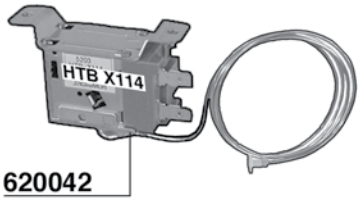

620042

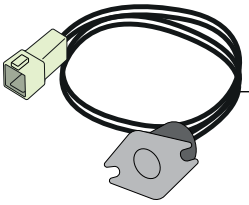

620039

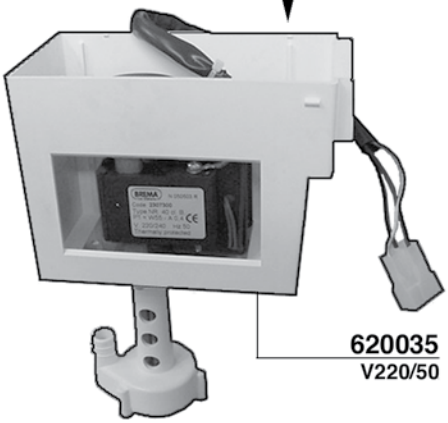

620035
V220/50

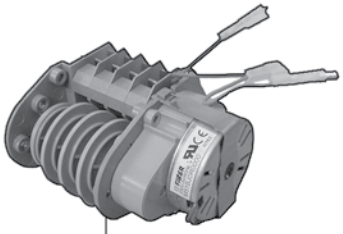

620041
TIMER 12' V220/50/60

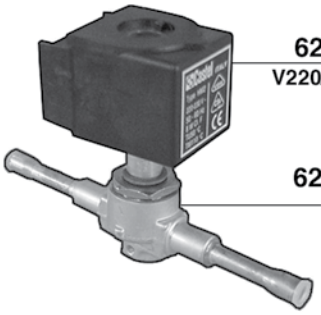

622608
V220/50/60

620043

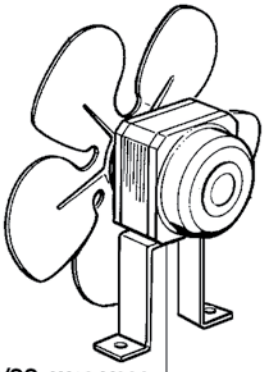

620023/22=W10 V220
620024/22=W5 V220

V220/50/60

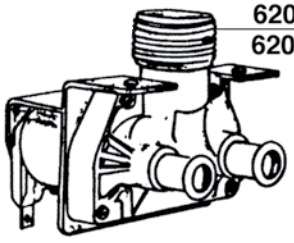

620040=LT.2,5-2,5
620050=LT.0.8-0,8

V220/50/60

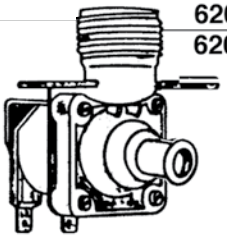

620048=LT.0,8
620049=LT.1,2

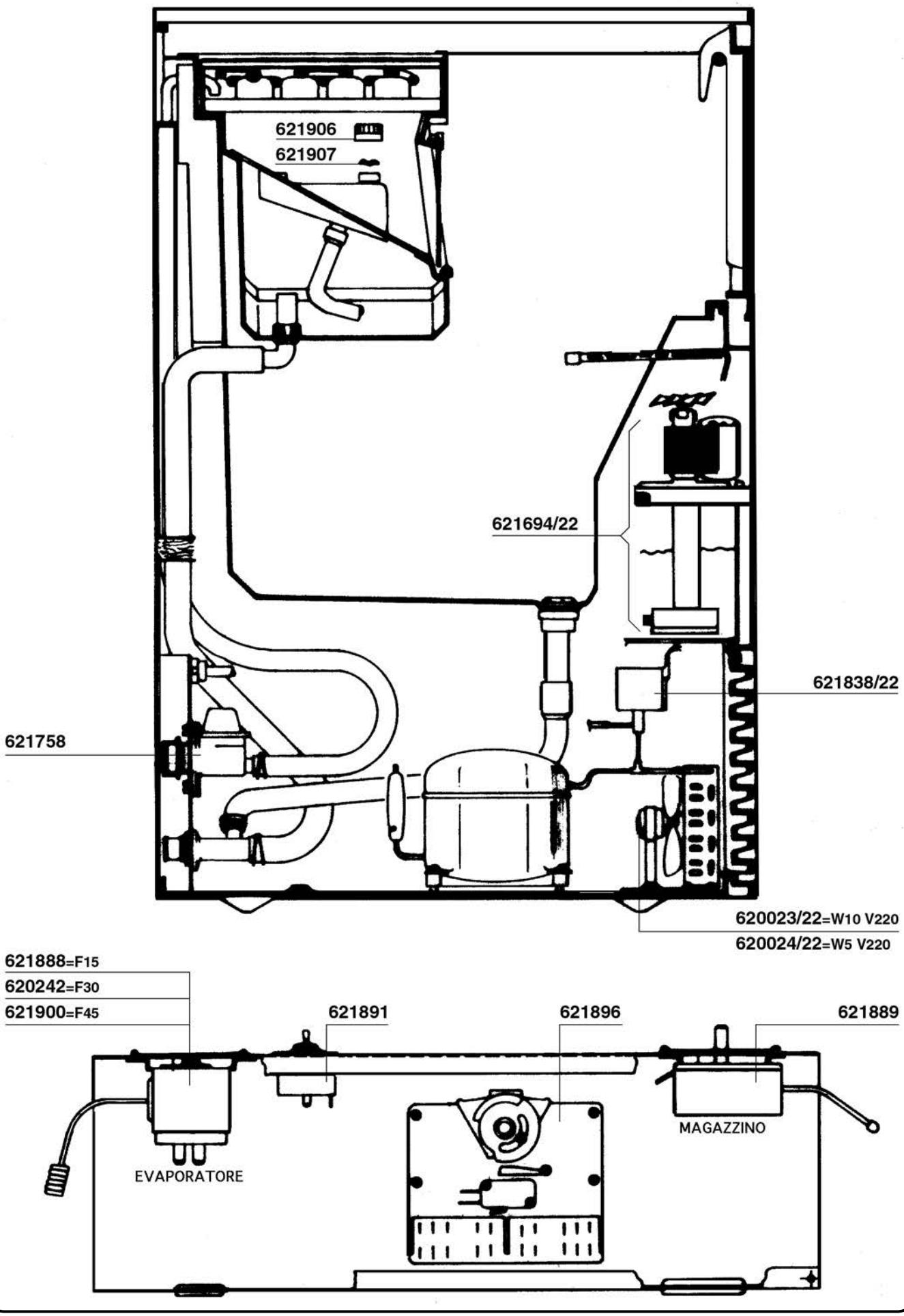
621906
621907
621694/22
621838/22
621758
620023/22=W10 V220
620024/22=W5 V220
621888=F15
620242=F30
621900=F45
621891
621896
621889
EVAPORATORE
MAGAZZINO

304

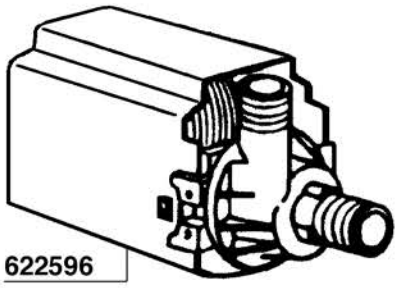
622596

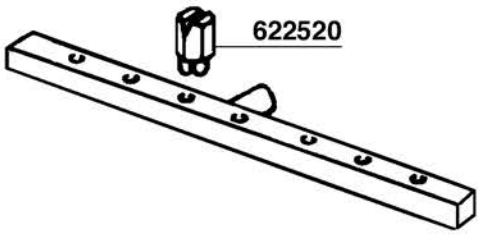
622520

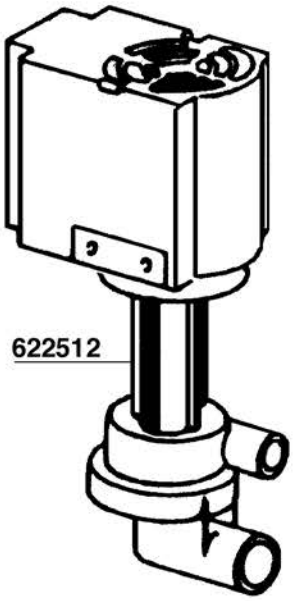
622512

622619/F


TIMER 1 CAMME 2 MICRO 15'

TERM.EVAPORATORE

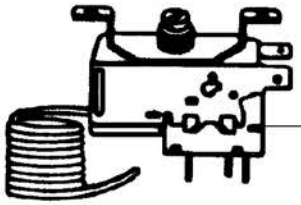
622620

TERM.MAGAZZINO 1aSERIE

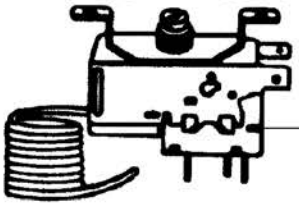
620032

CASTEL V220

622608

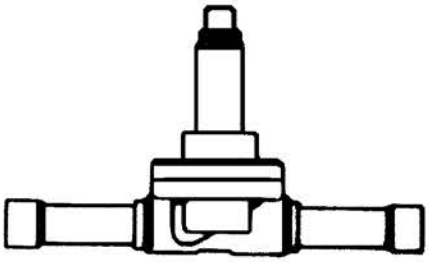

TERM.MAGAZZINO 2aSERIE

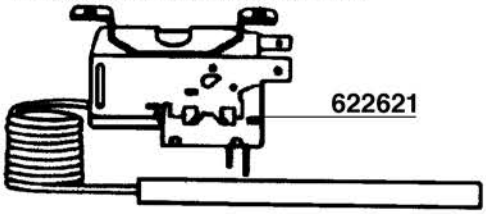
622621

PRESSOSTATO

622618

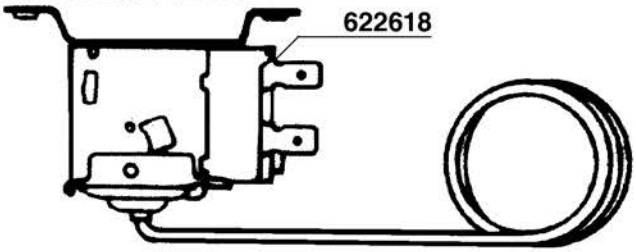

TERM.CONDENSATORE

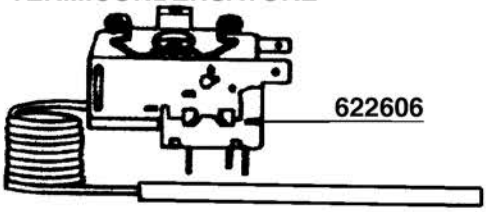
622606

700609=1,5LT/M
700612=0,7LT/M

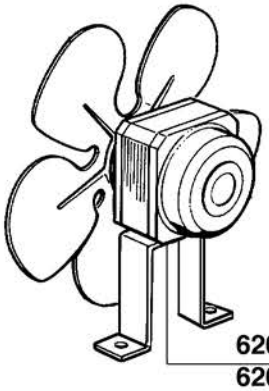
620023/22=W10 V220
620024/22=W5 V220

621758

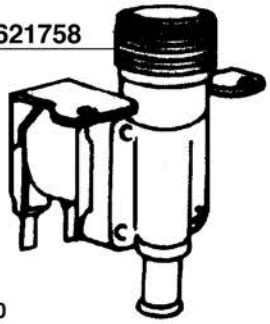

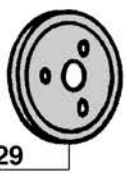
700129

615149

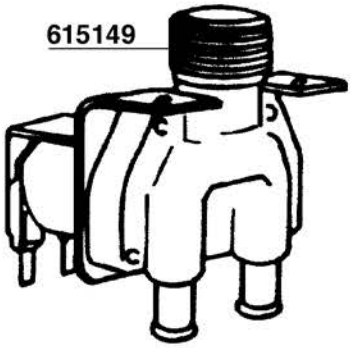

DEPURATORI SERIE LT - IV

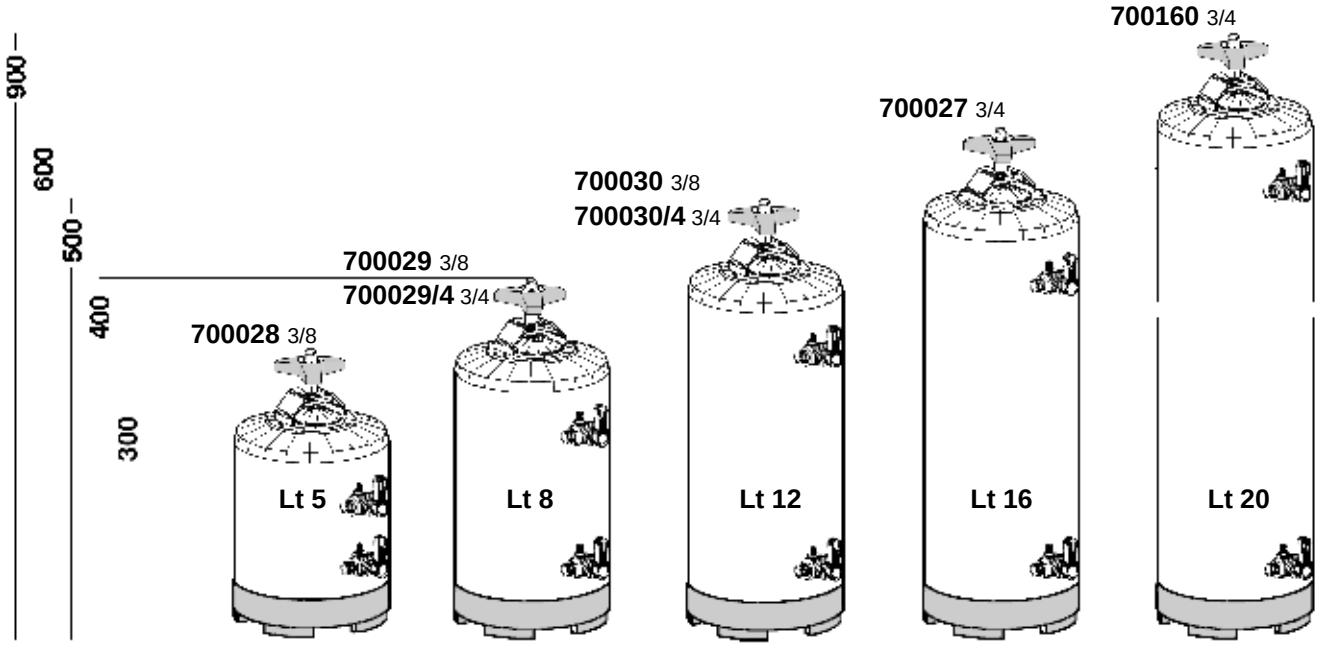

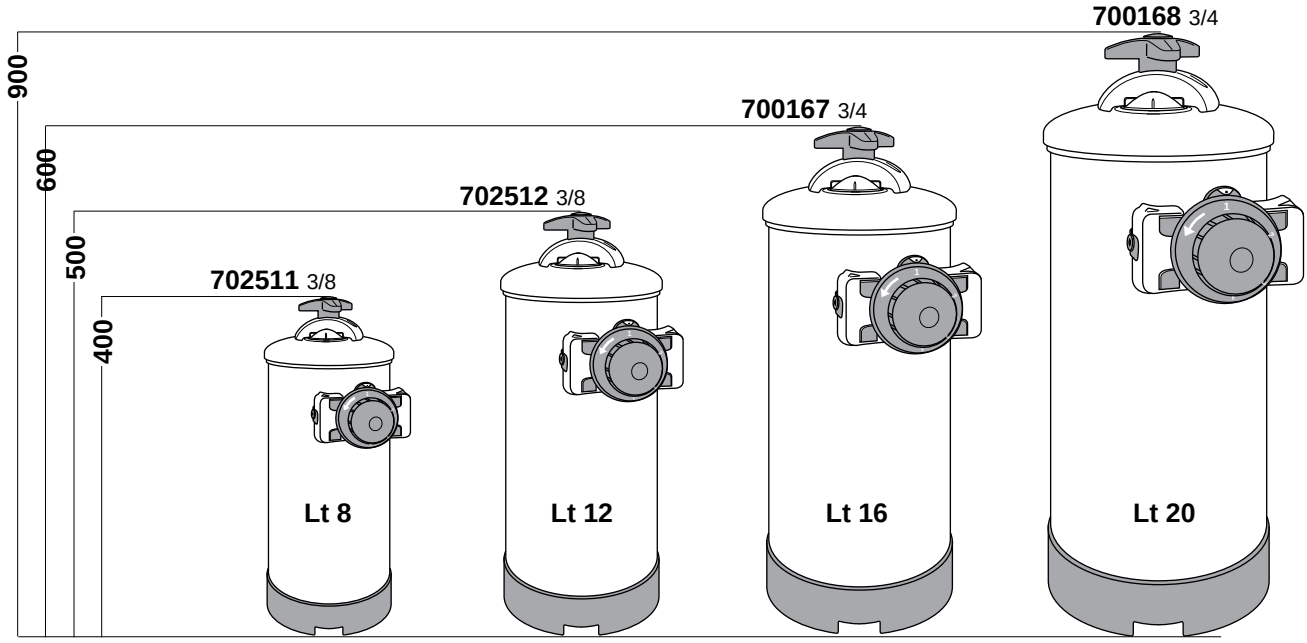

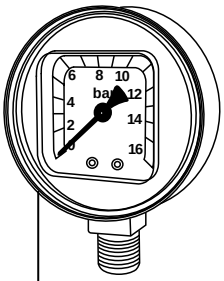

300302 16BAR

manometro consigliato per 620392
suggested manometer for 620392

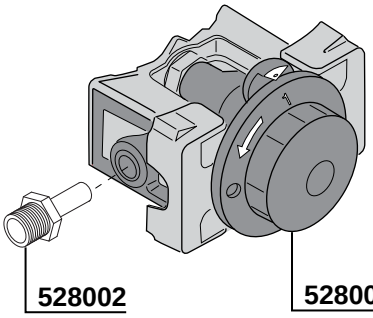

528002

528001

517717



NUOVO TAPPO PLASTICA
NEW PLASTIC CAP

INTERCAMBIABILE
INTERCHANGEABLE



528812



620571 =1/4 MF

per collegare 300302 e 620392
for connect 300302 and 620392

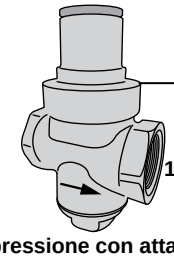

620392

riduttore pressione con attacco manometro
pressure reducer with manometer connection

620400

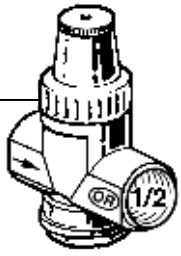

riduttore pressione
pressure reducer

DEPURATORI SERIE ERA

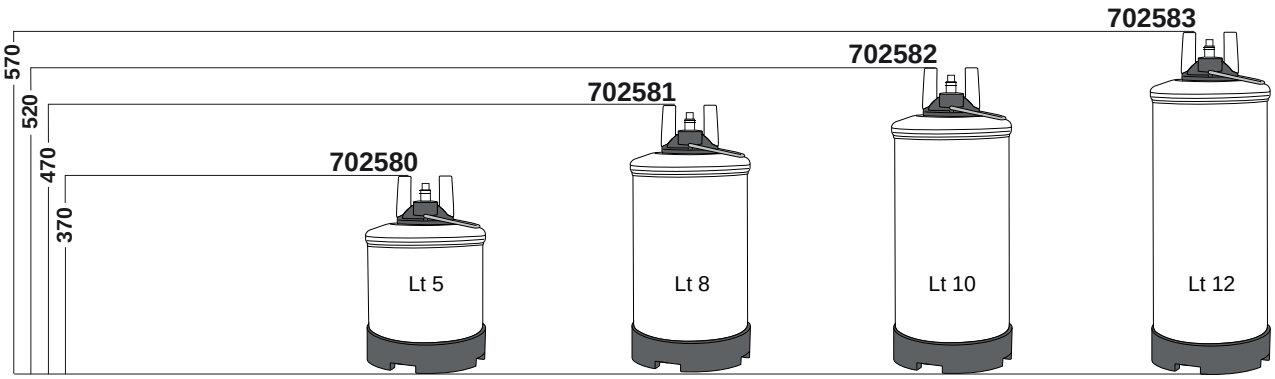

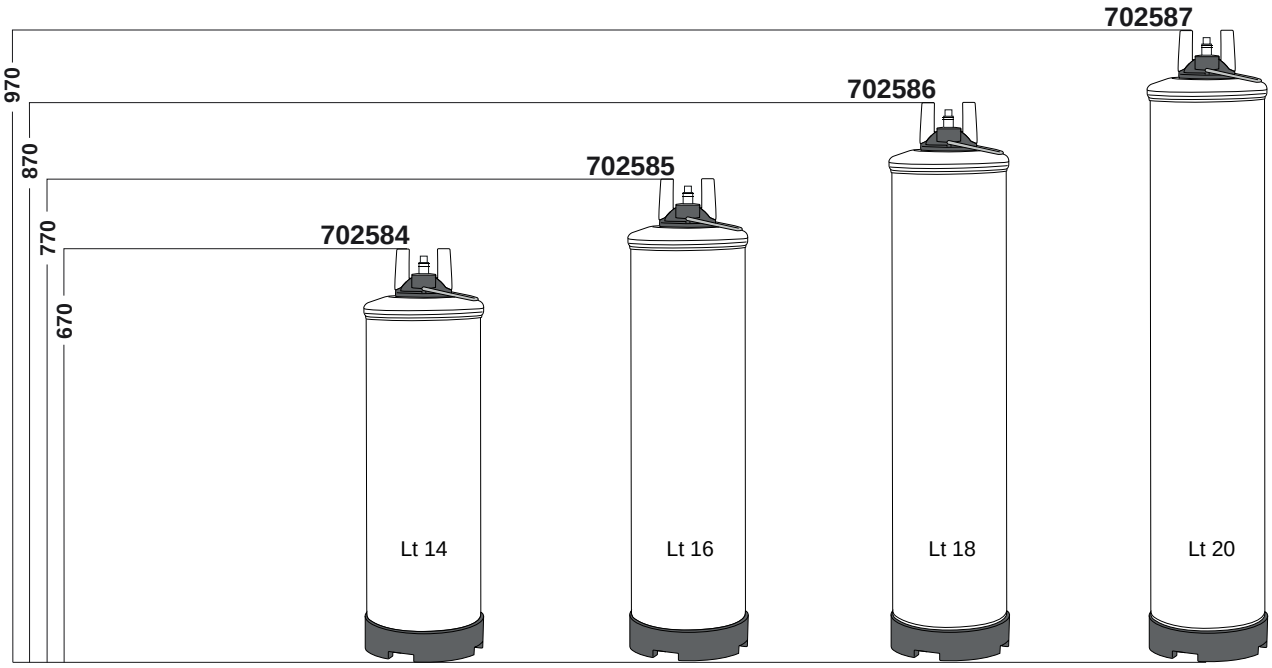

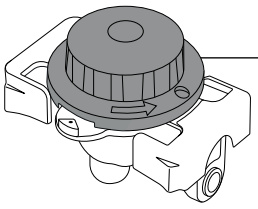

702577 3/8"G

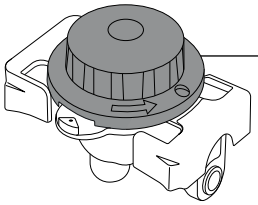

702578 3/4"G

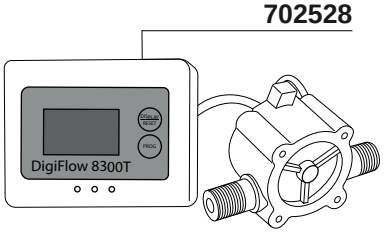

702528

702588

SISTEMA DI RIGENERAZIONE ERA
REGENERATION SYSTEM ERA

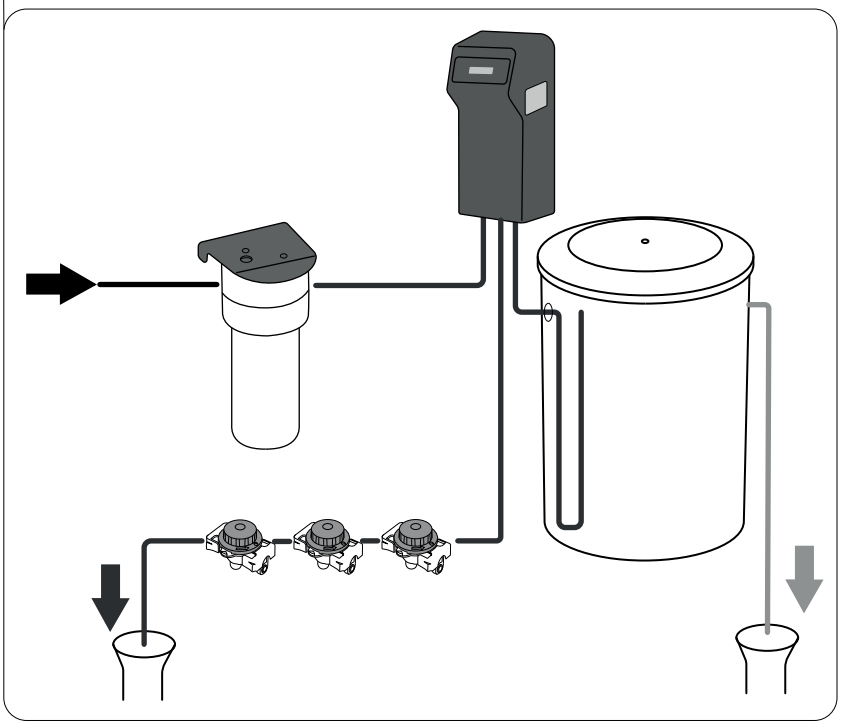

DEPURATORI

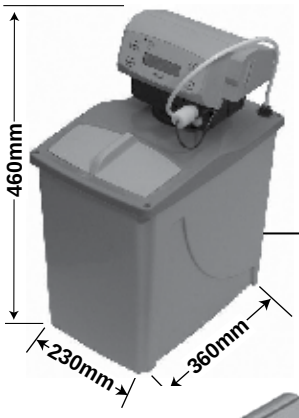

702560
ALIA LT.5

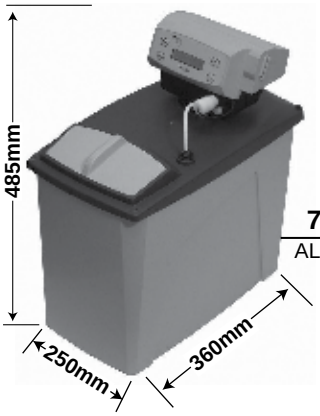

702561
ALIA LT.8

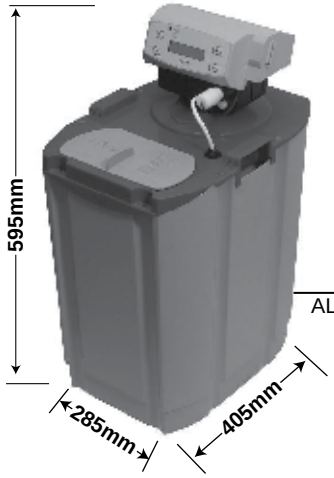

702562
ALIA LT.12

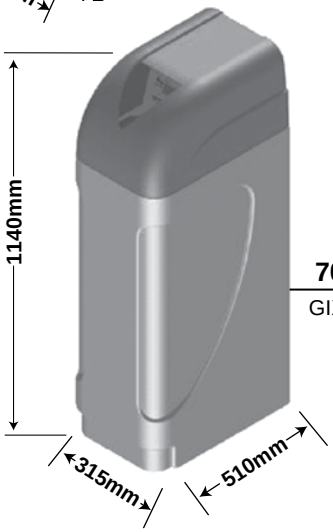

700560
GIX LT. 26



702525
GIX LT. 12



702524
GIX LT. 8



702523
GIX LT. 5

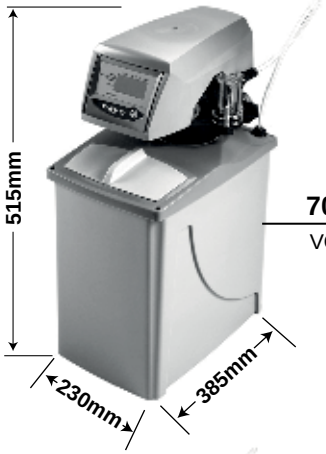

702534
VOL. GIX LT. 5

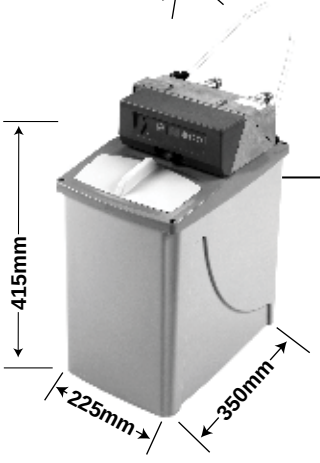

702529
ISI LT. 5

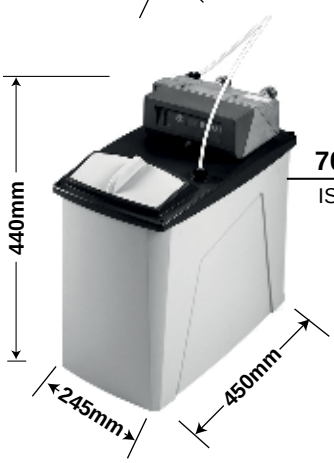

702533
ISI LT. 8

DEPURATORI

308

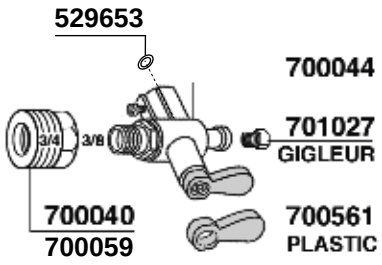

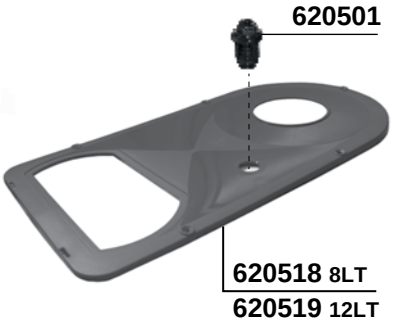

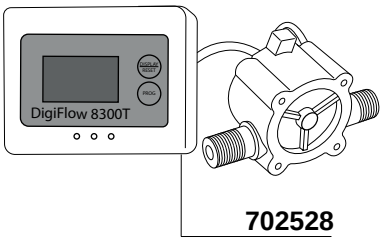

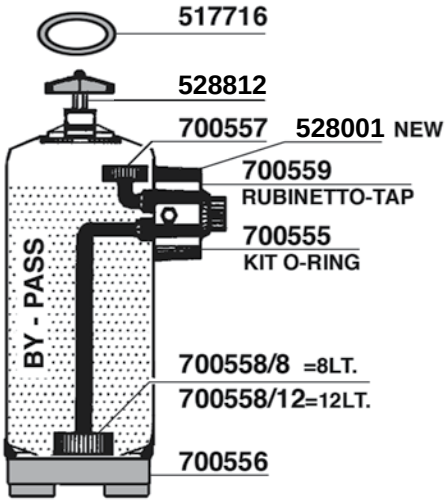

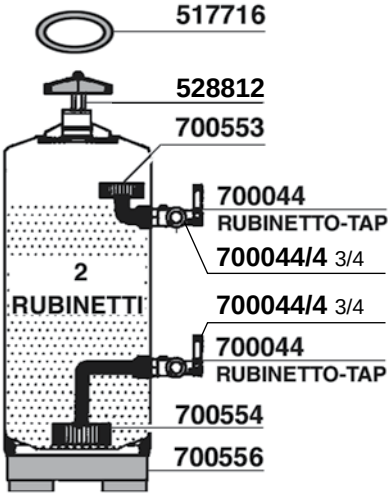

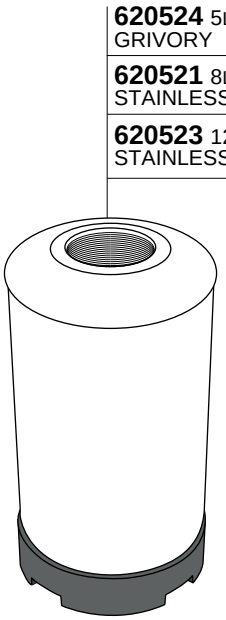

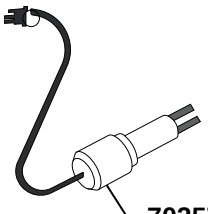





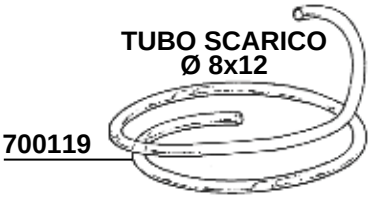

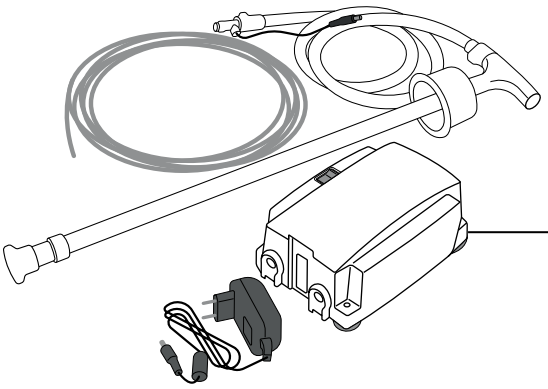

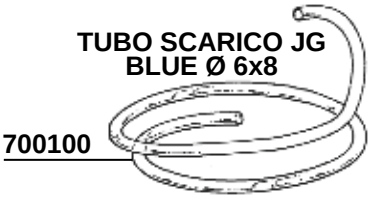

DEPURATORI

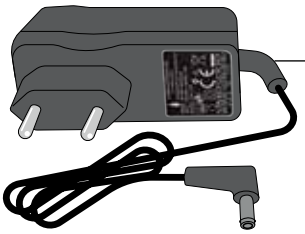

620507/AL
SERIE AL

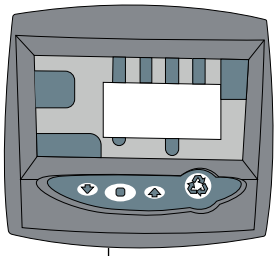

620507
SERIE GIX-ISI

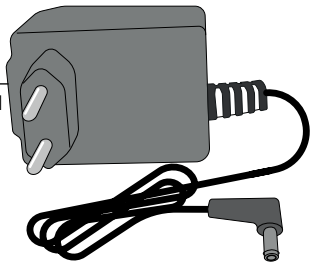

620522
SERIE AL

620520
SERIE GIX

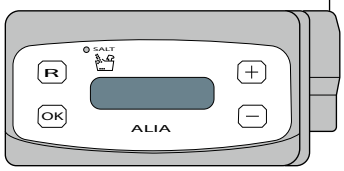

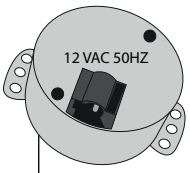

620509
TIMER MOTOR

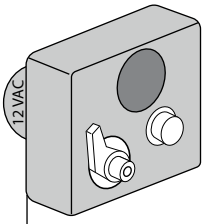

620508
TIMER WITH MOTOR
FOR AUTOTROLL VALVE

620510

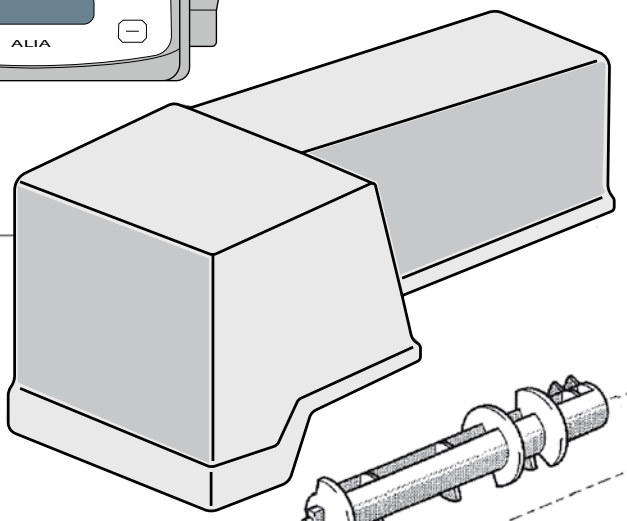

700552

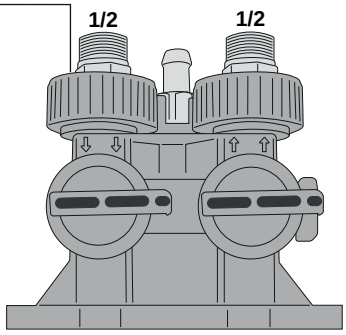

BY-PASS

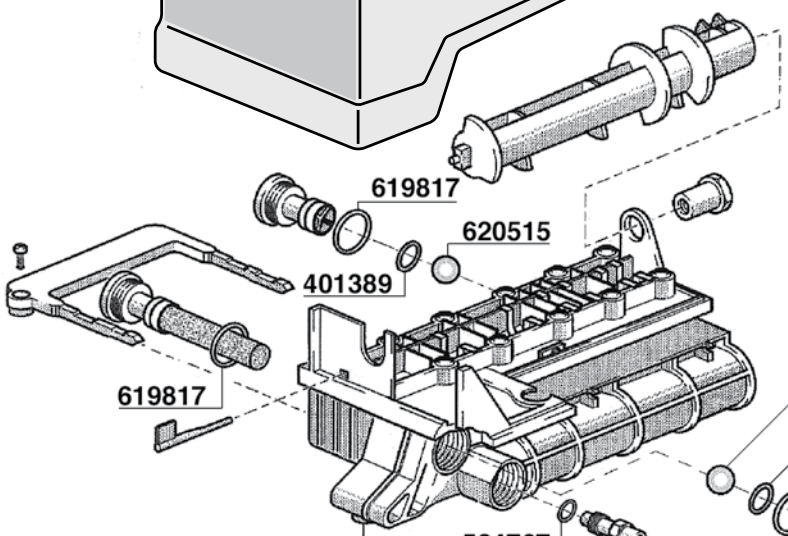

620504=G1/2”
620502=G3/4”

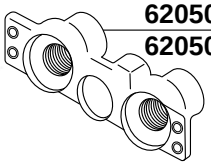

FLANGIA RETTANGOLARE
RECTANGULAR FLANGE

620513

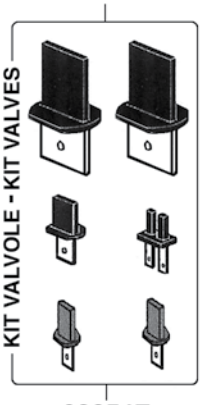

620517

FLANGIA ROTONDA-1a serie
ROUND FLANGE - OLD MODEL

620514
KIT O-RING

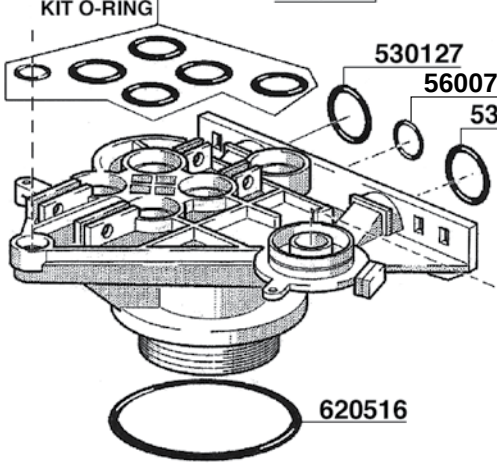

620503

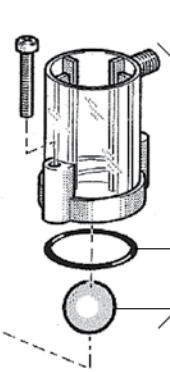

FILTRI DEPURATORI

KIT CARTUCCIA FILTRANTE
PER DEPURATORI MANUALI
FILTER CARTRIDGE KIT
FOR MANUAL SOFTENERS

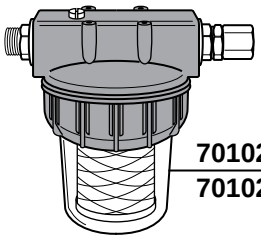

701020 5” 3/8” MF
701021 5“ 3/4” MF

KIT CARTUCCIA FILTRANTE
PER DEPURATORI AUTOMATICI
FILTER CARTRIDGE KIT
FOR AUTOMATIC SOFTENERS

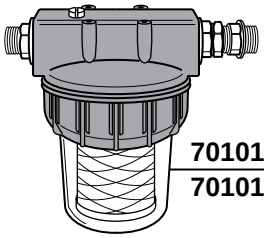

701017 5” 1/2” MM
701016 5” 3/4” MM

KIT CARTUCCIA CARBONI ATTIVI
PER DEPURATORI AUTOMATICI
ACTIVATED CARBON CARTRIDGE KIT
FOR AUTOMATIC SOFTENERS

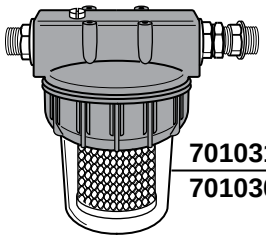

701031 5” 1/2” MM
701030 5” 3/4” MM

KIT CARTUCCIA CARBONI ATTIVI
PER DEPURATORI MANUALI
ACTIVATED CARBON CARTRIDGE KIT
FOR MANUAL SOFTENERS

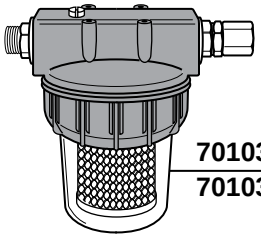

701034 5” 3/8” MF
701035 5” 3/4” MF

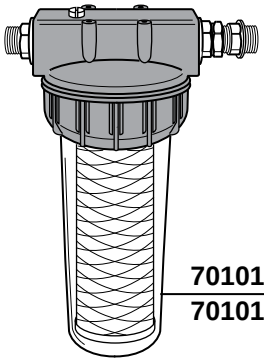

701019 9” 1/2” MM
701018 9” 3/4” MM

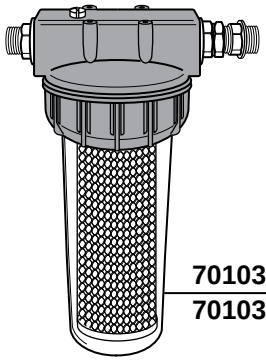

701033 9” 1/2” MM
701032 9” 3/4” MM

CARTUCCIA FILTRANTE
FILTER CARTRIDGE



701022
5”

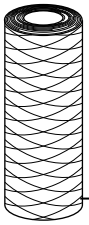

701023
9”

CARTUCCIA CARBONI ATTIVI
ACTIVATED CARBON CARTRIDGE

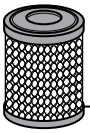

701036
5”

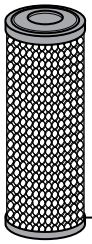

701037
9”

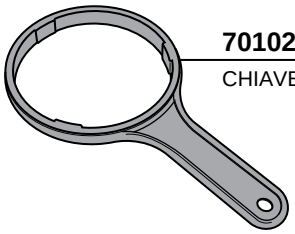

701024
CHIAVE - KEY

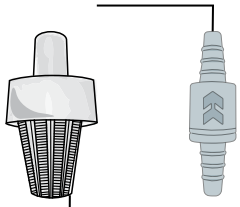

411443
408818

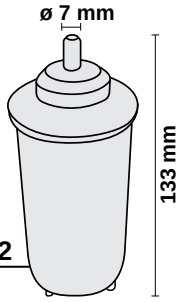

ø 7 mm
133 mm
ø 59 mm
701012
FILTRO
DECALCIFICANTE

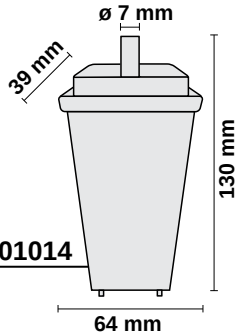

ø 7 mm
39 mm
130 mm
64 mm
701014

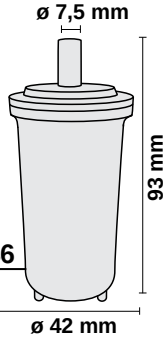

ø 7,5 mm
93 mm
ø 42 mm
701046

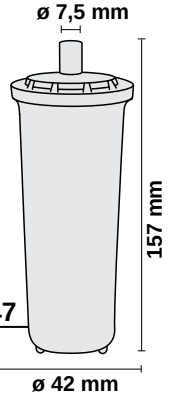

ø 7,5 mm
157 mm
ø 42 mm
701047

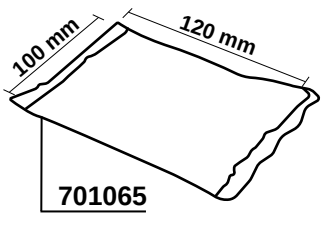

100 mm
120 mm
701065

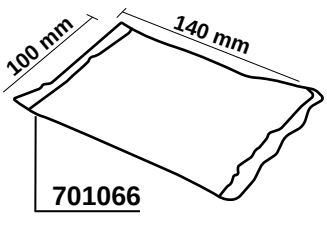

100 mm
140 mm
701066

ADDOLCITORE UNIVERSALE
UNIVERSAL WATER SOFTNER



591177 KG.10
591180 KG.25

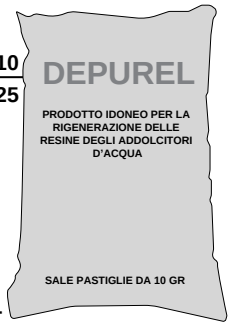

700118
RESINE 25 LT

DEPURATORI ACQUA PRO

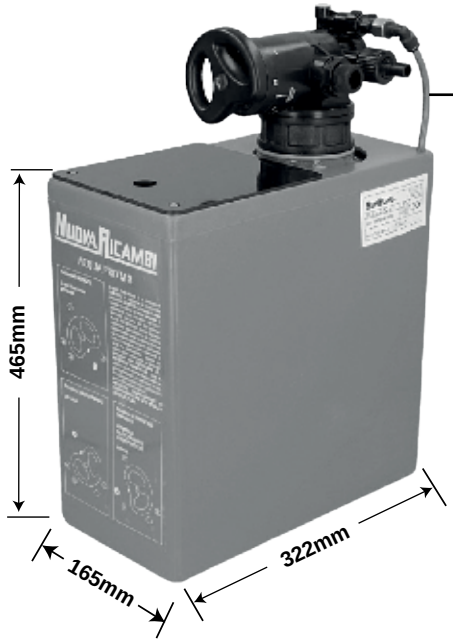

702590

MANUAL WATER SOFTENER
LT.8 BY-PASS

702591

MANUAL WATER SOFTENER
LT.12 BY-PASS





702592

AUTOMATIC VOLUMETRIC
WATER SOFTENER LT.8

702593

AUTOMATIC VOLUMETRIC
WATER SOFTENER LT.10





702594

AUTOMATIC VOLUMETRIC
WATER SOFTENER LT.12

TRATTAMENTO ACQUA

702521 3/8 **702522** 3/8 JG



702521 3/8 **702522** 3/8 JG



702521 3/8 **702522** 3/8 JG



702571





702518
2250 Lt



702519
3800 Lt



702527
0,2 micron



702570
6000 Lt.



702563





702564
WITH TANK



702559
HF40



702565
HF40-S



702566
HF37



702567
MEMBRANE



702568
CARBON BLOCK
0,5 um



702528



702520
CARTINE TORNASOLE
LITTMUS PAPER



620506
KIT PROVA DUREZZA
HARDNESS TEST

BWT



800178

"BWT BESTHEAD ST"
TESTA CARTUCCIA
FILTRANTE
3/8M - 3/8M
FILTERING
CARTRIDGE HEAD
3/8M - 3/8M



800193

"BWT BESTHEAD FLEX"
TESTA CARTUCCIA
FILTRANTE NUOVO TIPO
3/8M 90° - 3/8M 90°
FILTERING CARTRIDGE
HEAD NEW TIPE
3/8M 90° - 3/8M 90°



800195

KIT ANALISI DUREZZA
ACQUA
WATHER HARDNESS
TEST KIT



800179

CONTALITRI "3/8"
CON DISPLAY LCD
DIGITAL LITER
COUNTER "3/8"
WITH LCD DISPLAY



800174

"BWT BESTMAX PREMIUM M"
CARTUCCIA FILTRANTE 1750/2100 Lt-H.
CON TESTATA 500mm-Ø130mm
(250Kg/caffè)
FILTERING CARTRIDGE 1750/2100 Lt-H.
WITH HEAD 500mm-Ø130mm
(250Kg/coffee)



800175

"BWT BESTMAX PREMIUM XL"
CARTUCCIA FILTRANTE 2785/3340 Lt-H.
CON TESTATA 530mm-Ø145mm
(398Kg/caffè)
FILTERING CARTRIDGE 2785/3340 Lt-H.
WITH HEAD 530mm-Ø145mm
(398Kg/coffee)



800184

"BWT BESTPROTECT V"
CARTUCCIA FILTRANTE 1070 Lt-H.
CON TESTATA 445mm-Ø115mm
(150Kg/caffè)
FILTERING CARTRIDGE 1070 Lt-H.
WITH HEAD 445mm-Ø115mm
(150Kg/coffee)



800185

"BWT BESTPROTECT XL"
CARTUCCIA FILTRANTE 2245 Lt-H.
CON TESTATA 530mm-Ø145mm
(321Kg/caffè)
FILTERING CARTRIDGE 2245 Lt-H.
WITH HEAD 530mm-Ø145mm
(321Kg/coffee)

BWT



800186

"BWT BESTTASTE X"
CARTUCCIA FILTRANTE 10000 Lt-H.
CON TESTATA 280mm-Ø85mm NSF
FILTERING CARTRIDGE 10000 Lt-H.
WITH HEAD 280mm-Ø85mm NSF



800187

"BWT BESTTASTE S"
CARTUCCIA FILTRANTE 40000 Lt-H.
CON TESTATA 355mm-Ø85mm NSF
FILTERING CARTRIDGE 40000 Lt-H.
WITH HEAD 355mm-Ø85mm NSF



800188

"BWT BESTMIN PREMIUM M"
CARTUCCIA FILTRANTE 10000 Lt-H.
CON TESTATA 500mm-Ø130mm
FILTERING CARTRIDGE 10000 Lt-H.
WITH HEAD 500mm-Ø130mm



800189

"BWT BESTMAX SOFT XL"
CARTUCCIA FILTRANTE 6800 Lt-H.
CON TESTATA 530mm-Ø145mm
(971Kg/caffè)
FILTERING CARTRIDGE 6800 Lt-H.
WITH HEAD 530mm-Ø145mm
(971Kg/coffee)



800196

"BWT BESTMAX SMART 25"
CARTUCCIA FILTRANTE 3800 Lt-H.
CON TESTATA 448mm-Ø110mm
(543Kg/caffè)
FILTERING CARTRIDGE 3800 Lt-H.
WITH HEAD 448mm-Ø110mm
(543Kg/coffee)



800191

"BWT BESTMAX SMART 30"
CARTUCCIA FILTRANTE 5800 Lt-H.
CON TESTATA 500mm-Ø130mm
(829Kg/caffè)
FILTERING CARTRIDGE 5800 Lt-H.
WITH HEAD 500mm-Ø130mm
(829Kg/coffee)



800194

"BWT BESTMAX SMART 35"
CARTUCCIA FILTRANTE 7800 Lt-H.
CON TESTATA 527mm-Ø147mm
(1114Kg/caffè)
FILTERING CARTRIDGE 7800 Lt-H.
WITH HEAD 527mm-Ø147mm
(1114Kg/coffee)



800197

"BWT BESTMAX SMART 40"
CARTUCCIA FILTRANTE 9300 Lt-H.
CON TESTATA 527mm-Ø147mm
(1329Kg/caffè)
FILTERING CARTRIDGE 9300 Lt-H.
WITH HEAD 527mm-Ø147mm
(1329Kg/coffee)



800198

"BWT BESTMAX SMART 42"
CARTUCCIA FILTRANTE 13000 Lt-H.
CON TESTATA 600mm-Ø185mm
(1857Kg/caffè)
FILTERING CARTRIDGE 13000 Lt-H.
WITH HEAD 600mm-Ø185mm
(1857Kg/coffee)



800192

"BWT BESTMIN COFFEE 100"
CARTUCCIA FILTRANTE 10000 Lt-H.
CON TESTATA 500mm-Ø130mm
FILTERING CARTRIDGE 10000 Lt-H.
WITH HEAD 500mm-Ø130mm

POMPE ROTATIVE

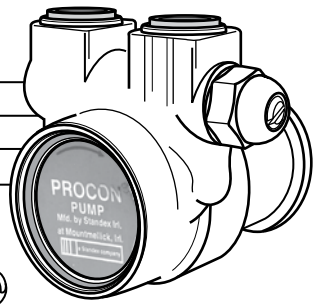

700008 110 Lt/h NSF
700008/X 110 Lt/h NSF INOX-STAINLESS STEEL
700008/2 200 Lt/h NSF
700012/X 150Lt/h NSF INOX-STAINLESS STEEL



700054 200 Lt/h
CON ATTACCO MANOMETRO
BYPASS MANOMETER CONNECTION

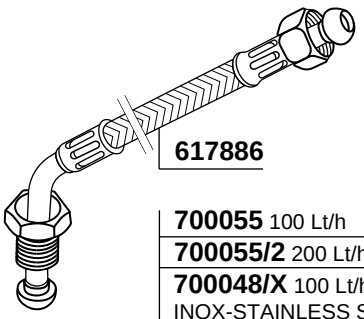

617886



620441
CIECA-BLIND
620442
CON RITEGNO
ONE WAY

700055 100 Lt/h
700055/2 200 Lt/h
700048/X 100 Lt/h
INOX-STAINLESS STEEL

700047 50 Lt/h
MINIPOMPA

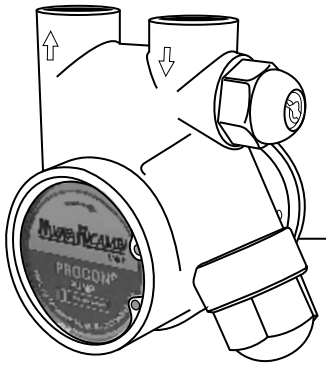

700008/F 150 Lt/h
CON FILTRO
WITH FILTER

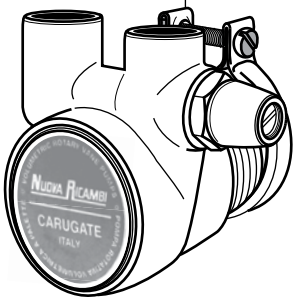

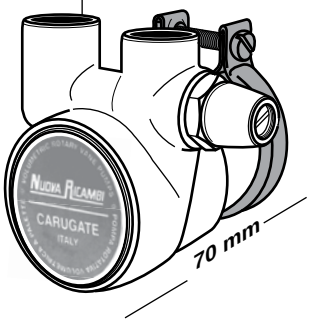

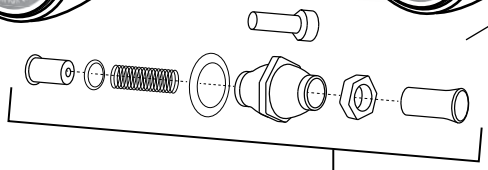

620390 KIT FLUID-O-TECH

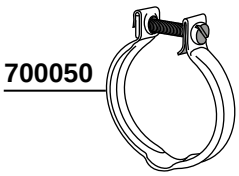

700050

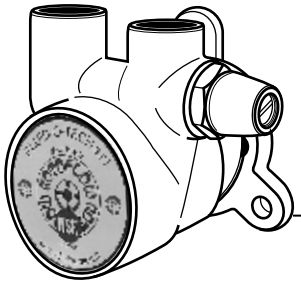

620407/1 100 Lt/h
620407 200 Lt/h

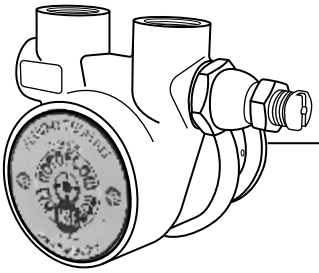

620406 150 Lt/h
620406/X 150 Lt/h
INOX-STAINLESS STEEL
620406/2 200 Lt/h
620389 300 Lt/h

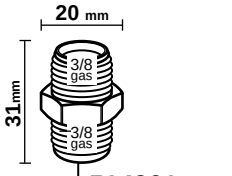

514901
514903 TEA

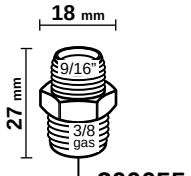

300055
USA

710000 100 Lt/h
TRASCINAMENTO MAGNETICO
MAGNET DRIVE ROTARY VANE PUMP

710001 200 Lt/h
TRASCINAMENTO MAGNETICO
MAGNET DRIVE ROTARY VANE PUMP

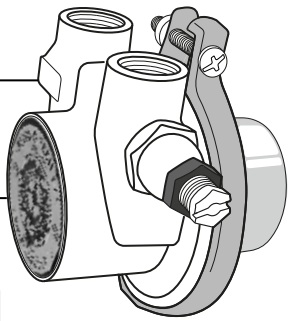

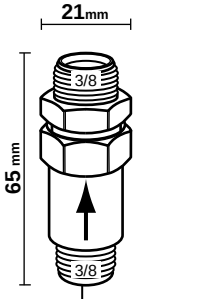

700011/E

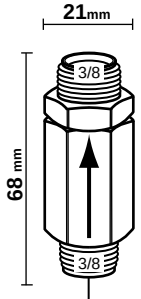

700011

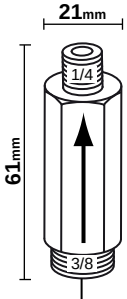

412845

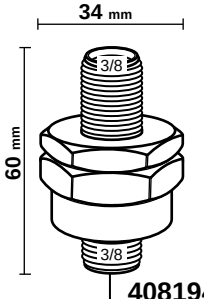

408194
FILTER

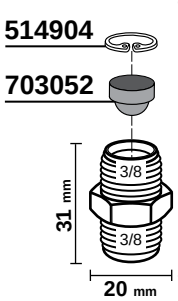

514902
FILTER

514902/X
FILTER STAINLESS STEEL

ELETTROPOMPE

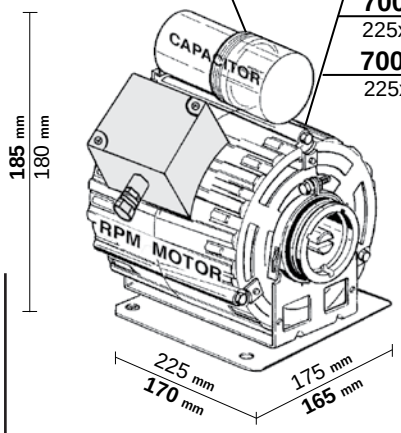

621347=10µF
702311=16µF

700154/22=V220/50 W165 HP0,2
170x165x185 mm
700085/22=V220/50/60 W330 HP0,5 UL USA
225x175x180 mm
700085/11=V110/60 W330 HP0,5 UL USA
225x175x180 mm

700050

700055=100Lt/h
NUOVA RICAMBI

700032/22=V220/50 W165 HP0,2

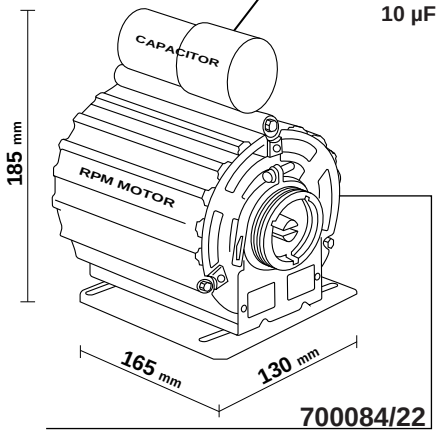

621347
CAPACITOR
CONDENSAT.
10 µF

700084/22
V220/50/60 W165 HP0,2 WITH CABLE

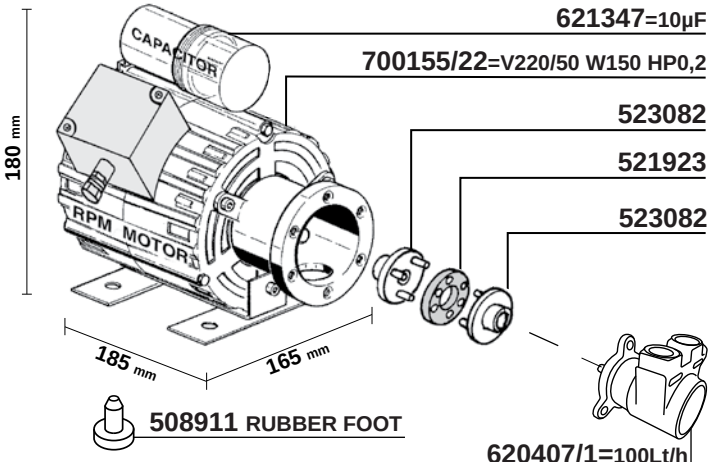

621347=10µF
700155/22=V220/50 W150 HP0,2
523082
521923
523082

508911 RUBBER FOOT

620407/1=100Lt/h
FLUID-O-TECH
620407=200Lt/h
FLUID-O-TECH

700171/22=V220/50 W150 HP0,2 x100Lt/h
700121/22=V220/50 W150 HP0,2 x200Lt/h

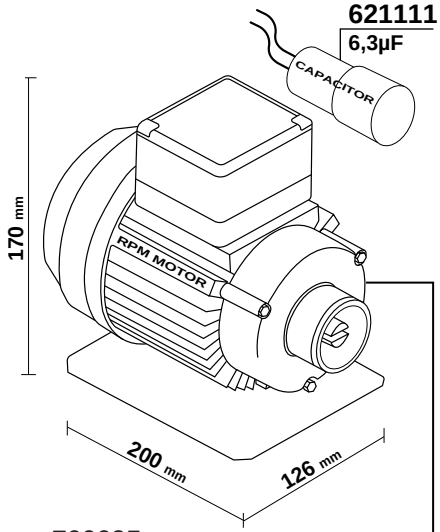

621111
6,3µF

700095=V220/230-240 W300 HP0,4

700086/22=V220/50/60 W150 HP0,2
700086/11=V110/60 W120 HP0,1

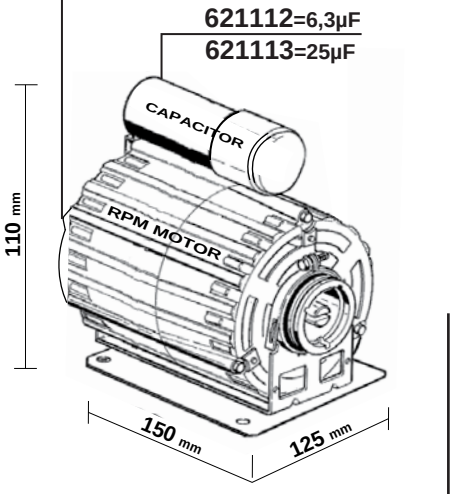

621112=6,3µF
621113=25µF

MOTORE PICCOLO - SMALL MOTOR

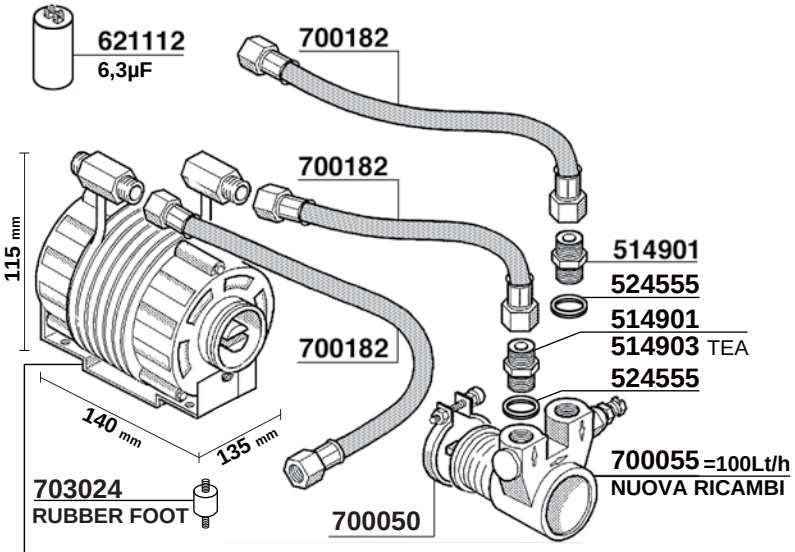

621112
6,3µF

700182
700182
700182

514901
524555
514901
514903 TEA
524555

700055 =100Lt/h
NUOVA RICAMBI

703024
RUBBER FOOT

700050

703023

MOTORE RAFFREDDATO AD ACQUA -
MOTOR WATERCOOL V220 W260 HP0,4

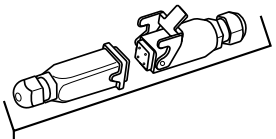

700096
KIT CONNETTORE RAPIDO ELETTRICO IP65
QUICK FIT ELECTRIC CONNECTION KIT IP65

ELETTROPOMPE COMPATIBILI FAEMA

630177 150 Lt/h NUOVA RICAMBI
630177/NSF 150 Lt/h NUOVA RICAMBI
630177/X 150 Lt/h INOX-STAINLESS STEEL

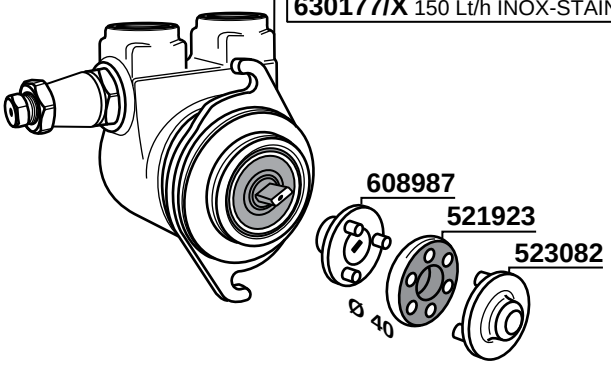

630178 150 Lt/h FLUID-O-TECH

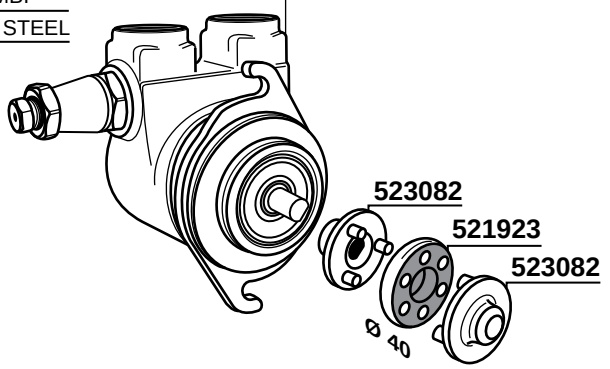

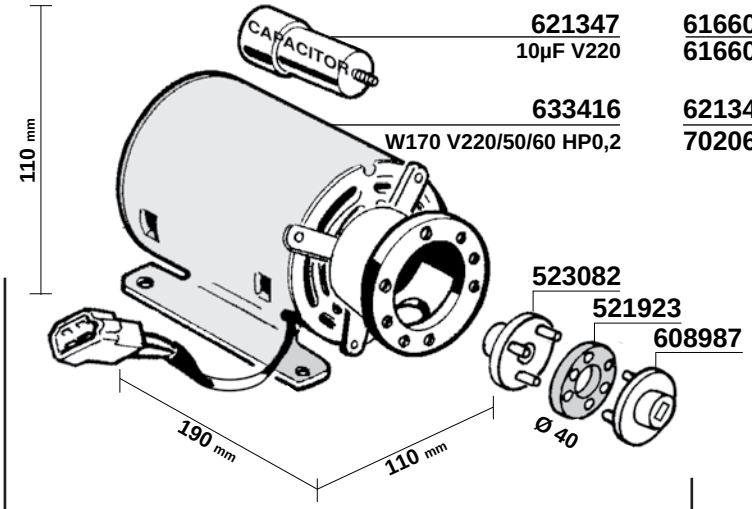

TRONIC-STAR-E91-DUE

616600/22=W170 V220/50/60 HP0,2
616601/11=W170 V110/60 HP0,2
621347=10µF V220
702062=40µF V220

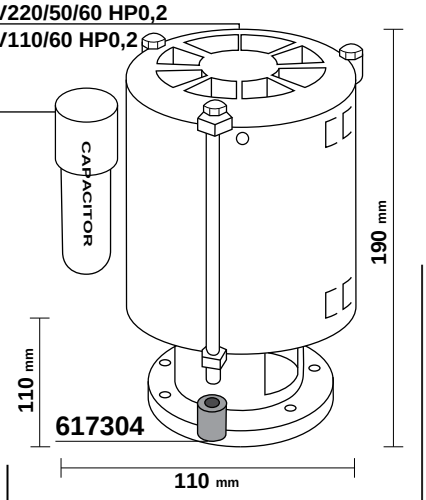

SPECIAL-EXPRESS-COMPACT

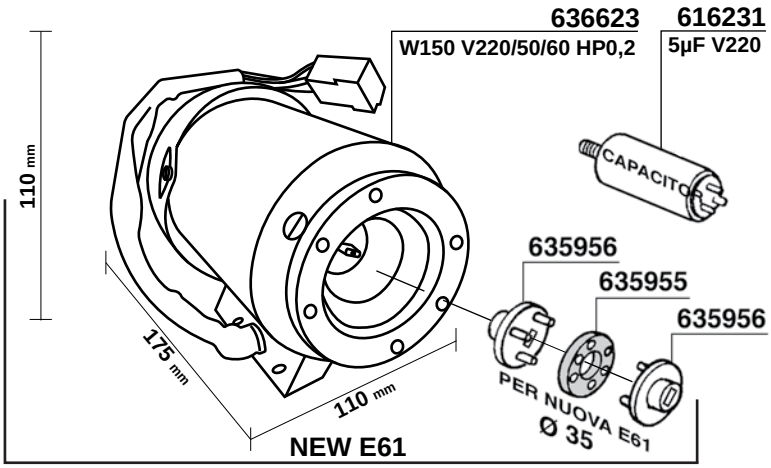

NEW E61

ELETTROPOMPE

617170 INVENSYS CP3A-220V 50Hz 65W
617160/24 ULKA EX5-24V 50/60Hz 48W
617160/22 ULKA EX5-220V 50/60Hz 48W
617160/11 ULKA EX5-120V 60Hz 41W
617165 ULKA EP5-24V 50/60Hz 48W
617164 ULKA EP5-220V 50/60Hz 48W
617167 ULKA EAX5-120V 60Hz 52W
617169 ULKA EAX5-220V 60Hz 64W
617168 ULKA EP4-230V 50Hz 48W

FASCETTA IN NYLON 6,6



527000 120x2,5
527002 160x2,5
527003 200x3,6
527005 300x3,6

MICROPOMPA VAPORE
MANUAL RESETTING
415675=230V 50Hz 16W
414061=120V 50Hz 16W

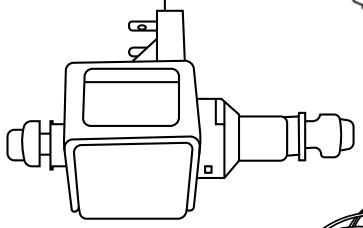

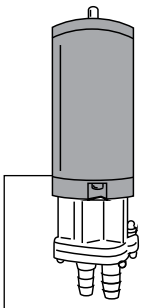

620419
MILK PUMP 24V DC 3400 rpm
FLUID-O-TECH
TYPE M36X30/I

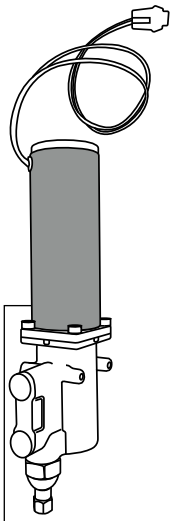

700013
60W 24V DC 4000 rpm
MICRO VANE
BRUSHED MOTOR

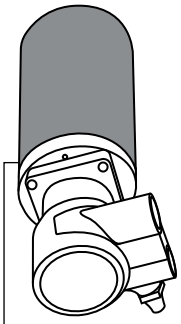

700072
48W 24V DC 2252 rpm 100Lt
ROTARY PUMPS
WITH MOTOR MBT

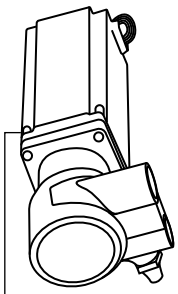

700073
90W 24V DC 4000 rpm 100 Lt
BRUSHLESS MOTOR

TUBI GOMMA - RUBBER HOSES
FOOD QUALITY - BAR 25 - t.110°C



3/8F - 3/8F CONICO - CONICAL
700014 50 cm
700015 60 cm
700016 80 cm
700017 150 cm
700018 200 cm

TUBI INOX - STAINLESS STEEL HOSES
BAR 12 - t.90°

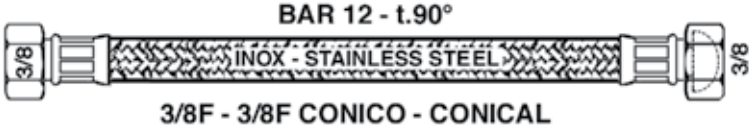

3/8F - 3/8F CONICO - CONICAL
700182 50 cm
700183 80 cm
700196 100 cm
300050 120 cm
700184/S 150 cm
300051 210 cm

TUBI INOX - STAINLESS STEEL HOSES
BAR 12 - t.90°

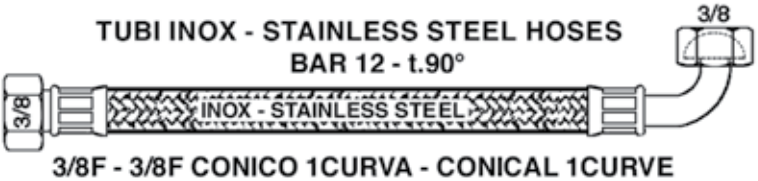

3/8F - 3/8F CONICO 1CURVA - CONICAL 1CURVE
700186 50 cm
700184 150 cm
700185 200 cm

615256

TUBI INOX - STAINLESS STEEL HOSES
BAR 12 - t.90°



3/4F -3/4F - PIANO 1CURVA - FLAT 1CURVE
700187 150 cm
700187/2 200 cm

TUBI INOX - STAINLESS STEEL HOSES
BAR 12 - t.90°

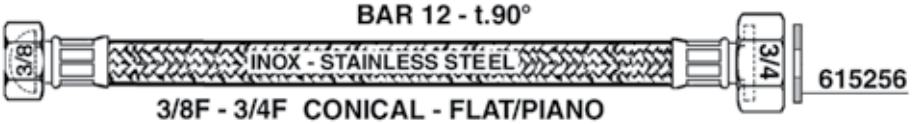

615256

3/8F - 3/4F CONICAL - FLAT/PIANO
300052 150 cm



700254 / T

1/8 F - 1/8 F PIATTO/ FLAT
700250 37 cm

615256

TUBI INOX - STAINLESS STEEL HOSES
BAR 12 - t.90°

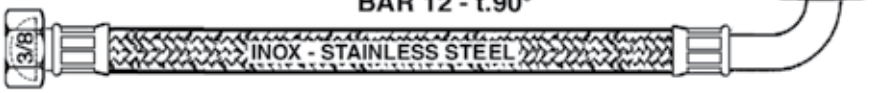

3/8F - 3/4F - PIANO 1CURVA - FLAT 1CURVE
300053 200 cm
300054 80 cm

615256



3/4F - 3/4F 1CURVA -1CURVE
615273 200 cm
615274 150 cm

615256



3/4F - 3/4F 1CURVA -1CURVE
615275 200 cm
615276 150 cm

320

TUBI

TUBI GOMMA - RUBBER HOSES
BAR 25 - t 110°C

GOMMA - RUBBER

700003 Ø 8x17
700003/10 Ø 10x17

TUBI SILICONE - SILICON HOSES

SILICONE - SILICON

700197/6 Ø 3x6
700197 Ø 4x7
700197/8 Ø 5x8
700197/9 Ø 6x9
700197/10 Ø 10x15
700197/12 Ø 8x12

TUBO GAS - GAS HOSE

700198 Ø 13x20

TUBI RILSAN - RILSAN HOSES
BAR 20 - t 20°C

RILSAN

560048 Ø 4x6
560049 Ø 6x8

TUBI TEFLON - TEFLON HOSES

TEFLON

408593 Ø 4x2
560047 Ø 5x3
405335 Ø 6x4
560049/T Ø 6x8

TUBI SCARICO TRASPARENTI CON FILO IN METALLO
DRAIN TRASPARENT HOSES WITH METAL WIRE

ELISPIR

700031 Ø 12x18
700031/14 Ø 14x20
700031/16 Ø 16x23
700031/18 Ø 18x25

ELISPIR

700037 Ø 20x26
700037/25 Ø 25x33
700037/30 Ø 30x38

TUBI SCARICO NERI CON FILO IN METALLO
DRAIN BLACK HOSES WITH METAL WIRE

ELISPIR

700060 Ø 16x23
700060/15 Ø 15x22

RAME - COPPER

M701007 Ø 2x4
M701006 Ø 4x6
M701087 Ø 6x8
M701084 Ø 8x10
M701085 Ø 10x12

TUBO SCARICO - DRAIN HOSES
PLASTICA NERO - BLACK PLASTIC

560058 Ø 14x18
560059 Ø 16x20
560060 Ø 20x24



700078 8-12
700004 12-22
700088 20-32
700079 25-40
700080 30-45

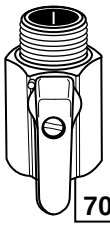

700169/M
3/8M - 3/8F

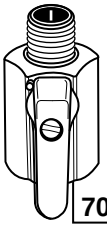

700170/V
1/4M - 1/4F

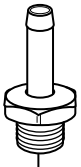

700053
Ø4 - 1/8

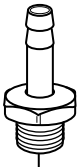

700043
Ø6 - 1/8

700000
3/8
700000/C
3/8 CHROMED

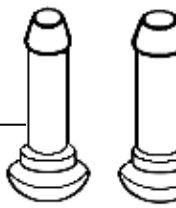

700001
Ø8

700001/10
Ø10

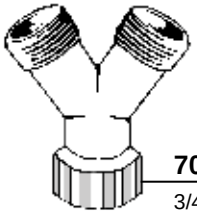

700188
3/4 - PLASTIC

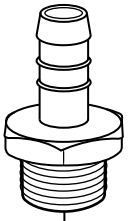

700033
Ø12 - 1/2

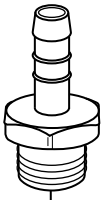

700002
Ø8 - 3/8

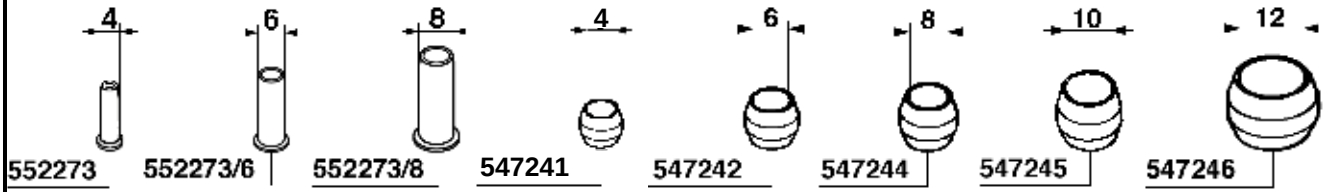

RACCORDI

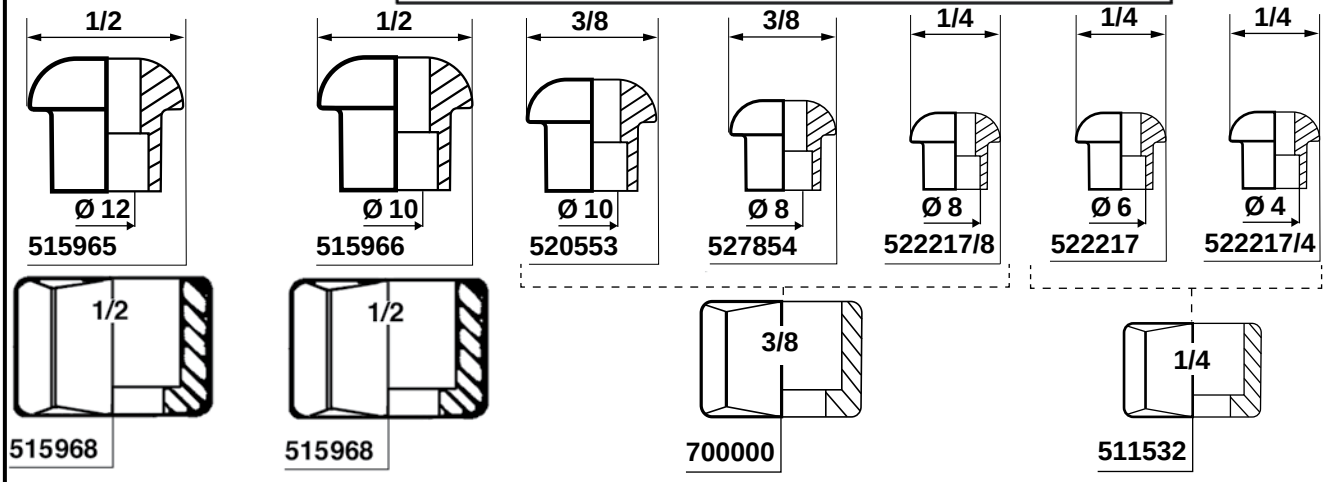

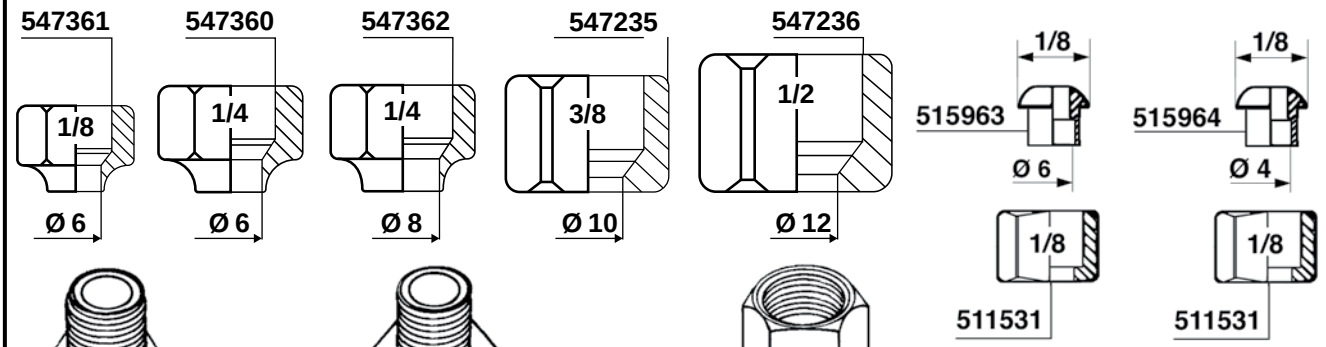

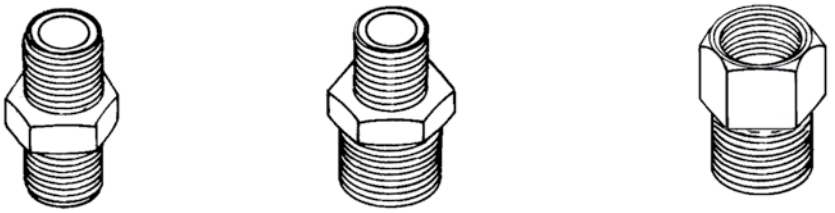

700023= 1/8M
700039= 1/4M
514901= 3/8M
700034= 1/2M
620401= 3/4M
514903= 3/8M TEA

700056= 1/8M - 1/4M
620581= 1/8M - 3/8M
700036= 1/4M - 3/8M
700035= 3/8M - 1/2M
700041= 3/8M - 3/4M
700098= 1/2M - 3/4M
700114= 1"M - 3/4M
620578= 1''M - 3/8M

620399= 1/8F - 1/4M
700046= 1/8F - 3/8M
620398= 1/4F - 1/8M
700082= 1/4F - 3/8M
620582= 3/8F - 1/8M
700091= 3/8F - 1/4M
700089= 3/8F - 3/8M
700090= 3/8F - 1/2M
700092= 1/2F - 3/8M
700093= 3/4F - 3/8M
700083= 3/4F - 1/2M

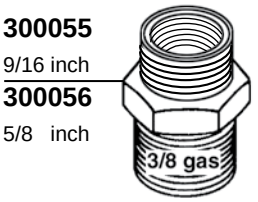

for USA

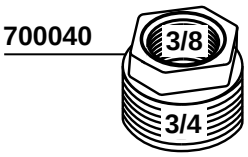

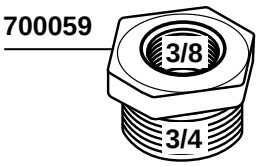

TAPPO FEMMINA-FEMALE PLUG

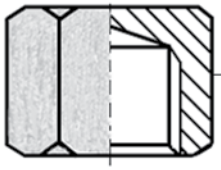

620580/1=1/8F
620580/2=1/4F
620580/3=3/8F
620580/4=1/2F

GUARNIZIONE TEFLON
TEFLON GASKET

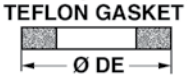

529010/1 = ØDE 1/8
529010/2 = ØDE 1/4
529010/3 = ØDE 3/8
529010/4 = ØDE 1/2
529010/5 = ØDE 3/4

GUARNIZIONE RAME
TEFLON COPPER
524551 = ØDE 1/8

TAPPO MASCHIO-MALE PLUG

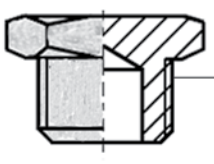

620579/1=1/8M
620579/2=1/4M
620579/3=3/8M
620579/4=1/2M

GUARNIZIONE TEFLON
TEFLON GASKET

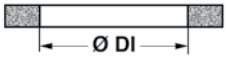

529011/1 = ØDI 1/8
529011/2 = ØDI 1/4
529011/3 = ØDI 3/8
529011/4 = ØDI 1/2
529011/5 = ØDI 3/4

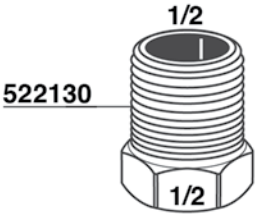

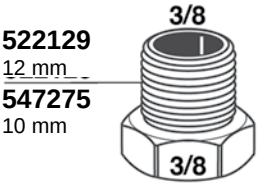

RACCORDI



620550=1/8M
620551=1/4M
620552=3/8M
620553=1/2M



620554=1/8F
620554F=1/8F TEA
620555=1/4F
620556=3/8F
620557=1/2F



620558=1/8FFM
620559=1/4FFM
620560=3/8FFM
620561=1/2FFM



620583=1/8FMM
620584=1/4FMM
620544=3/8FMM



620585=1/8MMF
620586=1/4MMF



620588=MFF



620562=1/8M
620563=1/4M
620564=3/8M
620565=1/2M



400226=1/8M-1/4M



620566=1/8F
620567=1/4F
620568=3/8F
620569=1/2F



620570=1/8MF
620571=1/4MF
620572=3/8MF
620573=1/2MF



620499=1/4M-1/4F



400158=1/8F Ø 4



620549=3/8MM-1/4F



703068=1/2MM
703058=1/2MM-1/4F



400157=1/8F Ø 6
400159=1/8F Ø 4



408280=1/8M Ø 6



410761=1/8M Ø 4



410760=1/8M Ø 4
408858=1/8M Ø 6
410762=1/4M Ø 4
410763=1/4M Ø 6

RACCORDI



700043



620587



700043/C



700043/M



620547=1/8M Ø 6



620548=1/8M Ø 6

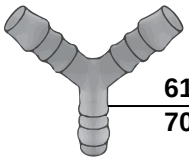

617166 6 mm
700671 8 mm

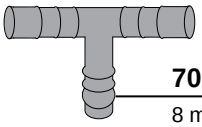

700692
8 mm

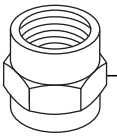

620574=1/8F
620410=1/4F
620411=3/8F
620575=1/2F

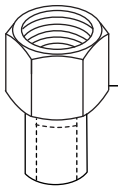

620576=1/8F - 1/4F
620412=1/4F - 3/8F
620577=3/8F - 1/2F
620546=1/4F - 1/4M

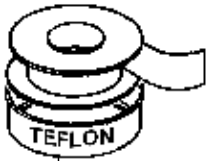

700022
mt.12x12mmx0,07mm



591671
TEFLON THREAD

PIEDINI

GOMMA NERA - BLACK RUBBER

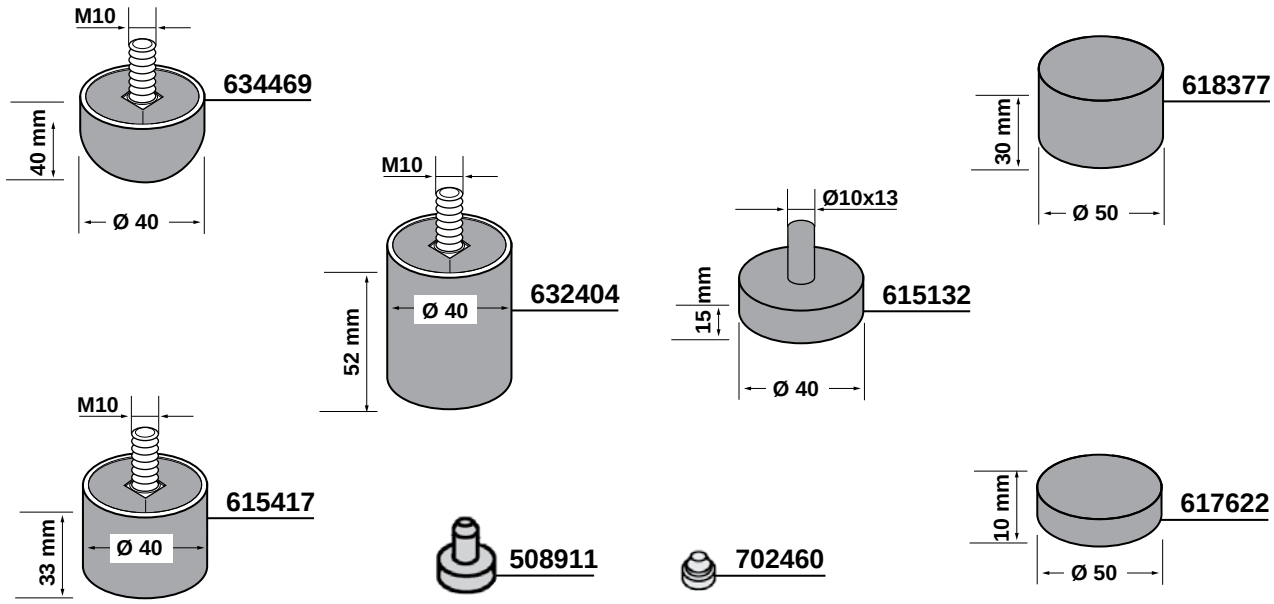

PLASTICA NERA - BLACK PLASTIC

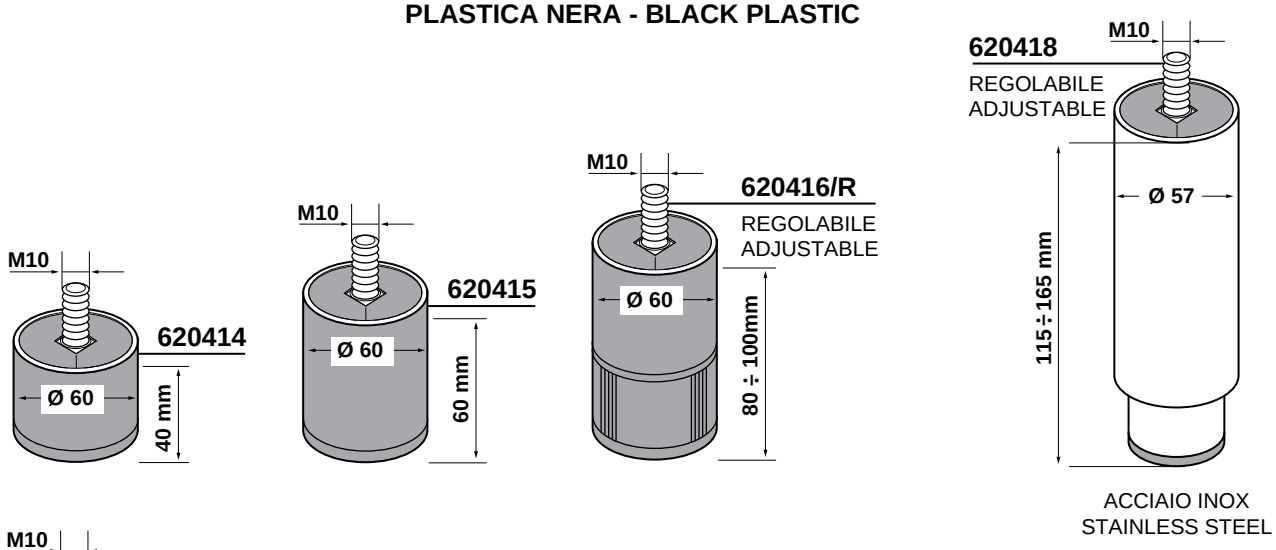

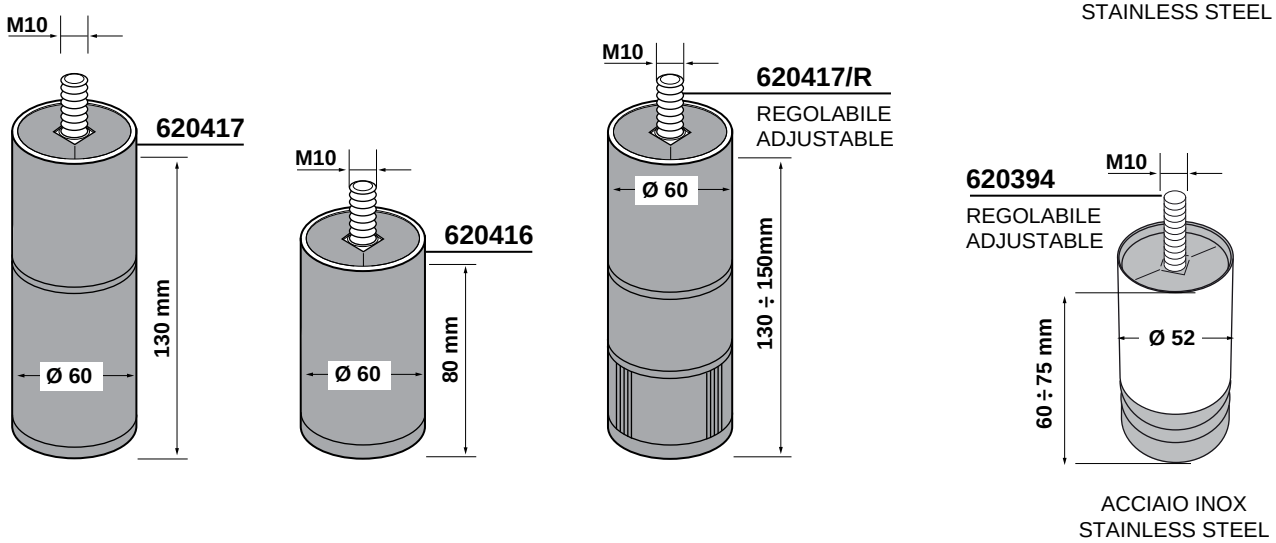

CAPPUCCINATORI

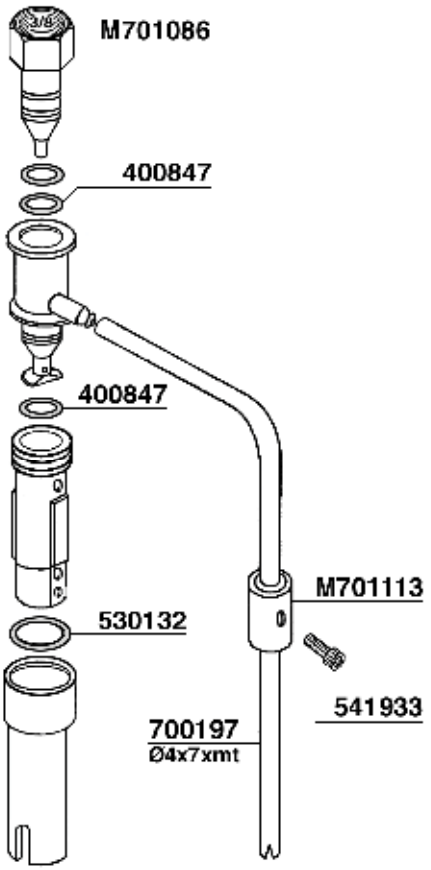

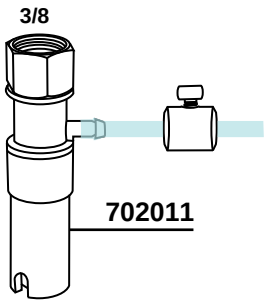

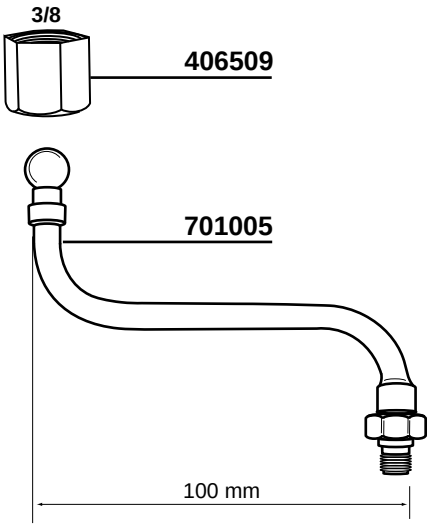

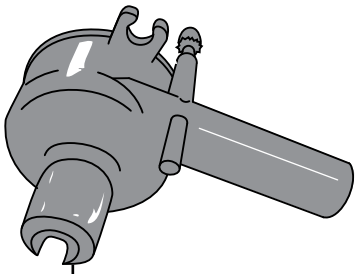

701026/B WHITE
701026/N BLACK

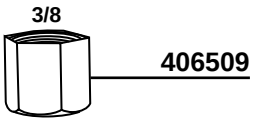

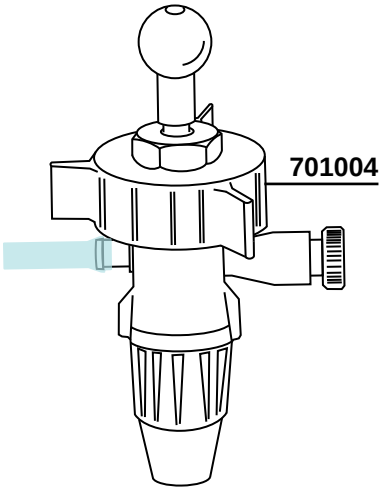

CAPPUCCINATORE BOY
APRIBILE - OPENABLE

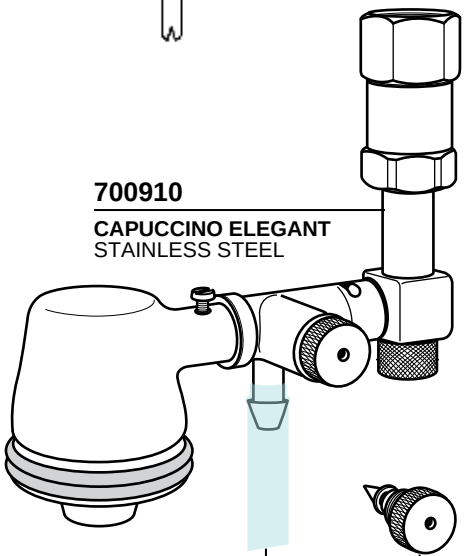

700197/8
SILICON Ø 5x8

700914
PERNO
REGOLAZIONE

KIT AUTOSTEAM

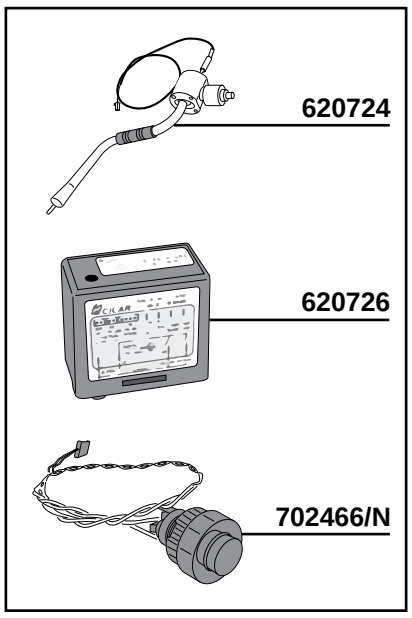

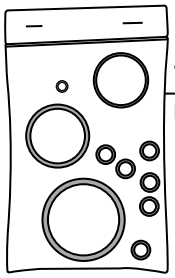

700913
KIT O-RING

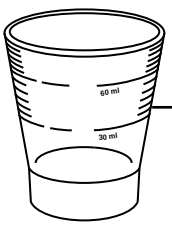

701011

BICCHIERINO PIREX 60-30 ml
PIREX SHOT GLASS 60-30 ml

MANOPOLE

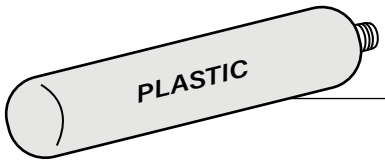

630407
M10

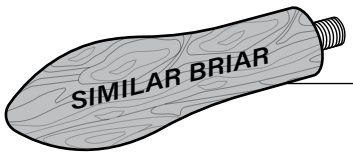

704007
M12

700790
TAPPO CROMATO
CHROMATE PLUG

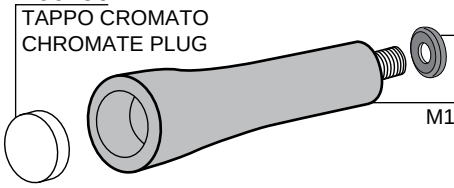

700791/A

700791
M12 ORIGINAL

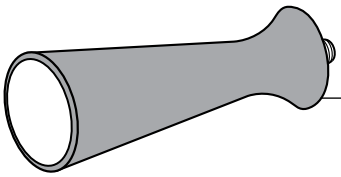

700886/C
ORIGINAL

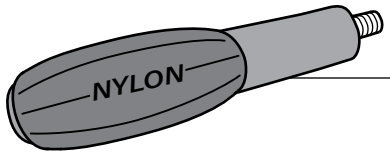

700690
M10

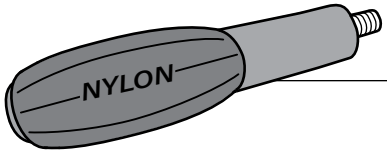

700697
M12

617940
TAPPO CROMATO
CHROMATE PLUG

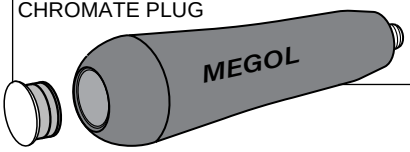

M632317
M12

617940
TAPPO CROMATO
CHROMATE PLUG

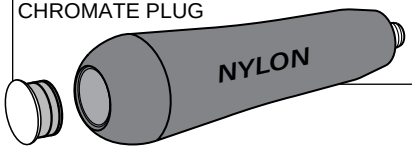

632317
M12 OPAQUE

632316/M
M10

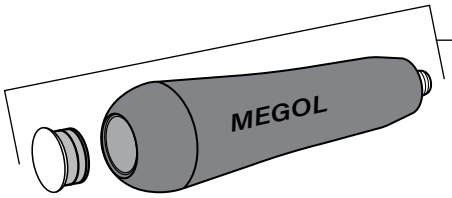

617940
TAPPO CROMATO
CHROMATE PLUG

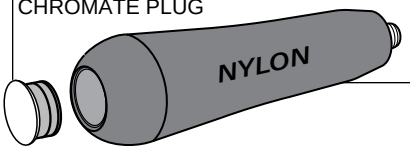

632316
M10

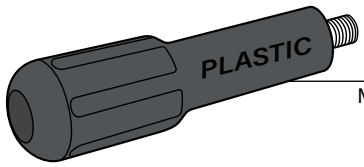

617942
M12 OPAQUE

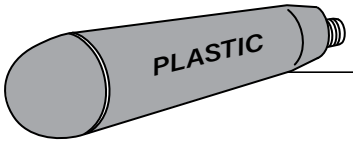

632327
M10

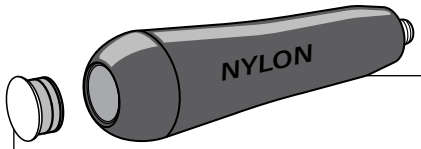

632312
M12 SHINING

617940
TAPPO CROMATO
CHROMATE PLUG

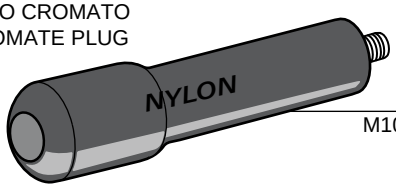

617938
M10 SHINING

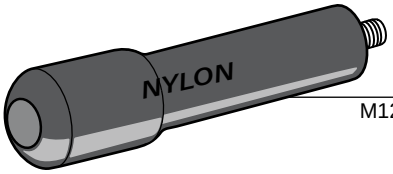

700317
M12 SHINING

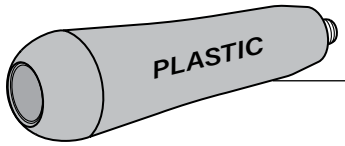

632306 YELLOW
632304 GREEN
M12

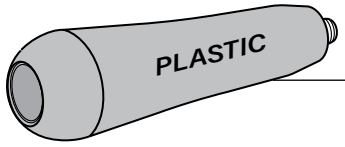

632303 GREEN
M10

DISPONIBILI SU RICHIESTA IN ALTRI COLORI

AVAILABLE ON REQUEST IN OTHER COLORS

BRUGNETTI - BFC - ECM - EXPOBAR - FIAMMA RST
FIORENZATO CS - GRIMAC - SAN REMO - SV ITALIA - VIBIEMME - WEGA

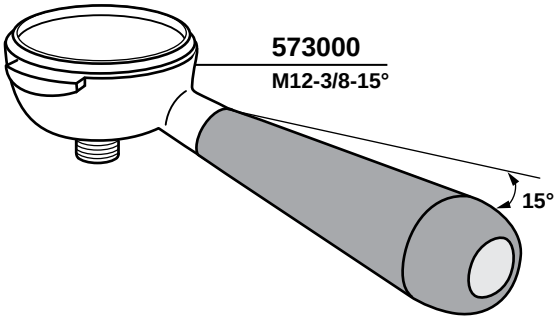

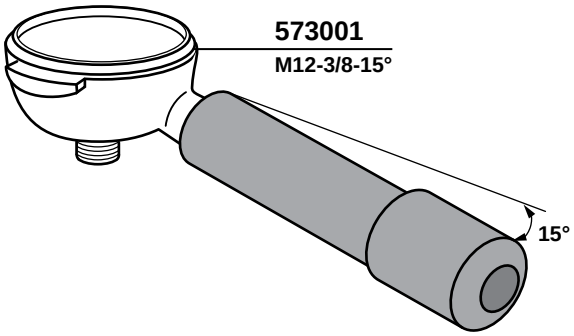

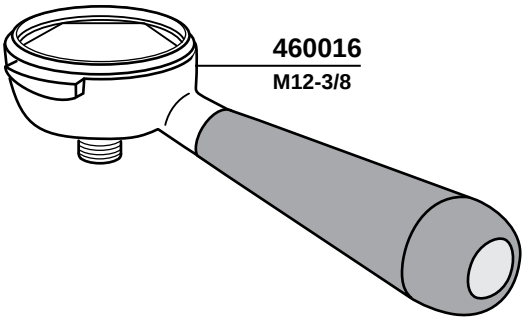

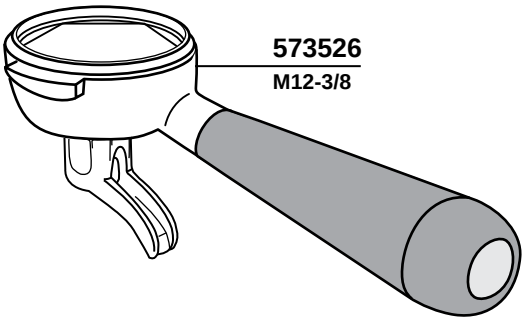

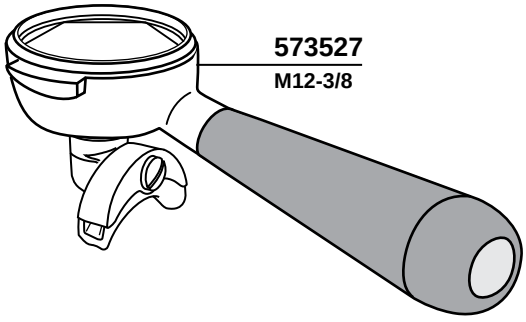

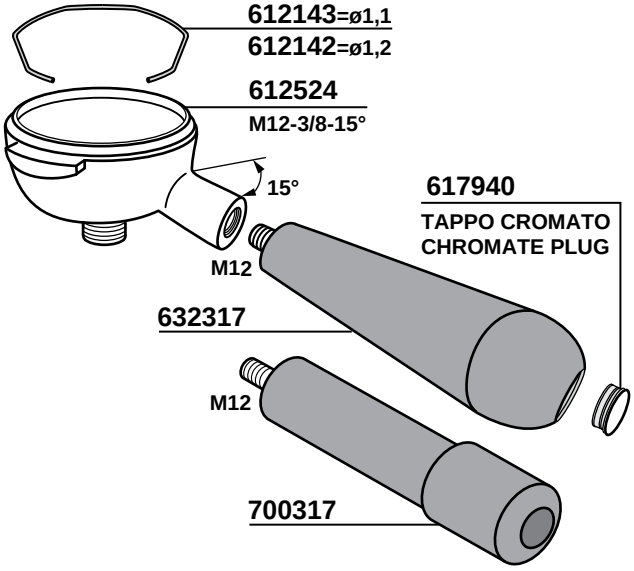

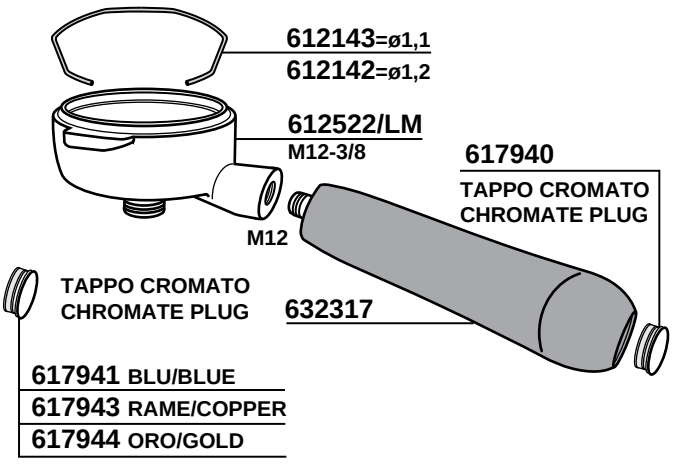

TAPPO CROMATO CHROMATE PLUG

617941 BLU/BLUE
617943 RAME/COPPER
617944 ORO/GOLD

FILTRO PER CIALDE

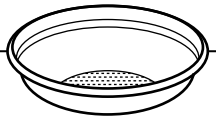

407110
1 CAFFE' SPAZIALE

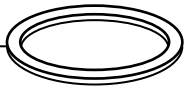

410504
35x54x1

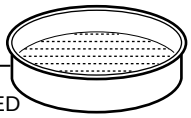

526100
525000
SALDATA/WELDED

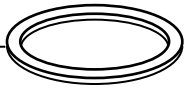

409988
35x49x1

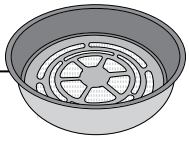

526103

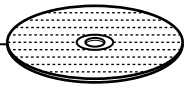

700163
700163/X

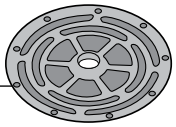

700163/C

409169 1 CAFFE' 16 mm
407108 1 CAFFE' 17 mm
410392 1 CAFFE' 17,5 mm
407109 2 CAFFE' 22 mm
407111 2 CAFFE' 21 mm

ARIETE
ASTORIA
AURORA
BEZZERA
BRASILIA
CARIMALI
CIMBALI
CONTI
FAEMA
GAGGIA
MARZOCCO
NUOVA SIMONELLI
PAVONI
RANCILIO
VIBIEMME
WEGA

INOX STAINLESS STEEL

BRUGNETTI - BFC - ECM - EXPOBAR - FIAMMA RST
FIORENZATO CS - GRIMAC - SAN REMO - SV ITALIA - VIBIEMME - WEGA

328

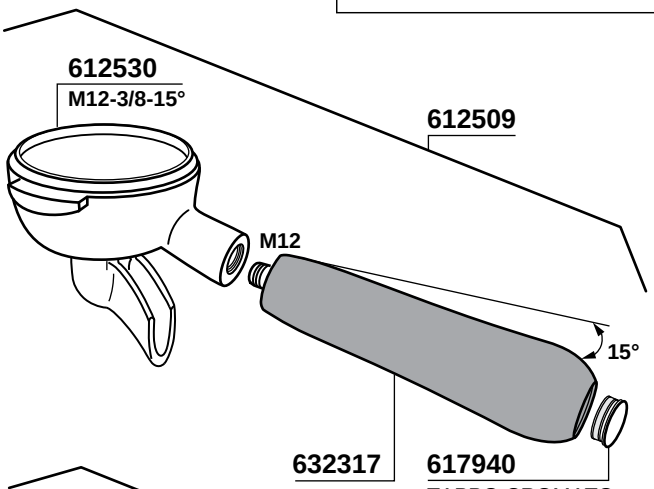

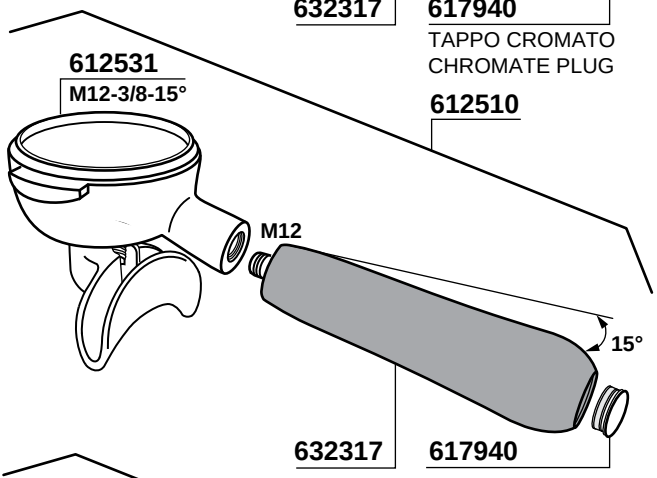

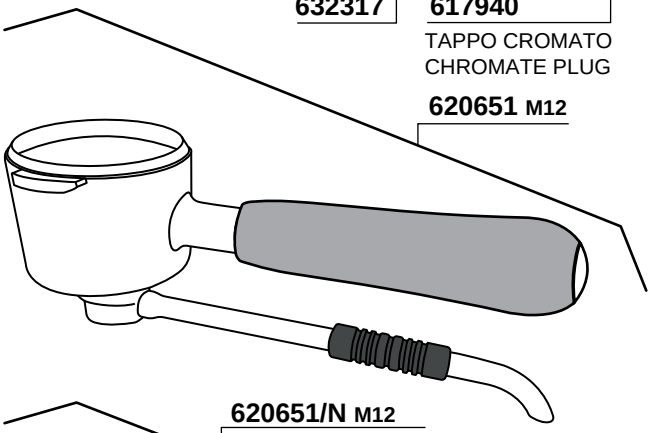

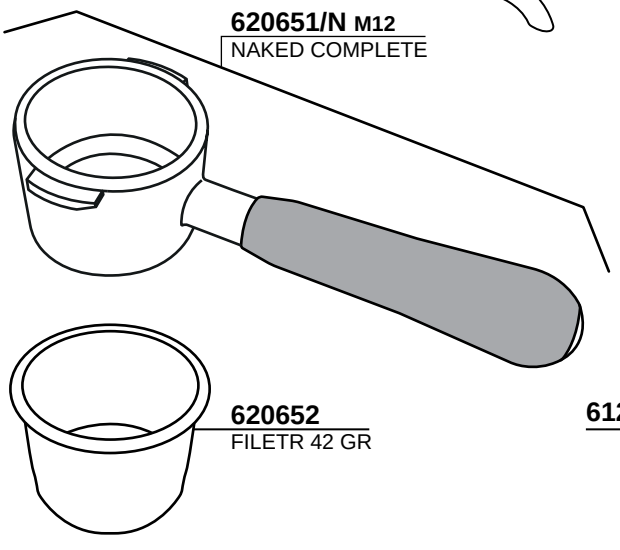



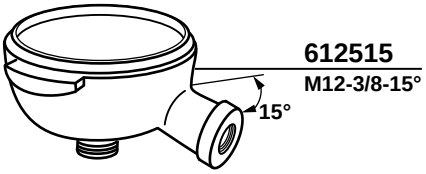

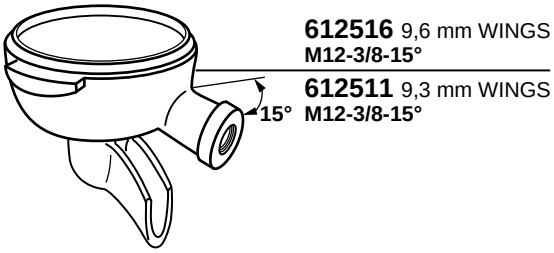

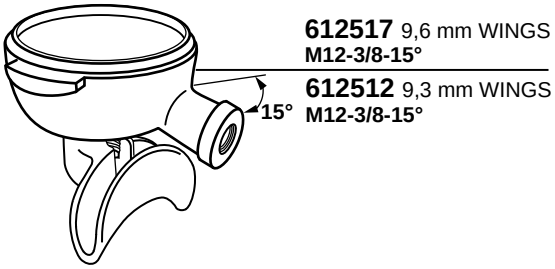

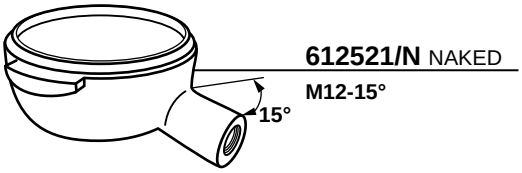

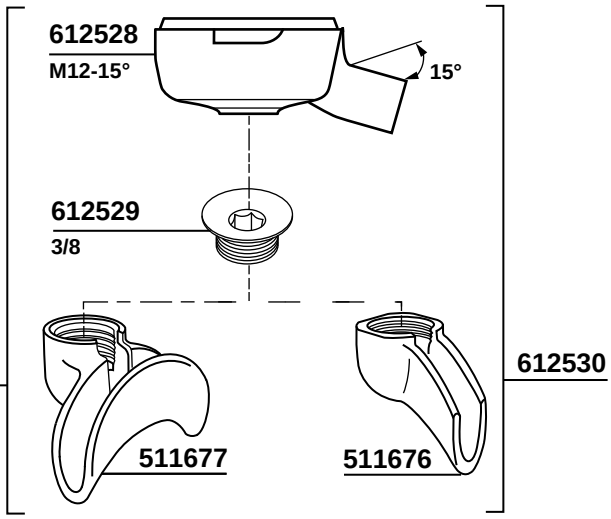

INOX STAINLESS STEEL

ASTORIA / CMA P4Y

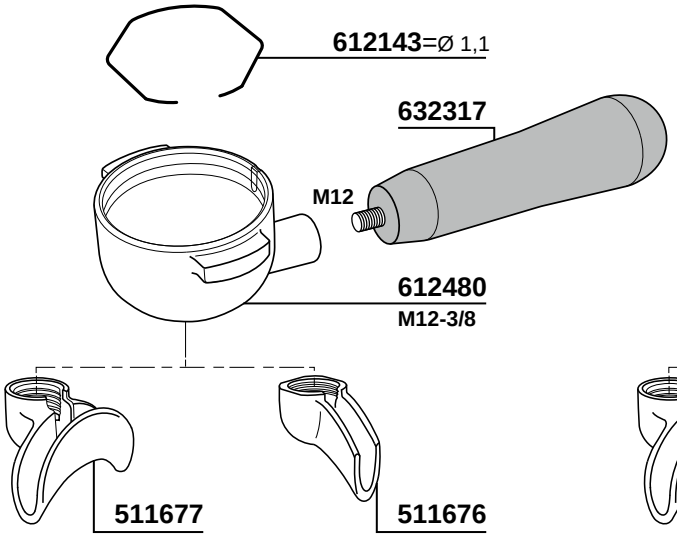

ASTORIA - BEZZERA - BRASILIA
FIORENZATO PIAZZA S.MARCO

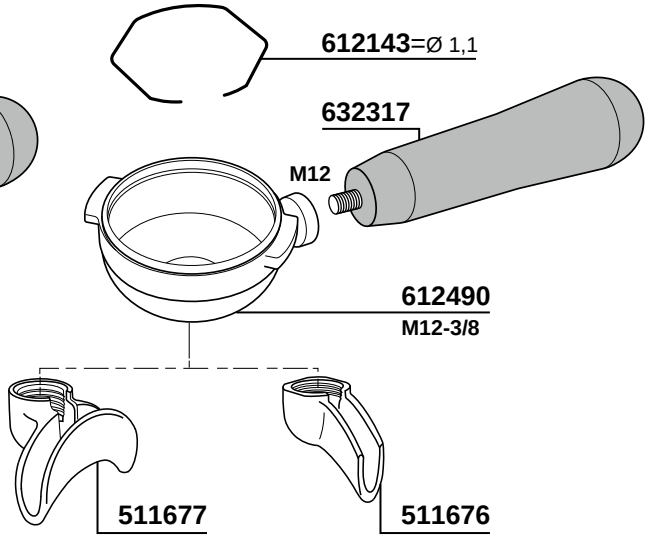

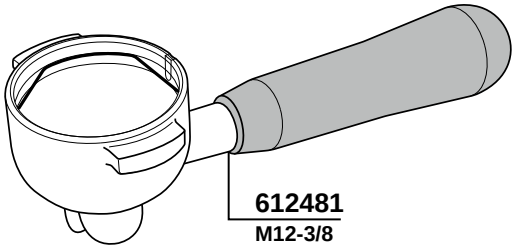

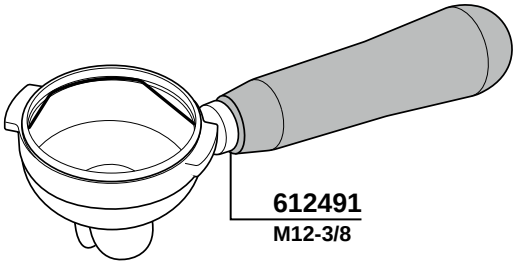

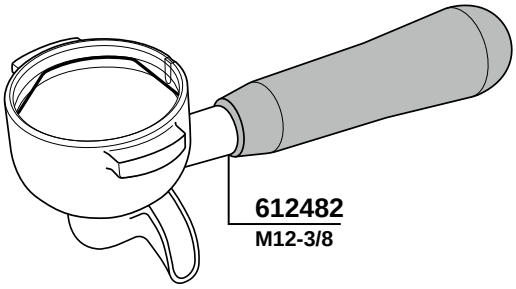

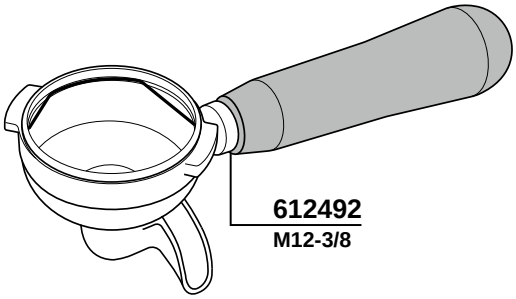

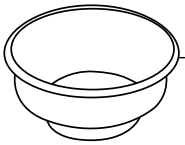

703535
FILTRO CIECO
BLIND FILTER

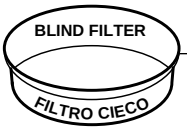

521901
521902

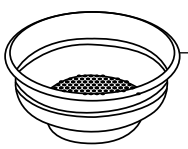

700579=6gr
526206=7gr

514417 5 gr
526418 6 gr
514418 6 gr
521834 6 gr
521830 7 gr
521835 7 gr
521832 8 gr
521833 7 gr
MICROFORI
MICROHOLES

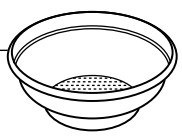

516575 12 gr
521998 12 gr
521994 14 gr
521997 14 gr
514419 14 gr
ridgeless
526208 18 gr
526757 21 gr
526758 24 gr
521996 14 gr
MICROFORI
MICROHOLES

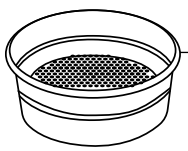

700598=12gr
526207=14gr

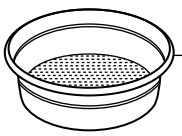

330

DETERGENTI PER MACCHINE DA CAFFE'

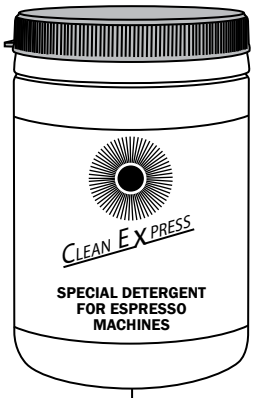

700019
900 gr

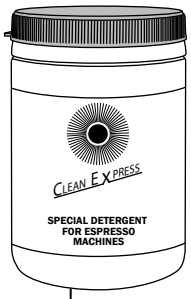

591182
60 TABLETS
2,5 gr each



591186
100 TABLETS
1 gr each



700020
1000 gr



591195
900 gr
591196
250 gr

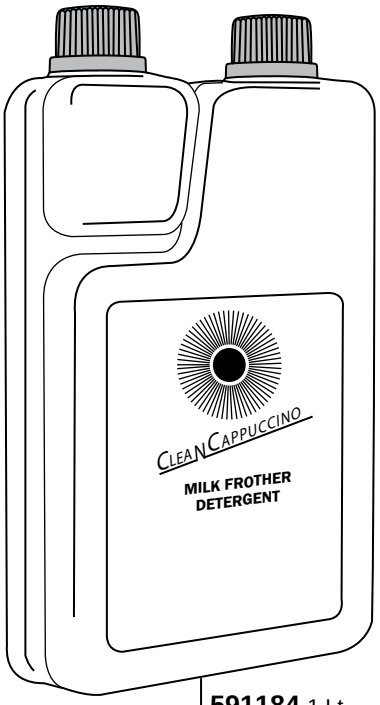

591184 1 Lt

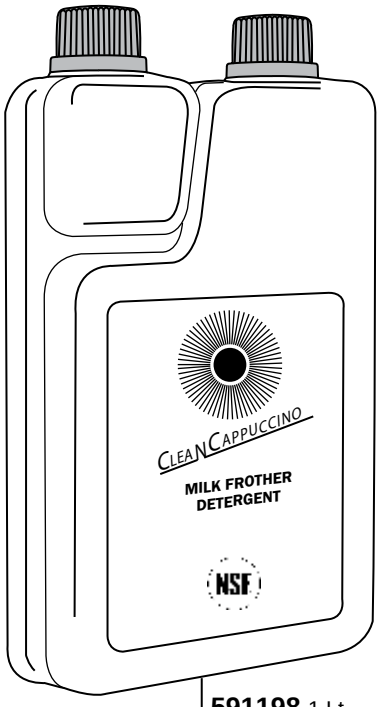

591198 1 Lt



591187 1 Lt

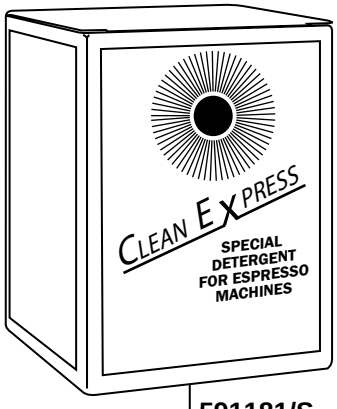

591181/S
15 SACHETS

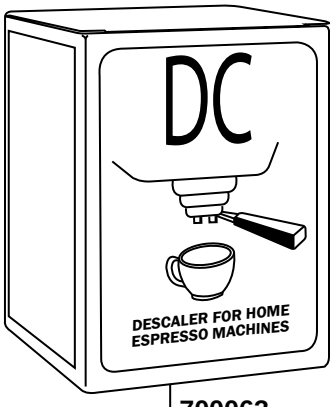

700063
12 SACHETS

DETERGENTI PER MACCHINE DA CAFFE'



591194 10 sachets
PULY GRIND CRYSTALS



591205
KIT PULY CAFF NSF



591208 900gr.
PULY CAFF NSF



591209 570gr.
PULY CAFF NSF



591210 370gr.
PULY CAFF NSF



591211 120 sachets
PULY CAFF NSF



591212 510gr.
PULY CAFF GREEN



591224 1000gr.
PULY CAFF GREEN



591213
60 tablets 2,5 gr. each
PULY CAFF NSF



591214
100 tablets 1,35 gr.
PULY CAFF NSF



591215
100 tables 1 gr.
PULY CAFF NSF



591216
70 tables 0,5 gr.
PULY CAFF NSF



591222
120 tables 4 gr.
PULY CAFFBREW NSF

DETERGENTI PER MACCHINE DA CAFFE'



591206 1 Lt.
PULY BAR IGIENIC



591217 200 ml.
PULY GRIND HOPPER



591218 1 Lt.
PULY MILK PLUS NSF



591220 1 Lt.
PULY MILK GREEN



591219 4 doses x 25 ml.
PULY MILK PLUS NSF



591226 14 doses x 25 ml.
PULY MILK PLUS NSF



591221 2 doses x 125 ml.
PULY DESCALER



591223 1000 ml.
PULY CAFF COLD-BREW



591225 1000 ml.
PULY MILK CAPUCINO

DETERGENTI



591188 6 kg
CON CLORO - WITH CHLORINE

591189 12 kg
CON CLORO - WITH CHLORINE

591192
SENZA CLORO - WITHOUT CHLORINE



591190 5 kg

591191 10 kg



591193 6 kg



N140 10 L.
CON CLORO - WITH CHLORINE



N141 10 L.

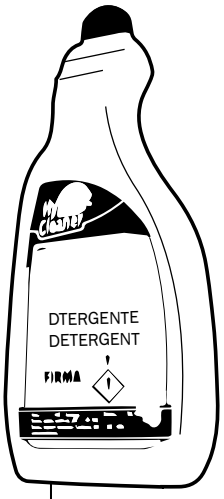

N131 0,75 L.



N143 1kg

620052
24 SACHETS



ARTICOLI MANUTENZIONE

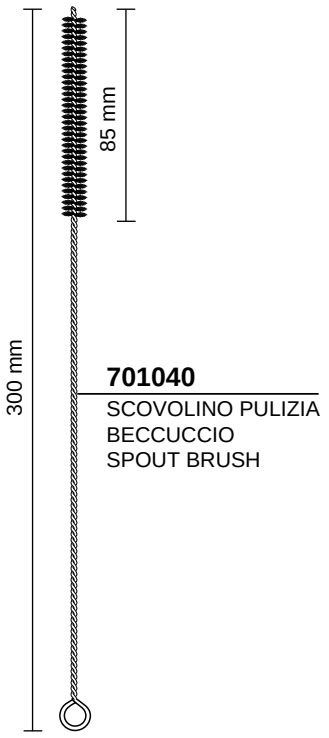

701040
SCOVOLINO PULIZIA BECCUCCIO
SPOUT BRUSH

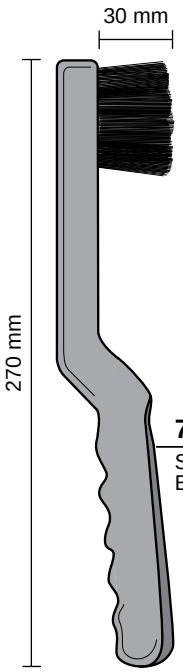

701045
SPAZZOLINO GRANDE
BIG BRUSH

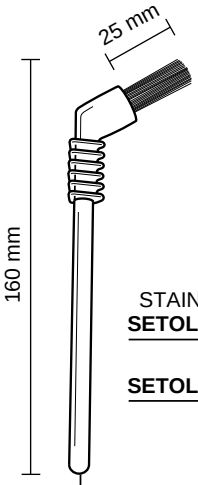

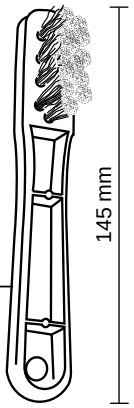

701009
SPAZZOLA ACCIAIO
STAINLESS STEEL BRUSH
SETOLE/BRISTLES L.30mm

701009/4
SETOLE/BRISTLES L.40mm

701038
ARANCIONE/ORANGE
SETOLE/BRISTLES Ø0,8mm

701038/N
NERO/BALCK
SETOLE/BRISTLES Ø0,8mm

701049
NERO/BALCK
SETOLE/BRISTLES Ø0,2mm

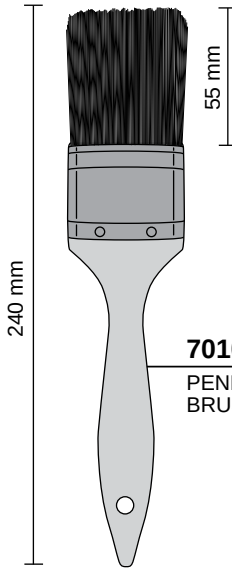

701048
PENNELLO
BRUSH

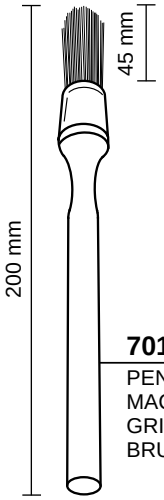

701013
PENNELLO PULIZIA MACINACAFFE'
GRINDER CLEANING BRUSH

701008
CACCIAVITE NANO
MINI SCREWDRIVER

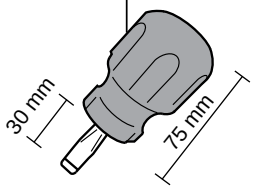

701007
PUNTERUOLO
AWL

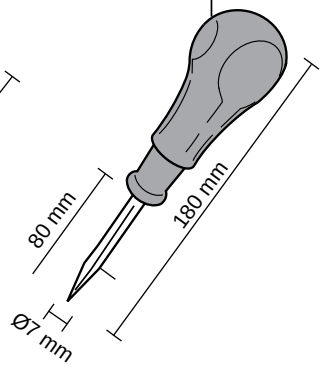

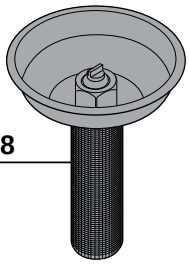

701088

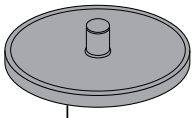

700613
Ø 50 mm

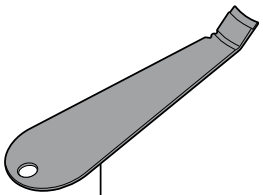

701086

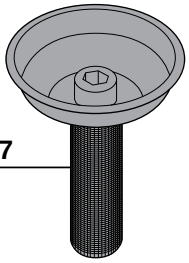

701087

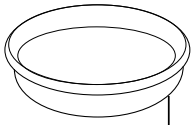

FILTRO CIECO
BLIND FILTER
521901 Ø 58 mm
STANDARD
700487 Ø 53 mm
SAN MARCO
703535 Ø 53 mm
SPAZIALE

ARTICOLI MANUTENZIONE



591675
6 gr

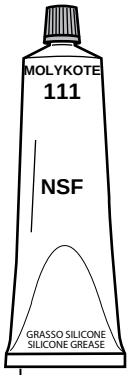

591659
100 gr

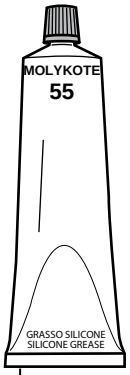

591660
100 gr

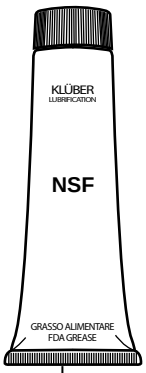

591661
95 gr



591672
25 gr

PASTA
TERMOCONDUTTRICE
PASTE
TERMOCONDUCTOR

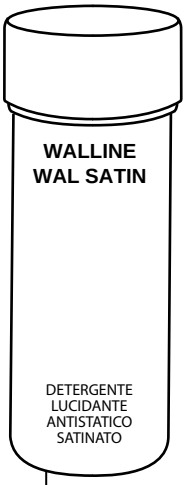

591197

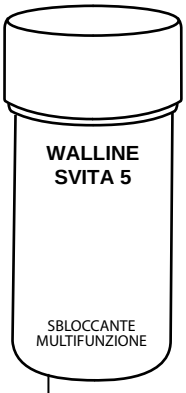

591199



591658
907 gr

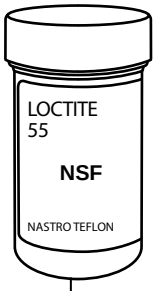

591671

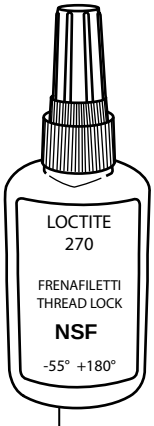

591673 50 ml



591674 50 ml

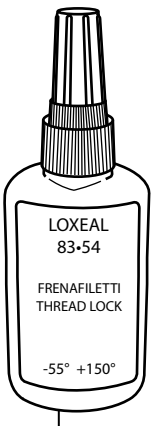

591667 50 ml

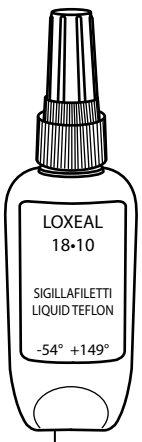

591669 50 ml

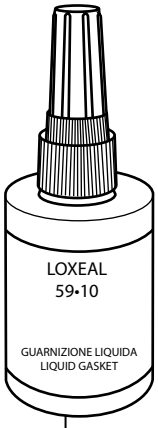

591670 75 ml

336

MOTOR CABLE CONNECTION

620745

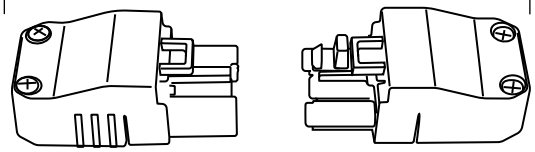

700069

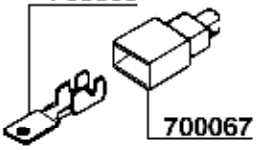

700067

Ø4

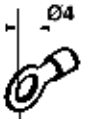

700070

700068

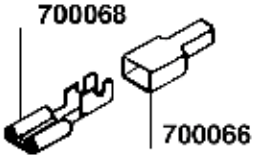

700066

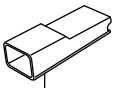

700062

Ø6



700071

614069 619291 617992 619292 619294

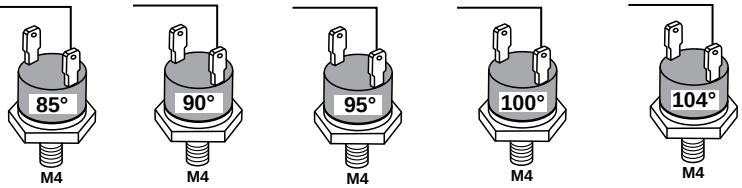

460204 618962

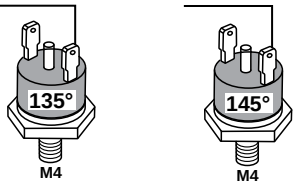

619293 617993 617994 617991 617991/G

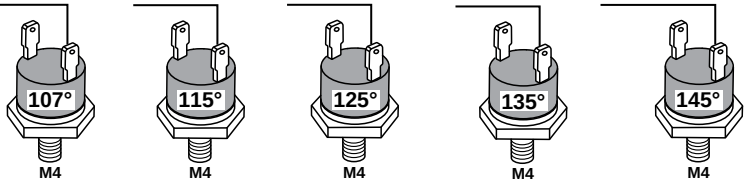

618964 617227

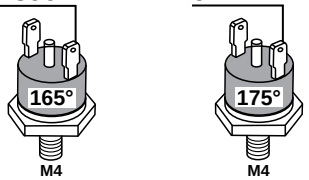

RIARMO MANUALE
MANUAL RESETTING

300001
125°

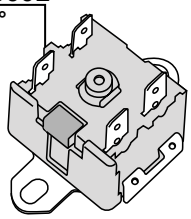

620646
100°

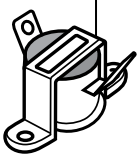

620647
140°

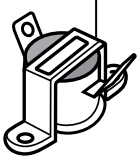

701812
127°

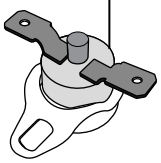

703492

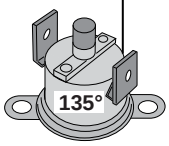

RIARMO MANUALE
MANUAL RESETTING

CAVO VETRO SILICONE
GLASS SYLICON HOSE

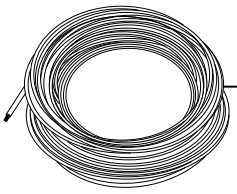

620750 1x4 mm

NASTRO ISOLANTE
ISOTAPE

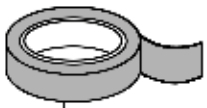

700065
mt.10x15mm



620721 10 mt - Ø 8 mm
GUAINA ELASTOMERO ROSSA

CAVO UNIPOLARE ISOLATO GOMMA SILICONE
UNIPOLAR SILICON-RUBBER INSULATED CABLE

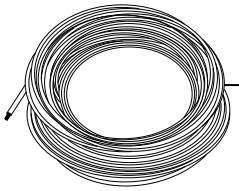

620717 1x2,5 mm MARRONE - BROWN
620718 1x2,5 mm GIALLO/VERDE - YELLOW/GREEN
620719 1x2,5 mm BLU - BLUE
620720 1x2,5 mm GRIGIO - GREY

CAVO FLESSIBILE NEOPRENE
CABLE FLEXIBLE NEOPRENE

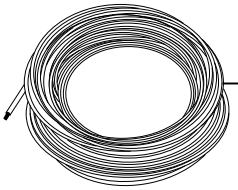

620722 3x2,5 mm
620723 4x2,5 mm
620746 5x2,5 mm

620424

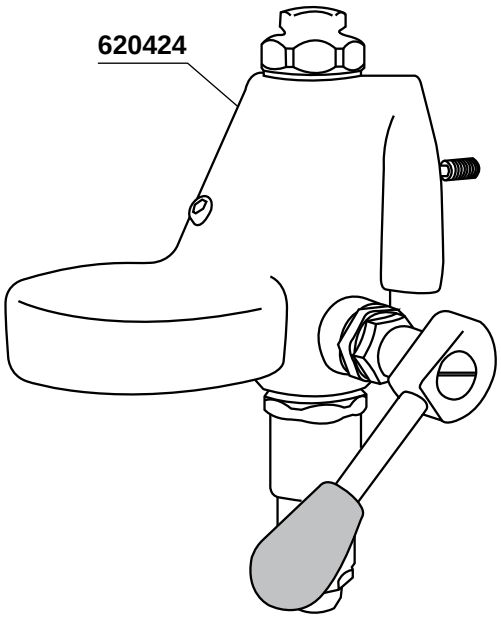

620423

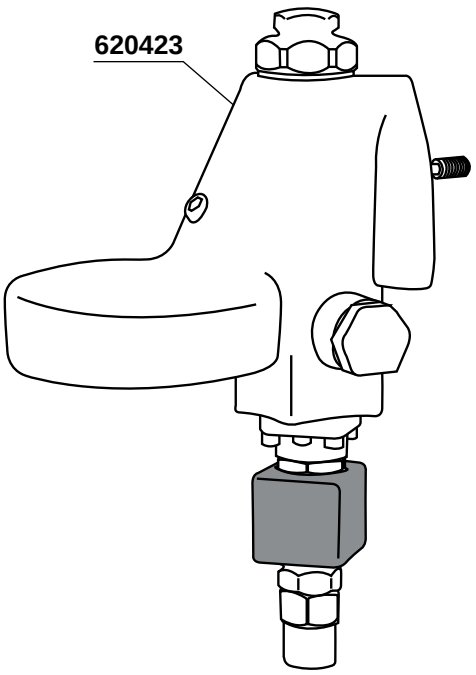

503049

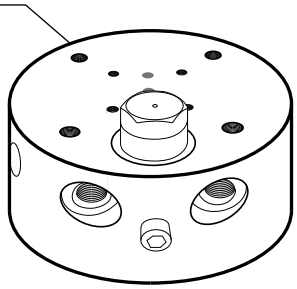

510001

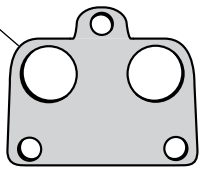

620429

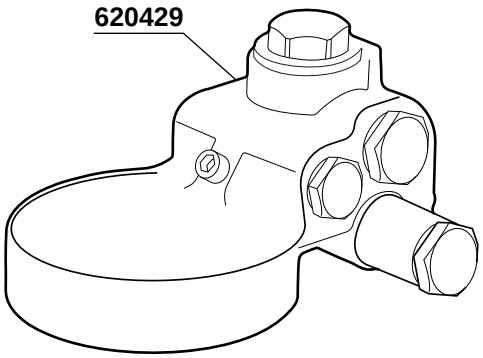

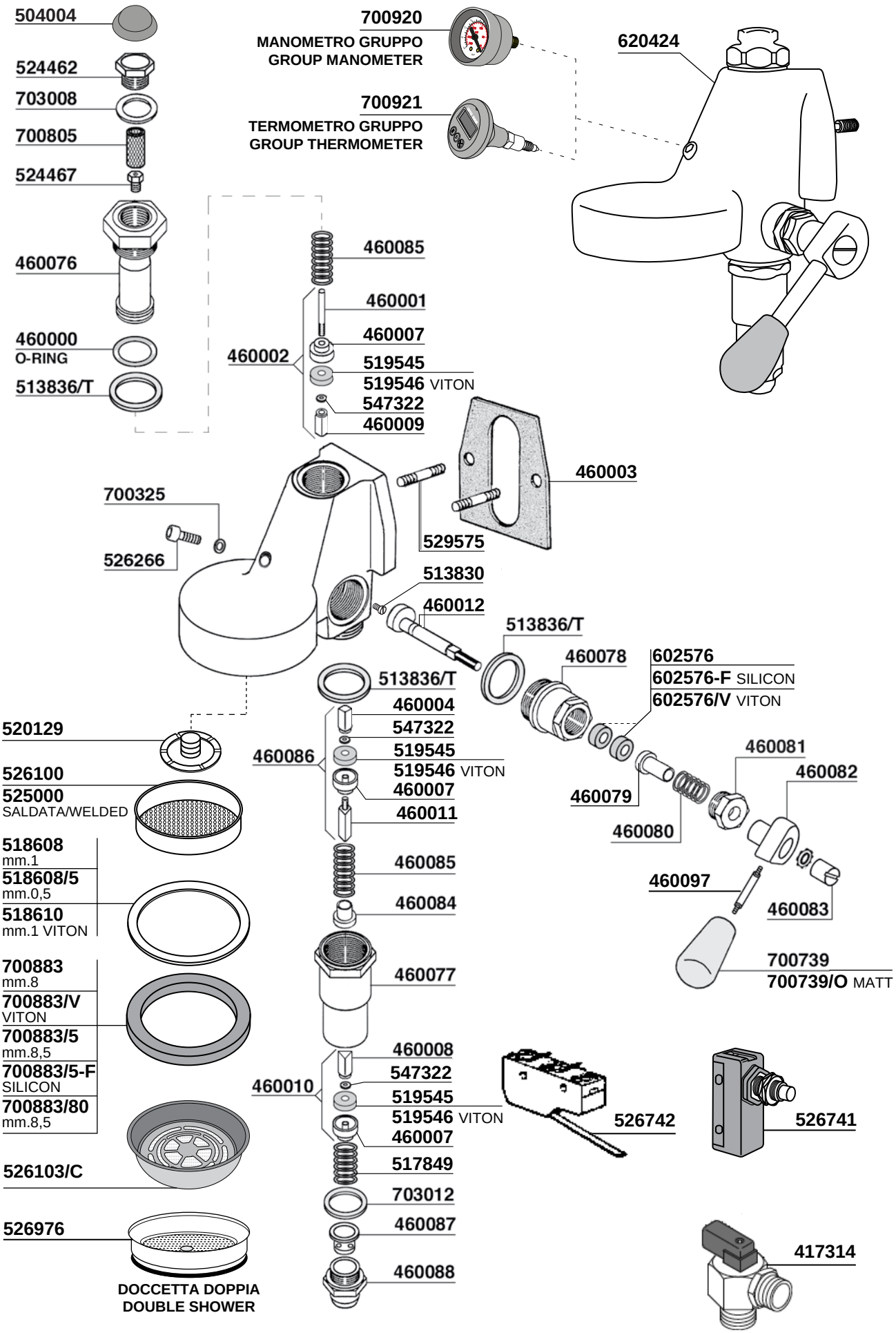
504004
524462
703008
700805
524467
460076
460000
O-RING
513836/T
700920
MANOMETRO GRUPPO
GROUP MANOMETER
700921
TERMOMETRO GRUPPO
GROUP THERMOMETER
620424
460085
460001
460007
460002
519545
519546 VITON
547322
460009
460003
700325
526266
529575
513830
460012
513836/T
460078
602576
602576-F SILICON
602576/V VITON
513836/T
460004
547322
460086
519545
519546 VITON
460007
460011
460081
460082
460079
460080
460085
460084
460097
460083
700739
700739/O MATT
460077
520129
526100
525000
SALDATA/WELDED
518608
mm.1
518608/5
mm.0,5
518610
mm.1 VITON
700883
mm.8
700883/V
VITON
700883/5
mm.8,5
700883/5-F
SILICON
700883/80
mm.8,5
526103/C
526976
DOCCETTA DOPPIA
DOUBLE SHOWER
460008
547322
460010
519545
519546 VITON
460007
517849
703012
460087
460088
526742
526741
417314

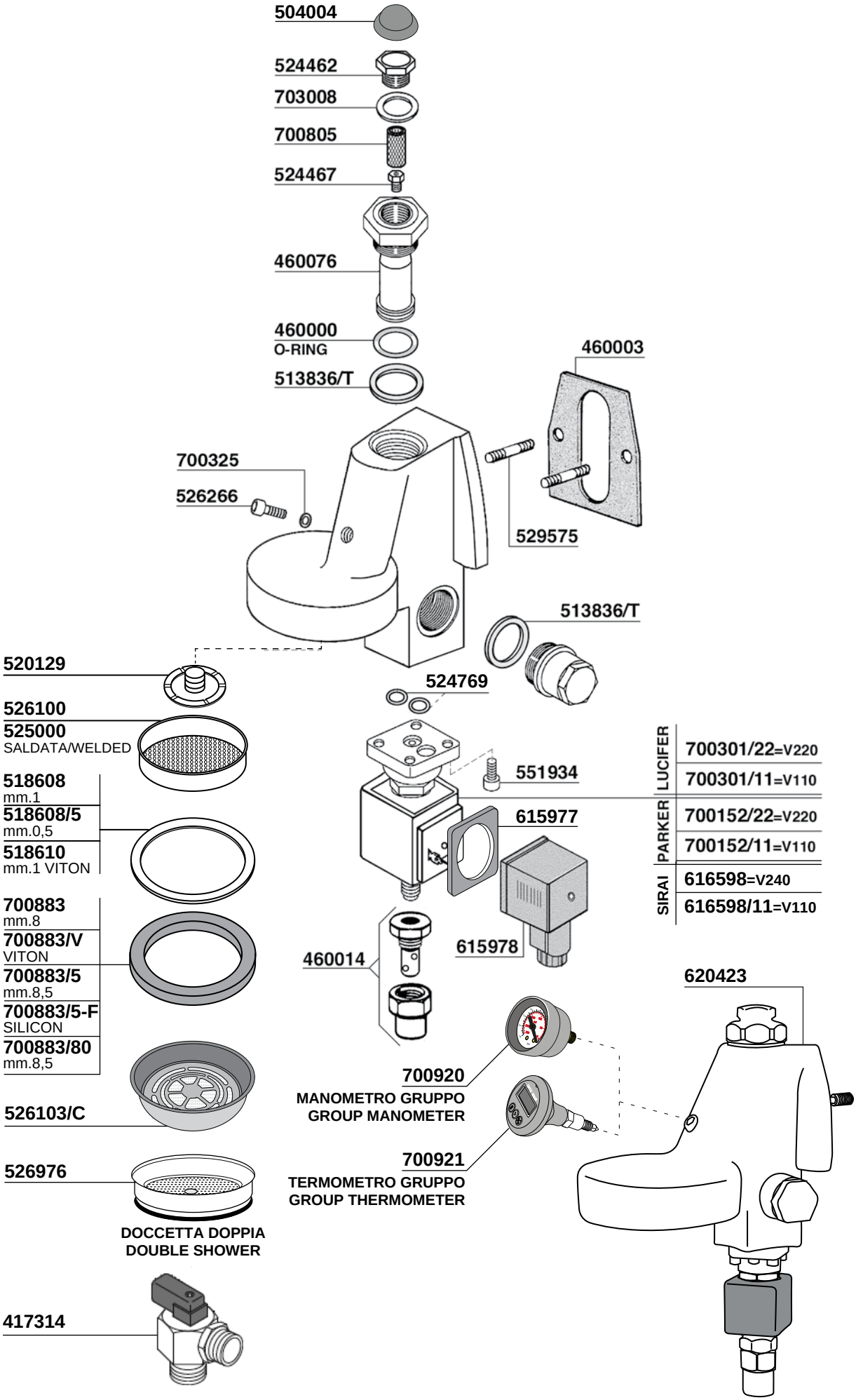
504004
524462
703008
700805
524467
460076
460000
O-RING
513836/T
460003
700325
526266
529575
513836/T
524769
520129
526100
525000
SALDATA/WELDED
518608
mm.1
518608/5
mm.0,5
518610
mm.1 VITON
700883
mm.8
700883/V
VITON
700883/5
mm.8,5
700883/5-F
SILICON
700883/80
mm.8,5
526103/C
526976
DOCCETTA DOPPIA
DOUBLE SHOWER
417314
551934
615977
615978
460014
LUCIFER
700301/22=V220
700301/11=V110
PARKER
700152/22=V220
700152/11=V110
SIRAI
616598=V240
616598/11=V110
620423
700920
MANOMETRO GRUPPO
GROUP MANOMETER
700921
TERMOMETRO GRUPPO
GROUP THERMOMETER

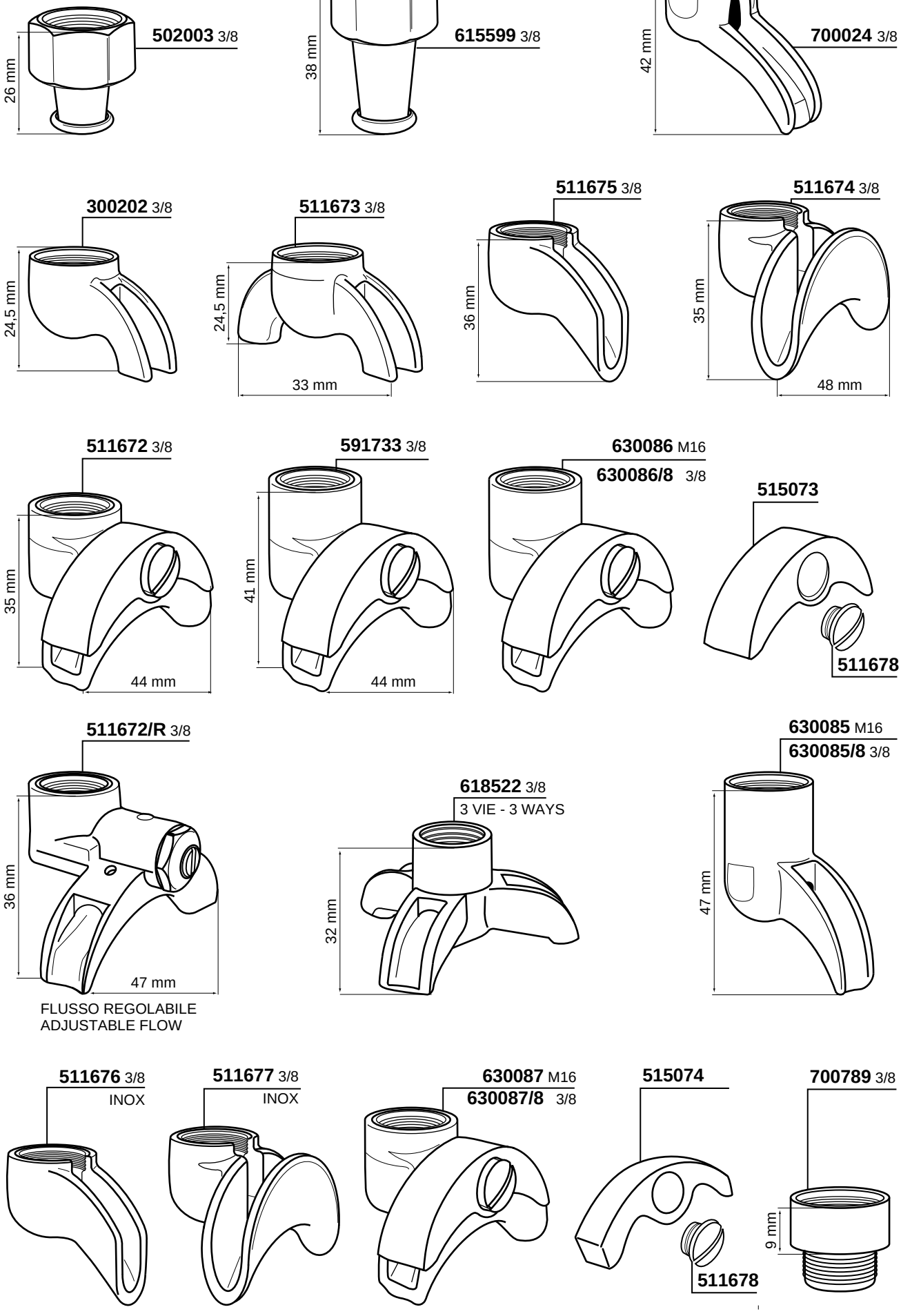
502003 3/8
26 mm
615599 3/8
38 mm
700024 3/8
42 mm
300202 3/8
24,5 mm
511673 3/8
24,5 mm
33 mm
511675 3/8
36 mm
511674 3/8
35 mm
48 mm
511672 3/8
35 mm
44 mm
591733 3/8
41 mm
44 mm
630086 M16
630086/8 3/8
515073
511678
511672/R 3/8
36 mm
47 mm
FLUSSO REGOLABILE
ADJUSTABLE FLOW
618522 3/8
3 VIE - 3 WAYS
32 mm
630085 M16
630085/8 3/8
47 mm
511676 3/8
INOX
511677 3/8
INOX
630087 M16
630087/8 3/8
515074
511678
700789 3/8
9 mm

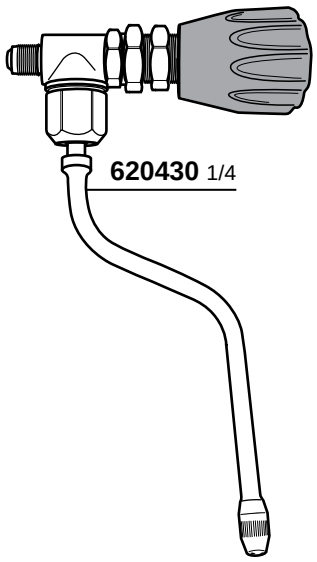

620430 1/4

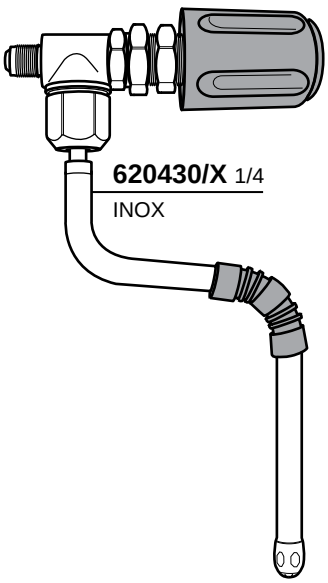

620430/X 1/4
INOX

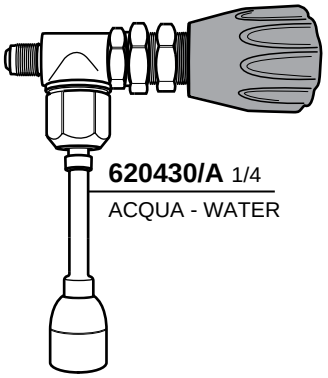

620430/A 1/4
ACQUA - WATER

620426
620426/X
STAINLESS STEEL

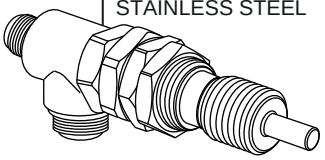

620426/F

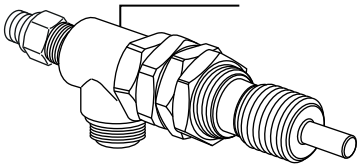

620425

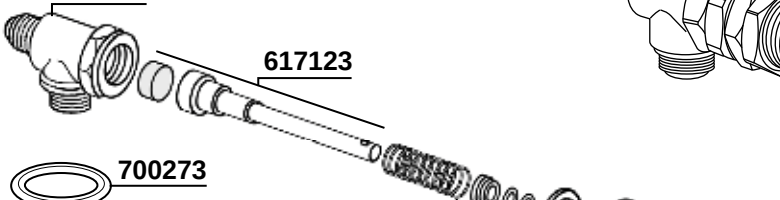

617123

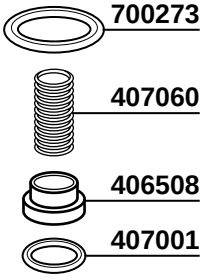

700273
407060
406508
407001

603918
530015
524767
O-RING
524558

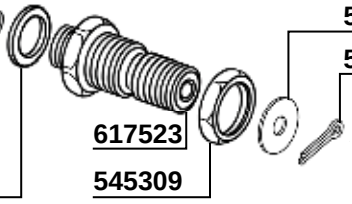

617523
545309

543424
524965

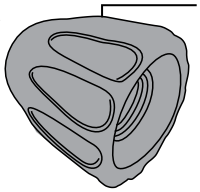

632324

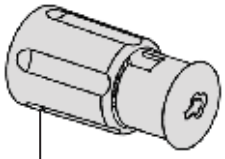

630495



632321
TAPPO CROMATO
CHROMED PLUG



632323
TAPPO CROMATO
CHROMED PLUG

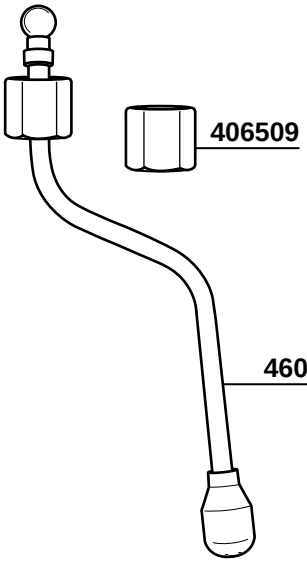

406509
460058

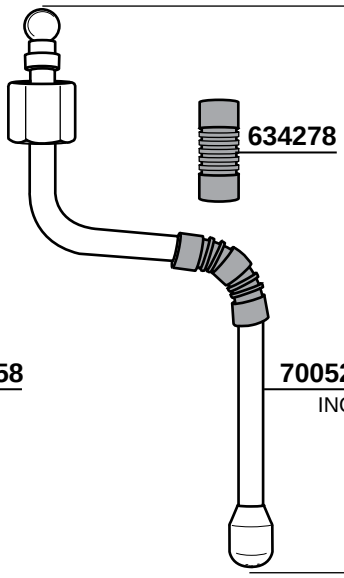

634278
700525
INOX
17 cm

401405

404662 4 FORI
404662/2 2 FORI

633432
O-RING

703472/M 4 FORI
633429 2 FORI

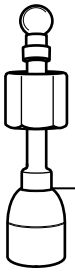

300045 3/8
ACQUA - WATER

400835

446122

VARI COMPONENTI

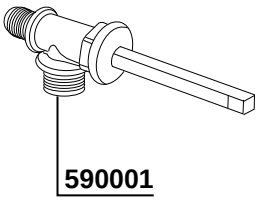

590001

RUBINETTO CARICO
WATER INLET

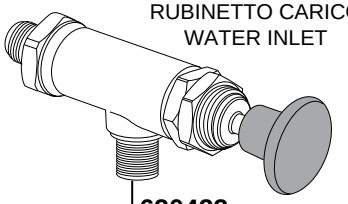

620422

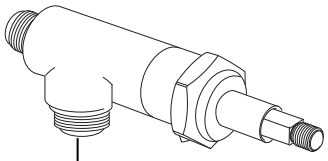

590005
CROMATO-CHROMED

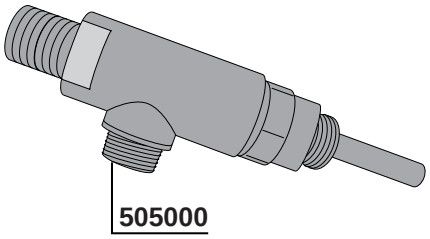

505000

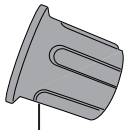

505001 VAPORE-STEAM
505003 ACQUA-WATER

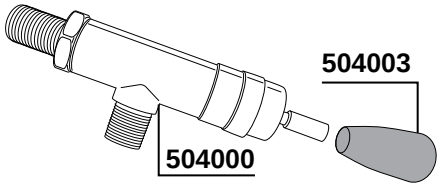

504003

504000

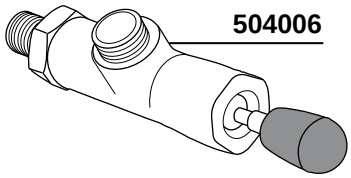

504006

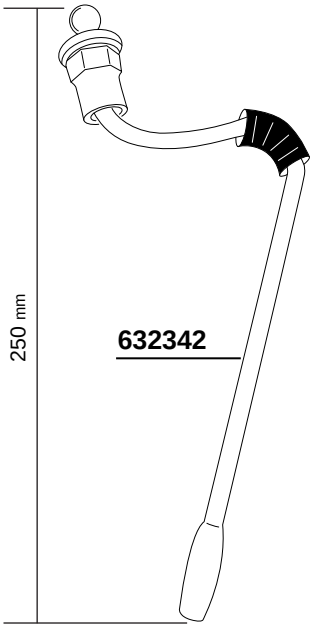

632342

530138



633433 3 HOLES
633433/4 4 HOLES

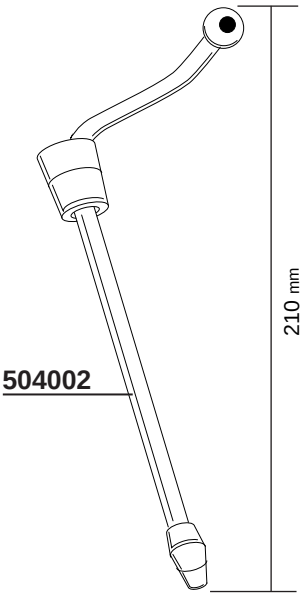

504002

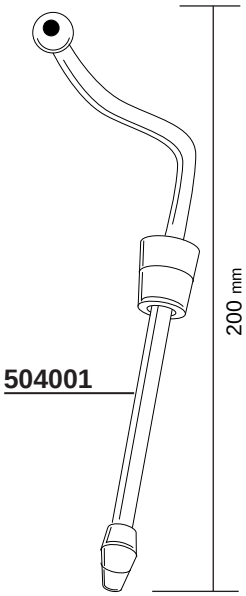

504001

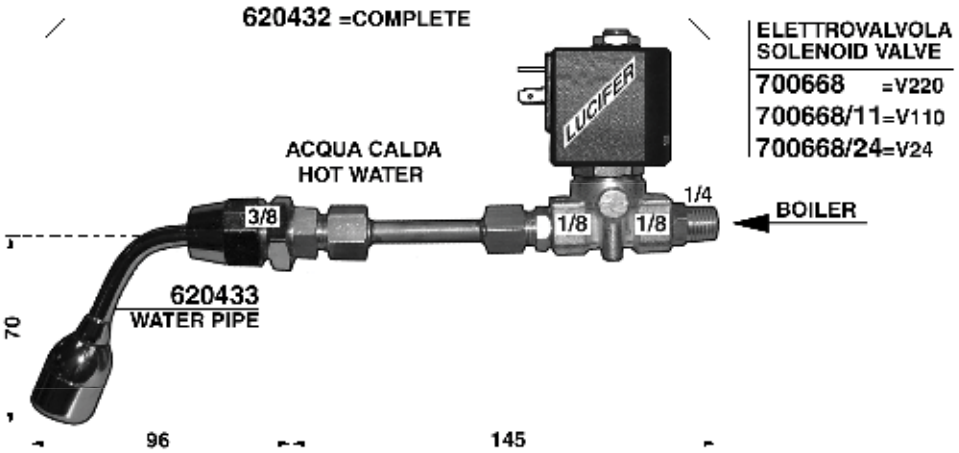

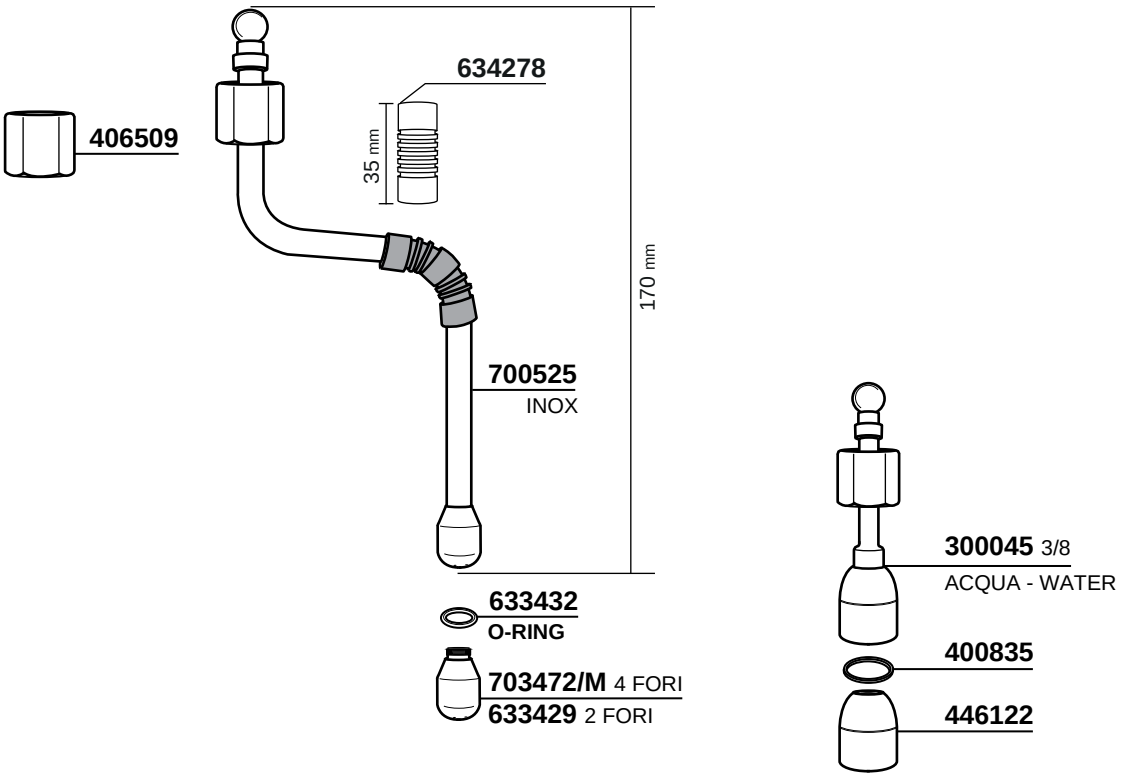

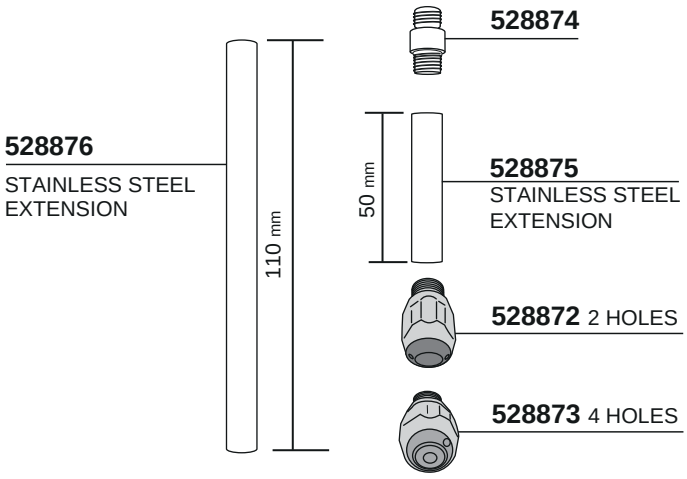

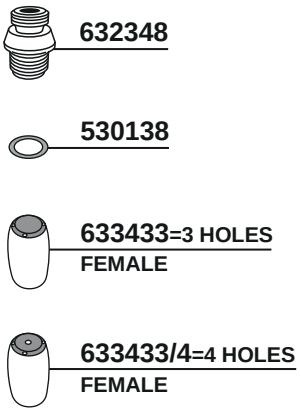

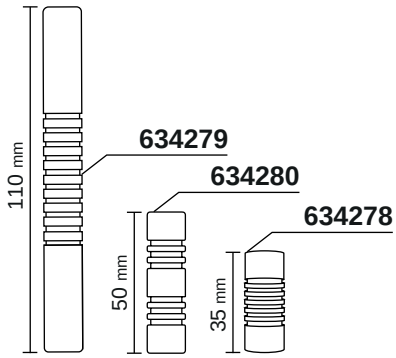

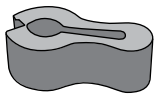

411972 ø 10

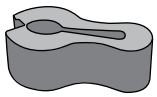

412954 ø 8

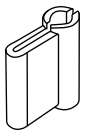

700754
ANTISCOTTATURA
ANTISCORCHING

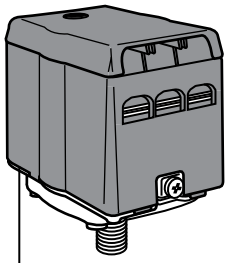

SIRAI
616592 CE

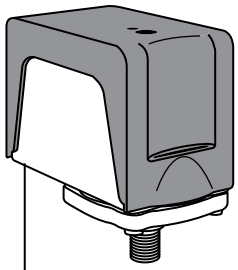

SIRAI
616597 CE/UL

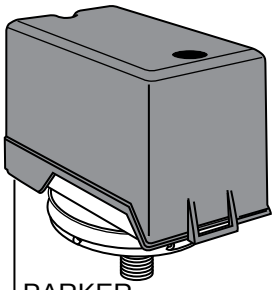

PARKER
616599 CE/UL

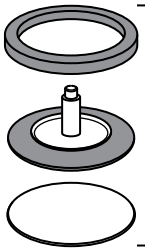

700124
ø 55 mm

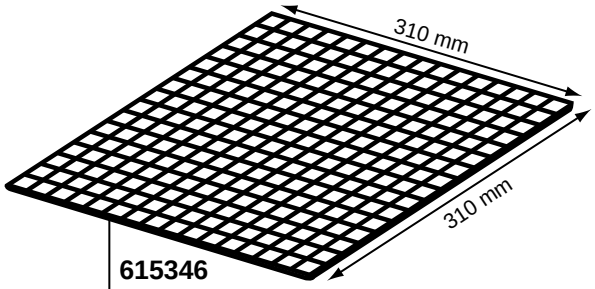

615346
NERO - BLACK

611647
BIANCO - WHITE

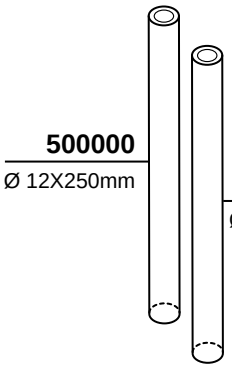

500000
Ø 12X250mm

500001
Ø 11X250mm

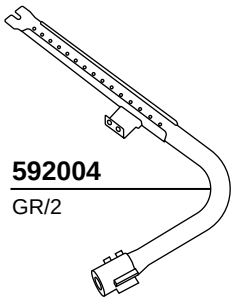

592004
GR/2

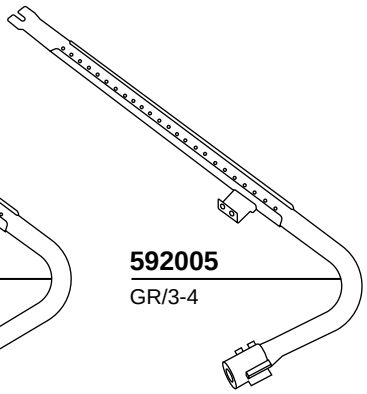

592005
GR/3-4

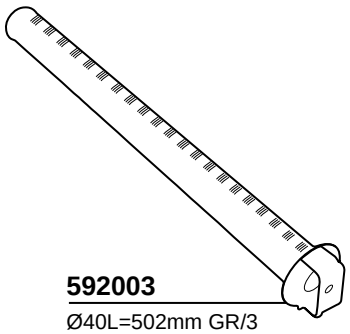

592003
Ø40L=502mm GR/3

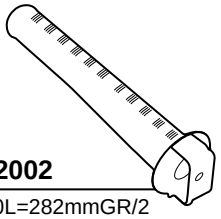

592002
Ø40L=282mmGR/2

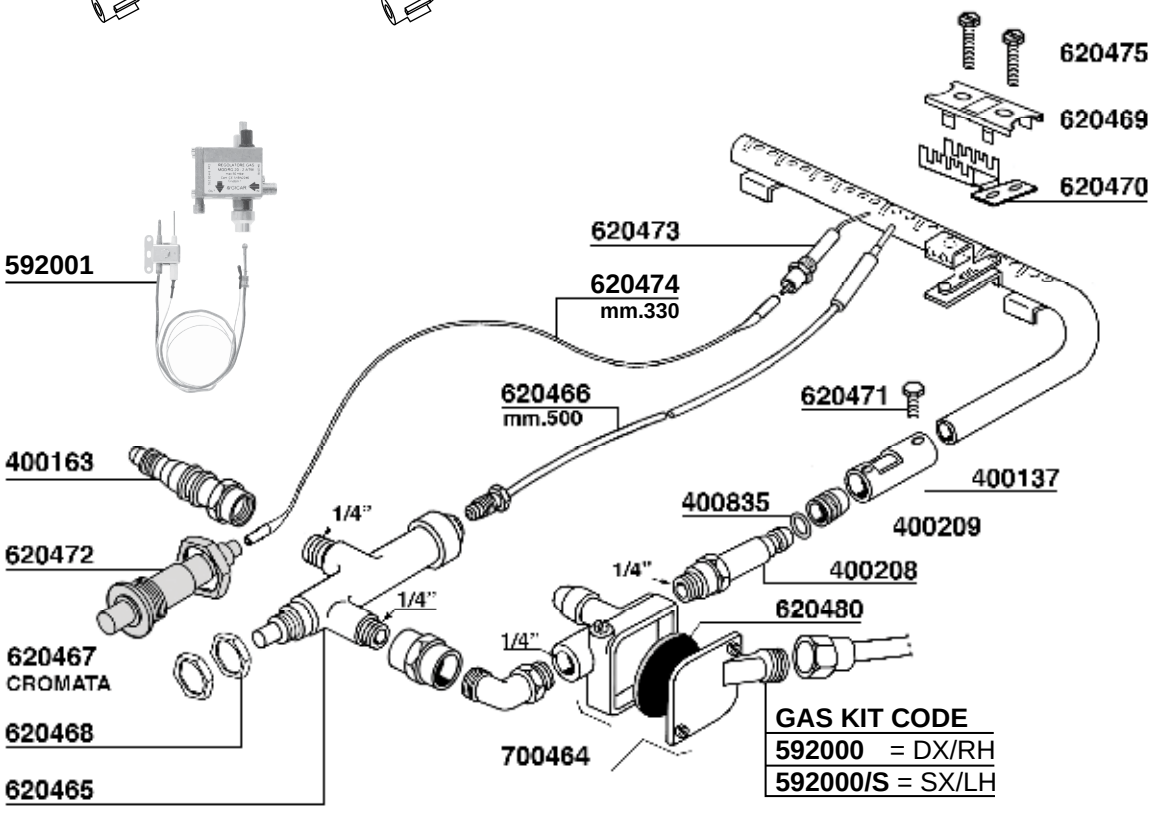

VARI COMPONENTI Tav. 41

615624/A
certificato
certified
3/8
524555

615625/A
certificato
certified
3/8
524555

615626/A
certificato
certified
1/2
524552/R

615623/A
certificato
certified
1/4
524554

700217
3/8
524555

700857
M22
700898

618968
1/4
524554

615623
1/4
524554

700750/V
1/4
524554

700268
M19
524556

618969
ø 8
1/4
524554

615631/A
certificato
certified
1/8
700231

618970
1/4

581788
1/4

700375
3/8
524555

615631
1/8
700231

503052

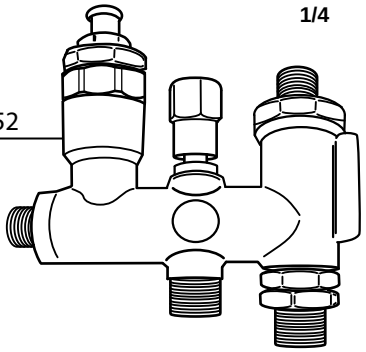

503009

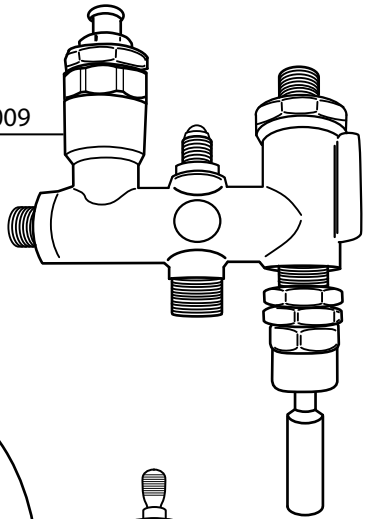

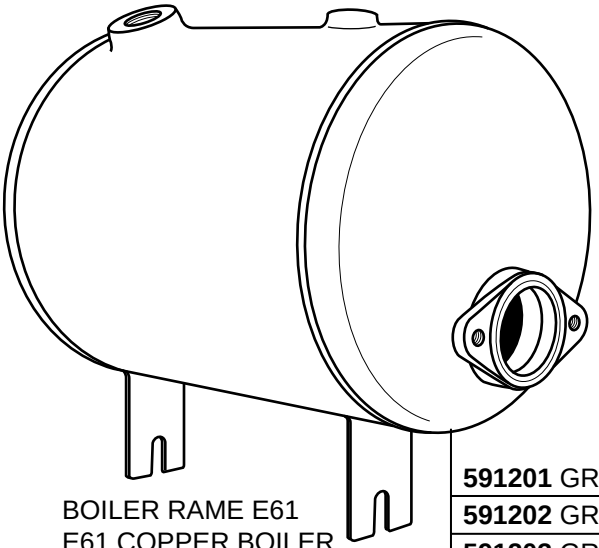

BOILER RAME E61
E61 COPPER BOILER

591201 GR1
591202 GR2
591203 GR3

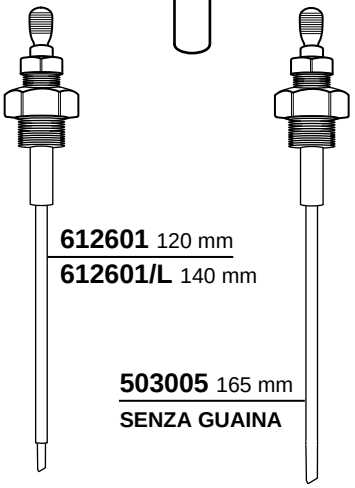

612601 120 mm
612601/L 140 mm

503005 165 mm
SENZA GUAINA

618967
524554

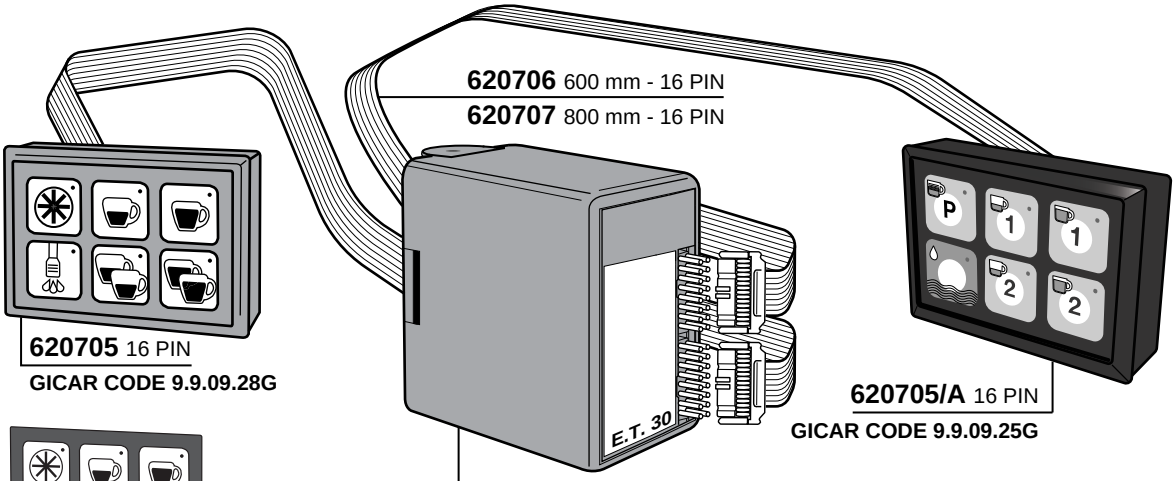

620706 600 mm - 16 PIN
620707 800 mm - 16 PIN

620705 16 PIN
GICAR CODE 9.9.09.28G

620705/A 16 PIN
GICAR CODE 9.9.09.25G

620748
GICAR CODE 8.9.48.76

620701 GR1-2 - 220V - 16 PIN
THE + AUTOLIVELLO
GICAR CODE 9.5.24.00G 00
620733 GR2 - 230V - 12 PIN
GICAR CODE 9.5.24.20G

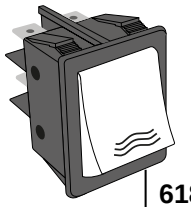

618013
WATER SWITCH

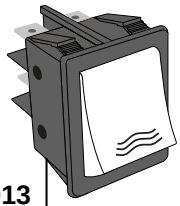

618013
WATER SWITCH

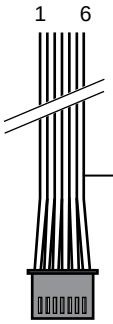

620708
6 PIN 800 mm

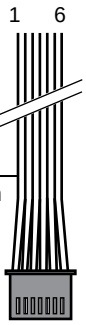

620708
6 PIN 800 mm

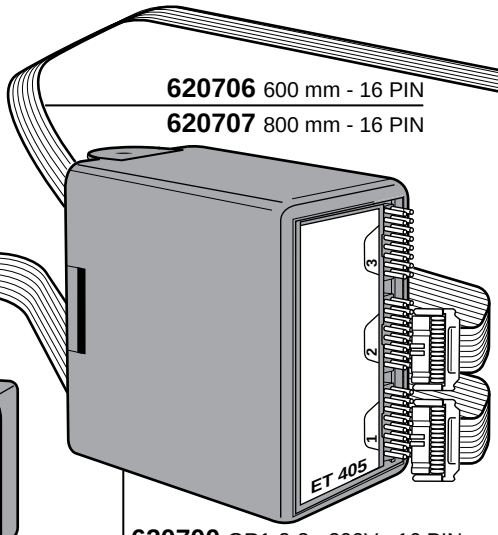

620706 600 mm - 16 PIN
620707 800 mm - 16 PIN

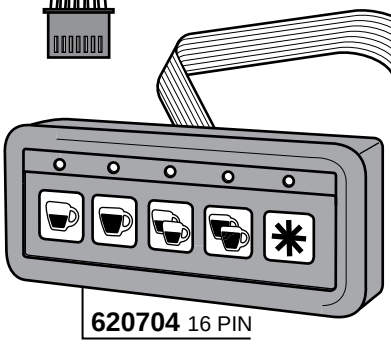

620704 16 PIN
GICAR CODE 9.9.09.50G

620700 GR1-2-3 - 200V - 16 PIN
THE + AUTOLIVELLO
GICAR CODE 9.5.23.16G 00

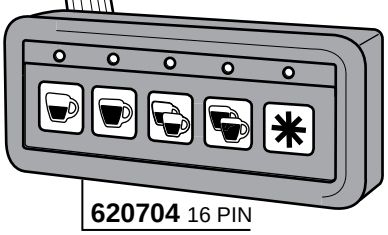

620704 16 PIN
GICAR CODE 9.9.09.50G

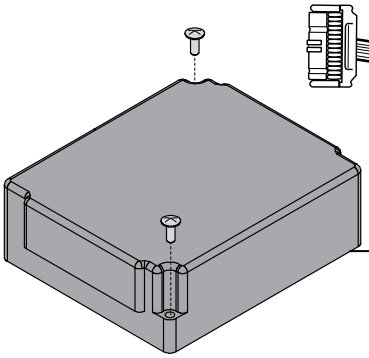

620706 600 mm - 16 PIN
620707 800 mm - 16 PIN

502109
GICAR CODE 9.5.22.69G 00

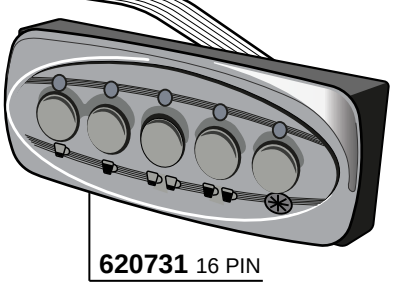

620731 16 PIN
GICAR CODE 9.9.13.97G

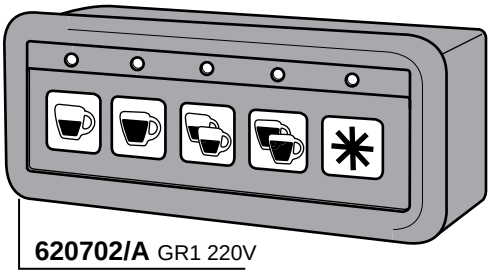

620702/A GR1 220V

PULSANTIERA+CENTRALINA+AUTOLIVELLO
TOUCH PAD+ELECTRONIC BOX+AUTOFILL
GICAR CODE 9.5.28.14G 00

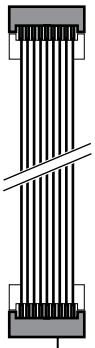

620714
8 PIN 800 mm

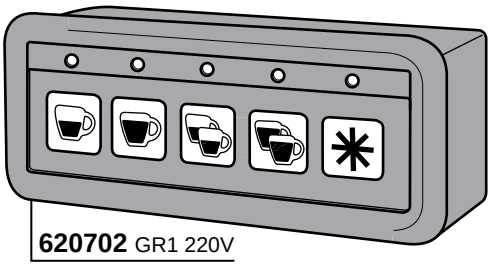

620702 GR1 220V

PULSANTIERA+CENTRALINA+THE
TOUCH PAD+ELECTRONIC BOX+TEA
GICAR CODE 9.5.28.34G 00

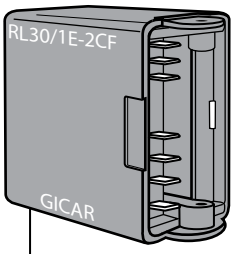

AUTOLIVELLO - AUTOFILL
700737 220V
GICAR CODE 9.1.40.71G
700737/11 110V
GICAR CODE 9.1.40.70G



620739
10 PIN 1100 mm

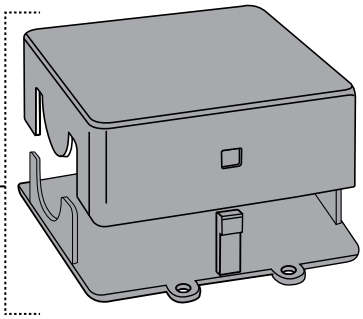

620747
GICAR CODE 6.0.36.86

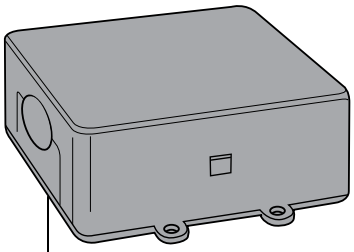

620732
3D5 LC 3GRCT 3TEA 230V
GICAR CODE 9.5.22.09G 01

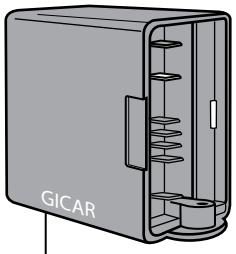

703382
GICAR CODE 9.1.41.22G02

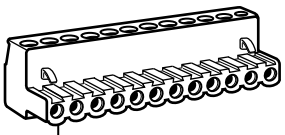

620709/4 4 PIN
620709/6 6 PIN
410453 7 PIN
620709/8 8 PIN
620709/10 10 PIN
620709 12 PIN
620709/13 13 PIN

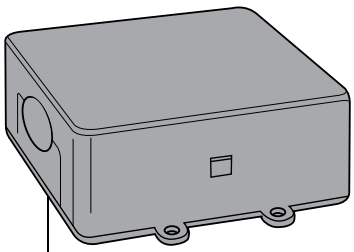

504005
GICAR CODE 9.5.22.50G 00

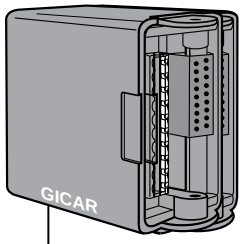

620740
GICAR CODE 9.5.17.80G 06

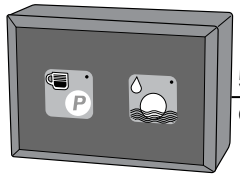

560086
GICAR CODE 9.9.09.01G

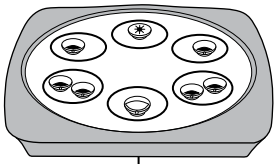

620743
GICAR CODE 9.9.14.68G

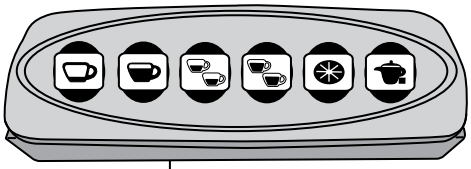

620734
GICAR CODE 9.9.07.41G

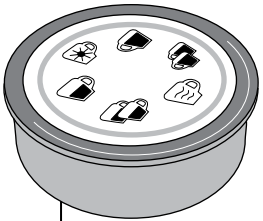

620741
GICAR CODE 9.9.13.26G



620742
GICAR CODE 9.9.13.53G

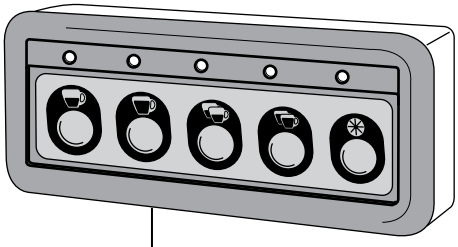

620736 16 PIN
GICAR CODE 9.9.08.83G

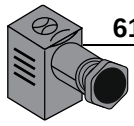

615978/T



615979

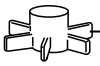

617903/G



530143

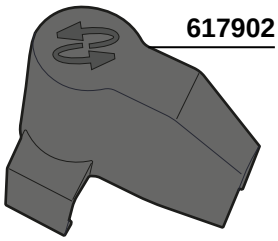

617902

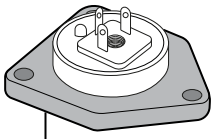

620405/C

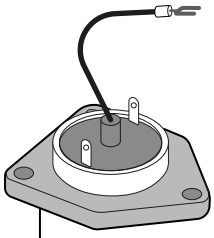

700868/OTC

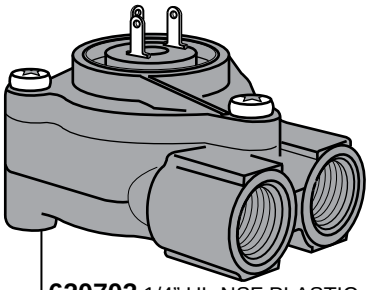

620703 1/4" UL-NSF PLASTIC

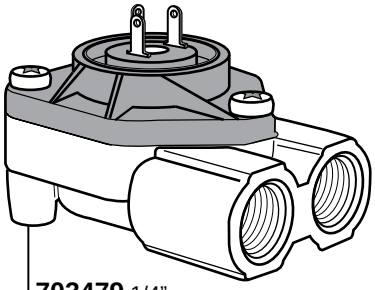

703479 1/4"

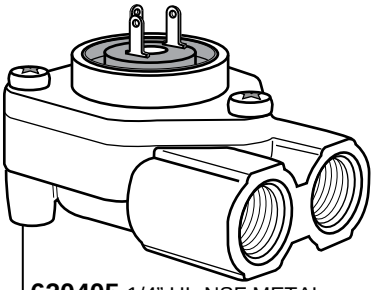

620405 1/4" UL-NSF METAL
620404 1/8" UL-NSF METAL

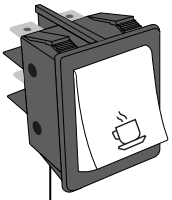

618011
BREW SWITCH

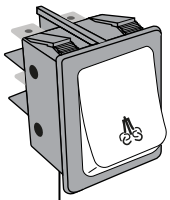

300040
STEAM SWITCH

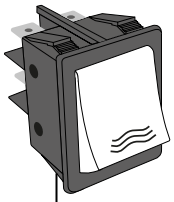

618013
WATER SWITCH

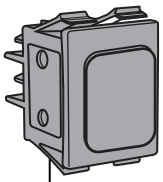

300042
RED LIGHT

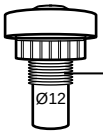

402629

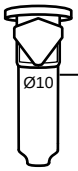

402627
COVER

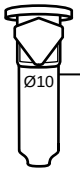

402628
COVER

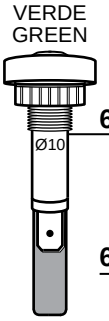

617733 220V

617734 220V

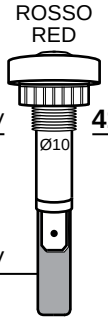

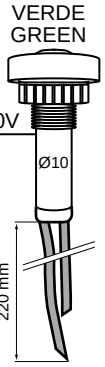

417583 230V

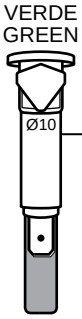

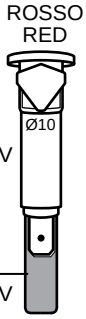

617732 220V
617732/11 110V

617730 220V
617730/11 110V

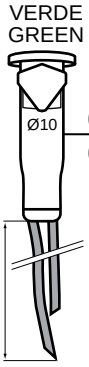

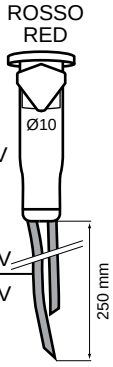

615512 220V
615512/11 110V

615511/22 220V
615511/11 110V

VARI COMPONENTI Tav. 45

ELETTROVALVOLE

ELETTROVALVOLE 3 VIE TENUTA RUBINO - 3 WAYS SOLENOID VALVES RUBY SEAL



PARKER 0-10bar

700152/22	V220/50/60
700152/11	V110/60
100246	V24 DC

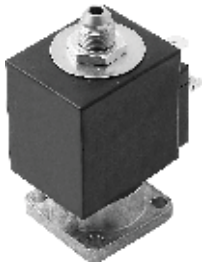

SIRAI 0-10 bar

616598	V208/240/50/60
616598/11	V110/60

FLAT



PARKER 0-10bar

700153/22	V220/50/60
700153/11	V110/60
700270	V24/50/60

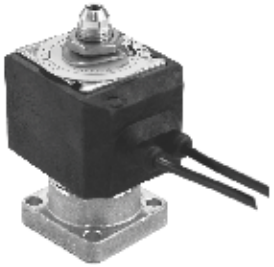

PARKER 0-10 bar

576288/22	V220/50/60
576288/11	V110/60



LUCIFER 0-10 bar

700301/22	V220/50/60
700301/11	V110/60
700301/24	V24/50/60
619276	V24 DC



O D E 0-15 bar

300304	V220/50/60
300304/11	V110/60
300304/24	V24/50/60

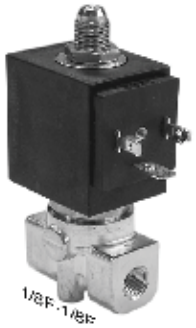

O D E 0-15 bar

300065	V220/50/60
300065/11	V110/60

ACCIAIO - STEEL



PARKER 0-10 bar

700174	V220/50/60
700174/11	V110/60
700174/24	V24/50/60



LUCIFER 0-14 bar

700175	V220/50/60
700175/11	V110/60
700175/24	V24/50/60



SIRAI 0-14 bar

616581	V240/60



SIRAI 0-20 bar

616582	V230/50/60

TENUTA VITON - VALVES VITON SEAL

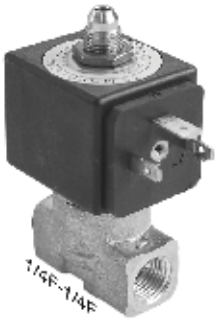

PARKER 0-10 bar

632018/22	V220/50/60
632018/11	V110/60
632018/24	V24/50/60



OLAB 0-14 bar

401984	V220/50/60
401984/11	V110/60

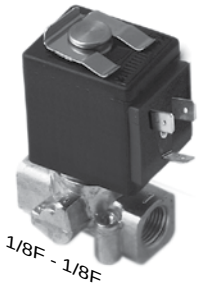

SIRAI 0-20 bar

616593	V230/50/60



SIRAI 0-30 bar

616594	V220/50

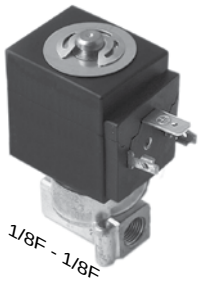

SIRAI 0-20 bar

616595	V220/50

ELETTROVALVOLE

2 WAYS SOLENOID VALVES VITON SEAL

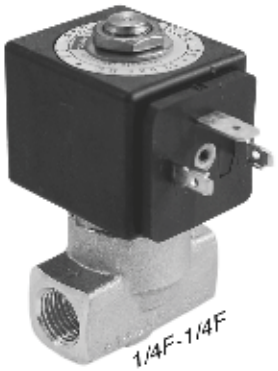

PARKER Ø 2,5
632017/22 V220/50/60
632017/11 V110/60
632017/24 V24/50/60

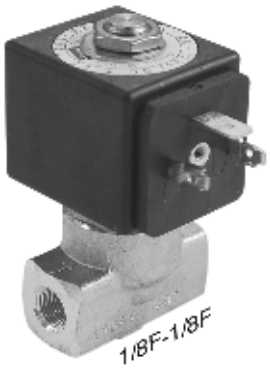

PARKER Ø 2,5
700869/22 V220/50/60
700869/11 V110/60
700869/24 V24/50/60



PARKER Ø 2,5
634294/22 V220/50/60
634294/11 V110/60
634294/24 V24/50/60



PARKER
601604 V220/50/60



LUCIFER Ø 2,5
700668 V220/50/60
700668/11 V110/60
700668/24 V24/50/60

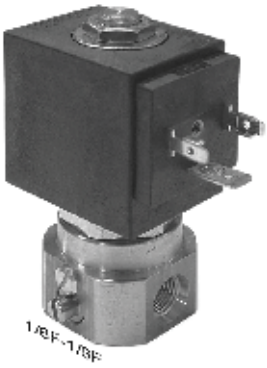

ADJUSTABLE
O D E Ø 0÷2,5
560066 V220/50/60
560066/11 V110/60

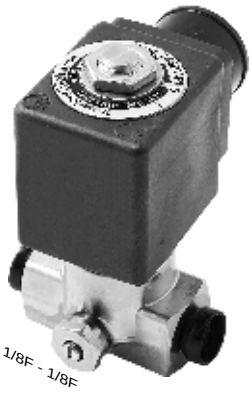

ADJUSTABLE
PARKER Ø 1,5
616580 V220/240



O D E
300235 V220/50/60
300235/11 V110/60



LUCIFER Ø 2,5
700670



PARKER Ø 2,5
700872



PARKER Ø 2,5
700873



PARKER Ø 2,5
632019

OLAB Ø 2
401893 V220/50
401894 V110/60





M & M Ø 1,5
700253/22 V220/50/60
700253/11 V110/60
700253/24 V24/50/60



M & M Ø 1,5
619139/22 V220/50/60
619139/11 V110/60

ELETTROVALVOLE

PARTI MECCANICHE 3 VIE TENUTA RUBINO - 3 WAYS SOLENOID VALVES BODY RUBY SEAL

FLAT

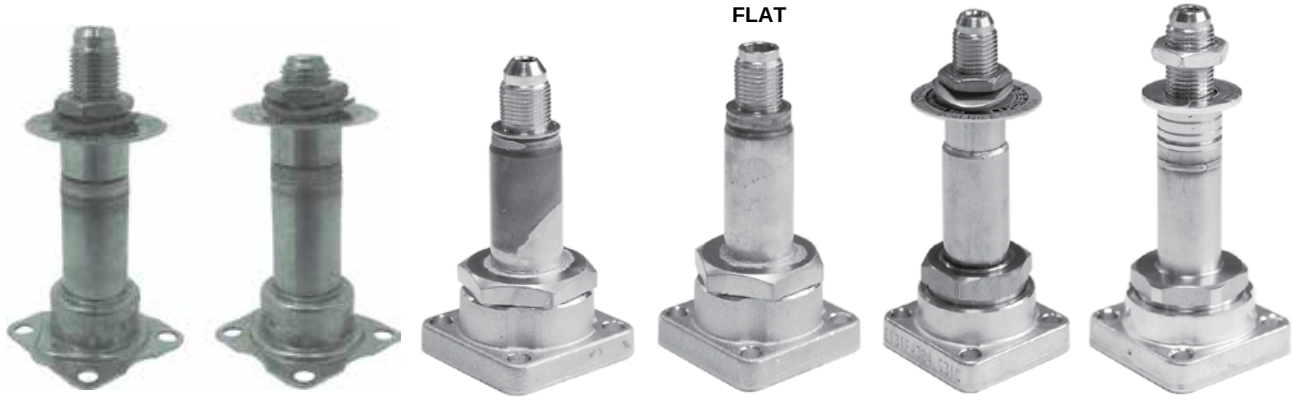

PARKER S.S. 0-14bar **700173**

PARKER S.S. 0-12bar **632016**

PARKER 0-10bar **700177**

PARKER 0-10bar **700158**

LUCIFER 0-10bar **700176**

ODE 0-15bar **300305**



PARKER

700179/22 V220/50/60
700179/11 V110/60
700156 V24/50/60
591753 V24 DC



O D E

300015 V220/50/60
300015/11 V110/60
300015/24 V24/50/60

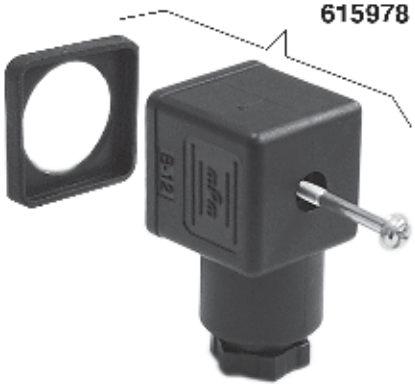



LUCIFER

700181/22 V220/50/60
700181/11 V110/60
700181/24 V24/50/60

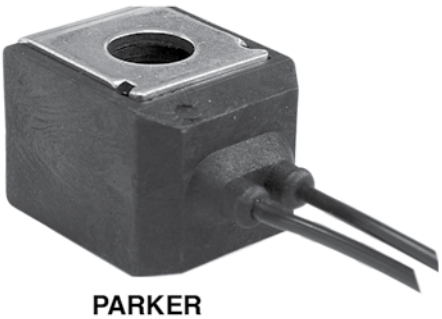

PARKER

700189/22 V220/50/60
700189/11 V110/60





OLAB

401895 V220/50/60
401896 V110/60



M & M

700648/22 V220/50/60
700648/11 V110/60
700648/24 V24/50/60

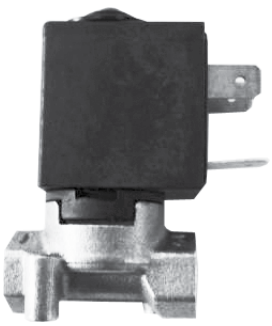

601602 V230/50

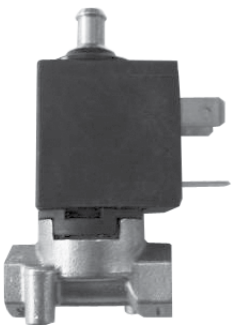

601603 V220/50

MACINACAFFE'

ANFIM MODEL: HAUS

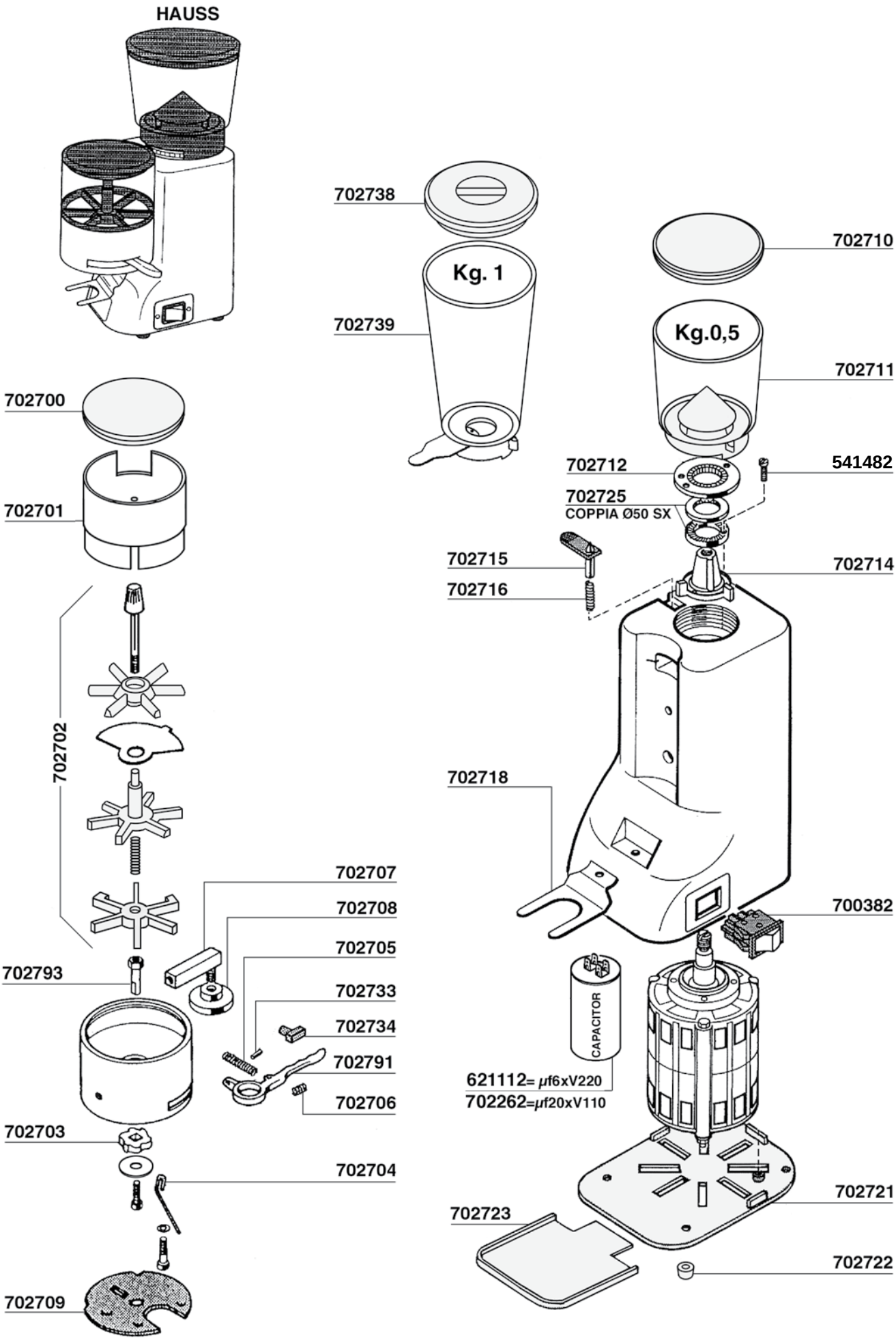

MACINACAFFE'

ANFIM MODEL: HAUS SELF

HAUSS-SELF

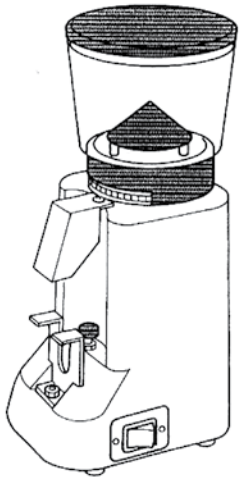

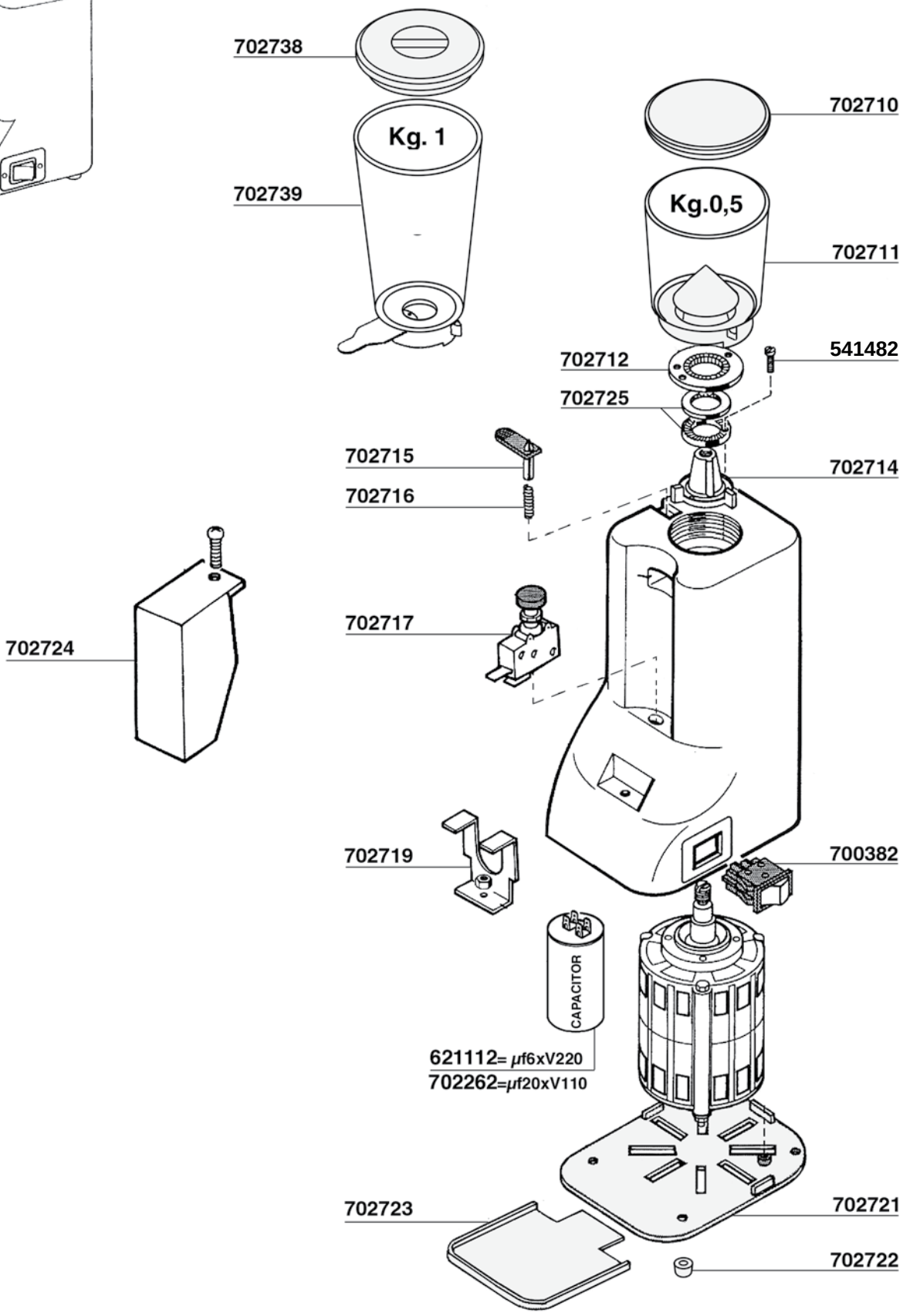

MACINACAFFE'

ANFIM MODEL: BEST

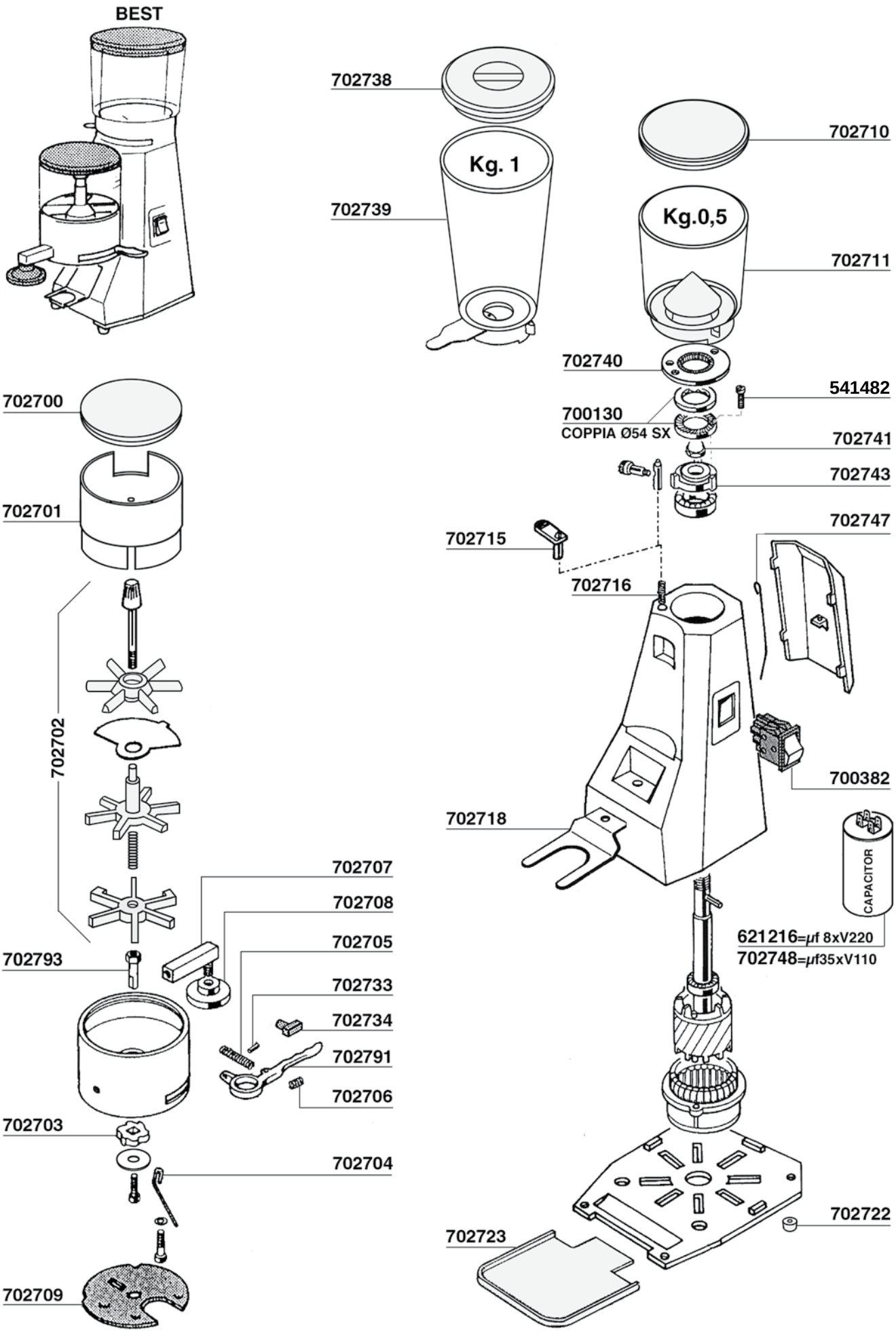

MACINACAFFE'

ANFIM MODEL: SUPER BEST

SUPERBEST

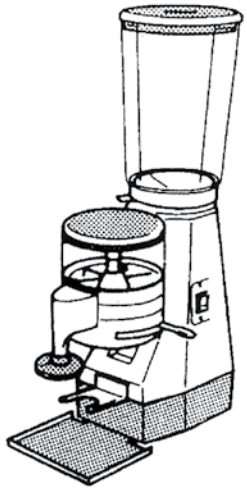

MACINACAFFE'

ANFIM MODEL: LUSSO

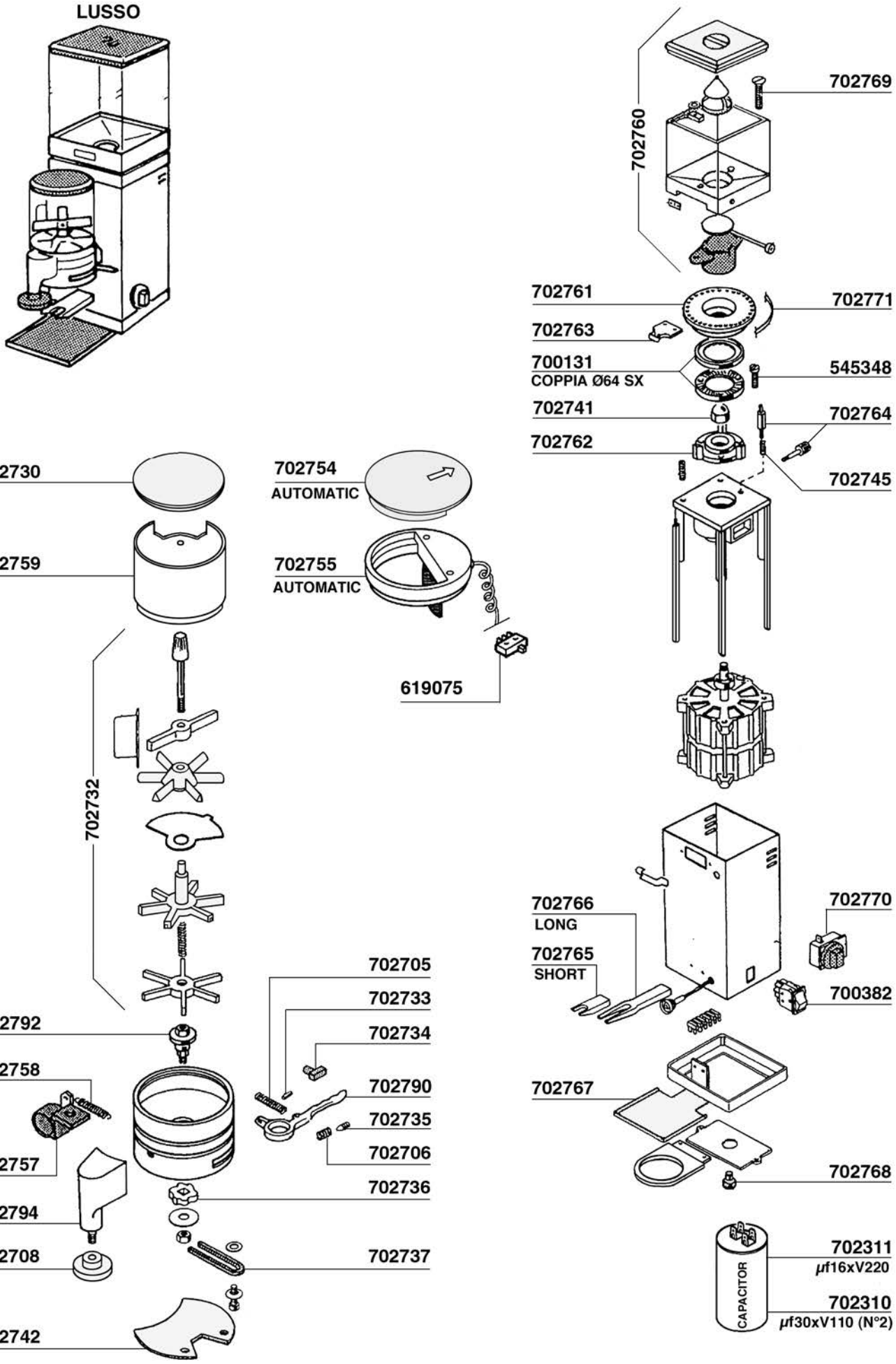

MACINACAFFE'

ANFIM MODEL: SUPER LUSSO

SUPERLUSSO

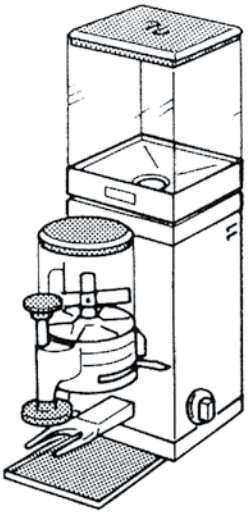

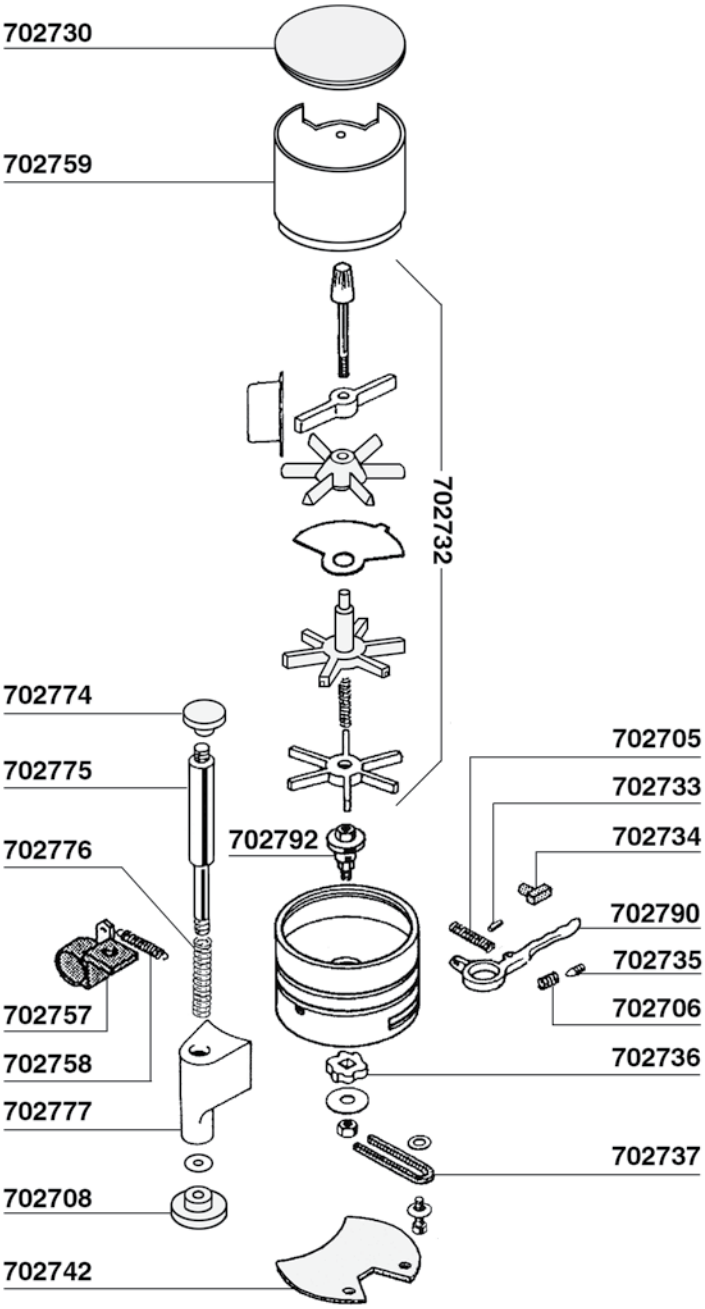

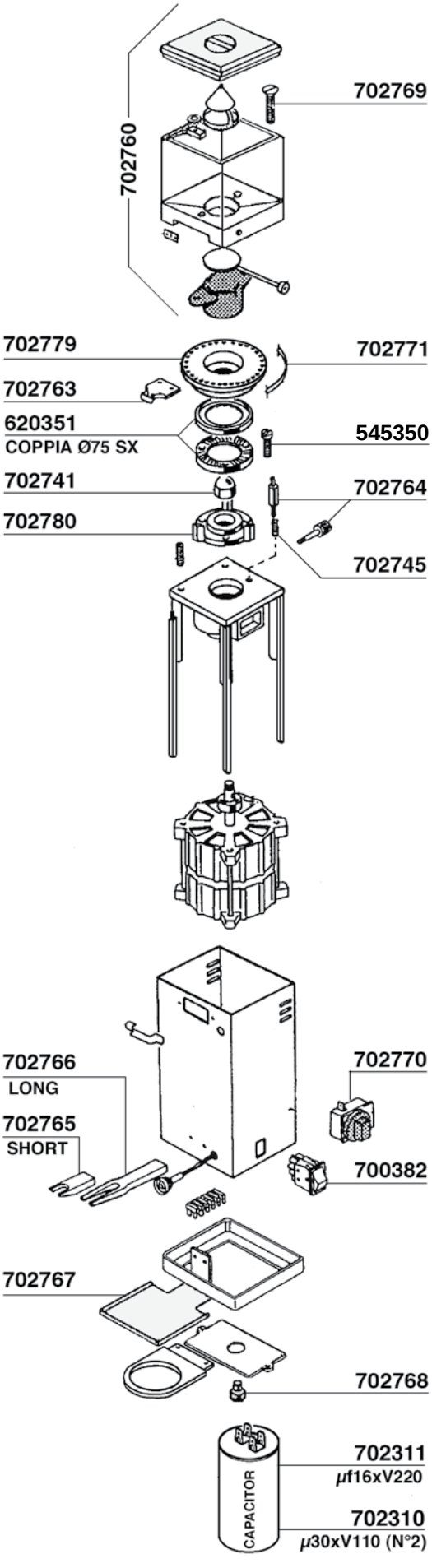

MACINACAFFE

ANFIM MODEL: CAIMANO

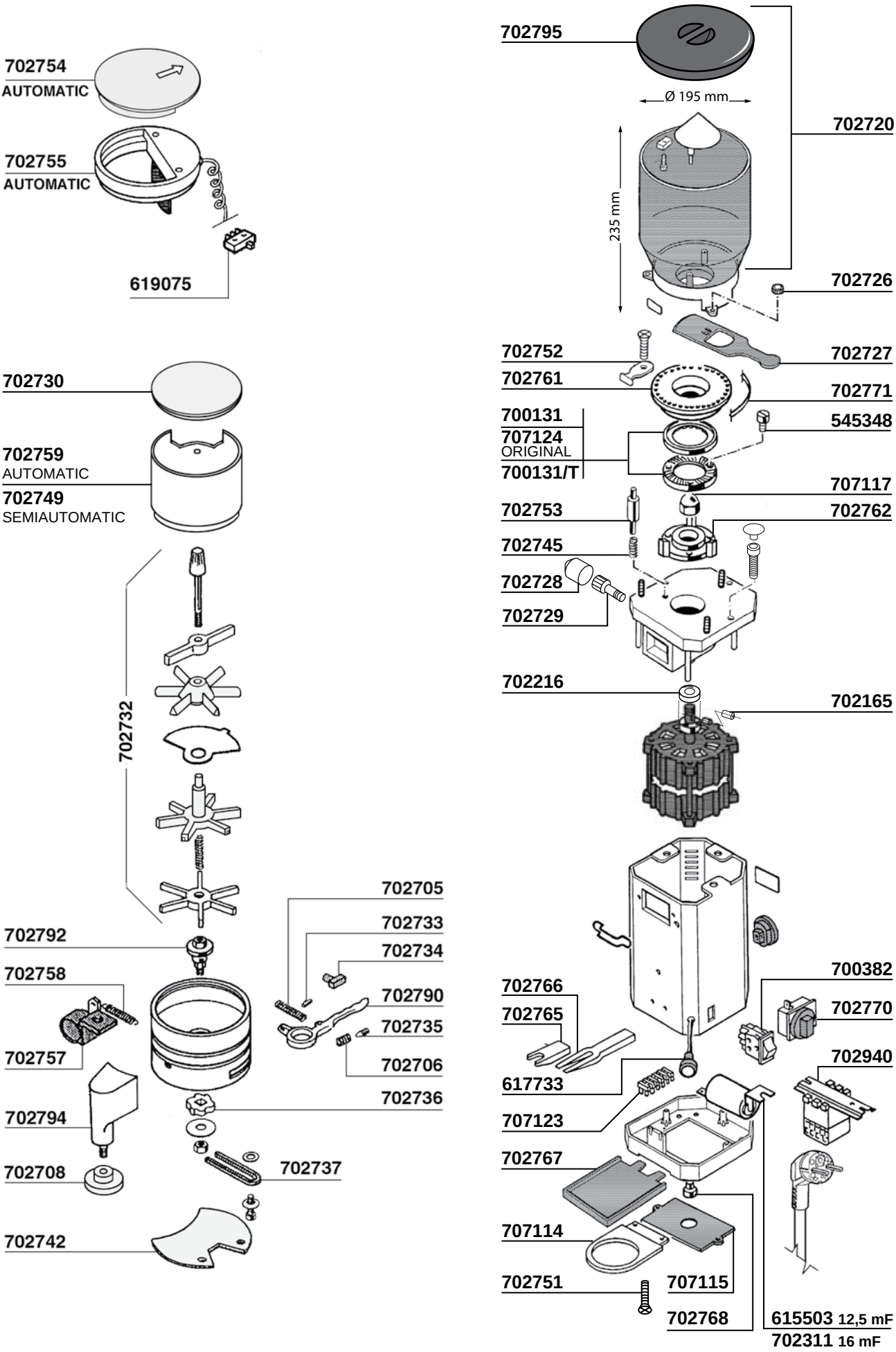

MACINACAFFE

ANFIM MODEL: SUPER CAIMANO

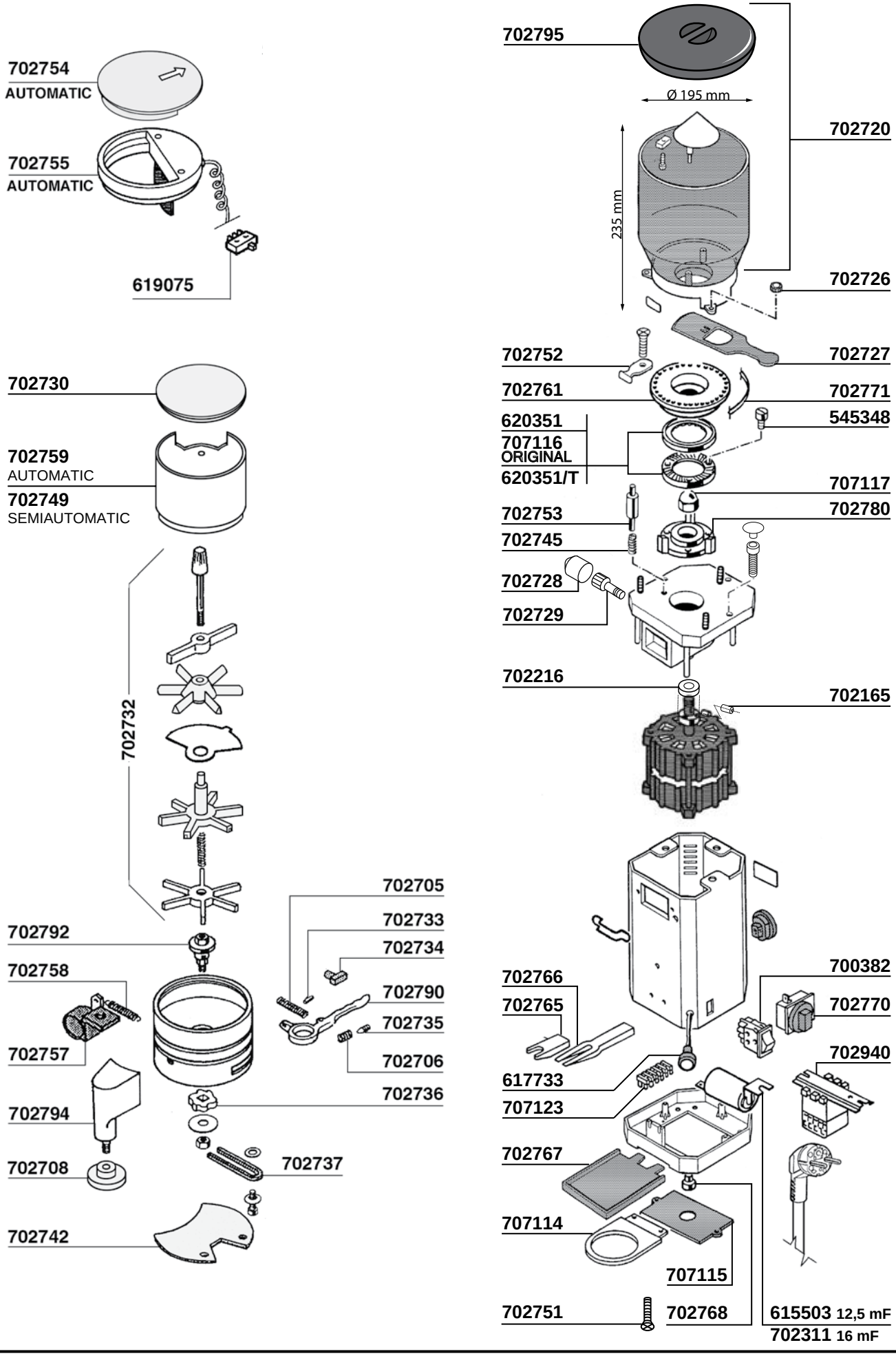

MACINACAFFE

ANFIM MODEL: SCODY-II

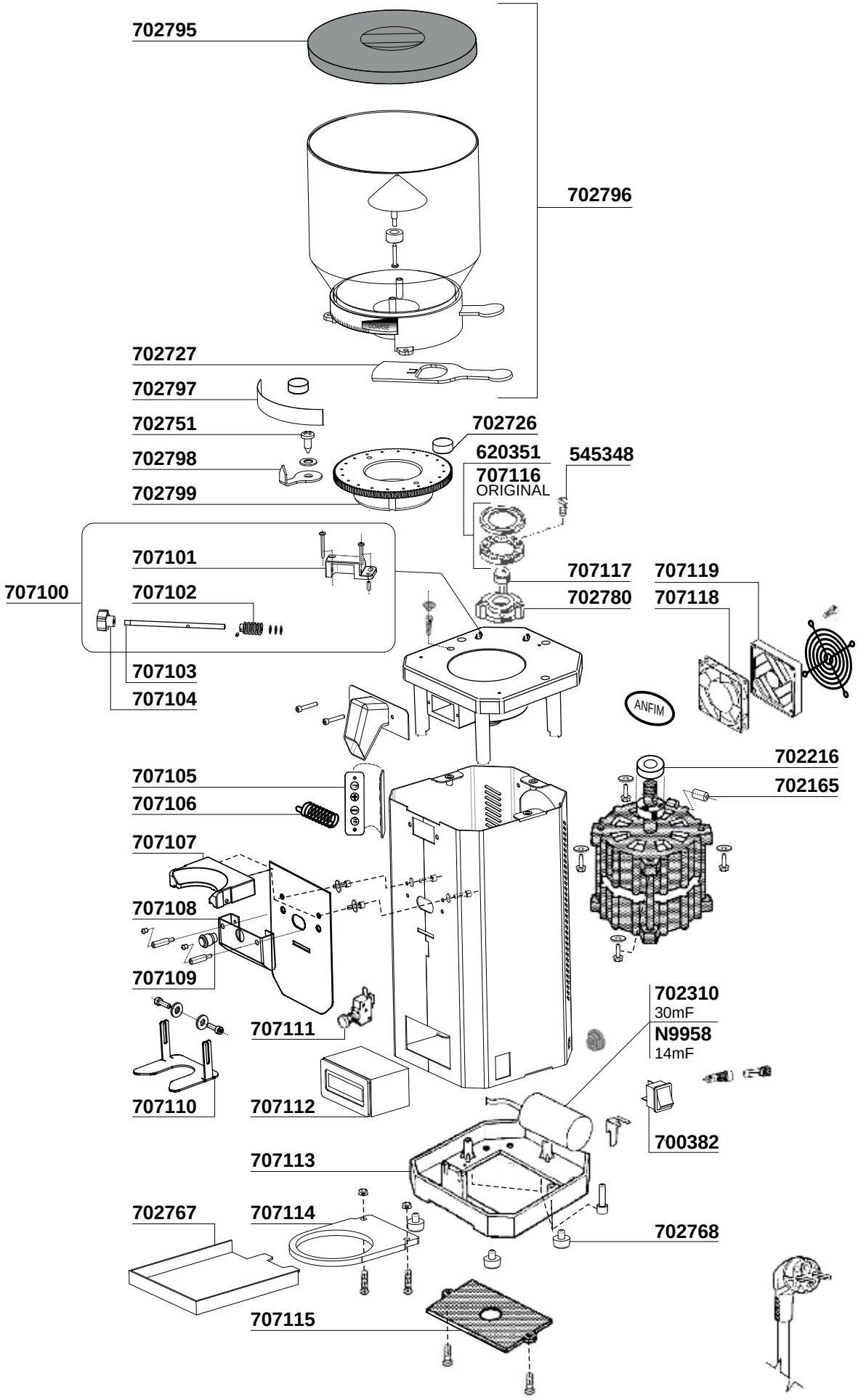

MACINACAFFE

ANFIM MODEL: SP-II

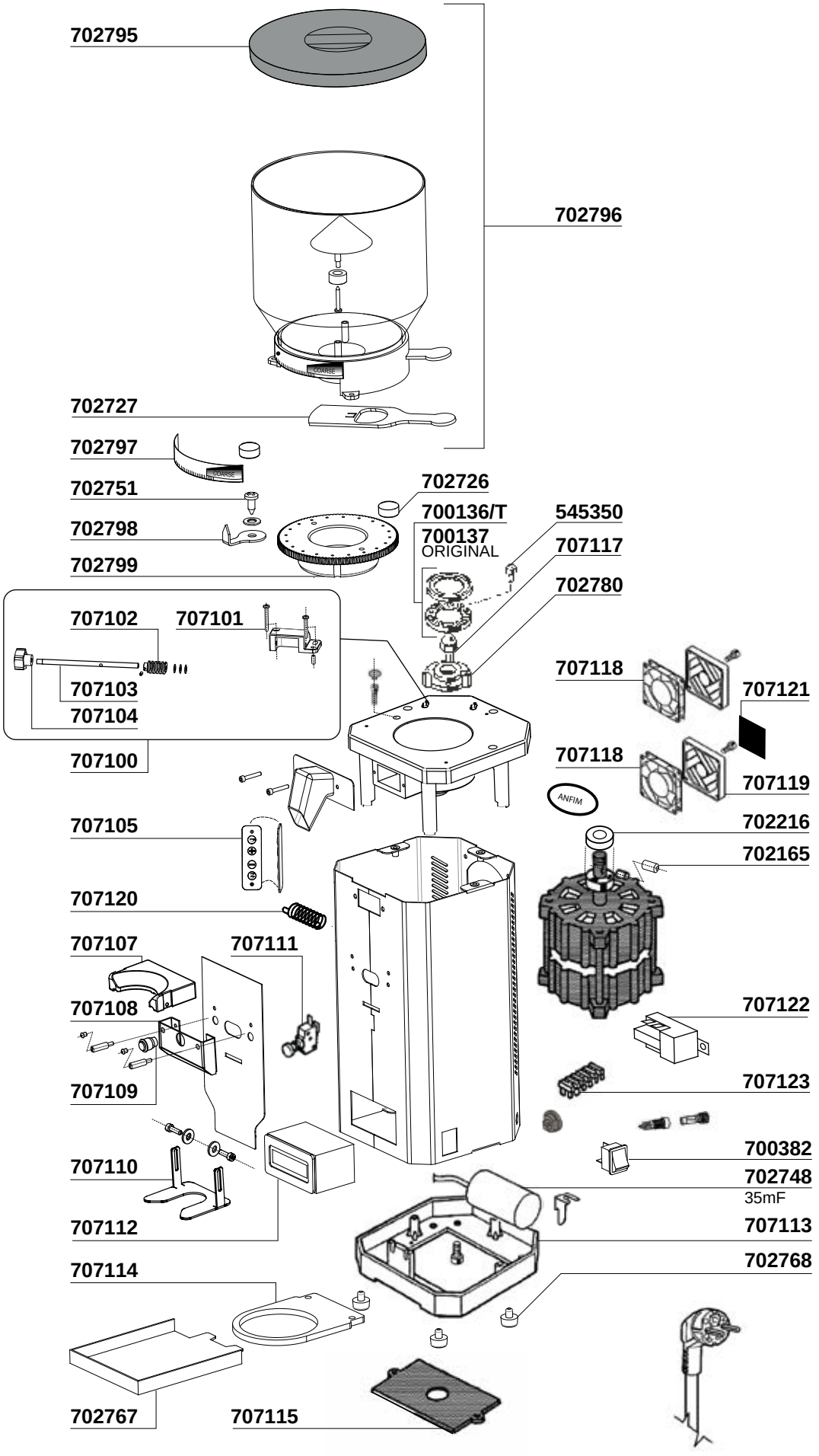

MACINACAFFE'

Tav.11

BNZ: MD64 - MD74

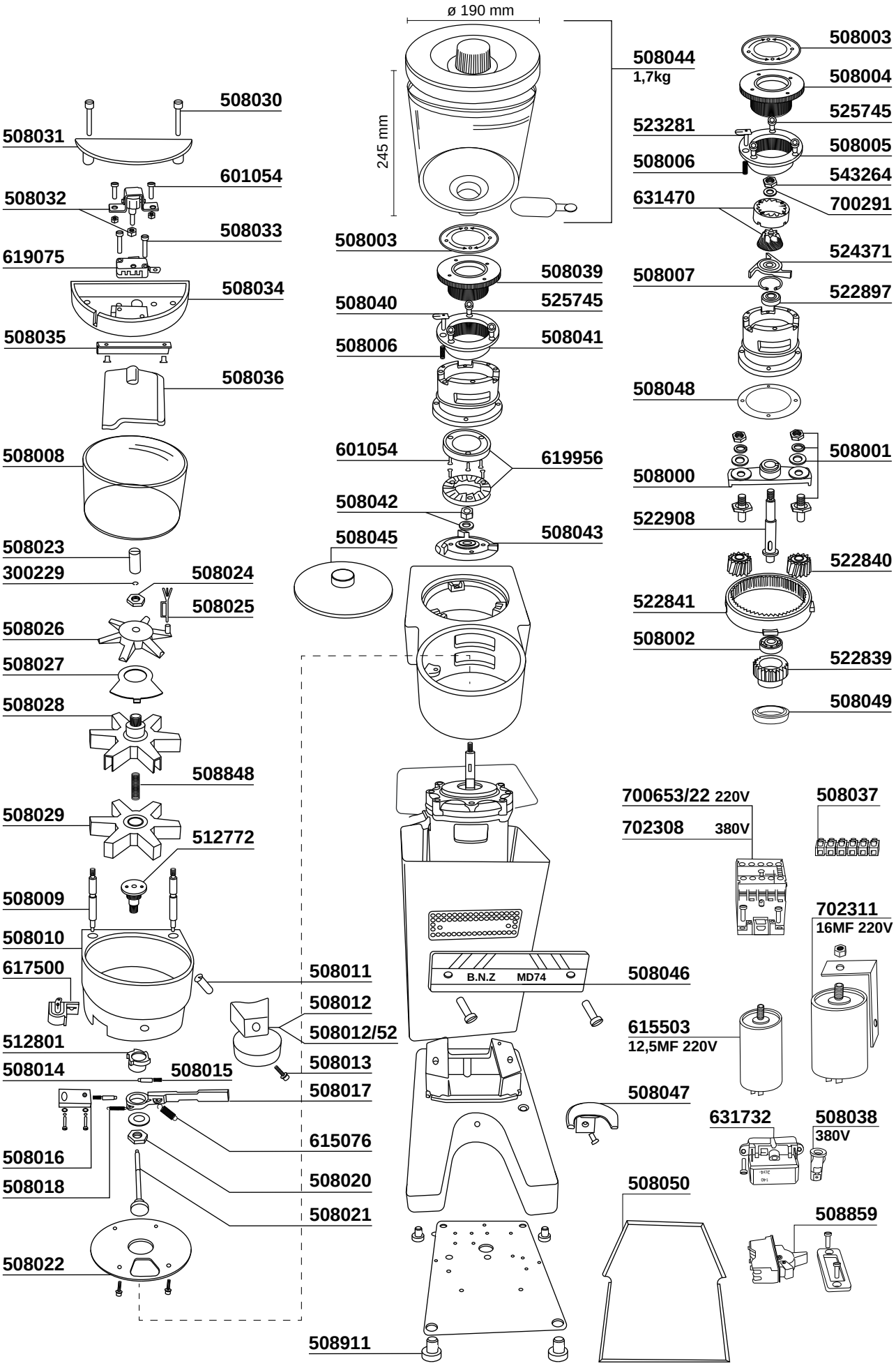

COMPAK

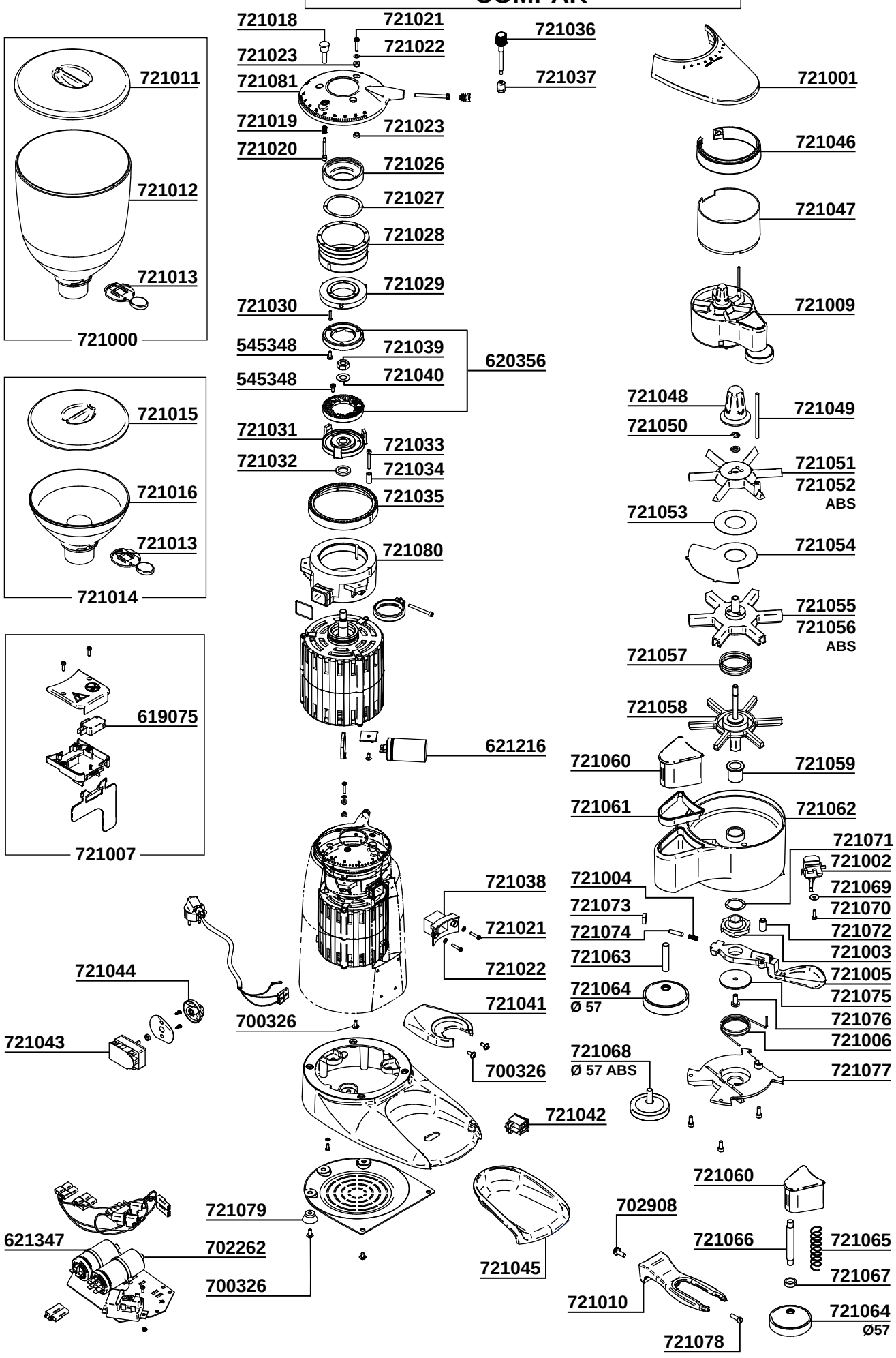
721018
721021
721036
721023
721022
721081
721037
721001
721011
721019
721023
721020
721026
721046
721012
721027
721047
721028
721013
721029
721009
721030
721000
545348
721039
620356
545348
721040
721048
721049
721015
721050
721031
721033
721032
721034
721051
721052
ABS
721016
721035
721053
721013
721080
721054
721014
721055
721056
ABS
721057
619075
721058
621216
721060
721059
721061
721062
721007
721071
721002
721038
721004
721069
721073
721070
721021
721074
721072
721063
721003
721022
721005
721044
721064
Ø 57
721075
721041
700326
721076
721043
721006
721068
Ø 57 ABS
700326
721077
721042
721060
721079
702908
621347
702262
721066
721065
721045
721067
700326
721010
721064
Ø57
721078

EUREKA MODEL MDM - MDMCA - MDME - MDMEA

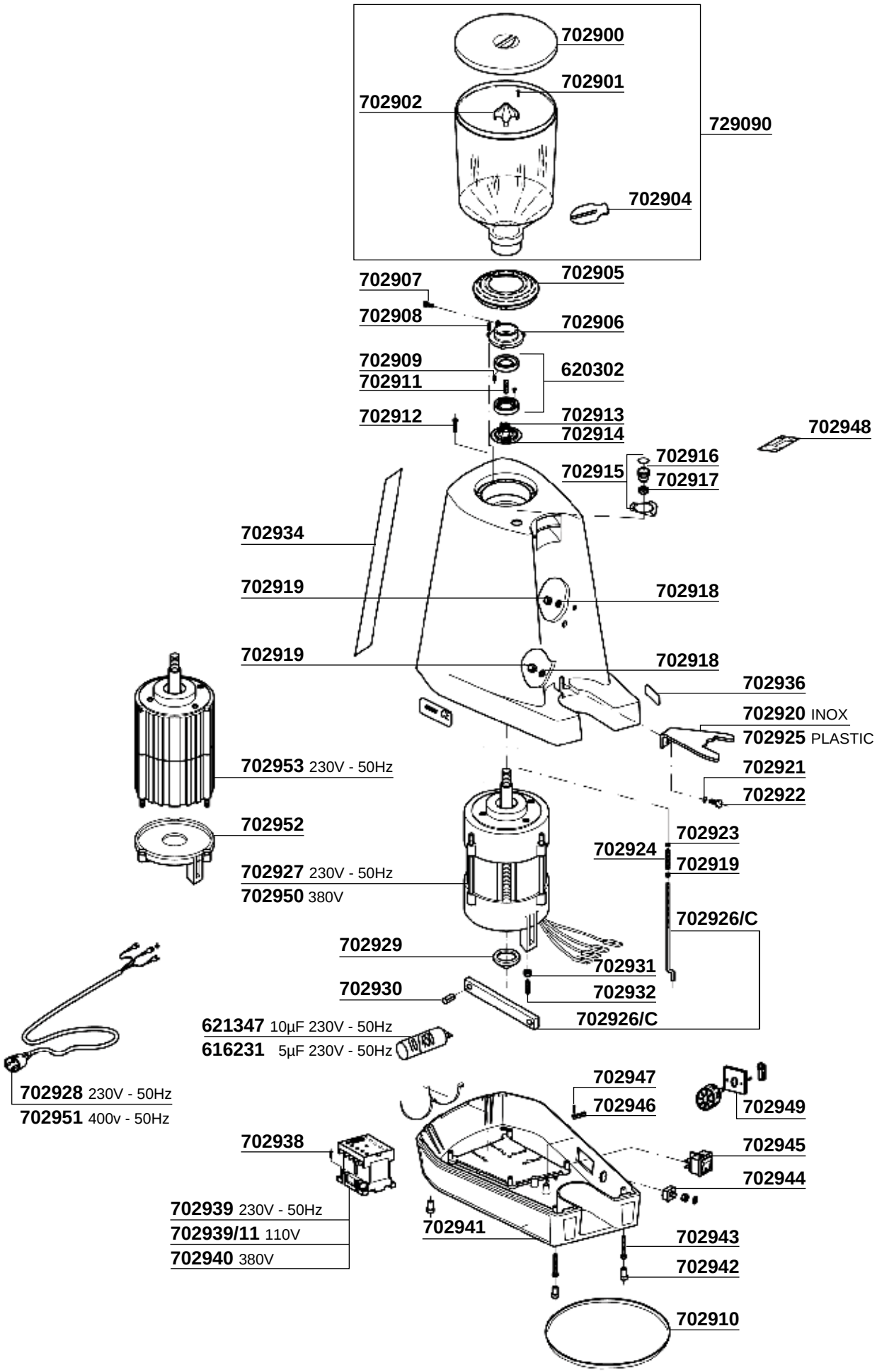

EUREKA MODEL: MDM - MDMCA - MDME - MDMEA

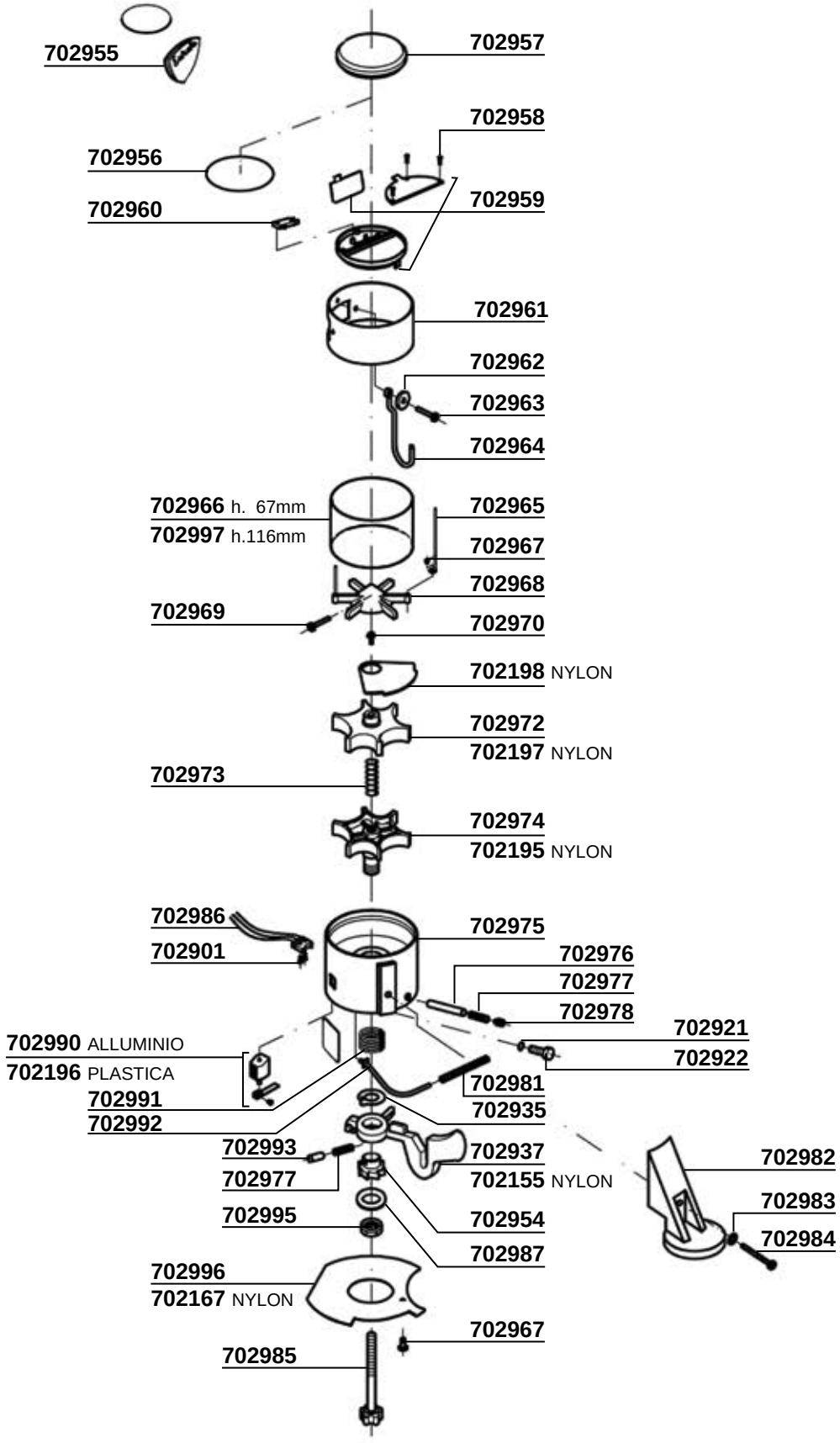

EUREKA MODEL MCF

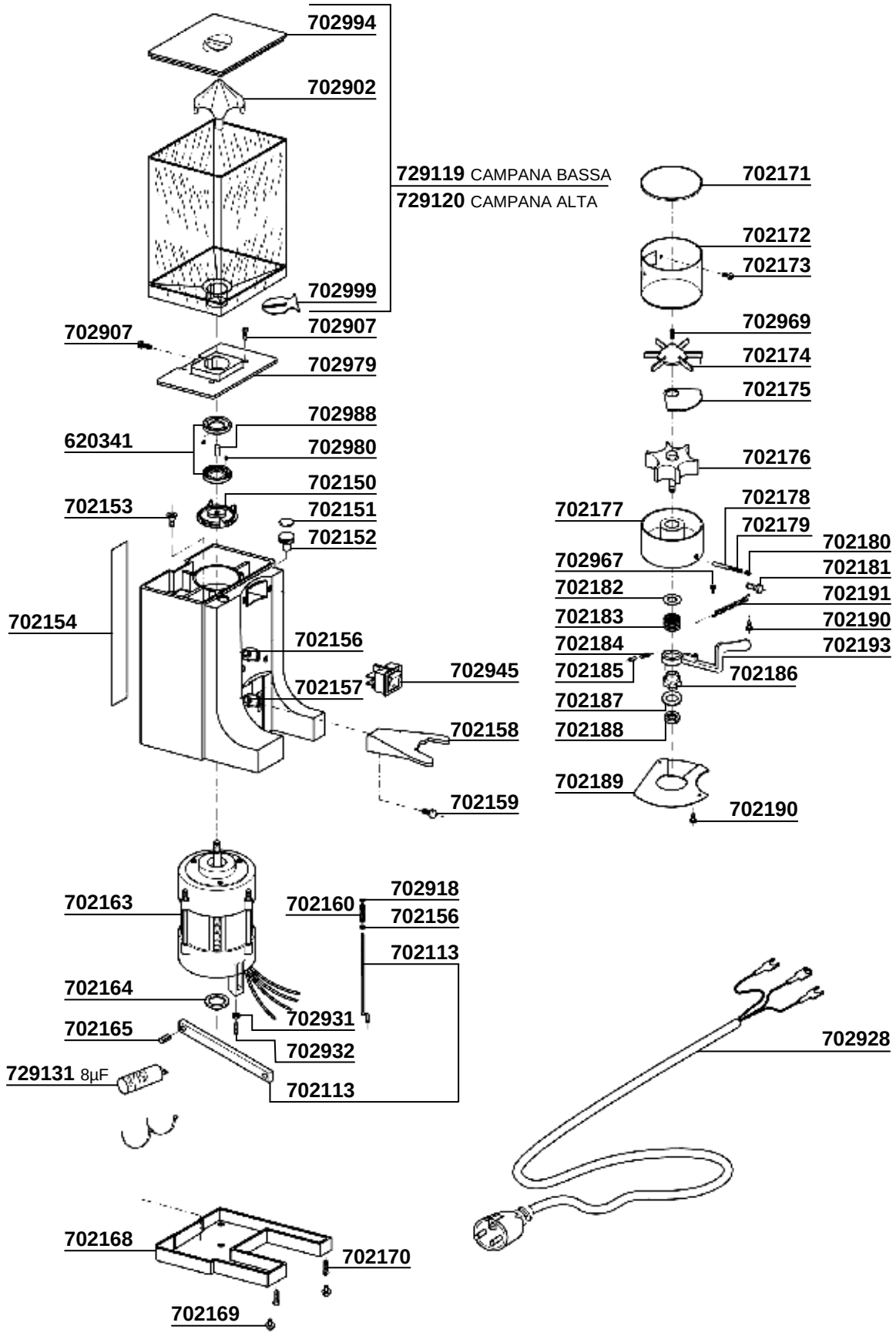

MACINACAFFE' Tav.16

EUREKA MODEL: MYTHOS

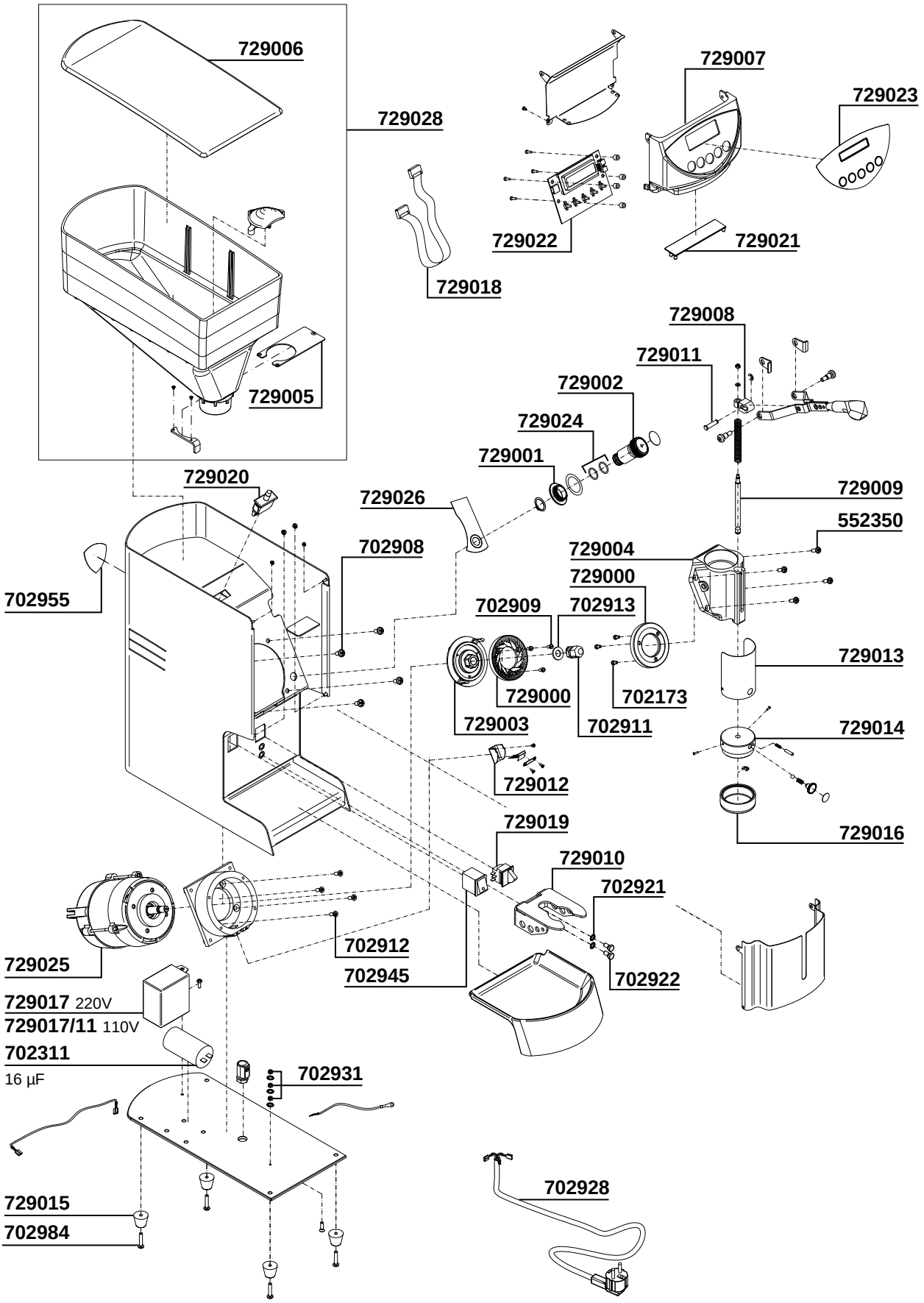

MACINACAFFE'

EUREKA MODEL: OLYMPUS

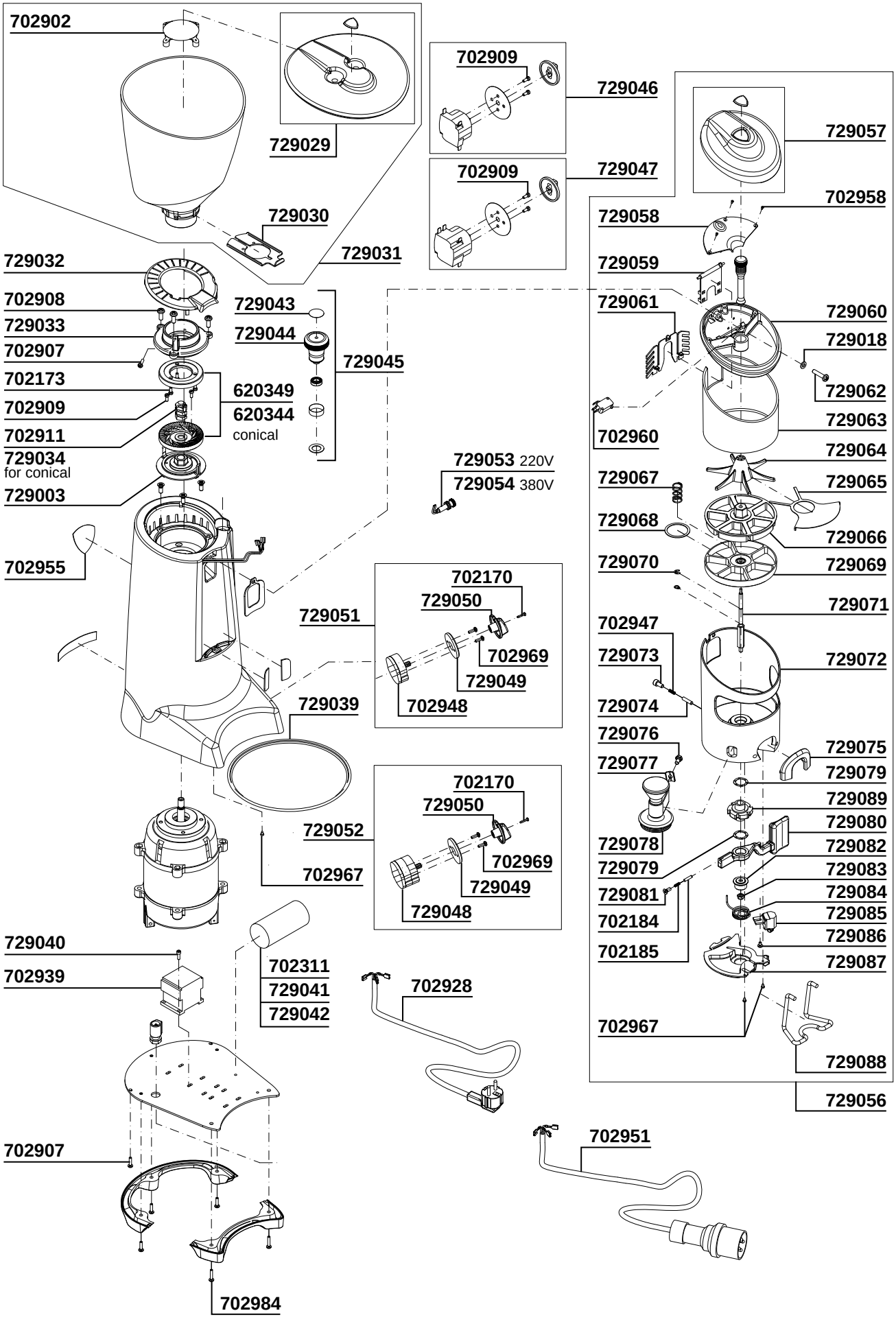

MACINACAFFE’ Tav.18

EUREKA MODEL: FASHION

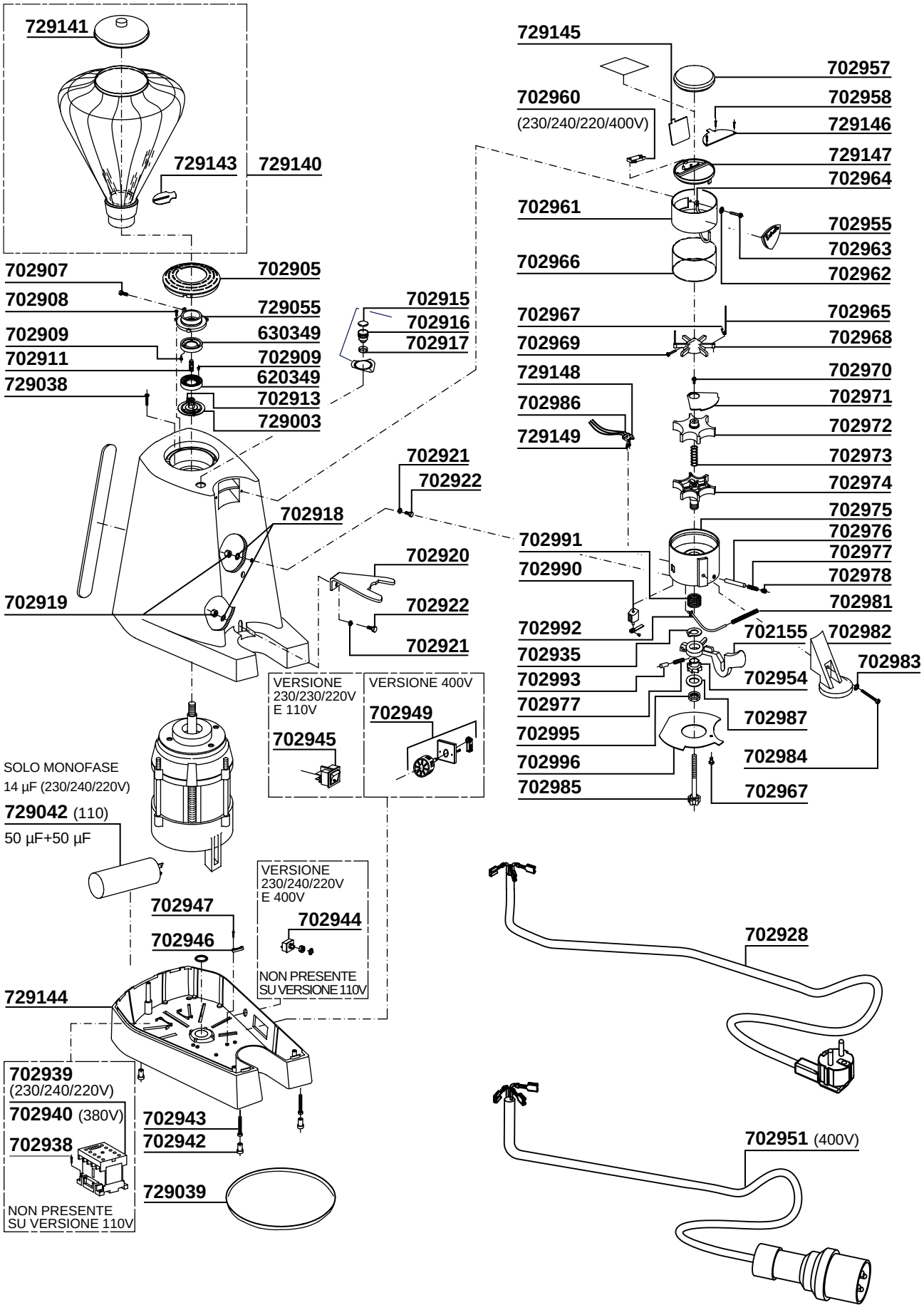

EUREKA MODEL: MIGNON ISTANTANEO

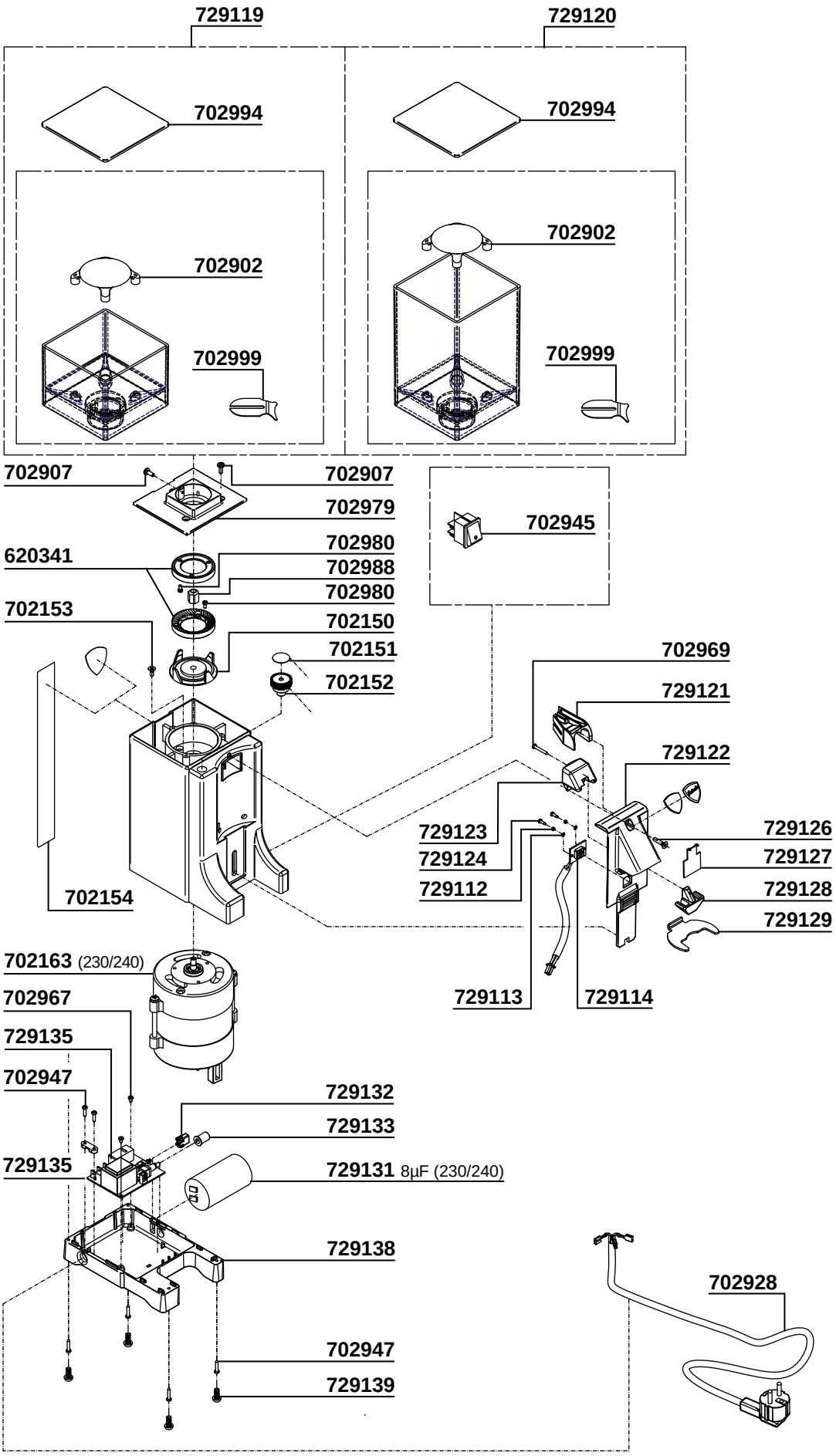

MACINACAFFE'

EUREKA MODEL: ZENITH

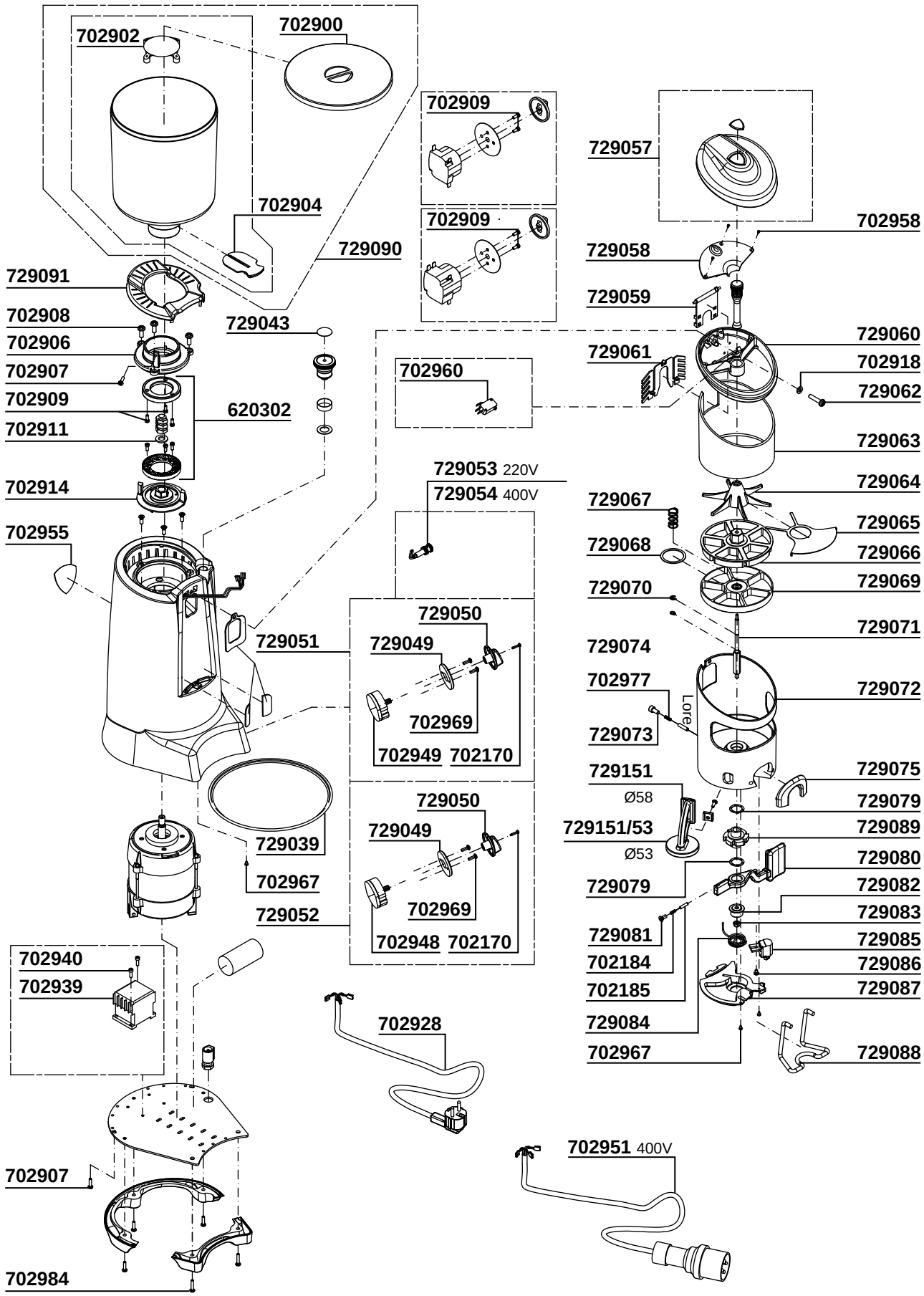

MACINACAFFE’ Tav. 21

EUREKA MODEL: ZENITH ELETTRONICO

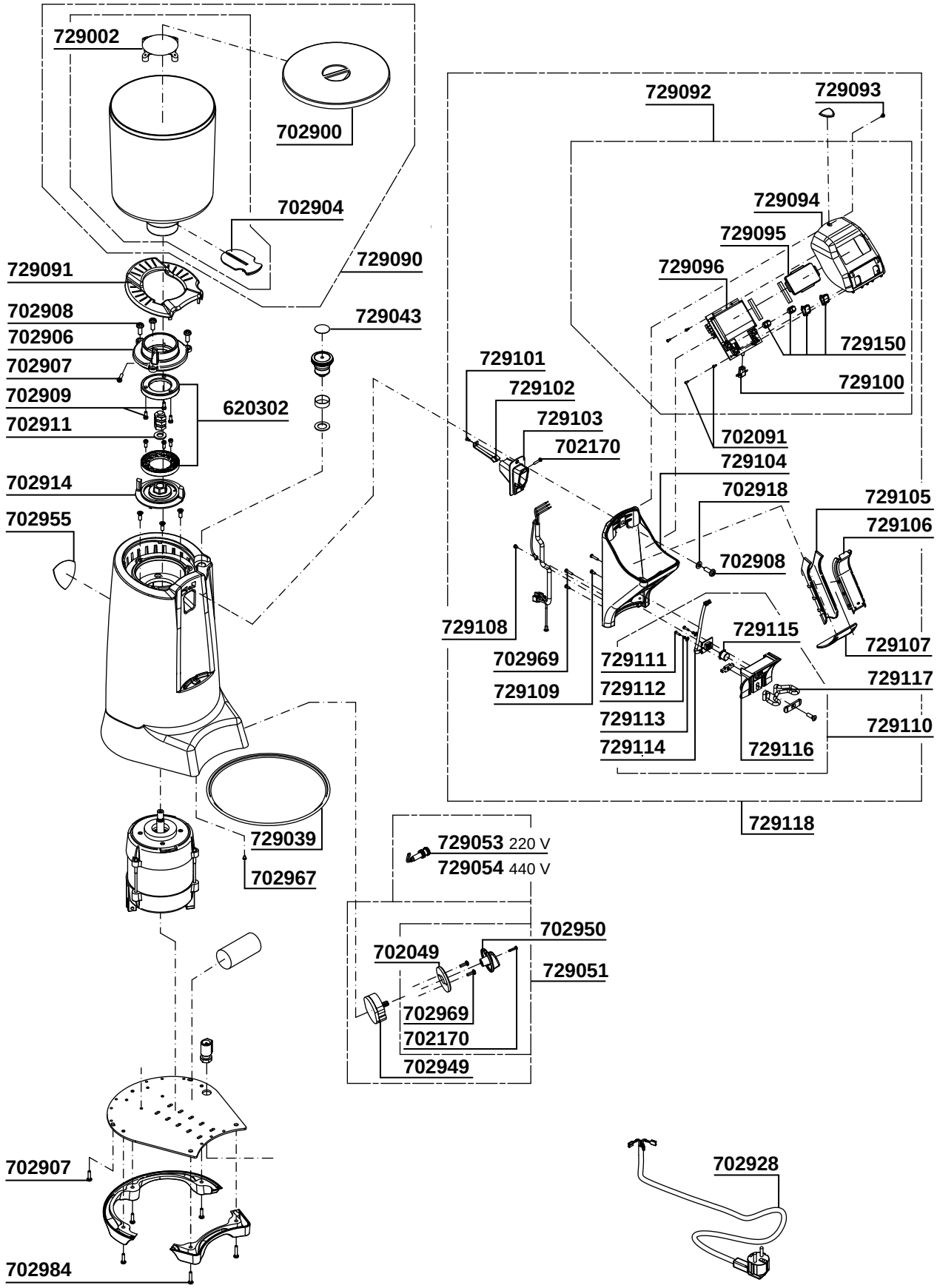

MACINACAFFE'

PARTI COMPATIBILI FAEMA

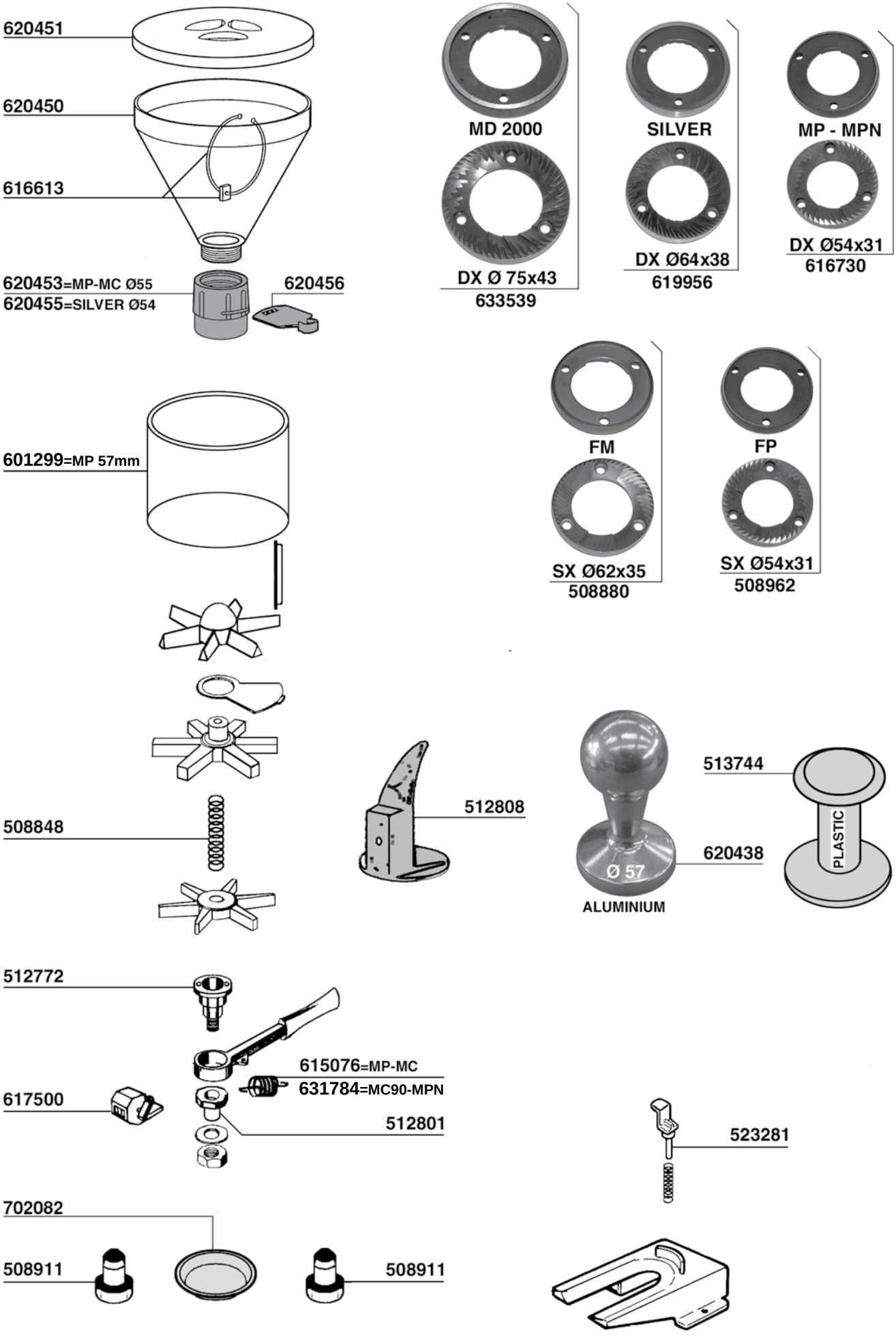

PARTI COMPATIBILI FAEMA

374

MC

543264

700291

631470

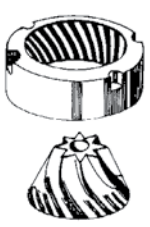

524371



522897

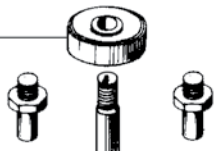

522908



522872



522840



522840



522839



522841

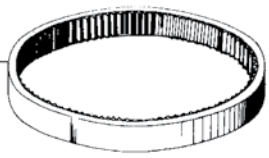



702307=V220
702308=V380
702309=V110

619075

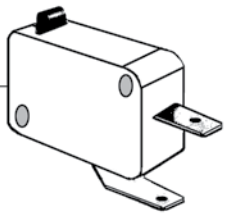



619957

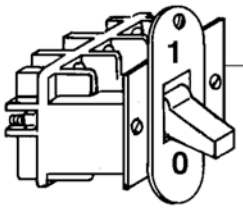

508859

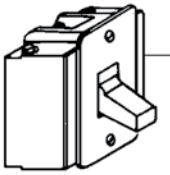

616409

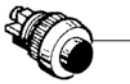

513052



513051

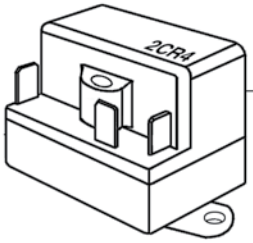

631732
V220

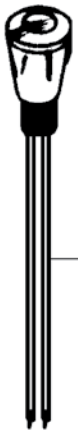

615511/22



617729/22

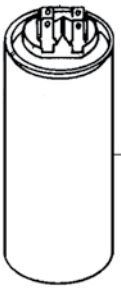

615503=12,5mF
621347=10mF
621216=8mF
616231=5mF

MACINACAFFE'

FIORENZATO MC MODEL: F5 - F6

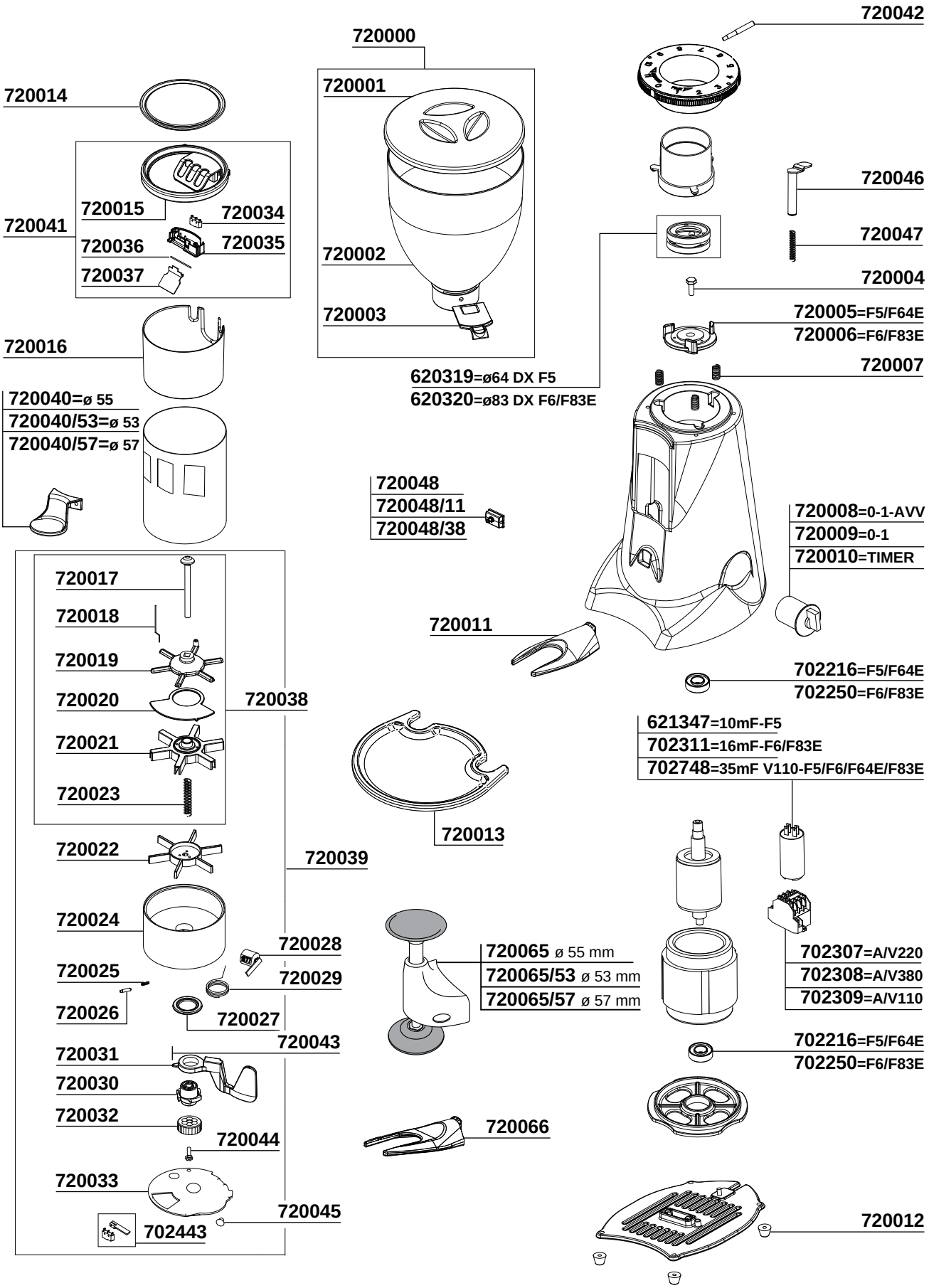

FIORENZATO MC MODEL: F64E - F64EVO - F83E

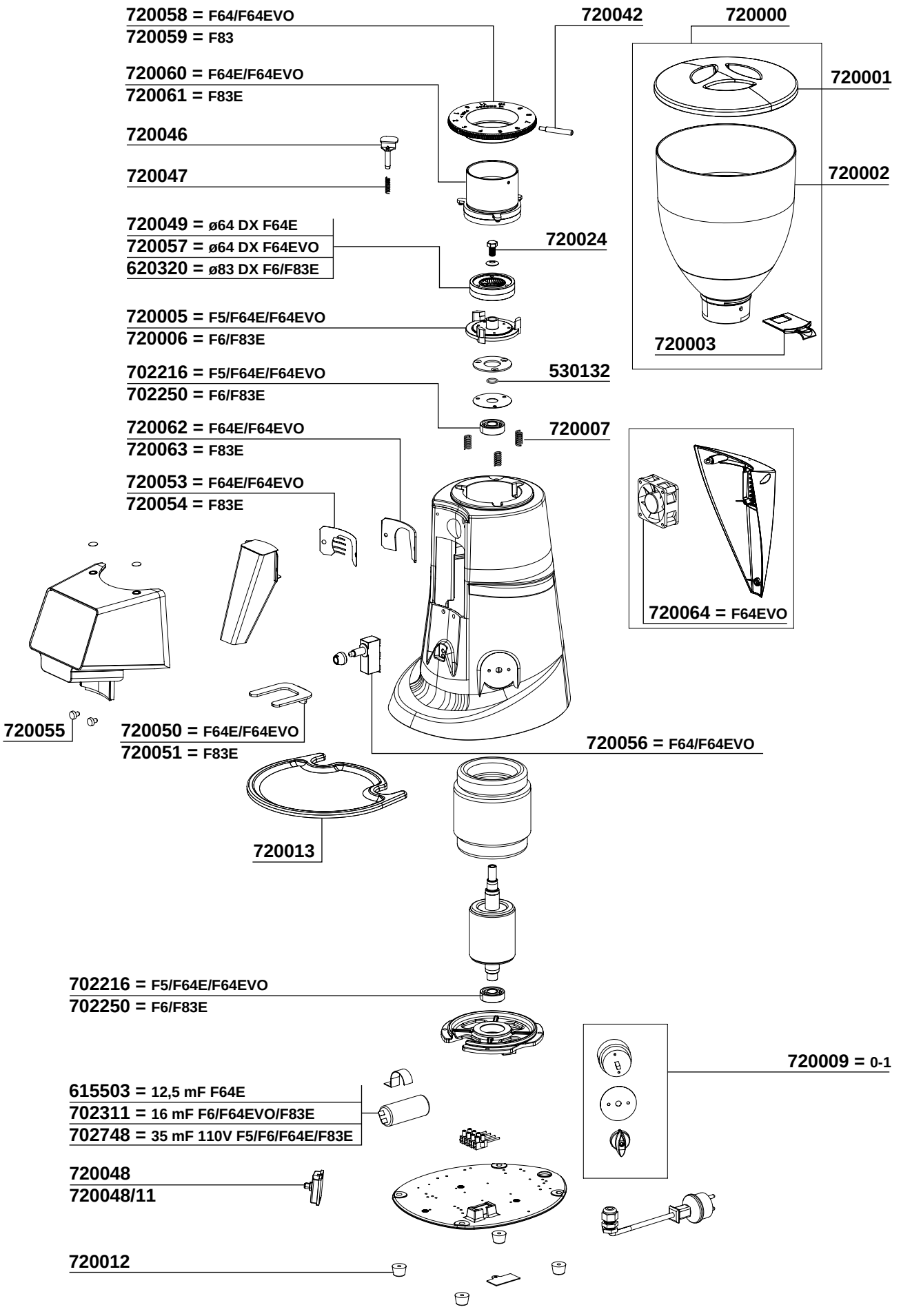

H5

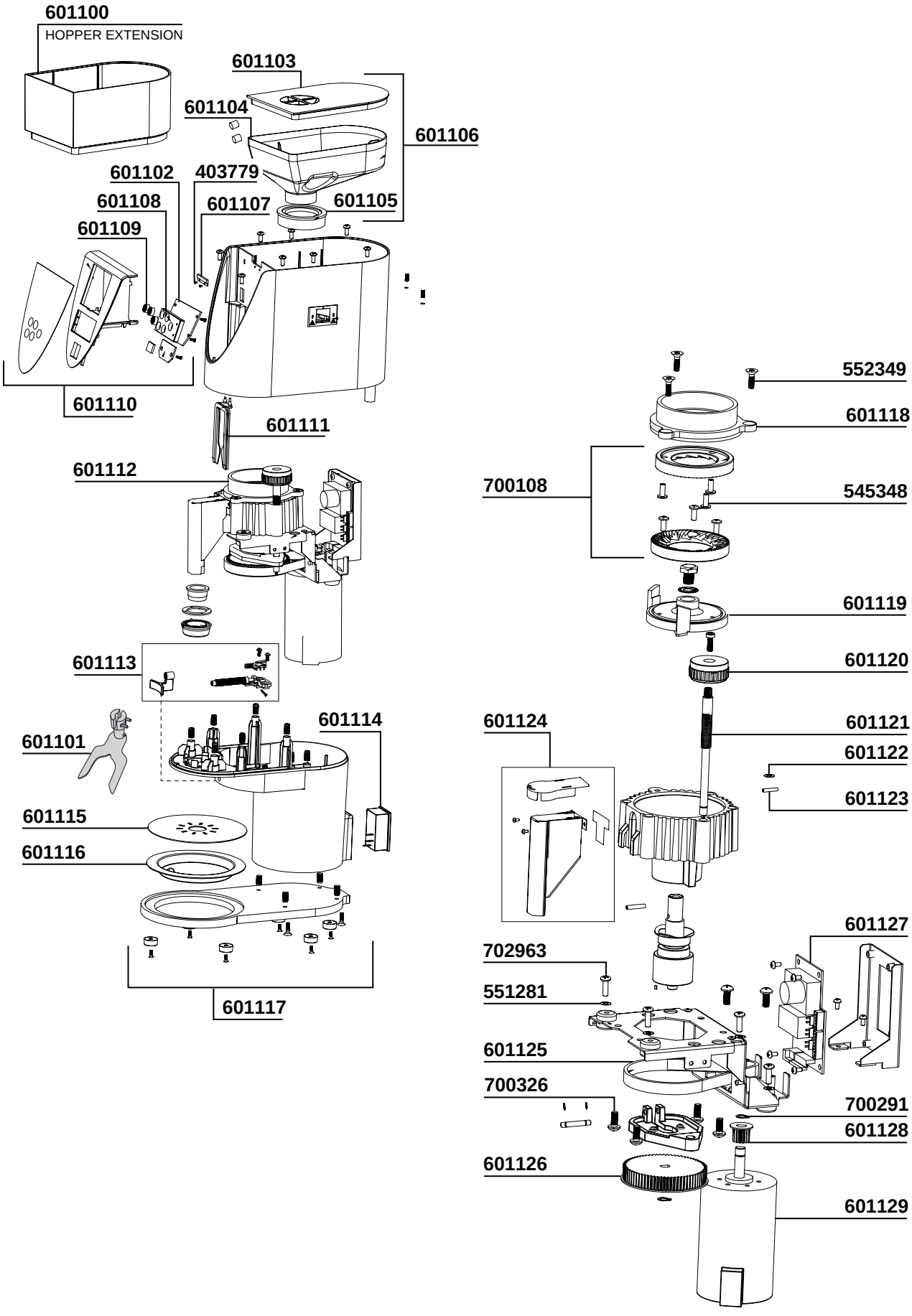
601100
HOPPER EXTENSION
601103
601104
601106
601102
403779
601108
601107
601105
601109
601110
601111
601112
601113
601114
601101
601115
601116
601117
552349
601118
700108
545348
601119
601120
601124
601121
601122
601123
601127
702963
551281
601125
700326
700291
601128
601126
601129

HC 600

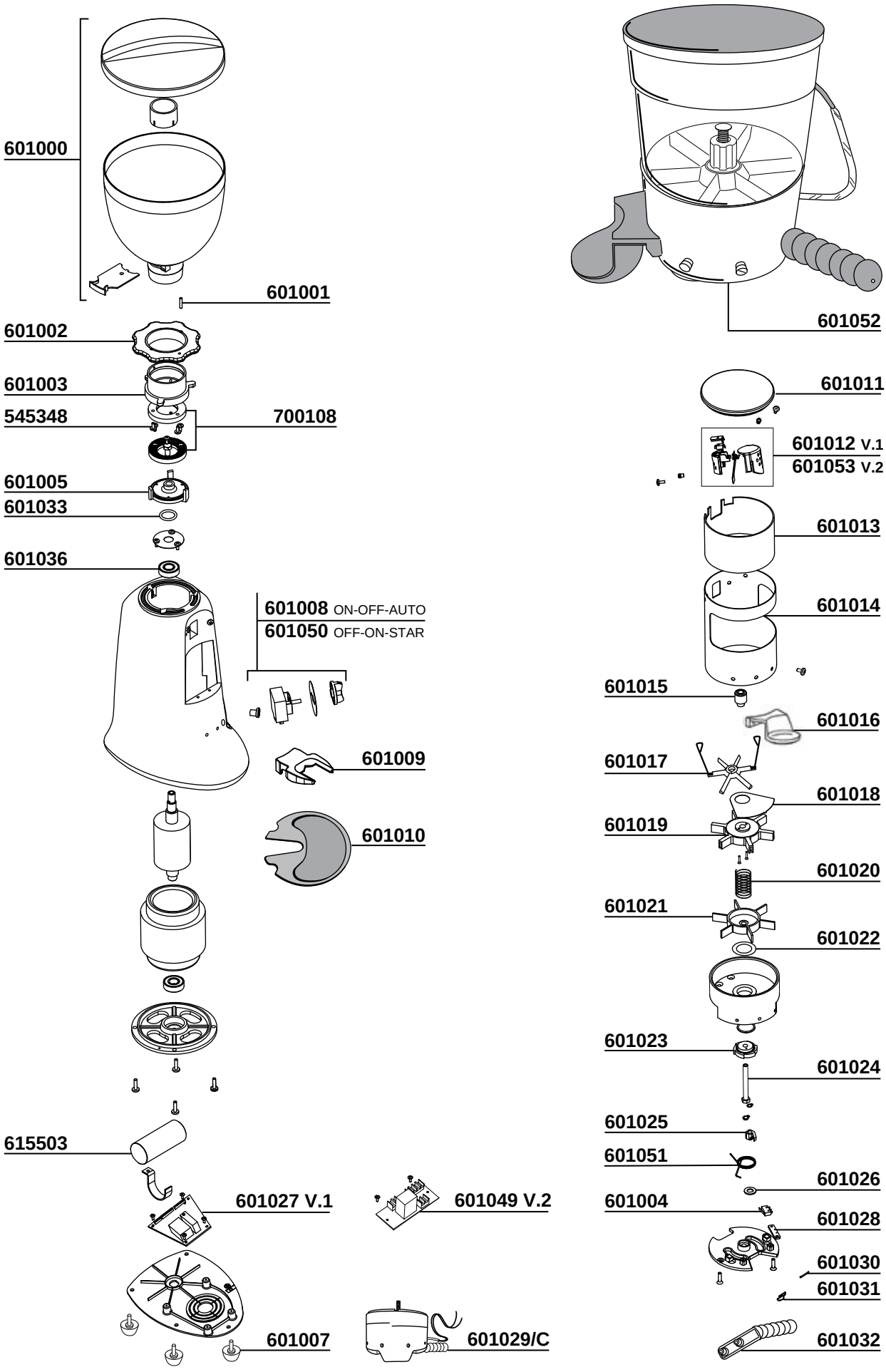
601000
601001
601002
601003
545348
700108
601005
601033
601036
601008 ON-OFF-AUTO
601050 OFF-ON-STAR
601009
601010
615503
601027 V.1
601007
601049 V.2
601029/C
601052
601011
601012 V.1
601053 V.2
601013
601014
601015
601016
601017
601018
601019
601020
601021
601022
601023
601024
601025
601051
601026
601004
601028
601030
601031
601032

HC 700

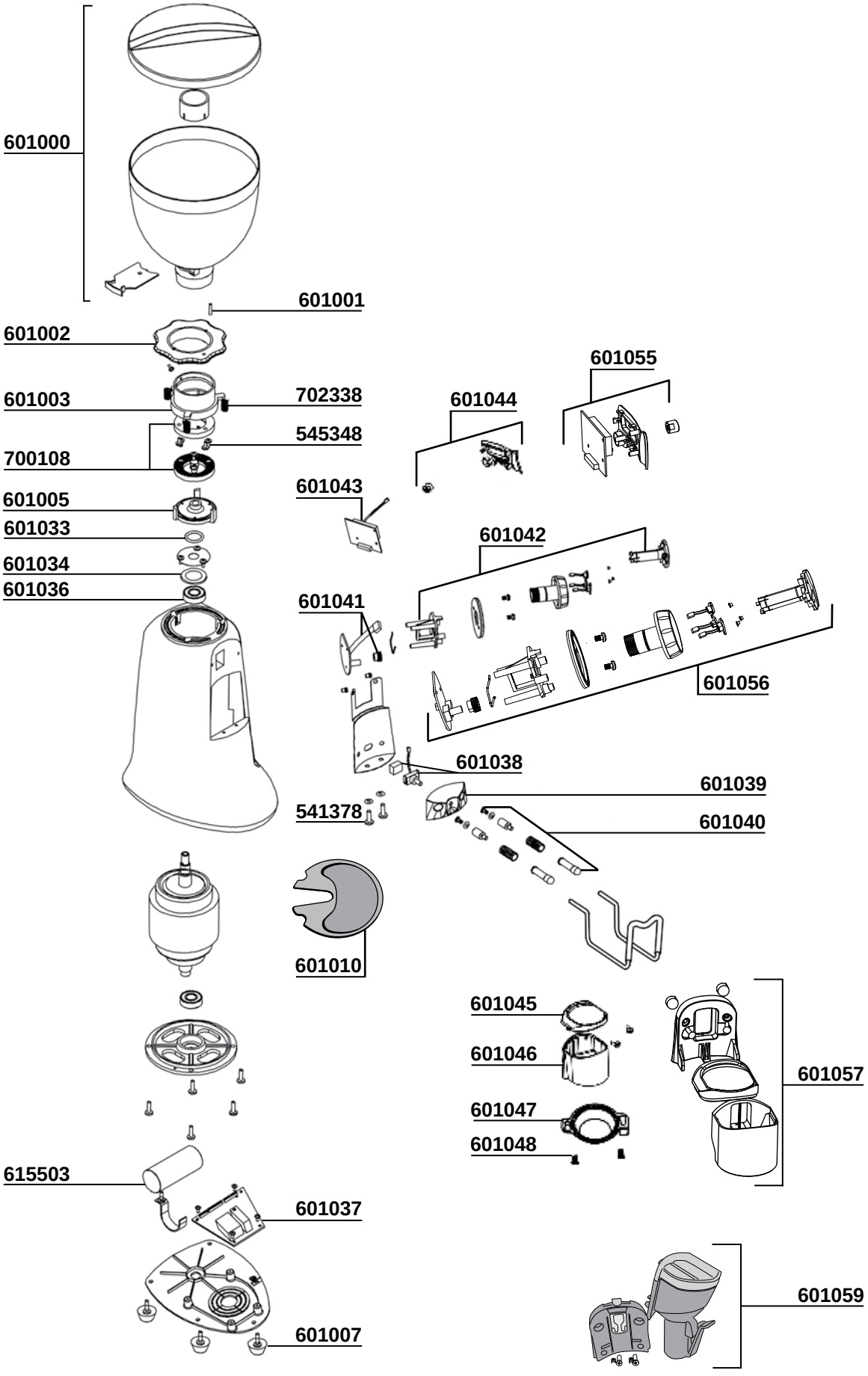
601000
601001
601002
601003
702338
545348
700108
601005
601033
601034
601036
601055
601044
601043
601042
601041
601056
601038
601039
541378
601040
601010
601045
601046
601047
601048
601057
615503
601037
601007
601059

MACINACAFFE'

MACAP MODEL MX - MXT - MXA - MXK

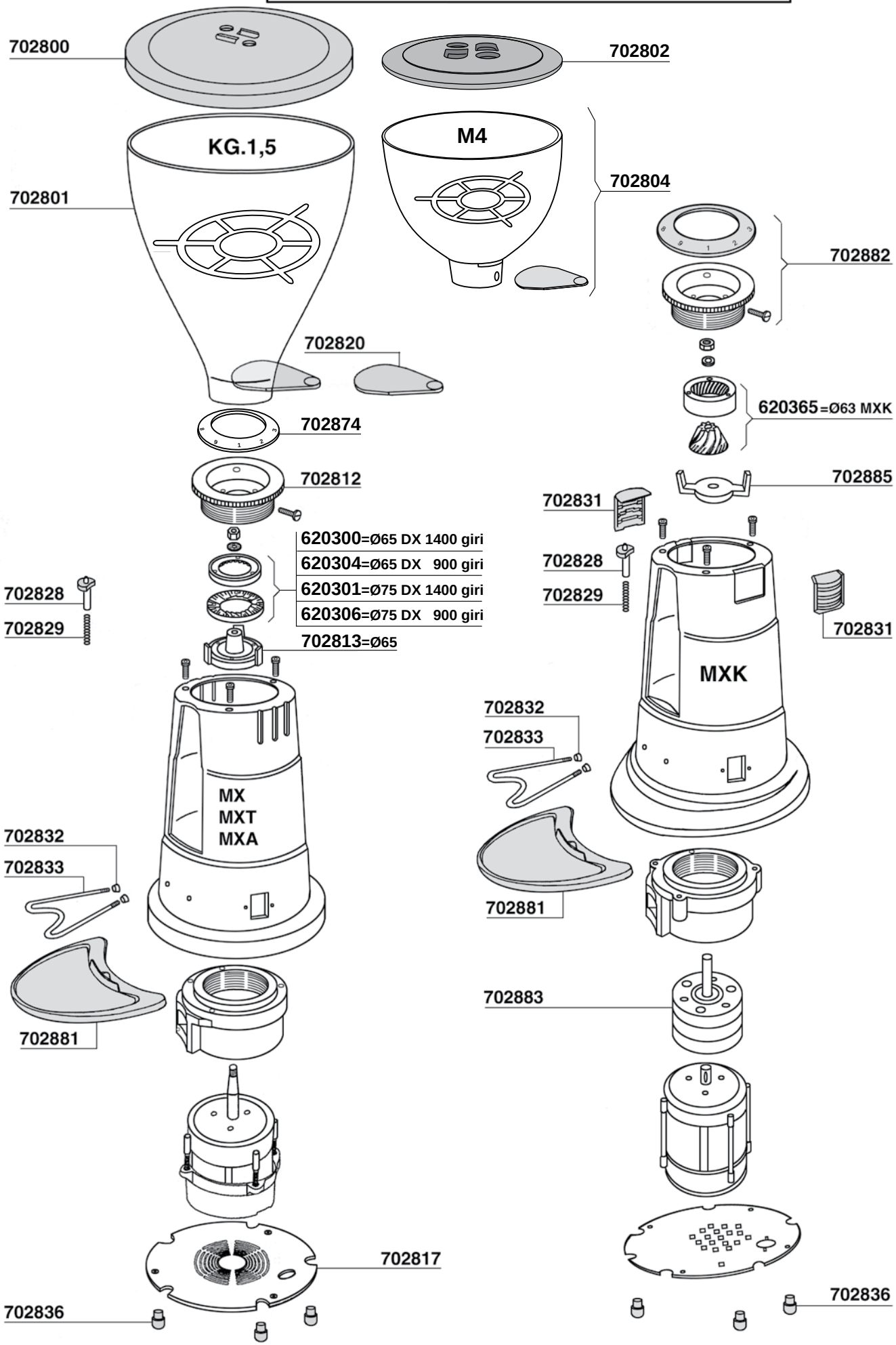

MACAP MODEL MX - MXT - MXA - MXK

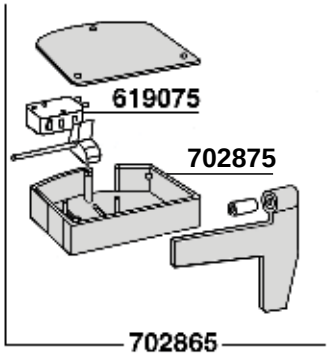

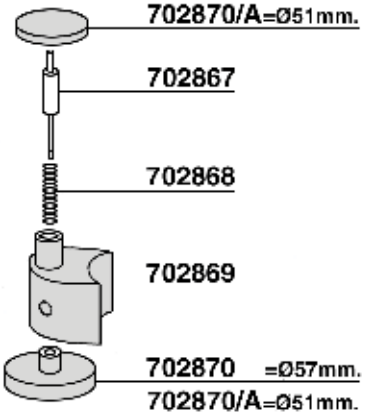

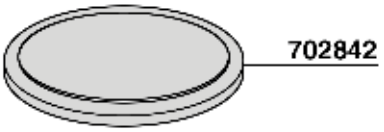

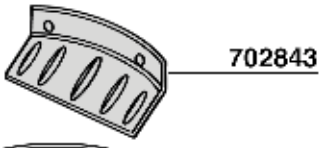

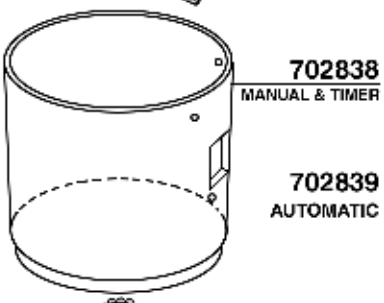

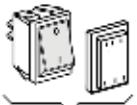





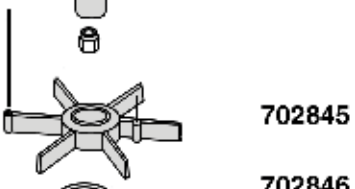

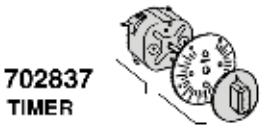



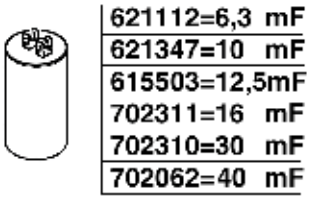

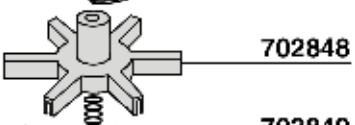

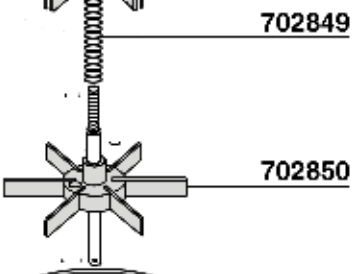



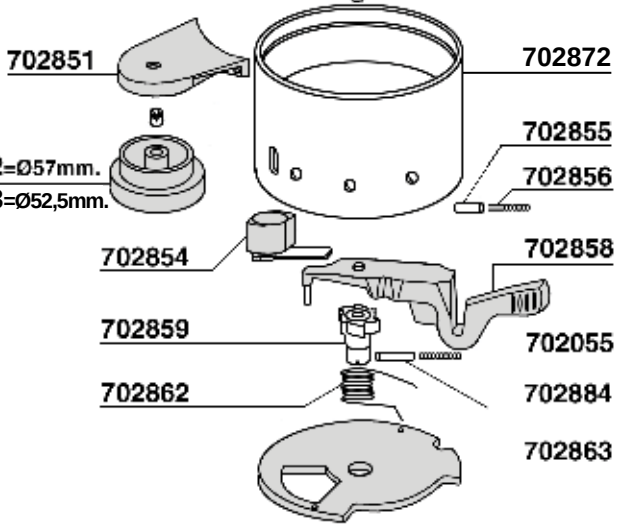

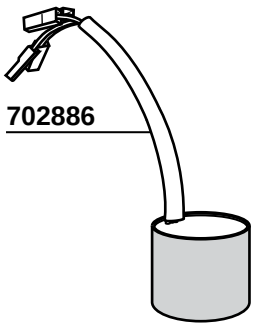

MACINACAFFE’

MACAP MODEL M2D

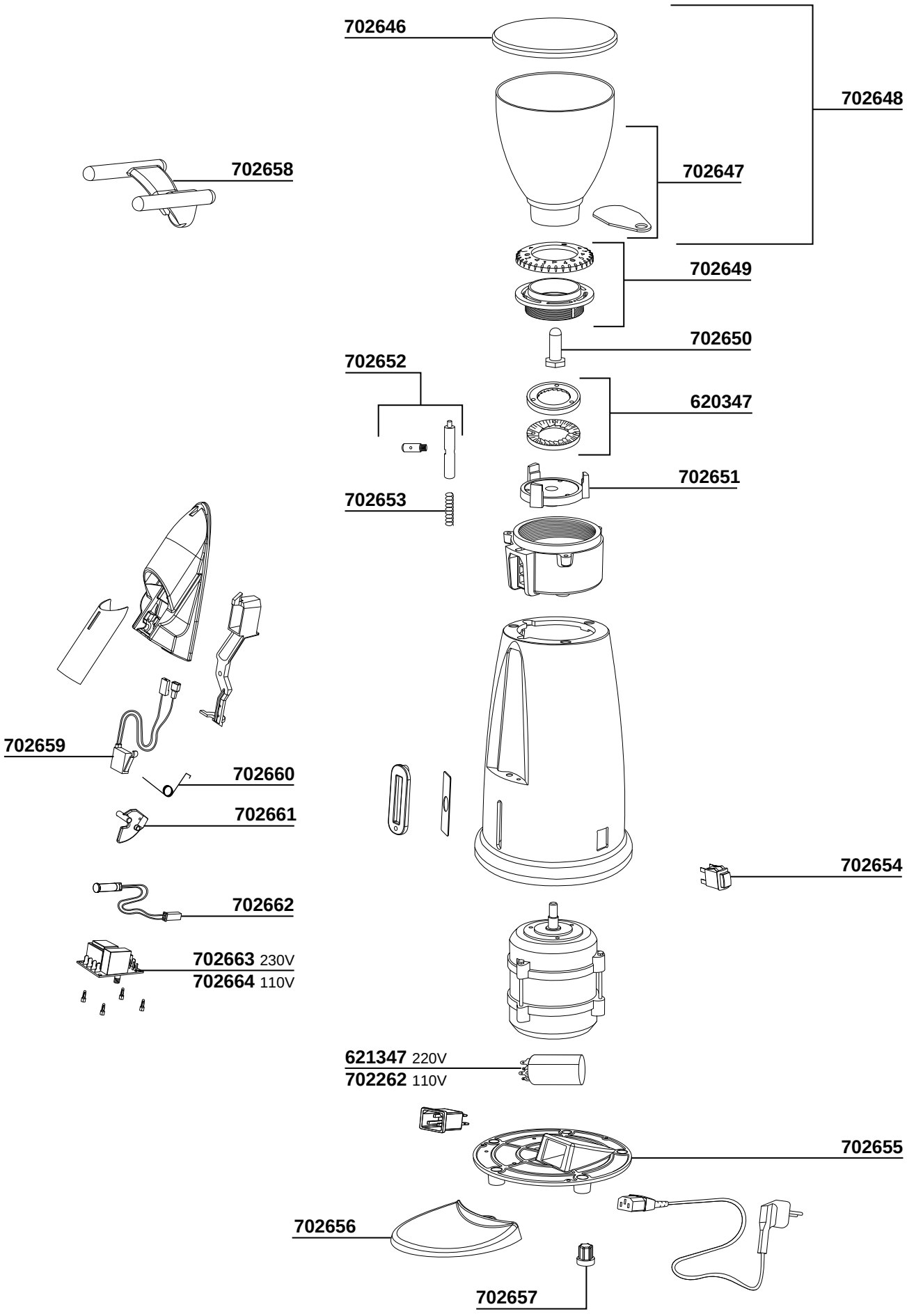

MACAP MODEL M5D-M5D PLUS

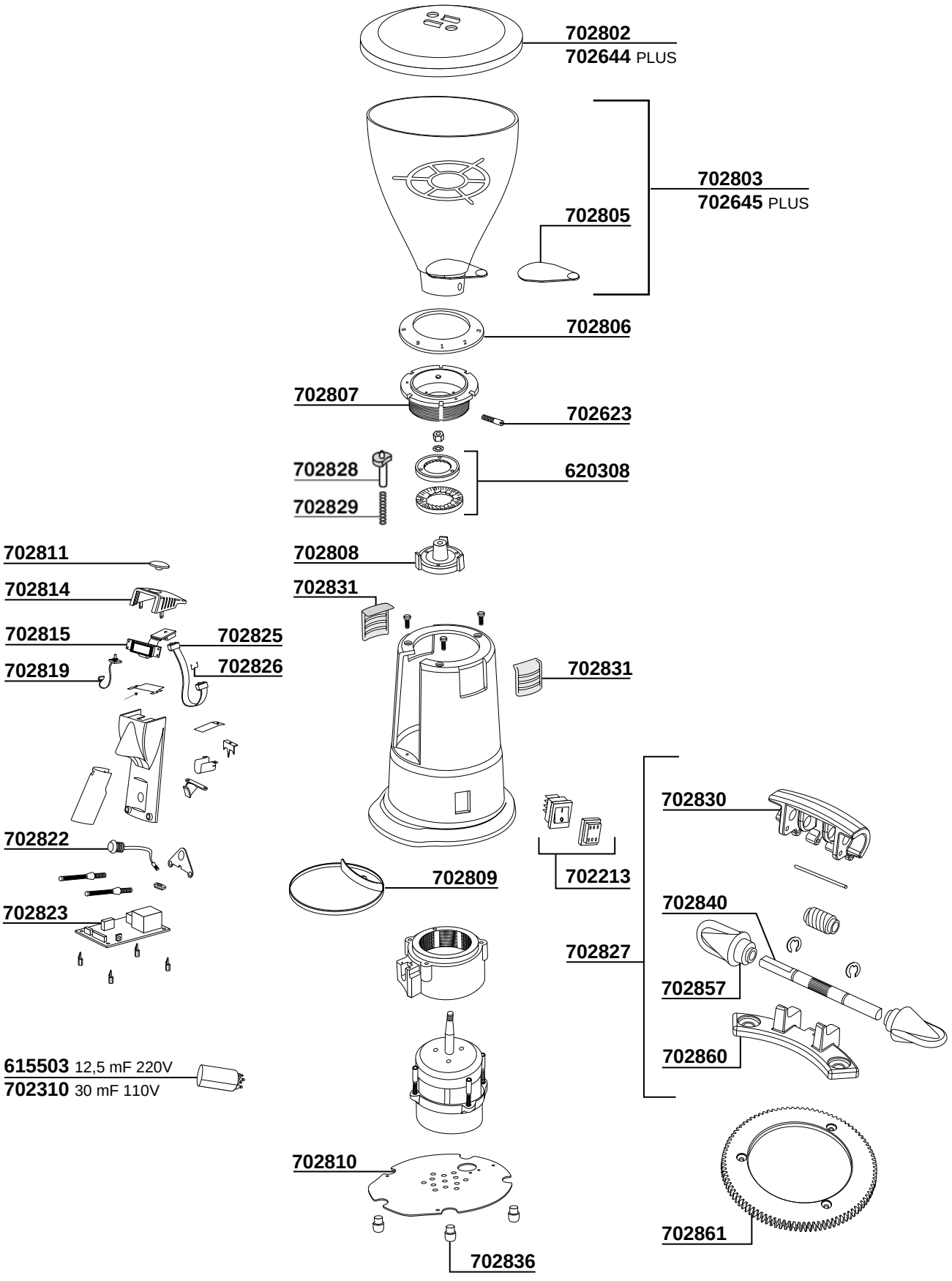

MACINACAFFE'

MACAP MODEL M7D

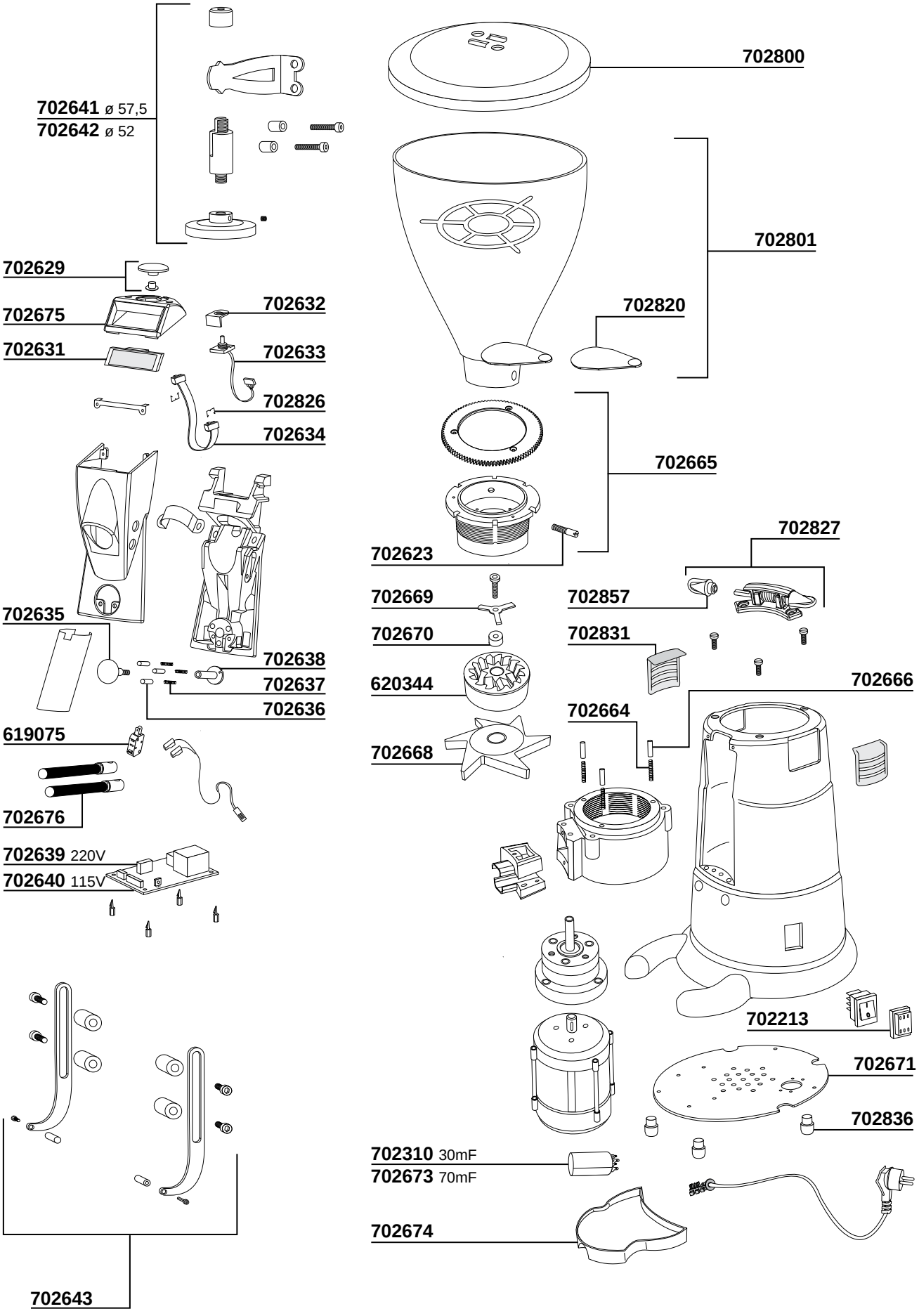

MACINACAFFE'

MACAP MODEL MXD Xtreme

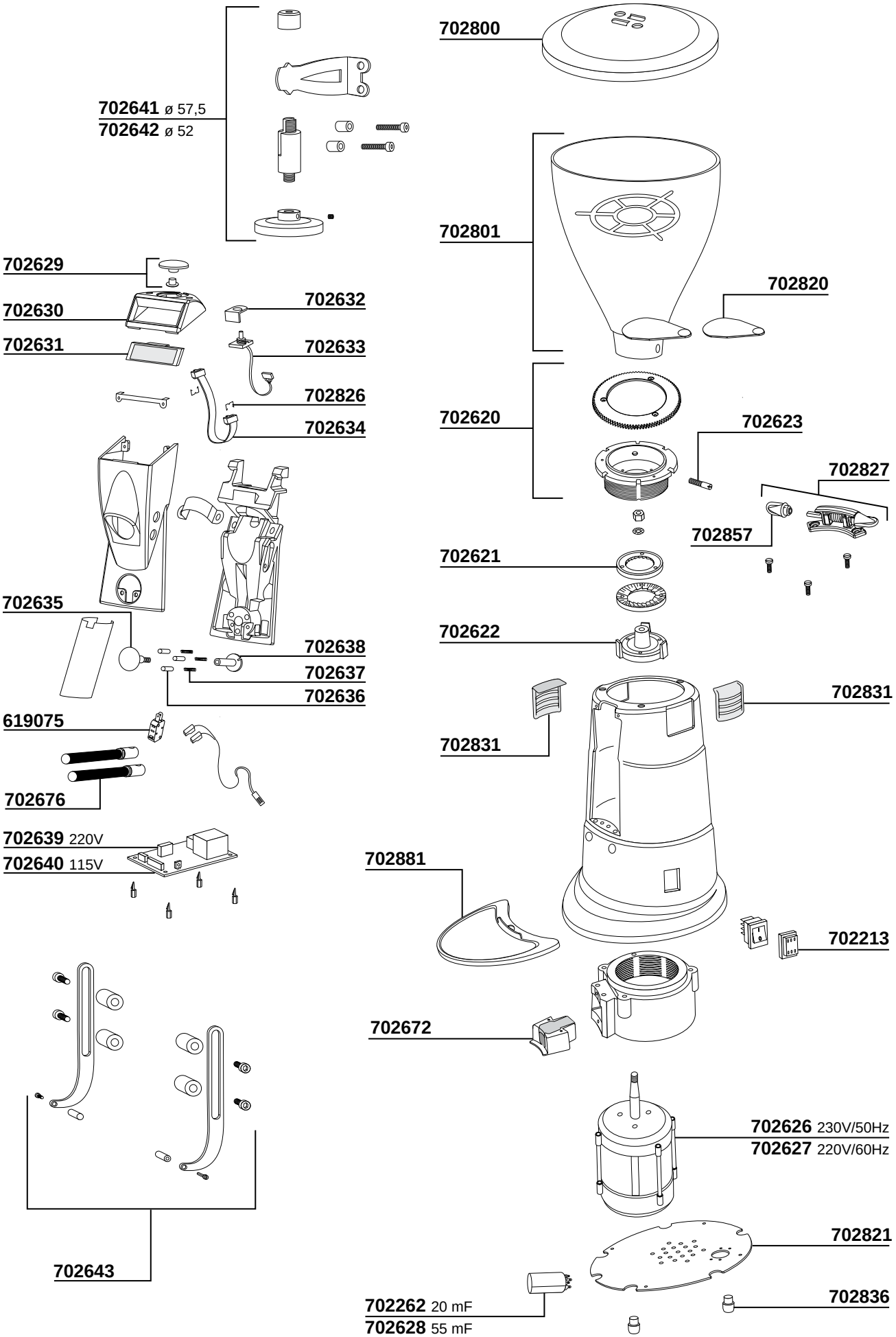

MACINACAFFE’ Tav. 35

MACAP MODEL CPS

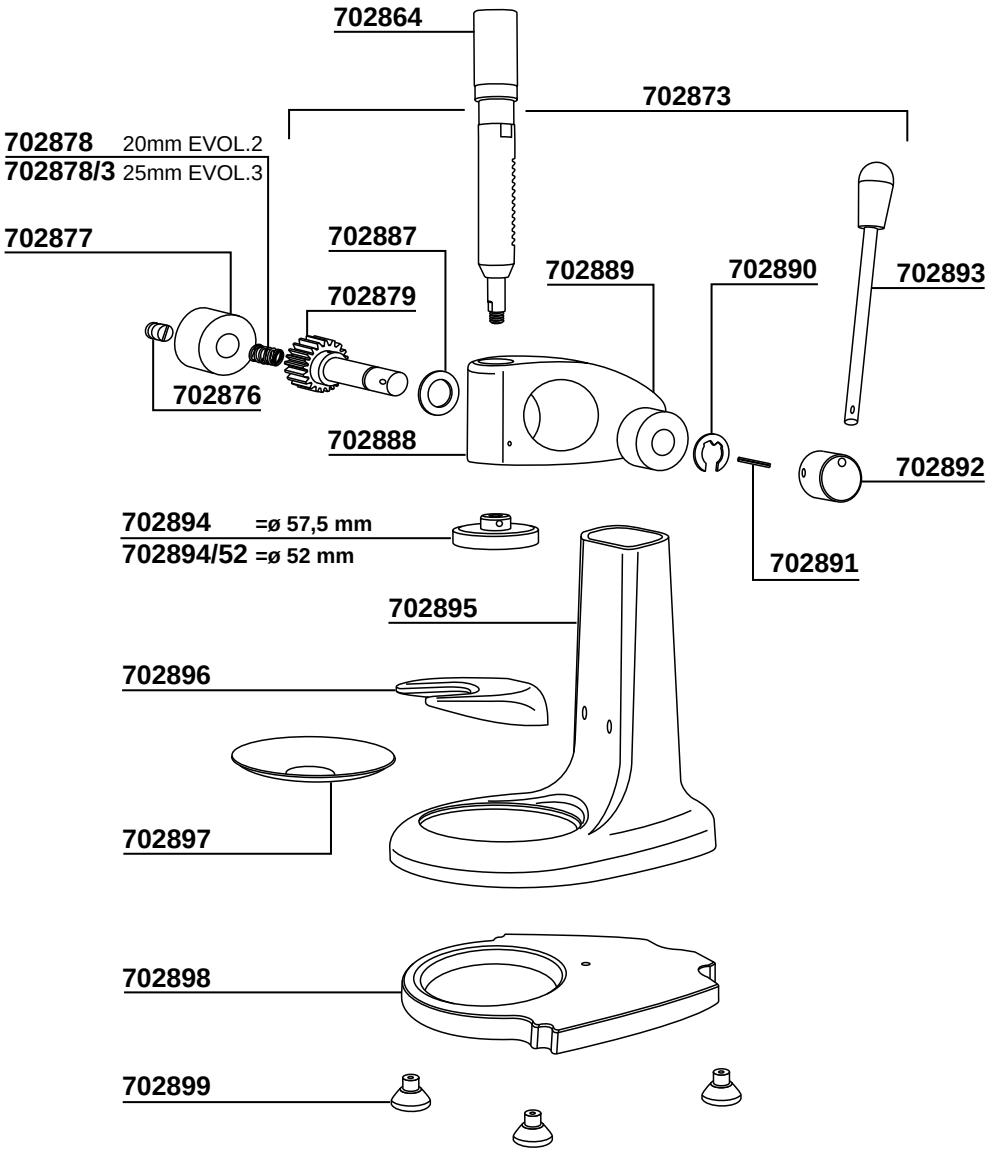

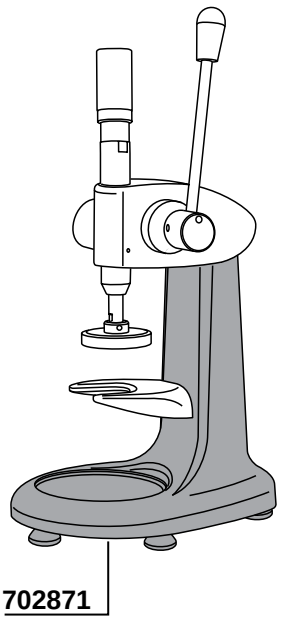

MAZZER MODEL: JOLLY - MAJOR

JLY =MODEL JOLLY MJR =MODEL MAJOR

S= MANUAL A= AUTOMATIC

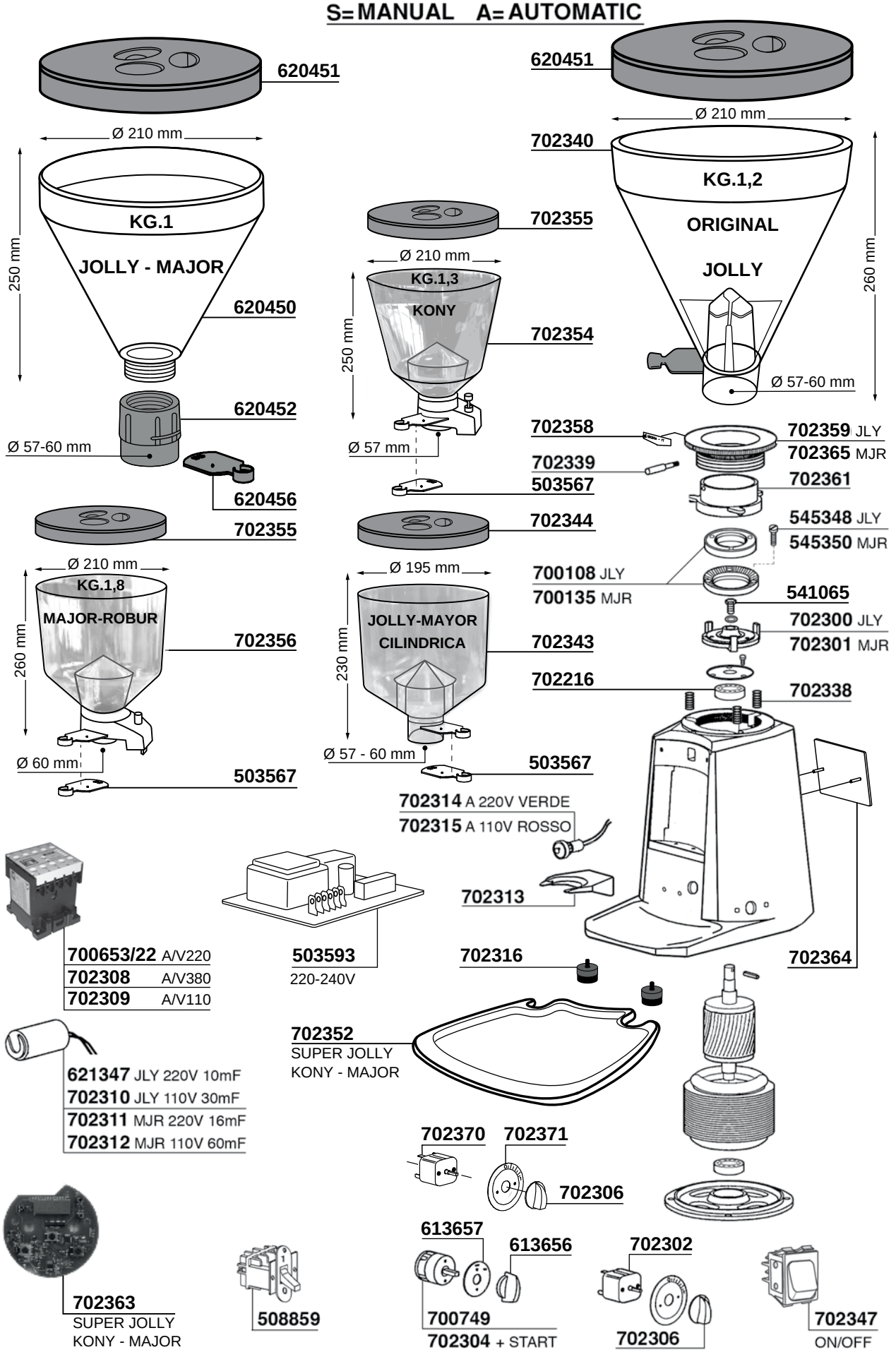

MACINACAFFE' Tav.37

MAZZER MODEL: MINI

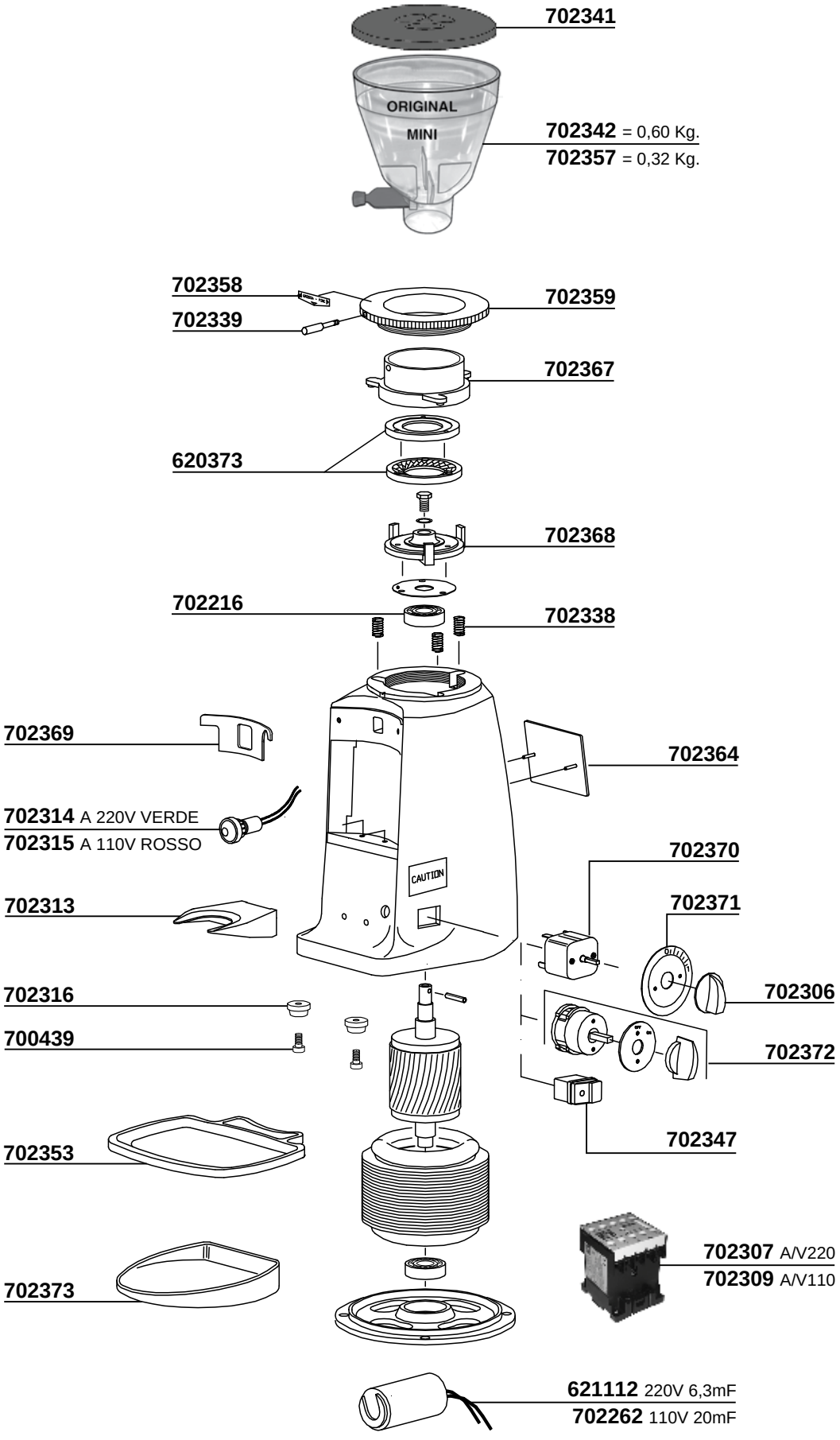

702341

702342 = 0,60 Kg.
702357 = 0,32 Kg.

702358
702339
702359
702367
620373
702368
702216
702338
702369
702364
702314 A 220V VERDE
702315 A 110V ROSSO
702370
702313
702371
702316
702306
700439
702372
702347
702353
702307 A/V220
702309 A/V110
702373
621112 220V 6,3mF
702262 110V 20mF

MAZZER MODEL: JOLLY-MAJOR-MINI

JLY=MODEL JOLLY **MJR=MODEL MAJOR**
S=MANUAL **A=AUTOMATIC**

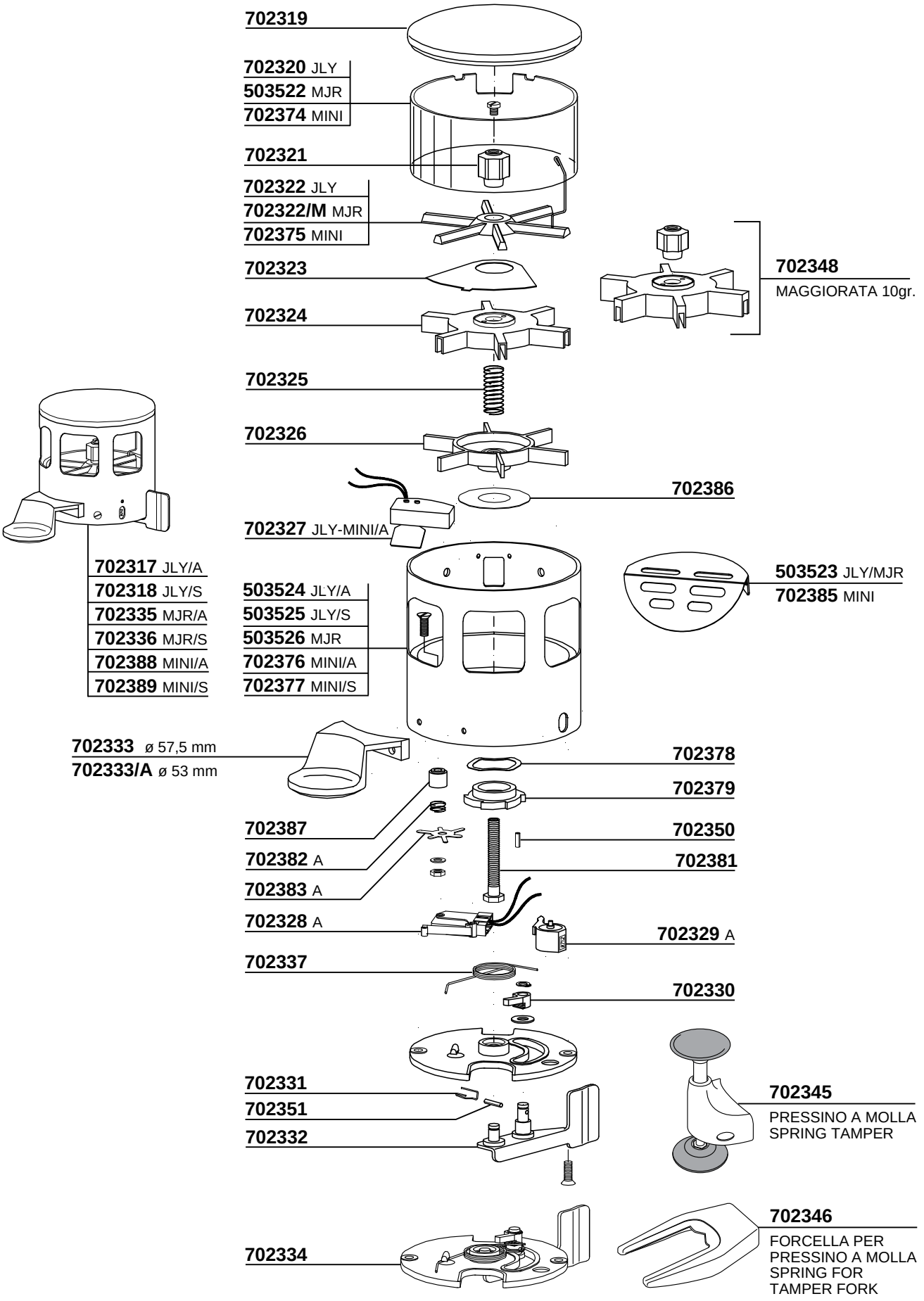

MAZZER MODEL:MINI ELETRONICO A-B

390

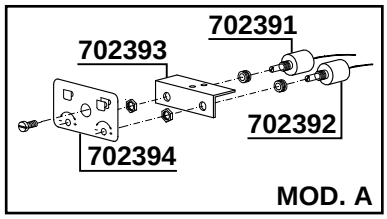

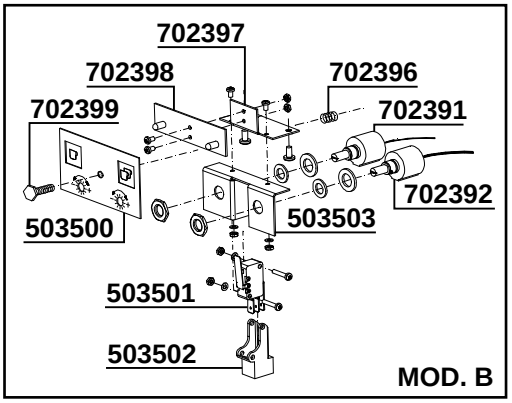

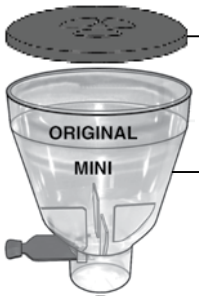

702341

702342 = 0,60 Kg.
702357 = 0,32 Kg.

702358
702339
702359
702390
620376
702300
702216
702338
702364
702395
702347
702316
700439
702353
702373

Modello **A**
503504 230V/50-60Hz
503505 110V/60Hz
503506 100V/50-60Hz

Modello **B**
503507 230V/50-60Hz
503508 110V/60Hz

621112 220V 6,3mF
702262 110V 20mF

MAZZER MODEL:MINI ELETRONICO A-B

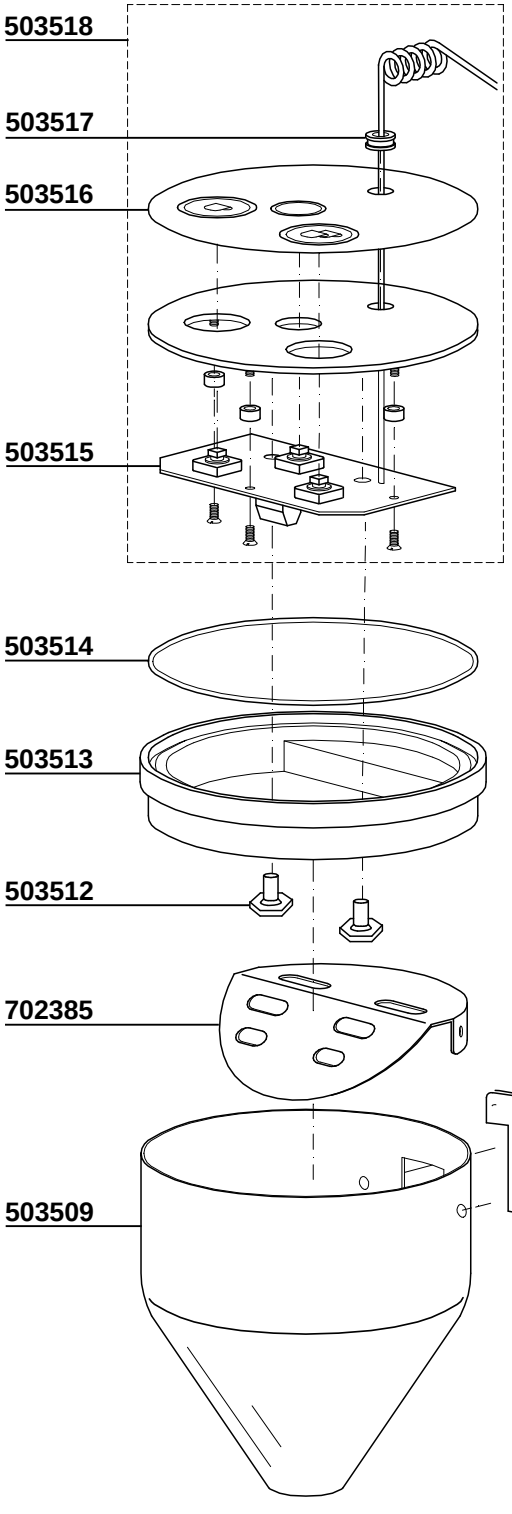

MOD. A

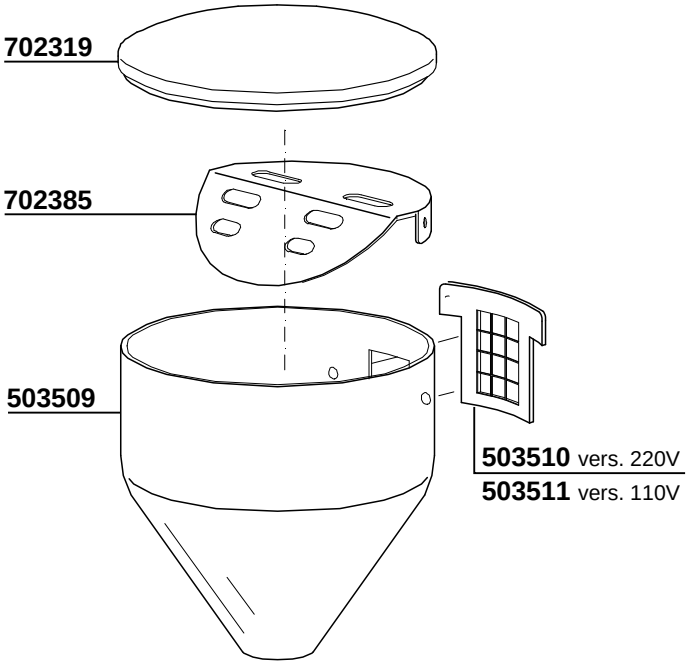

MOD. B

MACINACAFFE'

MAZZER MODEL: ROBUR DOSATORE

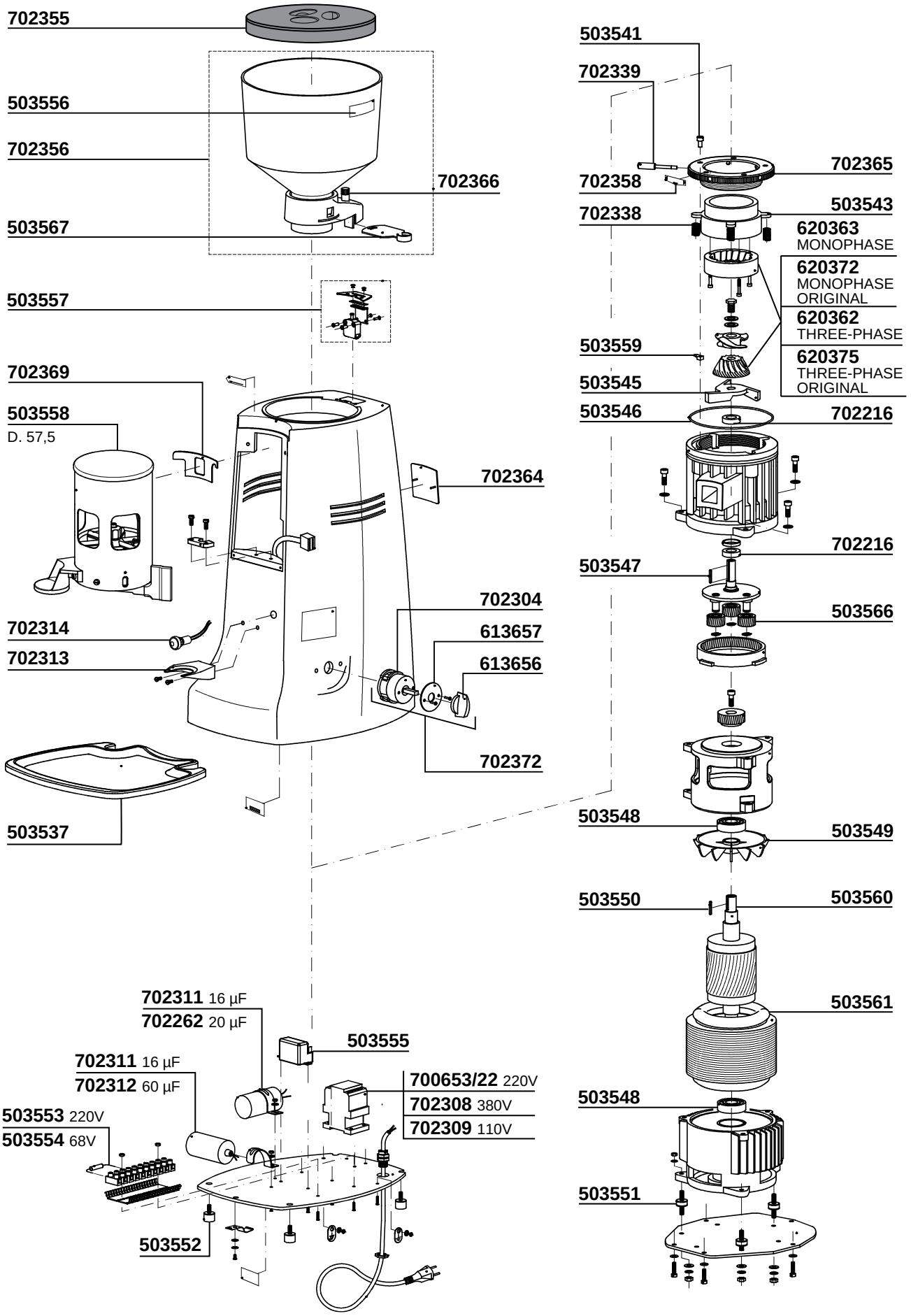

MACINACAFFE' Tav. 42

MAZZER MODEL: ROBUR DOSATORE

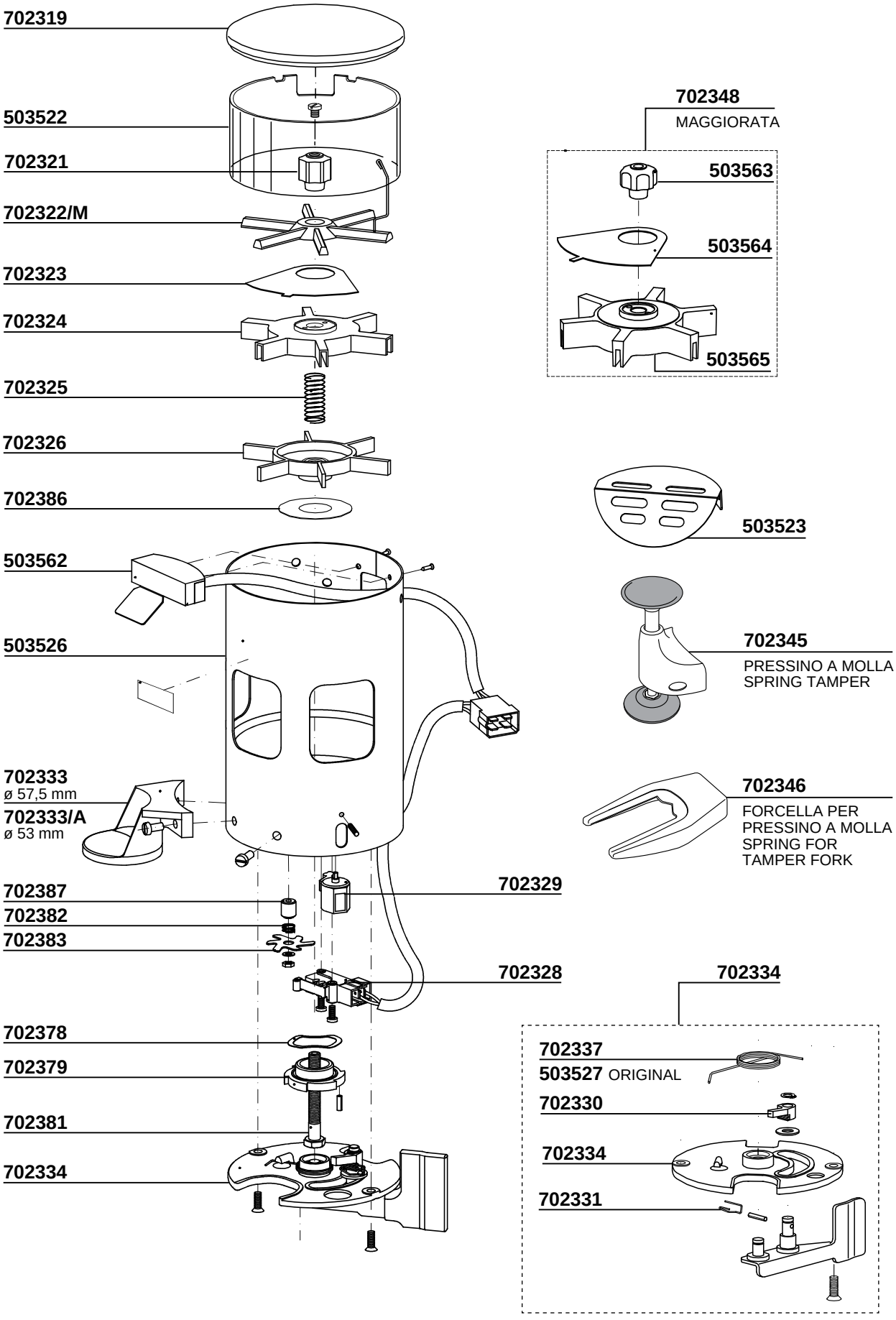

MAZZER MODEL: ROBUR ELETTRONICO

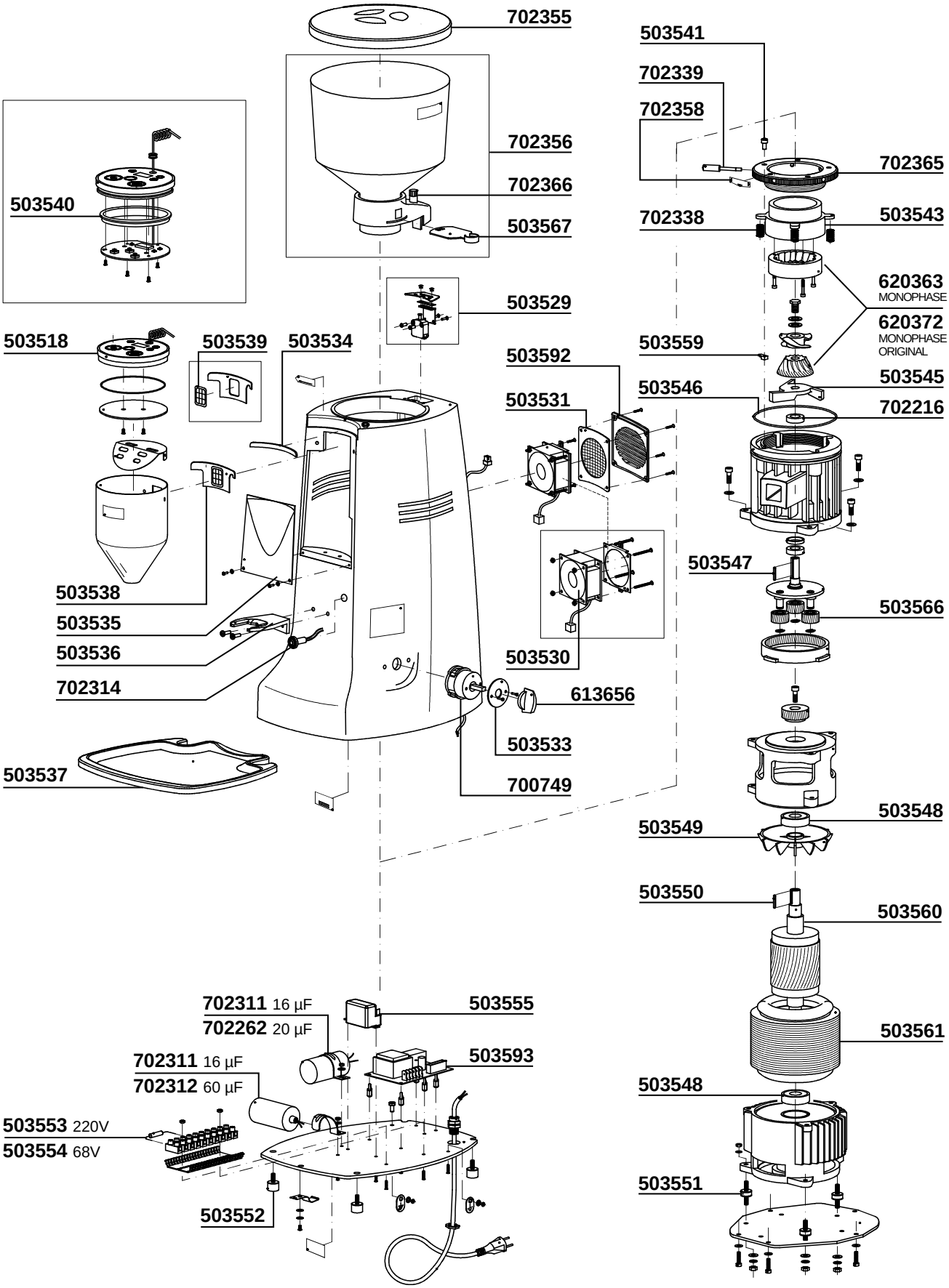

NUOVA SIMONELLI MODEL: GRINTA AMM-AMMT

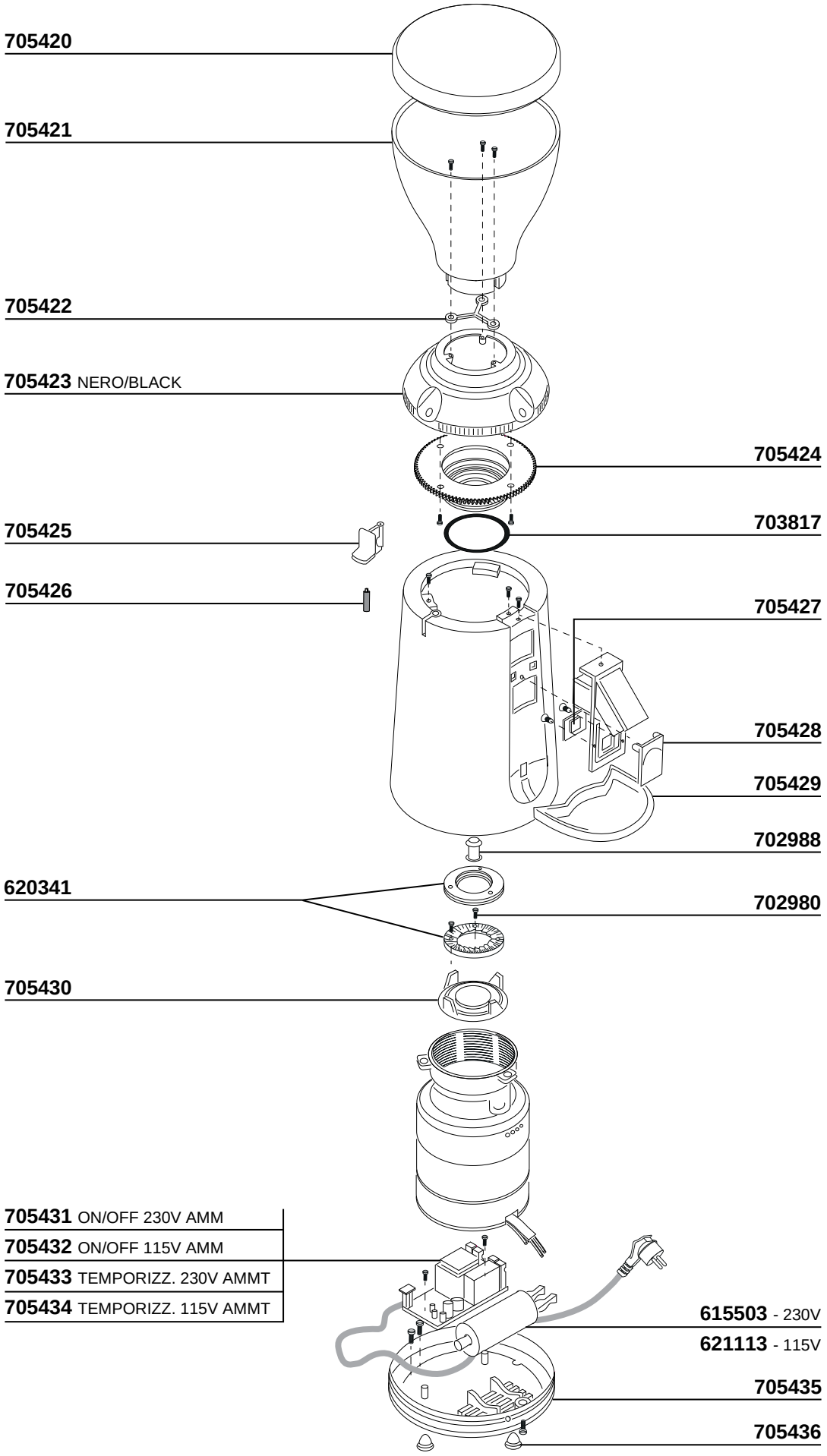

MACINACAFFE' Tav. 45

NUOVA SIMONELLI MODEL: MYTHOS ONE

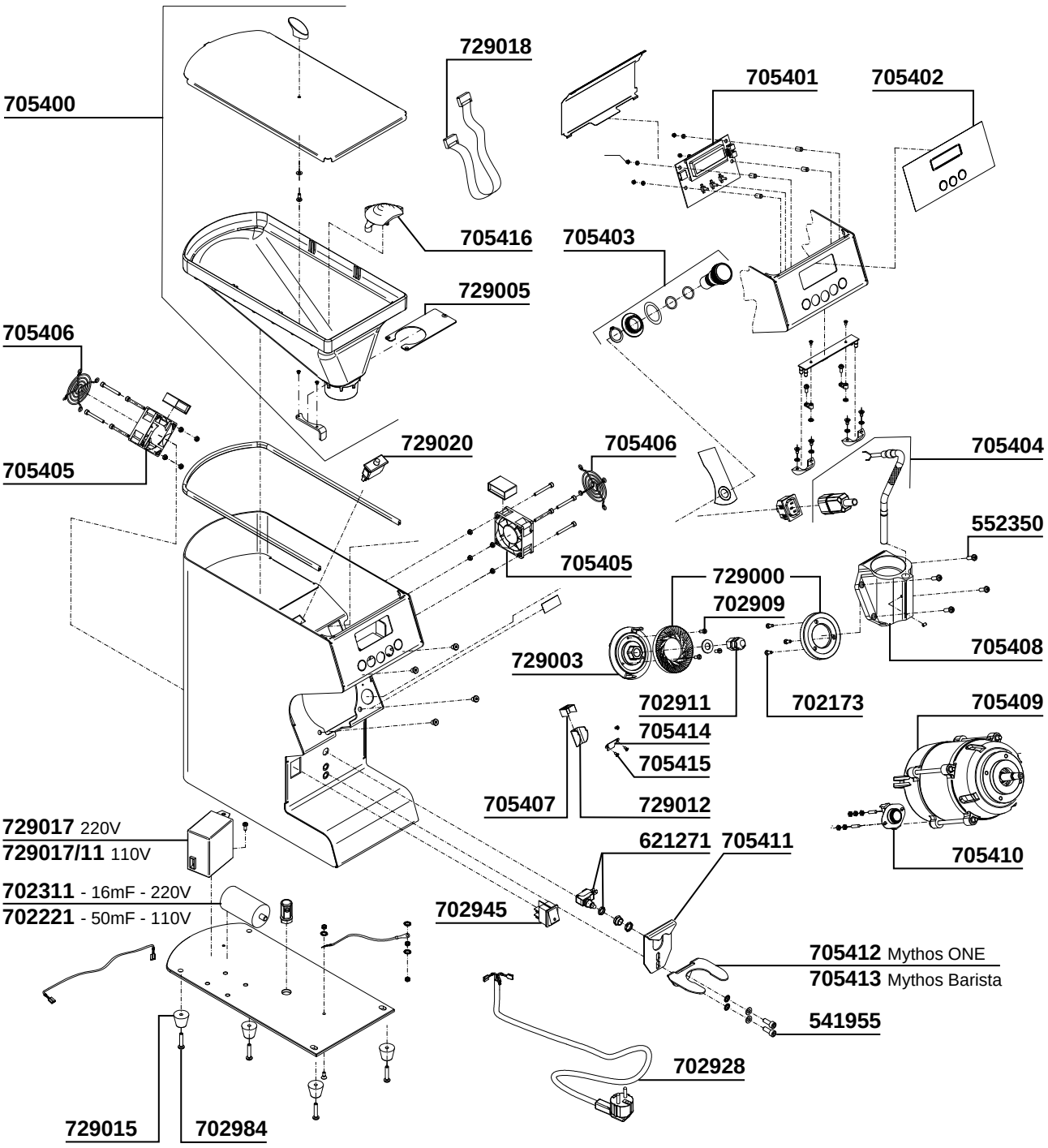

MACINACAFFE'

OBEL MODEL:DSQ - NR1400 - NR900

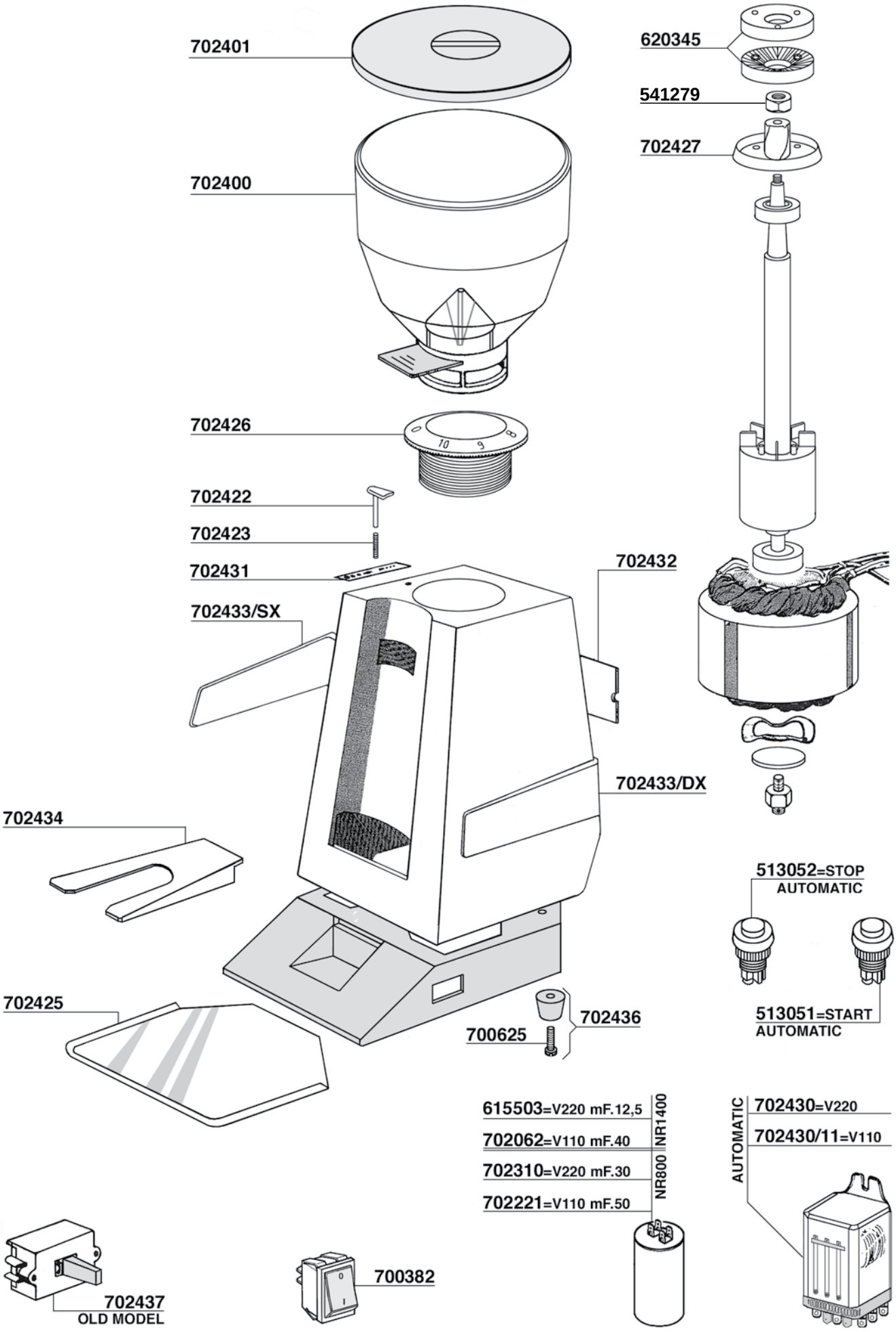

MACINACAFFE'

OBEL MODEL: EB

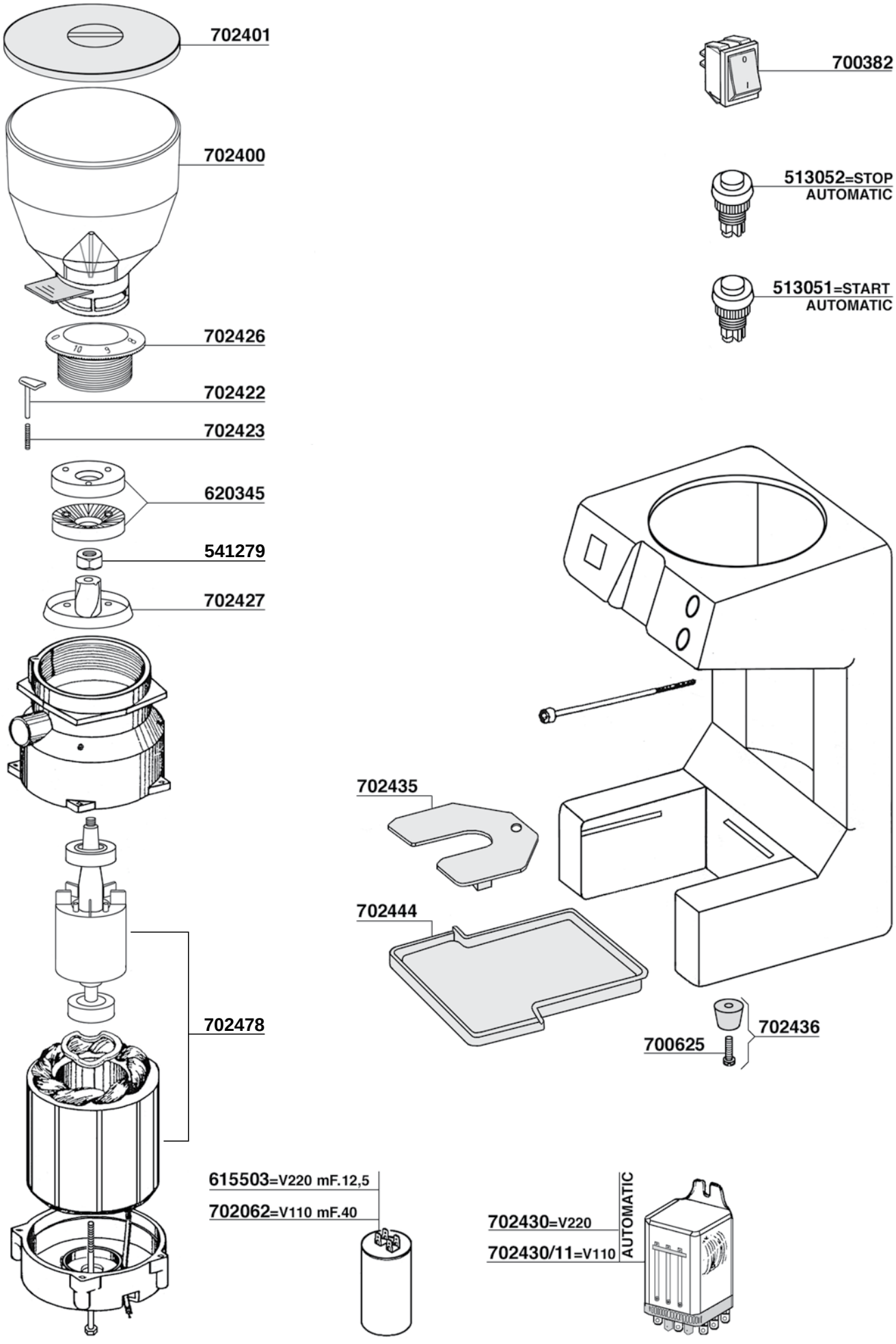

OBEL MODEL: DSQ-EB-NR1400-NR900-MITO

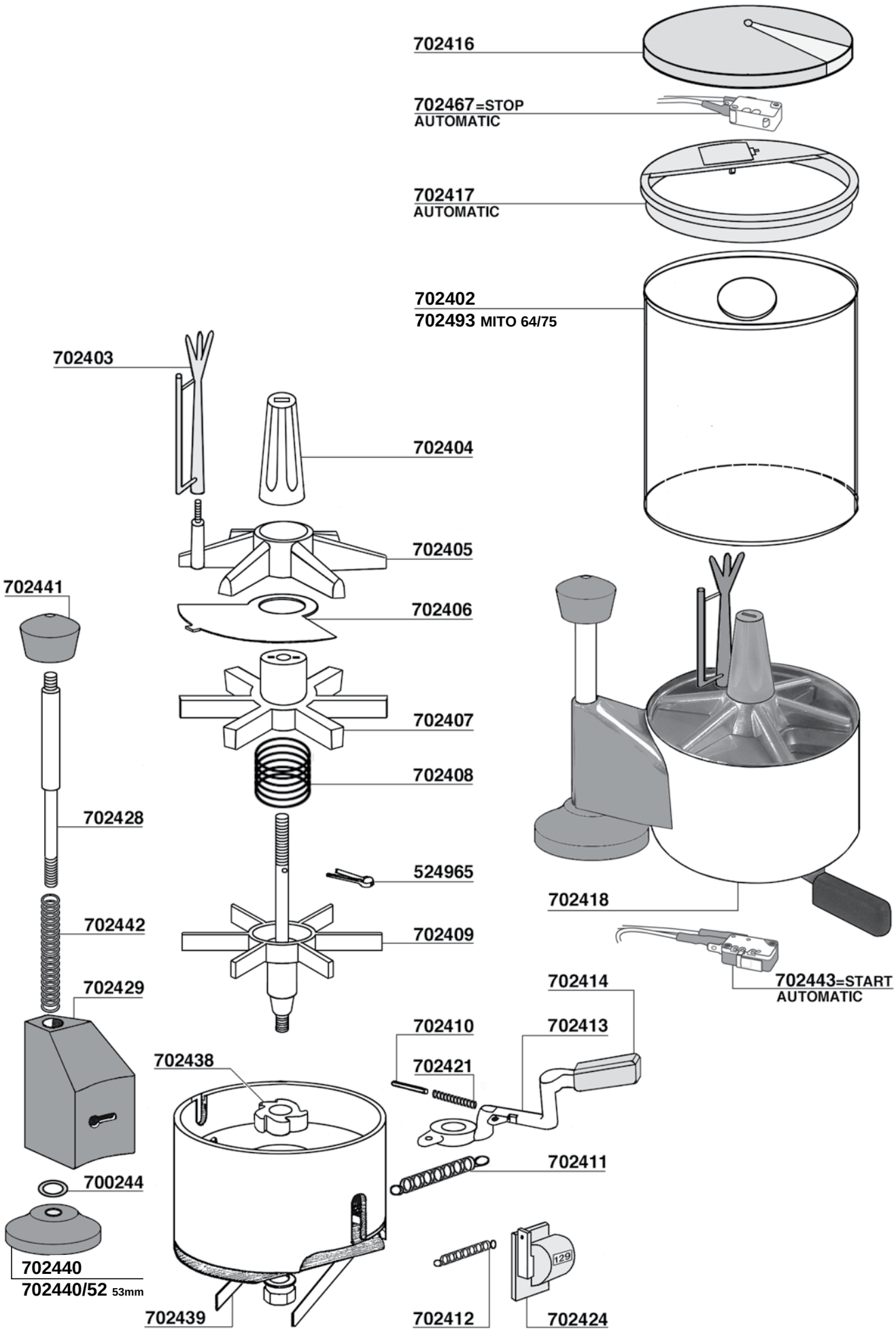

MACINACAFFE'

OBEL MODEL:JUNIOR - ROMA

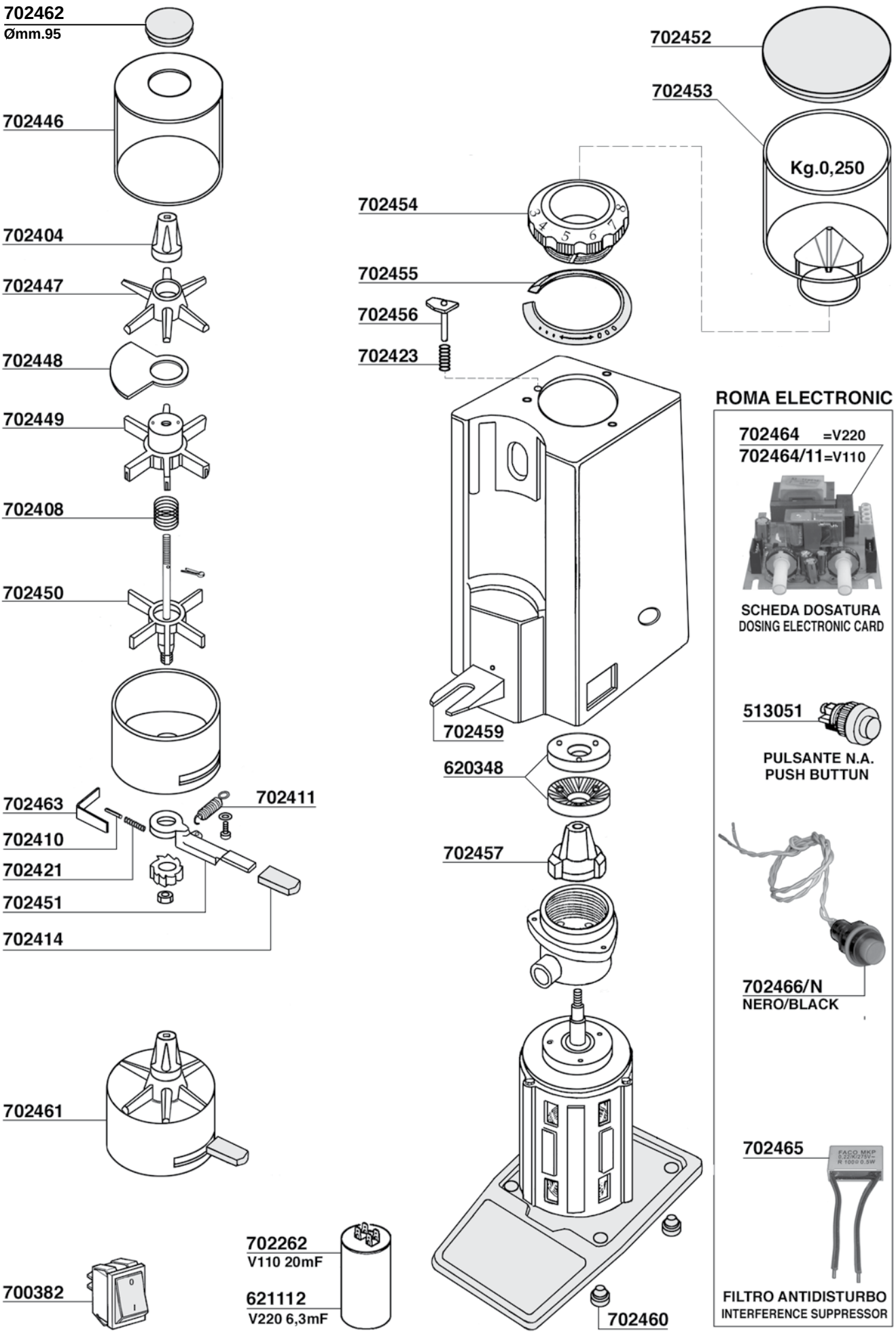

MACINACAFFE’ Tav.50

OBEL MODEL: MITO ATR – MITO ON DEMAND

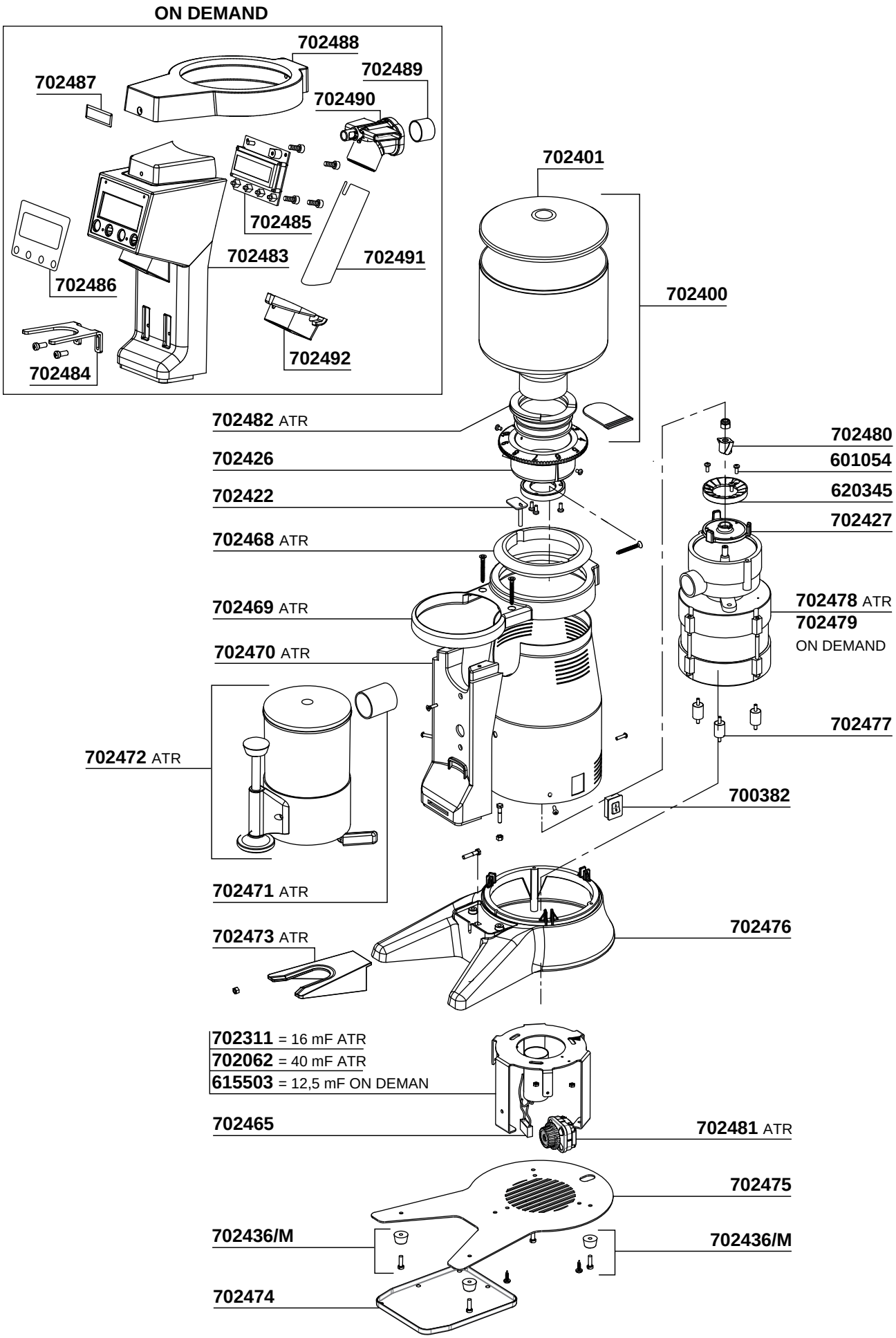

QUAMAR MODEL: T.80A - T.80E

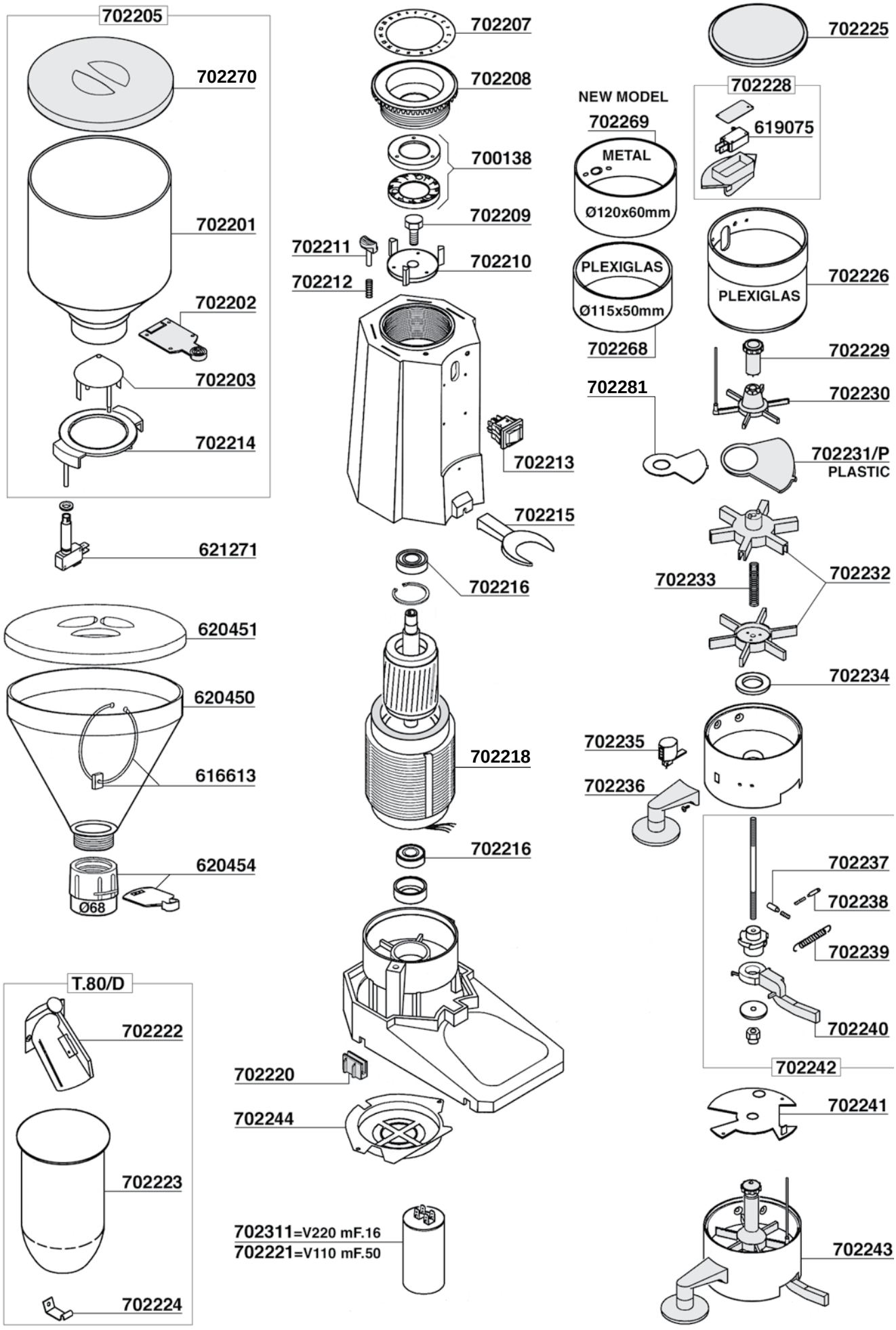

QUAMAR MODEL: T.48A

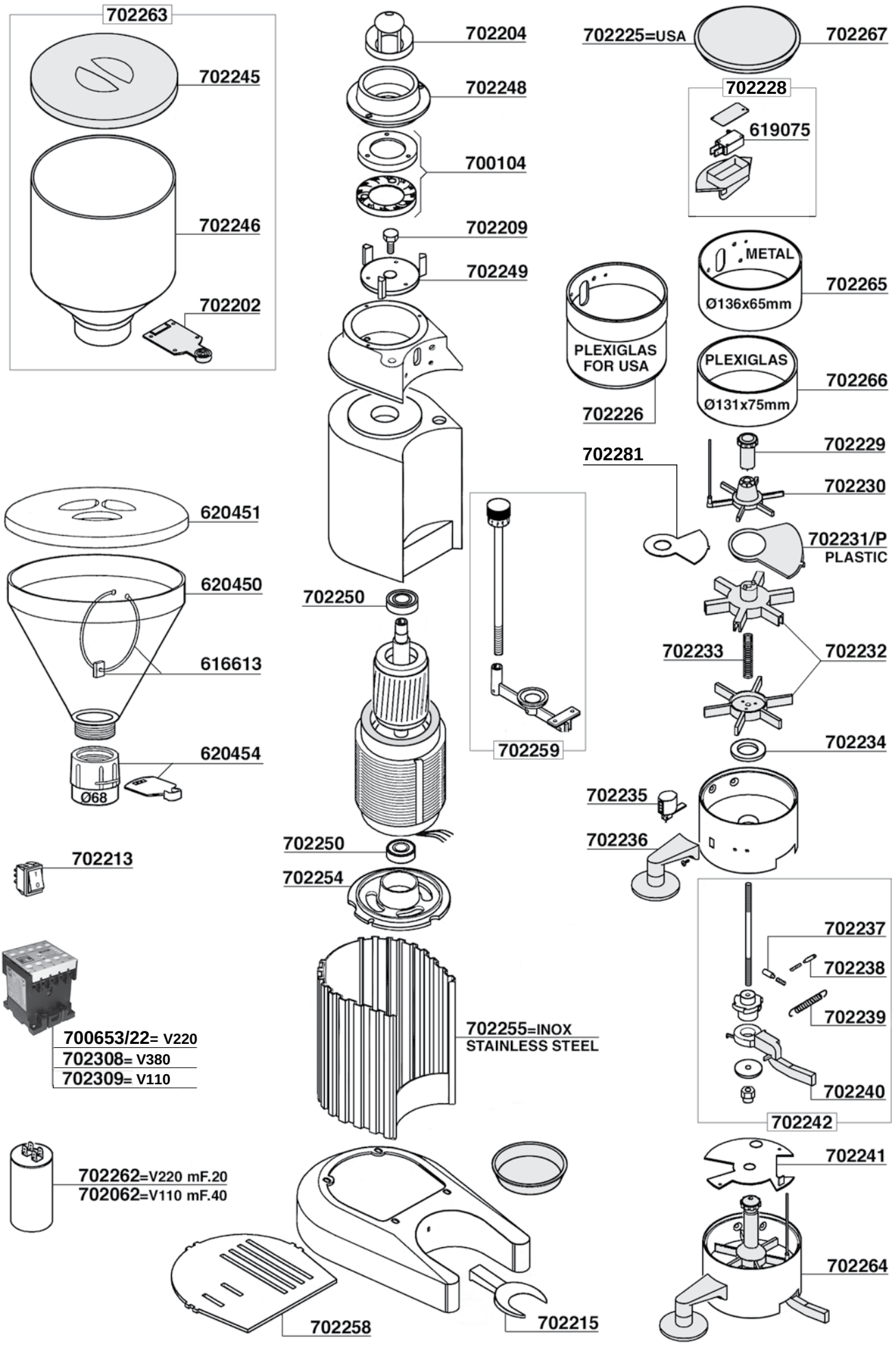

MACINACAFFE' Tav.53

QUAMAR MODEL: M80 AUT.-MAN.-TEMPORIZZATO

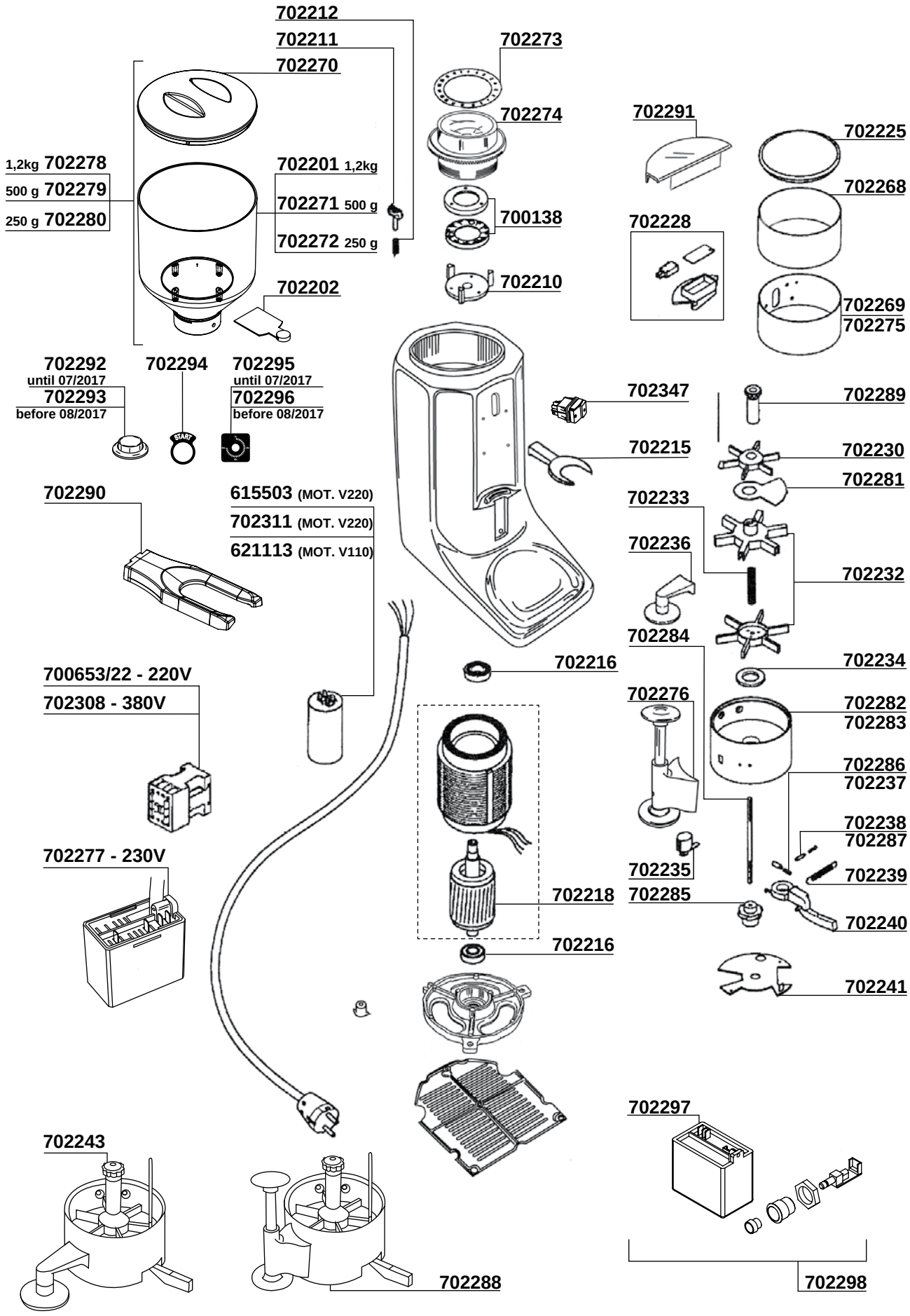

QUAMAR MODEL: M80/E

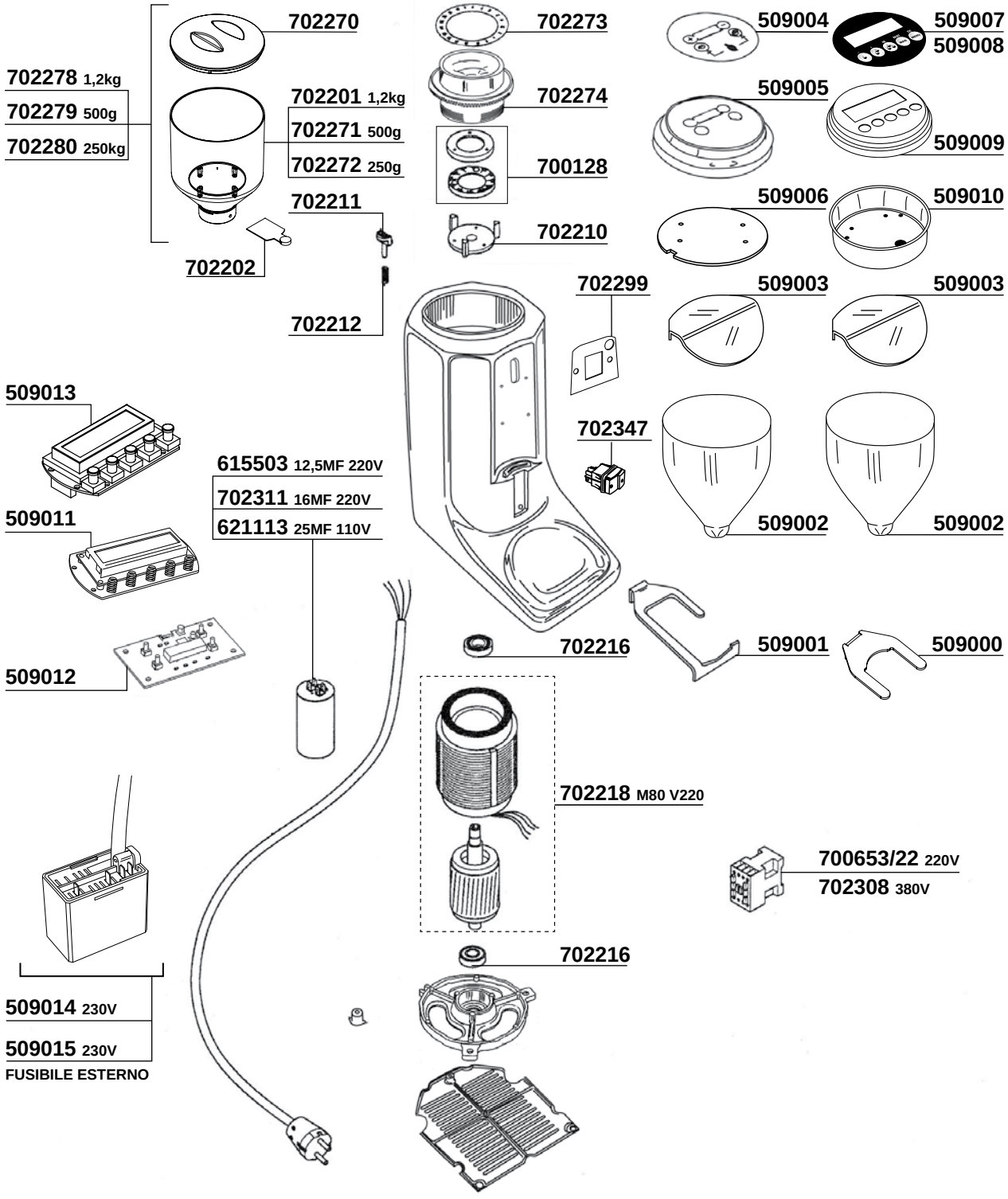

MACINACAFFE'

RANCILIO : KRIO 65 AT - ST

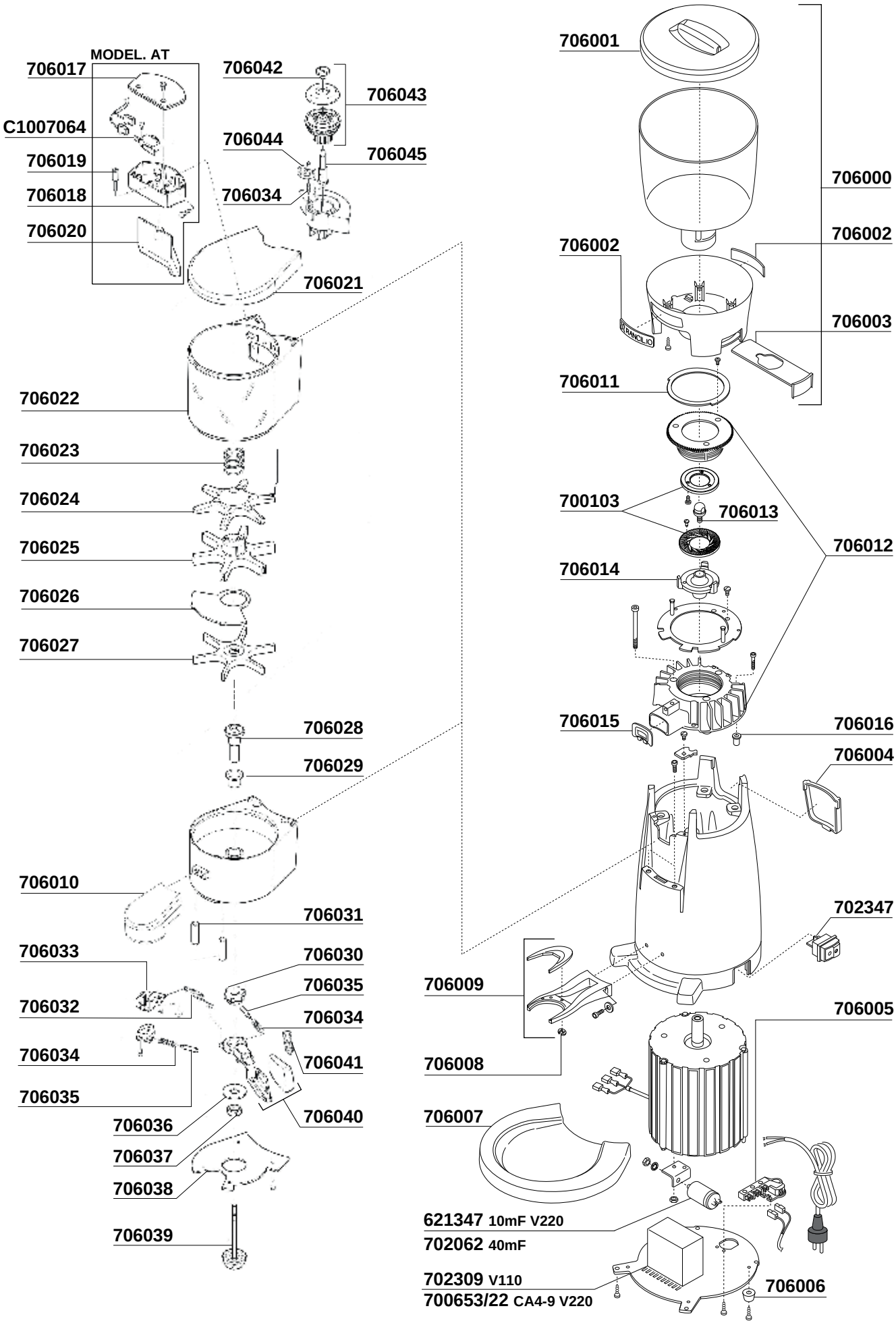

MACINACAFFE'

RANCILIO : KRIO 65 OnDemand

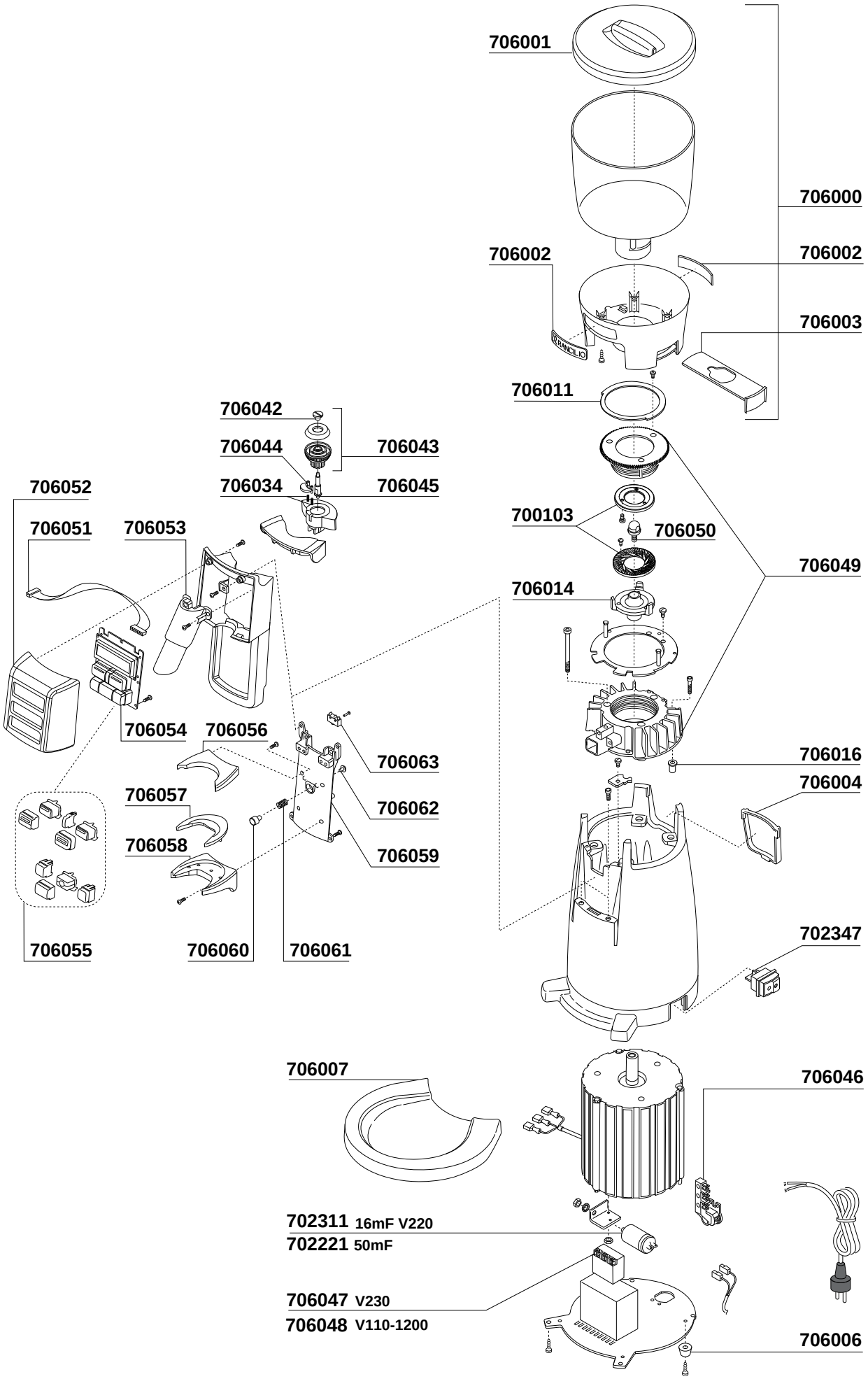

ROSSI MODEL: RR45 - CC45

S=MODEL MANUAL A=MODEL AUTOMATIC

408

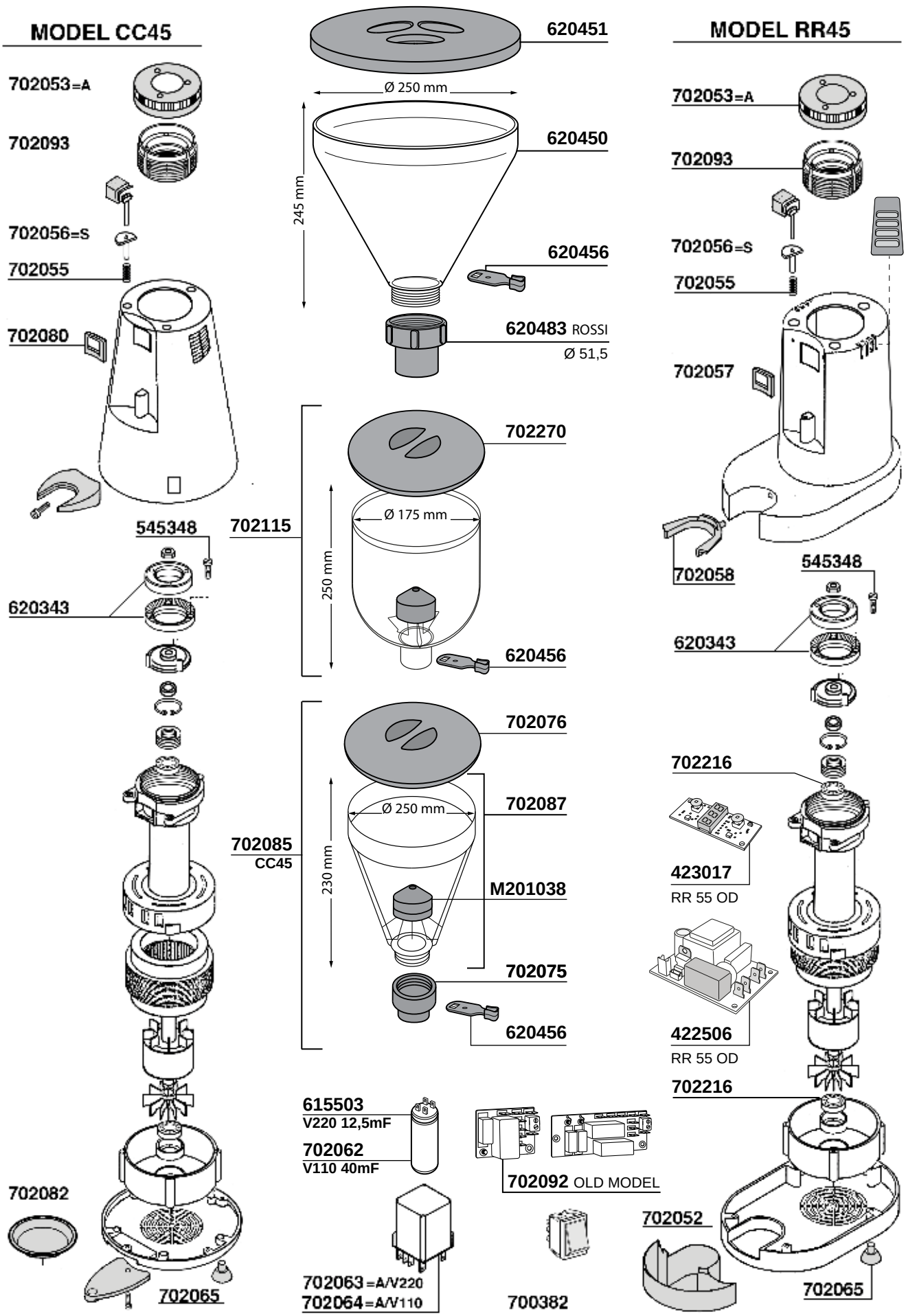

ROSSI MODEL: RR45 - CC45

S=MODEL MANUAL A=MODEL AUTOMATIC

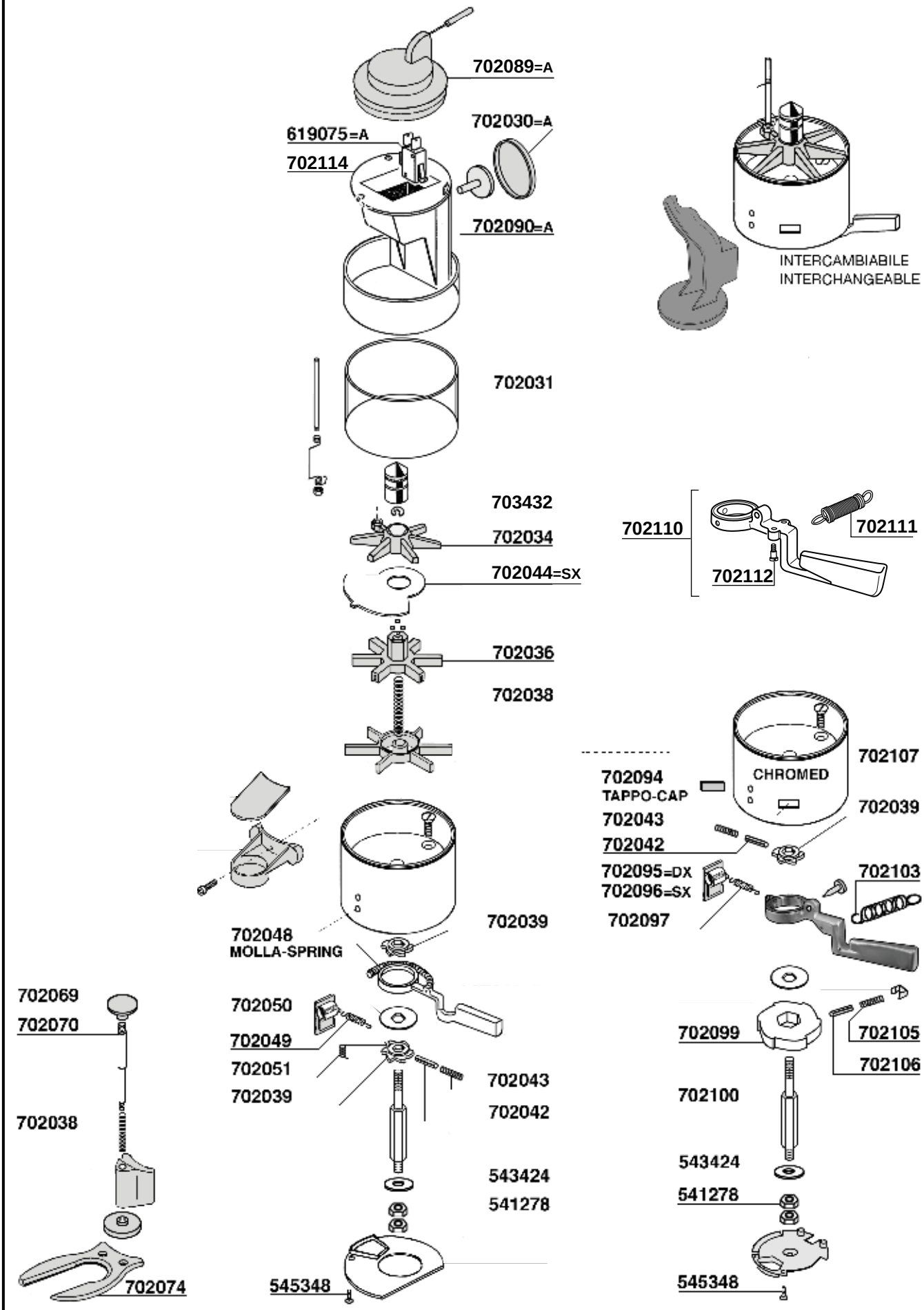

MACINACAFFE' LUX - DELUX

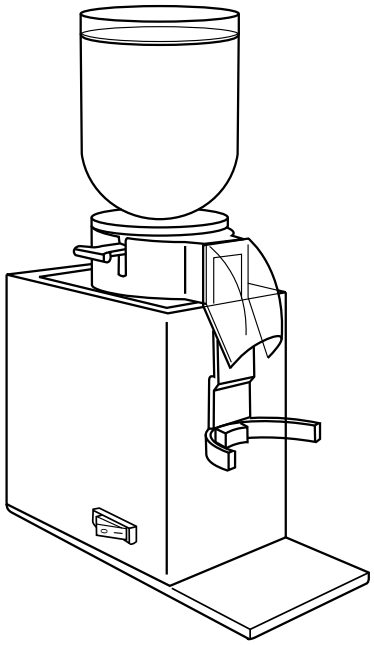

702503 - LUX
MACINACAFFE' COMPLETO

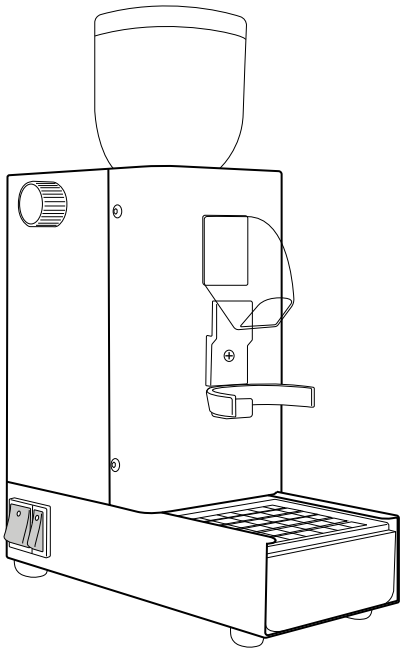

702508 - DELUX
MACINACAFFE' COMPLETO

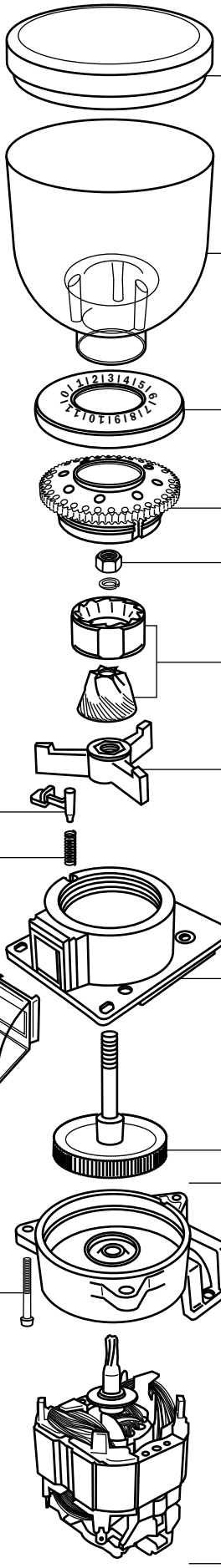

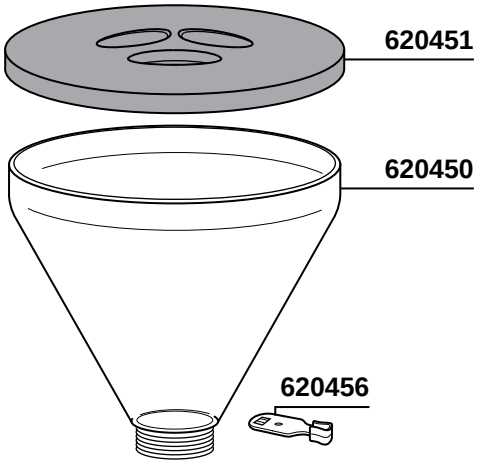

620452 MAZZER
Ø 57-60



620449 OBEL
Ø 65,5



620453 FAEMA
Ø 55



620481 S.MARCO
Ø 67



620454 FIORENZATO
Ø 68 FIORENZATO MC
MACAP

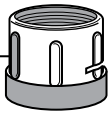

620482 GAGGIA
Ø 63



620455 FAEMA SILVER-CIMBALI
Ø 54



620483 ROSSI
Ø 51,5



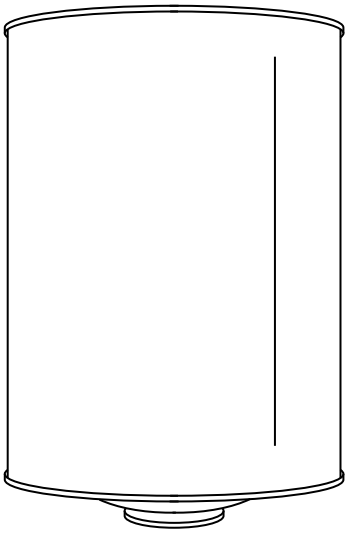

620484
mod. Vulcano per Illy

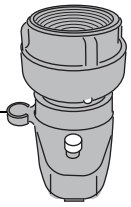

620457
x bocchettone Rossi
Ø sup. 70 mm
Ø foro passante 50 mm

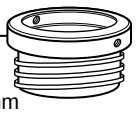

620461



702075 Ø 51
702075/C Ø 47

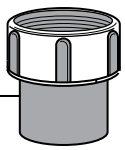

620456



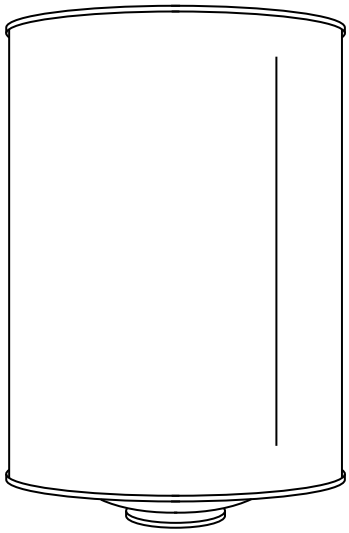

620459



620458
x bocchettone plastica
Ø sup. 70 mm
Ø foro passante 39,9 mm



620461



620460
x campane filett.
tipo Illy





620456





620456



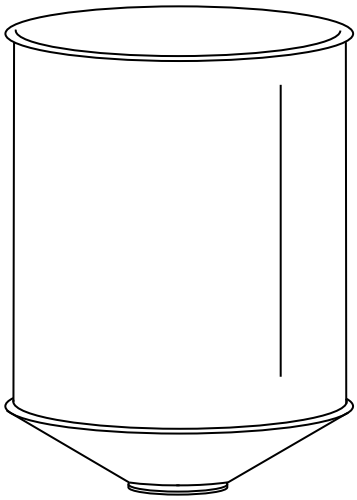

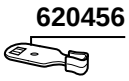

620456



620460
x campane filett.
tipo Illy

620452 MAZZER
Ø 57-60





620449 OBEL
Ø 65,5

620453 FAEMA
Ø 55





620481 S.MARCO
Ø 67

620454 FIORENZATO
Ø 68 FIORENZATO MC
MACAP

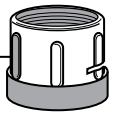



620482 GAGGIA
Ø 63

620455 FAEMA SILVER-CIMBALI
Ø 54





620483 ROSSI
Ø 51,5

CODICE *code*	MACINACAFFE' *coffee grinder*	ROTAZIONE *rotation*	Ø *out*	Ø *in*	SPESSORE *thickness*	FORI *holes*
702725	**ANFIM**	SX	50	30	7,5	3
702750	**ANFIM**	SX	54	32	8	3
700131	**ANFIM**	SX	64	36	9	3
700131/T	**ANFIM TITANIO**	SX	64	36	9	3
620351	**ANFIM - MACAF - OBEL GLOBO**	SX	75	43	9	3
620351/T	**ANFIM RIV. TITANIO**	SX	75	43	9	3
700136	**ANFIM 450 RPM**	SX	75	42	10	3
700136/T	**ANFIM 450 RPM TITANIO**	SX	75	42	10	3
700137	**ANFIM 450 RPM TITANIO ORIGINAL**	SX	75	42	10	3
702605	**LUX-DELUX**	DX	38/30	7,2	17	-
700103	**AURORA**	SX	64	38	9	3
620340	**BRASILIA**	SX	50	31	8,5	3
620343	**BRASILIA**	SX	64	38	9	3
620342	**BRASILIA**	SX	83	45	10	3
700134	**CASADIO**	SX	64	35	10	2
700105	**CASADIO**	SX	84	45	10,5	3
620344	**CASADIO CONICHE**	DX	68	13c	25	4
620324	**CASADIO ENEA**	DX	63,5	38	9	3
620312	**CASADIO THEO**	DX	64	38	9	3
620313	**CASADIO THEO**	DX	84	45	9	3
620314	**CASADIO CONICHE THEO**	DX	68/49	11	25	4
700106	**CIMBALI**	DX	54	32	9	3
700102	**CIMBALI-DRM-6S (sesta serie)**	DX	64	37	9	3
700172	**CIMBALI-DRM PIANA (x coniche)**	DX	68	43	8	3
700172/O	**CIMBALI-DRM PIANA (x coniche) ORIGINAL**	DX	68	43	8	3
700111	**CIMBALI MAGNUM ON DEMAND**	DX	63,5	38	9	3
620366	**CUNIL MG19**	SX	59	30	9	3
620367	**CUNIL MG21**	SX	59	33/30	9	3/0
620352	**EROS CONICHE**	DX	68	13	25	-
620341	**EUREKA**	DX	50	30	7,5	3

CODICE *code*	MACINACAFFE' *coffee grinder*	ROTAZIONE *rotation*	Ø *out*	Ø *in*	SPESSORE *thickness*	FORI *holes*
620302	**EUREKA**	DX	65	38	9	3
620322	**EUREKA TRIFASE**	DX	65	38	9	3
620303	**EUREKA**	DX	60	38	9	3
620344	**EUREKA CONICHE**	DX	68	13c	25	4
620349	**EUREKA**	DX	75	38	9	3
729000	**EUREKA MYTHOS TITANIO ORIG.**	DX	75	38	9	3
620383	**EUREKA MYTHOS TITANIO**	DX	75	38	9	3
508962	**FAEMA FP - FUTURMAT**	SX	54	31	8	3
616730	**FAEMA MP - MPN**	DX	54	31	8	3
508880	**FAEMA FM**	SX	62	38	9	3
619956	**FAEMA SILVER - BNZ**	DX	64	38	9	3
631470	**FAEMA MC CONICHE - BNZ CIMBALI CONIK**	DX	68	11	25	4
633539	**FAEMA MD 2000-3000-MAGNUM**	DX	75	43	9	3
700138	**FIORENZATO - FIORENZATO DOGE**	DX	63	38	9	3
620354	**FIORENZATO**	SX	63	38	9	3
620364	**FIORENZATO DOGE CONICHE**	DX	71	13c	25	3
700104	**FIORENZATO-FIORENZATO DOGE-CEADO MC**	DX	83	45	9,5	3
620319	**FIORENZATO M.C. F5**	DX	64	37	8,5	3
620320	**FIORENZATO M.C. F6**	DX	83	49	9,5	3
720049	**FIORENZATO F64E ON DEMAND**	DX	64	37	8,5	3
720057	**FIORENZATO F64EVO**	DX	64	37	8,5	3
720067	**FIORENZATO F4A-F4E ORIGINAL**	DX	58	33	8,5	3
620347	**GAGGIA BABY**	DX	50	30	7,5	3
700141	**GAGGIA - ARISTARCO**	DX	58	36	8	3
700108	**GAGGIA - ARISTARCO**	DX	64	37	8,5	3
620310	**GAGGIA - ARISTARCO**	DX	74	42	9,5	3
700133/4	**GAGGIA - ARISTARCO**	DX	84	46	9	3
700133/5	**GAGGIA MILANO**	DX	85	44	9	3
702824	**MACAP M4-M5-M5 PLUS 1.400 giri**	DX	58	33	8,5	3
620300	**MACAP MC6 - MX 1.400 giri**	DX	65	38	8,5	3

CODICE *code*	MACINACAFFE' *coffee grinder*	ROTAZIONE *rotation*	Ø *out*	Ø *in*	SPESSORE *thickness*	FORI *holes*
620304	**MACAP MC6 - MX 900 giri**	DX	65	38	8,5	3
620301	**MACAP MC7 - M7**	DX	75	42	9	3
620308	**MACAP M4D-M5D-M5D PLUS 1.400 giri**	DX	58	34	8,5	3
620306	**MACAP M7A900**	DX	75	42	9	3
620365	**MACAP MXK CONICHE FIORENZATO F63K**	DX	63	13c	23	3
620344	**MACAP M7K CONICHE**	DX	68	13c	25	4
702621	**MACAP MXD 75/900 TITANIO ORIGINAL**	DX	74	42	9,5	3
700110	**MACDOBAR**	DX	57	37	6	2
700108	**MACDOBAR**	DX	64	37	8,5	3
620305	**MAHLKÖNIG K30 12 DENT**	SX	65	38	8,5	2
620305/K	**MAHLKÖNIG K30 11/12 DENT**	SX	65	38	8,5	2
620305/11	**MAHLKÖNIG K110**	SX	65	38	8,5	2
620323	**MAHLKÖNIG EK43-EKK43**	SX	98	54	9	3
620379	**MAHLKÖNIG EK43-EKK43 ORIGINAL**	SX	98	54	9	3
620378	**MAZZER LUX MONOFASE**	DX	61	35	8,5	3
620358	**MAZZER MINI (dosatore) FIORENZATO M.C. F4 - COMPAK K3**	DX	58	33	8,5	3
620373	**MAZZER MINI (dosatore) ORIGINAL**	DX	58	33	8,5	3
620376	**MAZZER MINI ON DEMAND ORIGINAL**	DX	64	37	8,5	3
700108	**MAZZER JOLLY MONOFASE**	DX	64	37	8,5	3
700108/T	**MAZZER JOLLY ORIGINAL TRIFASE**	DX	64	37	8,5	3
700108/M	**MAZZER JOLLY ORIGINAL MONOFASE FOR DOSER AND ON DEMAND**	DX	64	37	8,5	3
700135	**MAZZER MAJOR**	DX	83	49	9	3
700135/T	**MAZZER MAJOR TRIFASE**	DX	83	49	9	3
700135/M	**MAZZER MAJOR ORIGINAL MONOF. FOR DOSER AND ON DEMAND**	DX	83	49	9	3
700135/TM	**MAZZER MAJOR ORIGINAL TRIFASE ROYAL MONOFASE**	DX	83	49	9	3
700132	**MAZZER MAYOR ORIGINAL TRIF. ROYAL MONOF. TITANIO**	DX	83	49	9	3

CODICE *code*	MACINACAFFE' *coffee grinder*	ROTAZIONE *rotation*	Ø *out*	Ø *in*	SPESSORE *thickness*	FORI *holes*
620362	**MAZZER ROBUR CONICHE TRIF.**	DX	83	14c	25	3
620375	**MAZZER ROBUR-KOLD ORIGINAL TRIF**	DX	83	14c	25	3
620363	**MAZZER ROBUR CONICHE MONOF.**	DX	71	14c	25	3
620372	**MAZZER ROBUR-KOLD ORIGINAL C. M.FOR DOSER AND ON DEMAND**	DX	71	14c	25	3
620371	**MAZZER KONY CONICHE MONOFASE**	DX	63	12c	23	3
620369	**MAZZER KONY ORIGINAL C. M. FOR DOSER AND ON DEMAND**	DX	63	12c	23	3
620370	**MAZZER KONY CONICHE TRIFASE ORIGINAL**	DX	67	14c	23	3
620341	**NUOVA SIMONELLI GRINTA**	DX	50	30	7,5	3
729000	**NUOVA SIMONELLI MYTHOS TITANIO ORIGINAL**	DX	75	38	9	3
620383	**NUOVA SIMONELLI MYTHOS TITANIO**	DX	75	38	9	3
620348	**OBEL JUNIOR**	SX	50	31	8	3
620345	**OBEL DSQ - EB**	SX	64	38	9	3
700103	**OBEL TRIFASE**	SX	64	38	9	3
700138	**QUAMAR**	DX	63	38	9	9
700128	**QUAMAR ON DEMAND**	DX	63	38	9,5	3
620348	**RANCILIO ROCKY-JACKY MD40**	SX	50	31	8	3
700103	**RANCILIO MD50**	SX	64	38	9	3
700140	**RANCILIO MD80**	SX	75	43	10,5	3
620343	**ROSSI**	SX	64	38	9	3
620344	**ROSSI CONICHE**	DX	68	13c	25	4
620353	**SAECO**	SX	43	25	7	3
620359	**SAECO CONICHE**	DX	40/48	10	20	-
620359/P	**SAECO CONICHE PERFORMANCE**	DX	40/48	10	20	-
620355	**SAN MARCO**	DX	64	37	8,5	3
620310	**SAN MARCO**	DX	74	42	9,5	3
700133/4	**SAN MARCO**	DX	84	46	9	3
620321	**SAN MARCO SEMICONICA MK-LK**	DX	84	46	9	3
620360	**SAN MARCO CONICHE**	DX	68	13c	25	4b

CODICE *code*	MACINACAFFE' *coffee grinder*	ROTAZIONE *rotation*	Ø *out*	Ø *in*	SPESSORE *thickness*	FORI *holes*
620346	**SANTOS**	SX	64	35	9	3
620377	**SANTOS ORIGINAL**	SX	64	35	9	3
620354	**WEGA - FIORENZATO**	SX	63	38	9	3
620356	**WEGA - COMPAK**	DX	64	38	9	3
620357	**WEGA - COMPAK**	DX	80	41	10	3
620307	**WEGA - COMPAK - OBEL CONICHE**	DX	68/49	13	25	4

CODICE *code*	MACINACAFFE' *coffee grinder*	ROTAZIONE *rotation*	Ø *out*	Ø *in*	SPESSORE *thickness*	FORI *holes*
	MACINE FOOD FRIENDLY					
633536	**CIMBALI-DRM-6S**	DX	64	37	9	3
633534	**FAEMA MC CONICHE-BNZ-CIMBALI CONIK**	DX	68	11	25	4
633538	**FAEMA MD 2000-3000**	DX	75	43	9	3
633531	**MACAP CONICHE MONOFASE**	DX	68	13c	25	4
633537	**MAZZER JOLLY MONOFASE**	DX	64	37	8,5	3
633530	**MAZZER KONY CONICHE MONOF.**	DX	63	12c	23	3
633540	**MAZZER MAJOR**	DX	83	49	9	3
633535	**MAZZER ROBUR C.M.**	DX	71	14c	25	3
633532	**RANCILIO**	SX	64	38	9	3
633541	**ROSSI/BRASILIA**	SX	64	38	9	3
633542	**OBEL DSQ-EB**	SX	64	38	9	3
633543	**WEGA-COMPAK**	DX	63	38	9	3
633544	**WEGA-COMPAK-OBEL CONICHE**	DX	68/49	13	25	4
	MACINE INDUSTRIALI					
620311	**CIAT**	DX	108	38	11	3
620311/13	**CIAT**	DX	108	38	13	3
620309	**CIAT mod MT4-VITTORIA mod MS9**	SX	123	45	12	3
620315	**DITTING mod KF/KFR 804**	SX	80	40	9	2
620316	**DITTING mod KF/KFA/KFR 903**	SX	90	45	9	2
620317	**DITTING mod KF/KFA/KFR 1203**	SX	120	60	9	4
620318	**DITTING mod KF/KFA/KFR 1403**	SX	140	70	9	4
620329	**PETRONCINI ORIGINAL mod S/2-10**	DX/SX	120	50	10	4

1



615899

Cono singolo super fine Inox EDO
Stainless steel single cone super fine EDO

615900

Cono singolo fine Inox EDO
Stainless steel single cone fine EDO



615901

Cono doppio Inox EDO

Double stainless steel cone EDO



620265

Tappetino angolare in gomma

Angular rubber tamper mat



620276

Bilancia Digitale con timer 130x190x28 mm

Digital scale with timer 130x190x28 mm



620844

Bilancia tascabile digitale EDO
123x72x20 mm

Digital pocket scale edo EDO
123x72x20 mm



620249

Battifondo incassato senza fondo EDO
Dimensioni 150,5x137x108,5 mm

Knock box built in bottomless EDO
Dimensions 150,5x137x108,5 mm



620266

Battifondo EDO con Fondo
Dimensioni 150,5x137x110 mm

Knock box EDO with bottom
Dimensions 150,5x137x110 mm



620266/N

Battifondo EDO nero opaco con Fondo
Dimensioni 150,5x137x110 mm

Matt Black knock box EDO with bottom
Dimensions 150,5x137x110 mm



622010

Barra gommata battifondo EDO ø 35x130 mm

Knock box Bar EDO ø 35x130 m



620277

Supporto pressa Caffè nero EDO

Coffee tamper support black EDO



620896

Panno barista EDO 40x30 cm
C/MOSCHETTONE

Barista towel EDO 40x30 cm WITH CLIP



620843

Panno barista EDO 40x30 cm MARRONE

Barista towel EDO pack 40x30 cm BROWN



620898

Panno barista EDO 40x30 cm AZZURRO

Barista towel EDO pack 40x30 cm LIGHT BLUE



620899

Panno barista EDO 40x30 cm GRIGIO

Barista towel EDO pack 40x30 cm GREY



620915

Grembiule EDO 93x67 cm

Apron EDO 93x67 cm



620230
Lattiera inox - 350 ml/12 oz
Stainless steel milk pitcher - 350 ml/12 oz

620231
Lattiera inox - 600 ml/20 oz
Stainless steel milk pitcher - 600 ml/20 oz

620232
Lattiera inox - 1000 ml/33 oz
Stainless steel milk pitcher - 1000 ml/33 oz



620267
Lattiera inox baby pink- 350 ml/12 oz
Baby pink stainless steel milk pitcher - 350ml/12 oz

620271
Lattiera inox baby pink- 600 ml/20 oz
Baby pink stainless steel milk pitcher - 600ml/20 oz



620268
Lattiera inox apple green-350ml/12 oz
Apple green stainless steel milk pitcher - 350 ml/12 oz

620272
Lattiera inox apple green-600ml/20 oz
Apple green stainless steel milk pitcher - 600 ml/20 oz



620269
Lattiera inox red - 350 ml/12 oz
Red stainless steel milk pitcher - 350 ml/12 oz

620273
Lattiera inox red - 600 ml/20 oz
Red stainless steel milk pitcher - 600 ml/20 oz



620270
Lattiera inox tiffany blue- 350ml/12 oz
Tiffany blue stainless steel milk pitcher - 350 ml/12 oz

620274
Lattiera inox tiffany blue- 600ml/20 oz
Tiffany blue stainless steel milk pitcher - 600 ml/20 oz



620297
Lattiera inox white- 350 ml/12 oz
White stainless steel milk pitcher - 350 ml/12 oz
620299
Lattiera inox white - 600 ml/20 oz
White stainless steel milk pitcher - 600 ml/20 oz



620296
Lattiera inox black- 350 ml/12 oz
Black stainless steel milk pitcher - 350 ml/12 oz
620298
Lattiera inox black - 600 ml/20 oz
Black stainless steel milk pitcher - 600 ml/20 oz



620179
Lattiera inox graduata - 350 ml/12 oz
Lined stainless steel milk pitcher - 350 ml/12 oz
620180
Lattiera inox graduata - 600 ml/20 oz
Lined stainless steel milk pitcher - 600 ml/20 oz
620181
Lattiera inox graduata - 1000ml/33 oz
Lined stainless steel milk pitcher - 1000 ml/33 oz



620185
Lattiera inox con rivestimento in teflon nero - 350 ml/12 oz
Black teflon coated stainless steel milk pitch - 350 ml/12 oz
620186
Lattiera inox con rivestimento in teflon nero - 600ml/12 oz
Black teflon coated stainless steel milk pitch - 600 ml/12 oz
620187
Lattiera inox con rivestimento in teflon nero - 800ml/12 oz
Black teflon coated stainless steel milk pitch - 800ml/12 oz
620188
Lattiera inox con rivestimento in teflon nero - 1000ml/12 oz
Black teflon coated stainless steel milk pitch - 1000ml/12 oz



620969
Punteruolo per latte Art Ø 3 mm - L.140 mm
Latte Art tool Ø 3 mm - L.140 mm



620842
Tazza da cupping professionale
Professional cupping cup



620293

Set Caffè EDO Linea UZU Blu

Coffee Set EDO UZU Line Blue



620294

Set Caffè EDO Linea UZU Rosa

Coffee Set EDO UZU Line Rose



620295

Set Caffè EDO Linea UZU Azzurra

Coffee Set EDO UZU Line Light Blue



620325

Set Caffè EDO Linea UZU Verde

Coffee Set EDO UZU Line Green



Pressino 'Style' legno/inox
Prodotto da Nuova Ricambi.

'Style' Wodden-stainless steel tamper
Made by Nuova Ricambi

620446 ø 49mm
620447 ø 50mm
620448 ø 51mm
620800 ø 54mm
620867 ø 58mm
620868 ø 53mm

Pressino 'Style' legno/inox con base convessa soft.
Prodotto da Nuova Ricambi.

'Style' Wodden-stainless steel tamper with soft convex base
Made by Nuova Ricambi.

620872 ø 57.5mm
620873 ø 53mm



Pressino dinamometrico regolabile lucido
Prodotto da Nuova Ricambi.
Ideale per una costante pressione sul caffè macinato.
Pressione regolabile 11-14 kg.
Permette l'uso di una macinatura più grossa che riscalda meno il caffè e limita l'usura delle macine.

Adjustable polished stainless steel dynamometric tamper
Made by Nuova Ricambi. Ideal for a constant pressure on ground coffee. Adjustable pressure 11-14 kg. It allows the use of coarser ground coffee, resulting in the coffee heating up less and the burrs lasting longer.

Disco Alluminio / *Aluminium Disc*

620870 ø 58mm
620870/C ø 58,3mm
620871 ø 53mm

Disco Acciaio Inox / *Stainless Steel Disc*

620874 ø 58mm
620875 ø 53mm



Pressino 'Competizione' legno/inox
Prodotto da Nuova Ricambi.

'Competizione' Wodden-stainless steel tamper
Made by Nuova Ricambi.

620801 ø 49mm
620802 ø 50mm
620803 ø 51mm
620804 ø 54mm
620890 ø 53mm
620891 ø 57,5mm
620892 ø 58,3mm
620893 ø 58,5mm

Pressino 'Style' legno/inox con base convessa soft.
Prodotto da Nuova Ricambi.

'Style' Wodden-stainless steel tamper with soft convex base
Made by Nuova Ricambi.

620805 ø 52,5mm
620806 ø 57,5mm



Pressino EDO YOUNG PRO Rosso

Red EDO Tamper YOUNG PRO

620830 Ø58
620830/49 Ø49
620830/50 Ø50
620830/51 Ø51
620830/53 Ø53
620830/54 Ø54

Pressino EDO YOUNG PRO Rosso con base convessa

Red EDO Tamper YOUNG PRO with convex base

620892 Ø58
620894 Ø53



Pressino EDO YOUNG PRO Nero

Black EDO Tamper YOUNG PRO

620831 Ø58
620831/49 Ø49
620831/50 Ø50
620831/51 Ø51
620831/53 Ø53
620831/54 Ø54

Pressino EDO YOUNG PRO Nero con base convessa

Black EDO Tamper YOUNG PRO with convex base

620893 Ø58
620895 Ø53



Pressino EDO LINEA YOUNG Nero

Black EDO Tamper YOUNG LINE

620835 ø 58
620835/49 Ø49
620835/50 Ø50
620835/51 Ø51
620835/53 Ø53
620835/54 Ø54

Pressino EDO LINEA YOUNG Nero con base convessa

Black EDO Tamper YOUNG LINE with convex base

620970 Ø58
620976 Ø53



Pressino EDO LINEA YOUNG Rosso

Red EDO Tamper YOUNG LINE

620836 ø 58
620836/49 Ø49
620836/50 Ø50
620836/51 Ø51
620836/53 Ø53
620836/54 Ø54

Pressino EDO LINEA YOUNG Rosso con base convessa

Red EDO Tamper YOUNG LINE with convex base

620970 Ø58
620976 Ø53



Pressino EDO LINEA YOUNG Rosa

Pink EDO Tamper YOUNG LINE

620837 Ø58
620837/49 Ø49
620837/50 Ø50
620837/51 Ø51
620837/53 Ø53
620837/54 Ø54

Pressino EDO LINEA YOUNG Rosa con base convessa

Pink EDO Tamper YOUNG LINE with convex base

620972 Ø58
620978 Ø53



Pressino EDO LINEA YOUNG Verde

Green EDO Tamper YOUNG LINE

620838 Ø58
620838/49 Ø49
620838/50 Ø50
620838/51 Ø51
620838/53 Ø53
620838/54 Ø54

Pressino EDO LINEA YOUNG Vedre con base convessa

Green EDO Tamper YOUNG LINE with convex base

620973 Ø58
620979 Ø53



Pressino EDO LINEA YOUNG Blue

Blue EDO Tamper YOUNG LINE

620839 Ø58
620839/49 Ø49
620839/50 Ø50
620839/51 Ø51
620839/53 Ø53
620839/54 Ø54

Pressino EDO LINEA YOUNG Blue con base convessa

Blue EDO Tamper YOUNG LINE with convex base

620974 Ø58
620980 Ø53



Pressino EDO LINEA YOUNG Bianco

White EDO Tamper YOUNG LINE

620840 Ø58
620840/49 Ø49
620840/50 Ø50
620840/51 Ø51
620840/53 Ø53
620840/54 Ø54

Pressino EDO LINEA YOUNG Blue con base convessa

Blue EDO Tamper YOUNG LINE with convex base

620975 Ø58
620981 Ø53



620287

Accessorio distrib. caffé "TWISTER" nero

Coffee distrib. accessory "TWISTER" black



620288

Accessorio distrib. caffé "TWISTER" rosso

Coffee distrib. accessory "TWISTER" red



620289

Accessorio distrib. caffé "TWISTER" grigio

Coffee distrib. accessory "TWISTER" grey



620290

Accessorio distrib. caffé "TWISTER" verde

Coffee distrib. accessory "TWISTER" green



620291

Accessorio distrib. caffé "TWISTER" rosa

Coffee distrib. accessory "TWISTER" pink



620327

Accessorio distrib. caffé "TWISTER" blu

Coffee distrib. accessory "TWISTER" blue



620326

Wormhole Nero

Black Wormhole



620326/B

Wormhole Blu

Blue Wormhole



620326/R

Wormhole R osso

Red Wormhole

– Per macchine: Astoria , Bezzera , Carimali , Conti , Dalla Corte , ECM , Expobar , Faema , Kees Van Der Western , La Marzocco , La Pavoni , La Spaziale , Rancilio , Rocket , San Marco , Vibiemme , Wega.

– Suitable for use with machines: Astoria , Bezzera , Carimali , Conti , Dalla Corte , ECM , Expobar , Faema Kees Van Der Western , La Marzocco , La Pavoni , La Spaziale , Rancilio , Rocket , San Marco , Vibiemme , Wega.



620278

Foam Locus 0,4 L

Foam Locus 0,4 L



620279

Foam Locus 0,6 L

Foam Locus 0,6 L



620280

Foam Locus 1 L

Foam Locus 1 L



620281

Foam Locus Essential set
0,6 L - 0,6 L - 1 L

Foam Locus Essential set
0,6 L - 0,6 L - 1 L



620282

Foam Locus Essential
Temp. Set.
0,4 L - 0,6 L - 1 L

Foam Locus Essential
Temp. Set.
0,4 L - 0,6 L - 1 L



620283

Foam Locus Stickers

Foam Locus Stickers

Foro stretto – Per macchine: Astoria , Carimali , Conti , Dalla Corte , ECM , Expobar , Kees Van Der Western La Marzocco , Nuova Simonelli , Rancilio , Rancilio Silvia 1 , San Remo , Synesso , Victoria Arduino.

Foro largo – Per macchine: Bezzera , Cimbali , Faema , La Pavoni , La Spaziale , Rocket , San Marco , Vibiemme , Wega.

Narrow hole *– Suitable for use with machines: Astoria , Carimali , Conti , Dalla Corte , ECM , Expobar , Kees Van Der Western , La Marzocco , Nuova Simonelli , Rancilio , Rancilio Silvia 1 , San Remo , Synesso , Victoria Arduino.*

Wide hole *– Suitable for use with machines: Bezzera , Cimbali , Faema , La Pavoni , La Spaziale , Rocket , San Marco Vibiemme , Wega.*



620336/N

Foam Locus Prime 350 ml Foro Stretto

Foam Locus Prime 350 ml Narrow Hole

620336/W

Foam Locus Prime 350 ml Foro Largo

Foam Locus Prime 350 ml Wide Hole



620337/N

Foam Locus Prime 600 ml Foro Stretto

Foam Locus Prime 600 ml Narrow Hole

620337/W

Foam Locus Prime 600 ml Foro Largo

Foam Locus Prime 600 ml Wide Hole



620338/N

Foam Locus Prime 900 ml Foro Stretto

Foam Locus Prime 900 ml Narrow Hole

620338/W

Foam Locus Prime 900 ml Foro Largo

Foam Locus Prime 900 ml Wide Hole



620334

Foam Locus Spare Indicator Rings

Foam Locus Spare Indicator Rings



617938/A
Manopola acero portafiltro M10
Handle maple filterholder M10

700317/A
Manopola acero portafiltro M12
Filter holder handle maple wood M12



617938/N
Manopola noce canaletto portafilto M10
Handle walnut filterholder M10

700317/N
Manopola noce canaletto portafilto M12
Filter holder knob walnut M12



617938/U
Manopola ulivo portafiltro M10
Handle olive filterholder M10

700317/U
Manopola ulivo portafiltro M12
Filter holder handle olive wood M12



632316/A
Manopola portafiltro NR M10 acero
Maple filterholder handle NR M10

632317/A
Manopola portafiltro NR M12 acero
Maple filterholder handle NR M12



632316/N
Manopola portafiltro NR M10 noce
Walnut filterholder handle NR M10

632317/N
Manopola portafiltro NR M12 noce
Walnut filterholder handle NR M12



632316/U
Manopola portafiltro NR M10 ulivo
Olive filterholder handle NR M10

632317/U
Manopola portafiltro NR M12 ulivo
Olive filterholder handle NR M12



620284

Manopola Vapore Noce Canaletto

Nut Wood Steam Knob Canaletto



620285

Tappo Cromato per manopola vapore Noce

Chromed plug for nut wood steam Knob



620286

Manopola levetta gruppo e rubinetto acqua Noce Canaleto

Group and tap lever knob Nut wood Canaletto



620825
Collana chicchi caffè

Coffee beans brown necklace



620819
Portachiavi set barista NR

Barista set NR keychain



620826
Spilla chicchi caffè

Coffee beans brown brooch pin



620820
Portachiavi lattiera Edo chrome

Edo milk pitcher chrome keychain



620827
Spilla coffee dripper rossa

Coffee dripper red brooch pin



620821
Portachiavi lattiera Edo pink

Edo milk pitcher pink keychain



620828
Spilla tazzine baby pink

Cup brooch pin baby pink



620822
Portachiavi lattiera Edo green

Edo milk pitcher green keychain



620829
Spilla tazzine tiffany blue

Cup brooch pin tiffany blue



620823
Portachiavi lattiera Edo red

Edo milk pitcher red keychain



620841
Borsa tracolla Edo

Edo shoulder bag



620824
Portachiavi lattiera Edo tiffany blue

Edo milk pitcher tiffany blue keychain



Portafiltro 2 tazze con manopola legno acero NR M12 attacco beccucci 3/8 con molla e filtro

Filterholder 2 cups with maple wood handle NR M12 spout connection 3/8 with spring e filter

624000/A	Aurora , Bfc , Ecm , Elektra Futurmat - Ariete , La Scala La Marzocco , Sanremo Sv Italia , Vibiemme , Wega
624100/A	Faema
624200/A	Gaggia
624300/A	Nuova simonelli
624400/A	Rancilio
624500/A	Cimbali
624600/A	Astoria , Brasilia , Bezzera
624700/A	Dalla corte
624800/A	Pavoni Europiccola
624900/A	Astoria P4Y



Portafiltro 2 tazze con manopola legno noce NR M12 attacco beccucci 3/8 con molla e filtro

Filterholder 2 cups with walnut wood handle NR M12 spout connection 3/8 with spring e filter

624000/N	Aurora , Bfc , Ecm , Elektra Futurmat - Ariete , La Scala La Marzocco , Sanremo Sv Italia , Vibiemme , Wega
624100/N	Faema
624200/N	Gaggia
624300/N	Nuova simonelli
624400/N	Rancilio
624500/N	Cimbali
624600/N	Astoria , Brasilia , Bezzera
624700/N	Dalla corte
624800/N	Pavoni Europiccola
624900/N	Astoria P4Y



Portafiltro 2 tazze con manopola legno ulivo NR M12 attacco beccucci 3/8 con molla e filtro

Filterholder 2 cups with olive wood handle NR M12 spout connection 3/8 with spring e filter

624000/U	Aurora , Bfc , Ecm , Elektra Futurmat - Ariete , La Scala La Marzocco , Sanremo Sv Italia , Vibiemme , Wega
624100/U	Faema
624200/U	Gaggia
624300/U	Nuova simonelli
624400/U	Rancilio
624500/U	Cimbali
624600/U	Astoria , Brasilia , Bezzera
624700/U	Dalla corte
624800/U	Pavoni Europiccola
624900/U	Astoria P4Y



Portafiltro 2 tazze con manopola legno acero
M12 attacco beccucci 3/8 con molla e filtro

Filterholder 2 cups with maple wood handle M12 spout connection 3/8 with spring e filter

624001/A	Aurora , Bfc , Ecm , Elektra Futurmat - Ariete , La Scala La Marzocco , Sanremo Sv Italia , Vibiemme , Wega
624101/A	Faema
624201/A	Gaggia
624301/A	Nuova simonelli
624401/A	Rancilio
624501/A	Cimbali
624601/A	Astoria - Brasilia - Bezzera
624701/A	Dalla corte
624801/A	Pavoni Europiccola
624901/A	Astoria P4Y



Portafiltro 2 tazze con manopola legno noce
M12 attacco beccucci 3/8 con molla e filtro

Filterholder 2 cups with walnut wood handle M12 spout connection 3/8 with spring e filter

624001/N	Aurora , Bfc , Ecm , Elektra Futurmat - Ariete , La Scala La Marzocco , Sanremo Sv Italia , Vibiemme , Wega
624101/N	Faema
624201/N	Gaggia
624301/N	Nuova simonelli
624401/N	Rancilio
624501/N	Cimbali
624601/N	Astoria , Brasilia , Bezzera
624701/N	Dalla corte
624801/N	Pavoni Europiccola
624901/N	Astoria P4Y



Portafiltro 2 tazze con manopola legno ulivo
M12 attacco beccucci 3/8 con molla e filtro

Filterholder 2 cups with olive wood handle M12 spout connection 3/8 with spring e filter

624001/U	Aurora , Bfc , Ecm , Elektra Futurmat - Ariete , La Scala La Marzocco , Sanremo , Sv Italia , Vibiemme , Wega
624101/U	Faema
624201/U	Gaggia
624301/U	Nuova simonelli
624401/U	Rancilio
624501/U	Cimbali
624601/U	Astoria , Brasilia , Bezzera
624701/U	Dalla corte
624801/U	Pavoni Europiccola
624901/U	Astoria P4Y



615751
Pressino legno/acciaio
Espresso FLAT 58 mm

Rubber/wood tamper
Espresso FLAT 58 mm

615752
Pressino legno/acciaio
Espresso Convex 58 mm

Wood/S.Steel tamper
Espresso Convex 58 mm



615702
Pressino opaco XT 58mm

XT 58 mm Tamper cast finish handle



615701
Pressino lucido XT 58mm

XT 58 mm Tamper mirror finish handle



615753
Pressino legnonoce/acciaio
Espresso Flat 58 mm

Nut wooden/S.Steel tamper
Espresso Flat 58 mm

615754
Pressino legnonoce/acciaio
Espresso Convex 58 mm

Nut wooden/S.Steel tamper
Espresso Convex 58 mm



615755
Pressino alluminio/acciaio
Espresso Flat 58 mm

Alluminium/S.Steel tamper
Espresso Flat 58 mm

615756
Pressino alluminio/acciaio
Espresso Convex 58 mm

Alluminium/S.Steel tamper
Espresso Convex 58 mm



615760
Portapressino
U.f.o. gomma

Rubber tamper seat U.f.o.



615778
Lattiera Cafelat 0,75 Lt.

Milk Pitcher Cafelat 0,75 Lt.



615759
Supporto a specchio

Mirror stamp stand



615768
Tappetino

Tamper mat



615765
Spazzolino guarnizione gruppo

Group gasket brush



615772
Tappetino angolare

Corner tamper mat



615774
Ricambi Spazzolini (3)

Spare cleaning brush (3)



615769
Tappetino Splat Nero

Black splat tamper mat



615777
Anello ottone Gruppo Leva Gaggia

Brass ring level Group Gaggia



615766
Battifondo Tubbi
Nero h.13 cm

Black knock box
Tubbi h.13 cm

615767
Battifondo Tubbi
Rosso h.13 cm

Red knock box
Tubbi h. 13cm

615773
Battifondo Large Tubbi
Nero h. 15 cm

Black knock box Large
Tubbi h. 15 cm



615771
Set Panno Microfibra
Barista (4Pz.)

Cleaning cloth
set Barista (4Pcs.)



615779
Barra per battifondo
Tubbi 615766-615767
L.15 cm

Bar for knock box
Tubbi 615766-615767
L.15 cm



615775
Barra per battifondo
Large Tubbi 615773
L.18,5 cm

Bar for knock box
Large Tubbi 615773
L.18,5 cm



615776
Battifondo Inox
Caffè

Stainless steel Cafè
knock box

Guarnizioni Silicone • Silicon Gaskets



Per / *For*: BFC - ECM - Expobar - Faema - Futurmat - La Pavoni - Promac - Quality - RST - Sanremo - Vibiemme - Wega

516525
Guarnizione portafiltro
8 mm rossa

Red portafilter gasket 8 mm



516526
Guarnizione portafiltro
8,5 mm blu

Blue portafilter gasket 8,5 mm



Per / For: Rancilio

516524
Guarnizione portafiltro
8,4 mm green

Green portafilter gasket 8,4 mm



Per / For: Cimbali - Nuova Simonelli - Victoria Arduino

516522
Guarnizione portafiltro
8,3 mm rossa

Red portafilter gasket 8,3 mm



516523
Guarnizione portafiltro
9 mm blu

Blue portafilter gasket 9 mm



Per / For: La Marzocco

516527
Guarnizione portafiltro
8,2 mm blu

Blue portafilter gasket 8,2 mm



Per / For: La Spaziale

516530
Guarnizione portafiltro
6,3 mm rossa

Red portafilter gasket 6,3 mm



Per / For: Astoria CMA - Brasilia - Elektra

516531
Guarnizione portafiltro
6 mm blue

Blue portafilter gasket 6 mm



Per / For: La Pavoni Europiccola

516529
Guarnizione a labbro
5,5 mm blu

Blue lip gasket 5,5 mm

Guarnizioni Silicone • Silicon Gaskets



Per / For: Astoria CMA / Brasilia

516532
Guarnizione a labbro per pistone gruppo leva 6,75 mm rossa

Red lip gasket for group lever piston 6,75 mm



591675
Bustina grasso alimentare "Molykote 111 compound" gr.6 "NSF"

Grease"Molykote 111 compound" packet 6gr. "NSF"



Per / For: Astoria CMA / Brasilia

516540
Kit manutenzione ordinaria gruppo leva

Ordinary maintenance kit for lever group



615748

Macchina caffè robot manuale " Barista "

Il robot è una piccola caffettiera manuale di alta qualità che produce un vero espresso. Utilizza poche parti, nessuna elettronica complicata e solo materiali di prima qualità come l'acciaio inossidabile: è completamente privo di plastica. Tutto ciò che serve è un caffè macinato, un po 'd'acqua calda da un bollitore e il gioco è fatto. L'intero processo è semplice e richiede solo pochi minuti.
Questa versione ha un sistema di misurazione con manometro che identifica la pressione effettiva all'interno del cestello durante l'estrazione.

Manual robot coffee machine " Barista "

The Robot is a small, high-quality manual coffee maker that makes real espresso. It uses a few parts, no complicated electronics and only premium materials like stainless steel - it is completely plastic free. All you need is ground coffee, some hot water from a kettle and you are all set. The whole process is simple and takes just a few minutes.
This version has a pressure gauge system which measures the actual pressure inside the basket during extraction.



615749

Macchina caffè robot manuale " Regular "

Il robot è una piccola caffettiera manuale di alta qualità che produce un vero espresso. Utilizza poche parti, nessuna elettronica complicata e solo materiali di prima qualità come l'acciaio inossidabile: è completamente privo di plastica. Tutto ciò che serve è un caffè macinato, un po 'd'acqua calda da un bollitore e il gioco è fatto. L'intero processo è semplice e richiede solo pochi minuti.

Manual robot coffee machine " Regular "

The Robot is a small, high-quality manual coffee maker that makes real espresso. It uses a few parts, no complicated electronics and only premium materials like stainless steel - it is completely plastic free. All you need is ground coffee, some hot water from a kettle and you are all set. The whole process is simple and takes just a few minutes.



615796

Pressino Push Nero

Push Tamper Black



615797

Pressino Push Blu

Push Tamper Blue



615798

Pressino Push Verde

Push Tamper Green



615799

Pressino Push Rosa

Push Tamper Pink



615789

Pressino Push Rosso

Push Tamper Red



615788

Pressino Push Nero ø53 mm

Push Tamper Black ø53 mm



620879 Pressino Nero 53mm *Black Tamper*



620878/N Pressino Nero 58mm *Black Tamper*



620881/N Spargicacao Nero Fori Fini
Black Fine Mesh Cocoa Shaker
620881/R Spargicacao Rosso Fori Fini
Red Fine Mesh Cocoa Shaker
620881/S Spargicacao Silver Fori Fini
Silver Fine Mesh Cocoa Shaker



620845 Latte ID Clip "SOY" (2pz.)
Milk ID Clip "SOY" (2pcs.)
620846 Latte ID Clip "ALMID" (2pz.)
Milk ID Clip "ALMID" (2pcs.)
620847 Latte ID Clip "L.FREE" (2pz.)
Milk ID Clip "L.FREE" (2pcs.)
620848 Latte ID Clip "LIGHT" (2pz.)
Milk ID Clip "LIGHT" (2pcs.)
620849 Latte ID Clip "FULL" (2pz.)
Milk ID Clip "FULL" (2pcs)



620882/N Spazzolino Lungo Nero
Black Long Group Brush



620883 Tappetino per Pressare
Tamper Mat



620885 Tappetino Professional per pressare
Professional Tamper Mat



620886 "The Big Barista" Battifondo
"The Big Barista" knock box



620886/F Base "The Big Barista" Battifondo
Base"The Big Barista" Knock box



620889 Barra battifondo "The Big Barista"
Knock Box Bar "The Big Barista"



620876/N Battifondo Nero H/175mm
Black Knock Tube H/175mm
620876/R Battifondo Rosso H/175mm
Red Knock Tube H/175mm
620876/S Battifondo Silver H/175mm
Silver *Knock Tube H/175mm*



620877/N Battifondo Nero H/110mm
Black Knock Tube H/110mm
620877/R Battifondo Rosso H/110mm
Red Knock Tube H/110mm
620877/S Battifondo Silver H/110mm
Silver *Knock Tube H/110mm*



620888 Barra battifondo
Knock Box Bar



620897 Professional Kit Barista Nero
Professional Kit Barista Black
620897/G Professional Kit Barista Grigio
Professional Kit Barista Dark grey
620897/R Professional Kit Barista Rosso
Professional Kit Barista Red



615801

Coffee Dripper V060 01
Plastica Bianca

Coffee dripper V060 01
White Plastic



615825

Coffee Dripper V060 02
Plastica Bianca

Coffee dripper V060 02
White Plastic



615802

Coffee Dripper
V60 02 Ceramica

Coffee Dripper
V60 02 Ceramic



615816

Coffee Dripper V60 02
Rosso Ceramic

Red Ceramic Coffe
Dripper V60 02



615815

Professional Dripper

Professional Dripper



615818

New Syphon

New Syphon



615809

One Cup Cafeor 200ml

One Cup Cafeor 200ml



615819

Aeropress

Aeropress



615810

Coldbrew

Coldbrew



615822

Coffee Server
VCS-OIB V60 450ml.

Coffee Server
VCS-OIB V60 450ml.



615811

Ranger Server 360ml

Ranger server 360ml



615812

Ranger Server 600ml

Ranger Server 600ml



615803

Drip Decanter V60
"Buono"

V60 Coffee Drip Kettle
"Buono"



615820

Elettric Buono Kettle
240V-50HZ EVKB-80E-HSV

Elettric Buono Kettle
240V-50HZ EVKB-80E-HSV



615823

Macinino a Mano
Ceramica Mini Slim

Handgrinder Ceramic
Mini Slim



615826

Macinino a Mano
Ceramica Coffee Mill
Skerton

Ceramic Handgrinder
Coffee Mill *Skerton*



615804

Filtri Carta Bianchi per Dripper 01 (40pz)

Paper Filter White for Dripper 01 (40 pcs)



615805

Filtri Carta Bianchi per Dripper 02 (40pz)

Paper Filter White for Dripper 02 (40 pcs)



615813

Filtri Carta Bianchi per Dripper 01 (100 pz)

Paper Filter White for Dripper 01 (100 pcs)



615814

Filtri Carta Bianchi per Dripper 02 (100 pz)

Paper Filter White for Dripper 02 (100 pcs)



615817

Filtri Stoffa per Professional Dripper

Cloth Filters for Professional Dripper



615821

Single Stand VSS-1-OV V60

Single Stand VSS-1-OV V60



615808

Bilancia per V60 con Timer fino a 2kg

Drip Scale for V60 With Timer



615824

Filtri Carta Aeropress 350 pz

Paper Filters Aeropress 350 pc



615830

Coffee Brewer Samantha

Samantha è la prima macchina da caffè del suo genere. E' in grado di impostare la temperatura ideale, erogare il caffè a diverse velocità, intervalli e volumi, tutto completamente controllabile con lo smartphone.
Puoi caricare le tue ricette preferite nell'app o salvare le tue miscele sperimentali e fare poi in modo che Samantha le ripeta ogni volta che vuoi, alla perfezione.
Per qualsiasi dubbio, sfoglia l'app per trovare le ricette condivise dai brewers di tutto il mondo o carica le tue per condividerle.
In alternativa, per un'estrazione senza grandi pretese, basta riempire il contenitore d'acqua, scegliere tra le ricette preimpostate di Samantha e in pochissimo tempo una bella tazza di caffè ti aspetta.
Realizzare la tazza perfetta di V60 non è mai stato così facile.

Coffee Brewer Samantha

Samantha is first of its kind that can set your ideal temperature, brew at different pour rates, intervals and volumes, fully controllable with your smartphone.
Load up your favourite recipes in the app, or save your experimental brews and have Samantha replicate it every time to perfection.
When in doubt, browse through the app for recipes shared by brewers all over the world, or upload yours to share the goodness.
Alternatively, for fuss-free brewing, simply fill up the water chamber, choose from Samantha's pre-set recipes and a fresh cup awaits you in no time.
Making the perfect cup of V60 has never been easier.

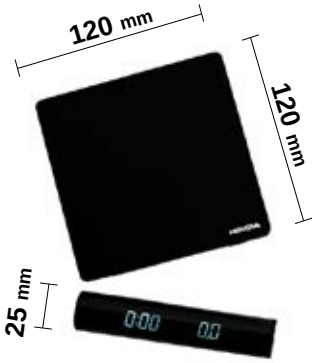

615831

Bilancia jimmy

La nuova bilancia intelligente all-in-one perfetta sia per l'espresso che per i pour-over.
Puoi decidere di staccare il display, che è magnetico, e puoi attaccarlo dove preferisci. Puoi monitorare la bilancia lontano dalla macchina.
Con il miglior hardware di qualsiasi bilancia sul mercato e con un processore a 32 Bit, Jimmy ti permette di lavorare con nuove funzioni avanzate. Perfezione nella sensibilità e reattività tra le sue caratteristiche. Jimmy è resistente all'acqua e ha una durata di 10 ore in uso continuo e 1000 ore in standby.
Super automatica, puoi personalizzare le modalità di utilizzo rendendo un'estrazione un'esperienza unica e perfetta, senza interruzioni grazie all' avvio automatico del timer e al rilevamento automatico della tara.
Collega il tuo iPhone, Apple Watch (in arrivo anche per Android) con Jimmy!
Tira fuori il genio del caffè che è in te: le App IOS e Android (in arrivo) ti permetteranno di misurare la tua estrazione in tempo reale e con precisione e di guidarti così verso la perfezione. Jimmy registrerà automaticamente i dati storici di tutti i tuoi caffè/pour-over. Capire il tuo caffè e ottenere una fantastica estrazione e resa in tazza non è mai stato così semplice!

Scale jimmy

The new all-in-one smart scale is perfect for both espresso and pour-overs.
You can decide to detach the display, which is magnetic, and you can attach it wherever you want. You are now able to monitor the scale away from the machine.
With the best hardware of any scale on the market and with a 32-Bit processor, Jimmy allows you to work with new advanced features. Among its features there are excellent sensitivity and responsiveness. Jimmy is water resistant and has a duration of up to 10 hours of detached usage and 1000 hours of standby time.
Super automatic, you can customize the modes of use by making an extraction a unique and perfect experience, without interruptions thanks to the auto-tare and auto start timer.
Connect Jimmy with your iPhone, Apple Watch (coming also for Android)!
Bring out the coffee geek in you: the IOS and Android (coming soon) Apps will allow you to measure your extraction in real time and with precision and to guide you towards perfection.
Jimmy will automatically record the historical data of all your espresso shot and pour-overs.
Understanding your coffee and achieving consistency for the best cup has never been easier!



615832

Peso di calibrazione
Bilancia 100g AISI 304

Scale calibration
Weight 100g AISI 304



615836

Pad protettivo in
Silicone per Hiroia Jimmy

Silicone protective Pad
for Hiroia Jimmy



615837

Custodia per Hiroia
Jimmy in Pelle Sintetica

Synthetic Leather Case
for Hiroia Jimmy



615838

Set Accessori Hiroia
Jimmy

Accessory Set Hiroia
Jimmy



615839

Supporto Portafiltro
Hiroia Jimmy

Portafilter Support
Hiroia Jimmy



200317
Tazzina Caffè Milano
Bianca in Porcellana

White Porcelain Coffee Cup Milano



200303
Piattino Caffè
MI/Ischia/GE/AO
Nero in Porcellana

Black Porcelain Coffee Saucer MI/Ischia/GE/AO



200329
Tazzina Caffè Genova
Bianca in Porcellana

White Porcelain Coffee Cup Genova



200319
Tazzina Caffè Milano
Rossa in Porcellana

Red Porcelain Coffee Cup Milano



200306
Tazzina Caffè Ischia
Bianca in Porcellana

White Porcelain Coffee Cup Ischia



200325
Tazzina Caffè Genova
Rossa in Porcellana

Red Porcelain Coffee Cup Genova



200335
Piattino Caffè
MI/Ischia/GE/AO
Bianco in Porcellana

White Porcelain Coffee Saucer MI/Ischia/GE/AO



200320
Piattino Caffè
MI/Ischia/GE/AO
Rosso in Porcellana

Red Porcelain Coffee Saucer MI/Ischia/GE/AO



200302
Tazzina Caffè Milano
Nera in Porcellana

Black Porcelain Coffee Saucer Milano



200321
Tazzina Caffè Genova
Nera in Porcellana

Black Porcelain Coffee Saucer Genova



200336
Tazza Cappuccino Milano
Bianca in Porcellana

White Porcelain
Cappuccino Cup Milano



200313
Tazza Cappuccino Milano
Rossa in Porcellana

Cappuccino Cup
Milano Red Porcelain



200308
Tazza Cappuccino Genova
Bianca in Porcellana

White Porcelain
Cappuccino Cup Genova



200312
Tazza Cappuccino Genova
Rossa in Porcellana

Red Porcelain
Cappuccino Cup Genova



200318
Piattino Cappuccino
MI/Ischia/GE/AO
Bianco in Porcellana

White Porcelain
Cappuccino Saucer
MI/Ischia/GE/AO



200310
Tazza Cappuccino Aosta
Rossa in Porcellana

Red Porcelain
Cappuccino Cup Aosta



200315
Tazza Cappuccino Genova
Nera in Porcellana

Black Porcelain
Cappuccino Cup Genova



200314
Piattino Cappuccino
MI/Ischia/GE/AO
Rosso in Porcellana

Red Porcelain
Cappuccino Saucer
MI/Ischia/GE/AO



200300
Tazza Cappuccino Milano
Nera in Porcellana

Black Porcelain
Cappuccino Cup Milano



200301
Piattino Cappuccino
MI/Ischia/GE/AO
Nero in Porcellana

White Porcelain
Cappuccino Saucer
MI/Ischia/GE/AO



200337
Tazza Colazione Milano
Bianca in Porcellana

White Porcelain
Breakfast Cup Milano



200331
Tazza Colazione Genova
Bianca in Porcellana

White Porcelain
Breakfast Cup Genova



200338
Piattino Colazione
Ml/Ischia/GE/AO
Bianco In Porcellana

White Porcelain
Breakfast Saucer
Ml/Ischia/GE/AO



200304
Tazza Colazione Milano
Nera in Porcellana

Black Porcelain
Breakfast Cup Milano



200323
Tazza Colazione Genova
Nera in Porcellana

Black Porcelain
Breakfast Cup Genova



200324
Piattino Colazione
Ml/Ischia/GE/AO
Nero in Porcellana

Black Porcelain
Breakfast Saucer
Ml/Ischia/GE/AO



200333
Tazza Colazione Milano
Rossa in Porcellana

Red Porcelain
Breakfast Cup Milano



200334
Piattino Colazione
Ml/Ischia/GE/AO
Rosso in Porcellana

Red Porcelain
Breakfast Saucer
Ml/Ischia/GE/AO



700045
Zuccheriera Inox

Stainless Steel
Sugar Box



621000

Coffee Pot & Dripper Set 400 ml



621004

Waterdrip Coffee Server 440 ml



621001

Coffee Pot & Dripper Set 600 ml



621005

Waterdrip Coffee Server (UHURU) 440 ml



621002

Coffee Pot & Dripper Set (Barafu) 600 ml



621006

Coffee Press 480 ml



621003

Coffee Carafe & Dripper Set 600 ml



701080
Spazzolino Multiuso

Coffeetool LP



701085
Scavolino Small

Steam Wand Cleaning Brush Small



701081
Ricambio Spazzolino (3 pezzi)

Replacement Bristle (3 pieces)



701082
Chiave Caffeina

Caffeine Wrench



701083
Spazzolino Macinino

Grindminder



701084
Scavolino Large

Steam Wand Cleaning Brush Large



Foro di installazione
Installation hole : ø 120mm

615795 Sistema Pulizia Pro-Fondi ø58- ø53/Cleaning System Pro-Fondi ø58 - ø53
615795/11 Sistema Pulizia Pro-Fondi ø58- ø53 Volt110/Cleaning System Pro-Fondi ø58 - ø53 Volt 110

- Ottimizza la pulizia del filtro migliorando il risultato in tazza (da test eseguiti in laboratori di importanti torrefazioni)
- Evita di sporcare la pedana
- Evita il rumore della battuta migliorando il comfort acustico del vostro locale
- Riduce la sostituzione dei filtri e l'abrasione delle guarnizioni
- Elimina gli interventi di riparazioni e sostituzioni di cassetti battifondi
- Più veloce della classica battuta
- Evita traumi al tunnel carpale e avambraccio dovuti alla battuta
- Raccoglie e smaltisce i fondi in modo igienico
- Di facile e veloce pulizia non necessita di manutenzioni particolari
- Evita l'ingombro del vecchio cassetto verso l'operatore
- Raccoglie grandi quantità di fondi nello stesso sacchetto
- Evita la formazione di insetti causata dai fondi dispersi nel sotto pedana

- *Optimise cleaning of the filter thus improving results in the cup (from tests performed in the laboratories of leading coffee roasters)*
- *Avoids dirtying the base*
- *Avoids the noise from combing thus improving the acoustic comfort of your premises*
- *Avoids replacement of the filters and abrasion of the units*
- *Avoids repairs and replacements of coffee grounds drawers*
- *Quicker than traditional combing*
- *Avoids discomfort to the carpal tunnel*
- *Collects and disposes of the coffee grounds hygienically*
- *It does not require special cleaning or maintenance*
- *Avoids the old bulky drawer that hinders the operator*
- *Collects large quantities of grounds in the same bag*
- *Avoids the presence of insects caused by the grounds dispersed under the base*



615780
Spazzole giranti con molle per portafiltri ø53

Wheel with springs for filterholders ø53



615781
Spazzole giranti con molle per portafiltri ø58

Kit wheel with springs for filterholders ø58



615782
Kit molle contatto

Springs kit



615783
Kit molle girante

Wheel springs kit



615784
Trasformatore 12 Vdc 2A

Transformer 12 Vdc 2A



Foro di installazione
Installation hole : ø 120mm

615787 Sistema Pulizia Pro-Fondi "EVO" ø58- ø53/Cleaning System Pro-Fondi "EVO" ø58 - ø53
615787/11 Sistema Pulizia Pro-Fondi "EVO" ø58- ø53 Volt110/Cleaning System Pro-Fondi "EVO" ø58 - ø53 Volt 110

• Controllo digitale con temporizzazione del ciclo di pulizia (2 secondi) e inversione automatica del ciclo di rotazione per prolungare la durata della girante
• Ottimizza la pulizia del filtro migliorando il risultato in tazza (da test eseguiti in laboratori di torrefazione)
• Evita di sporcare la pedana
• Evita il rumore della battuta del portafiltro migliorando il comfort acustico del vostro locale
• Evita la sostituzione dei filtri e l'abrasione dei gruppi
• Più veloce della classica battuta
• Evita traumi al braccio e alla spalla
• Raccoglie e smaltisce i fondi in modo igienico
• Non necessita di pulizie e manutenzioni particolari
• Evita l'ingombro del vecchio cassetto verso l'operatore
• Raccoglie grandi quantità di fondi nello stesso sacchetto
• Evita la formazione di insetti causata dai fondi dispersi nel sotto pedana

• *Digital control with timed cleaning cycle (2 seconds) and automatic rotation cycle reversal, to extend the impeller duration*
• *Optimizes the filter cleaning improving the result in the cup (from tests performed in laboratories of roasting)*
• *Avoid to soil the footboard*
• *Prevents noise on the filter holder stroke, improving the acoustic comfort of your venue*
• *Avoid replacing filters and abrasion of the groups*
• *Faster than the classic beats*
• *Avoid trauma to the arm and shoulder*
• *Collect and dispose of coffee grounds in a hygienic way*
• *Does not require special maintenance and cleaning*
• *Avoid the obstruction of the old knock box to the operator*
• *Collects large amounts of coffee grounds in the same bag*
• *Prevents insects caused by the coffee grounds under the footboard*



615743
Pannello Scheda Display
Display Card Panel



615742
Gruppo Motore Con Carter e Cablaggi
Motor Group With Carter And Wiring



615744
Piastra Inox
Stainless Steel Plate



615745
Anello Ferma Sacchetto
Waste Bag Ring Holder



615785
Girante Ø 57-58mm Rosso
Wheel Brushes Ø 57-57mm Red



615786
Girante Ø 53-54mm Blu
Wheel Brushes Ø 53-54mm Blue



615784
Trasformatore 12 Vdc 2A
Transformer 12 Vdc 2A



615920
Manopola Pressino
Alluminio Nera Lucida

Tamper Handle Allu. Black Shiny



615925
Manopola Pressino
Legno Rosso Jarrah

Tamper Handle Wood Red Jarrah



615921
Manopola Pressino
Alluminio Rossa Opaca

Tamper Handle Allu. Red Matte



615926
Manopola Pressino Legno
Quercia Australiana

Tamper Handle Australian Oak Timber



615922
Manopola Pressino
Alluminio Blu Cobalto
Opaca

Tamper Handle Allu. Blue Cobalt Matt



615927
Manopola Pressino
Legno a Scacchi

Tamper Handle Timber Checkerboard Design



615923
Manopola Pressino
in Vernice Bianca

Tamper Handle Powder Coated White



615928
Manopola Pressino
Legno Ulivo

Tamper Handle in Olive Timber



615924
Manopola Pressino
in Vernice Tiffany

Tamper Handle Powder Tiffany



615929
Base Pressino ø 58 Flat

Tamper Base ø 58 Flat



615930
Base Pressino ø 58,30
Flat per E61

Tamper Base ø 58 Flat for E61



615935
Manopola Portafiltro
Legno Jarrah

Filterholder Handle Wood Jarrah



615931
Base Pressino "Big Step"

Tamper Base "Big Step"



615936
Manopola Portafiltro
Legno a Scacchi

Filterholder Handle Timber Checker



615932
Base Pressino ø 53 Flat

Tamper Base ø 53 Flat



615937
Manopola Portafiltro
Legno Quercia
Australiana

Filterholder Handle Australian Oak



615933
Kit 6 Basi per Pressino

6 Bases Kit for Tamper



615938
Manopola Portafiltro
Legno Zebrato

Filterholder Handle Timber Zebrato



615934
Manopola Portafiltro
Legno Ulivo

Filterholder Handle Olive



615939
Accessorio distribuz. caffe
"The Chisel"

Redistribution tool "The Chisel"



620437

Base in acciaio inox con barra battifondi
Dimensioni 250x375x85 mm

Heavy stainless steel base drawer with knock bar
Size 250x375x85 mm



622004

Barra gommata battifondi
Dimensioni ø30x240 mm

Knock box bar
Size ø30x240 mm



620436

Cassetto in acciaio inox con barra battifondi
Dimensioni cassetto 350x405x132 mm
Foratura 350x130 mm

Stainless steel drawer with knock bar
Drawer size 350x405x132 mm
Gap size 350x130 mm



620259

Cuscinetto completo per cassetto in acciaio inox

Complete bearing for stainless steel drawer



622005 ø35x300 mm
622006 ø35x325 mm
622007 ø35x350 mm

Barra gommata battifondi

Knock box bar



620246

Contenitore battifondi acciaio 4"
Dimensioni 153x140x105h mm

Stainless steel knock box 4"
Size 153x140x105h mm



620247

Contenitore battifondi acciaio 6"
Dimensioni 153x140x150h mm

Stainless steel knock box 6"
Size 153x140x150h mm



620210

Cassetto battifondi basculante fondo chiuso
Dimensioni 345 x 277 mm

Knock box closed bottom
Dimension 345 x 277 mm



620211

Cassetto battifondi basculante fondo aperto
Dimensioni 345 x 277 mm

Knock box open bottom
Dimension 345 x 277 mm



620241

Bastone battifondi
Dimensioni ø 40 x 320 mm

Knock box bar
Size ø 40 x 320 mm

Coffee Bean Roasting System



702507

- **Mixing** Off-axis rotation system (radiant heat)
- **Heating** Convection
- **Cooling** Normal temperature forced blow (approx 10 min)
- **Temperature range** 190 - 250 °C
- **Temperature control** 0 - 250 °C by an electronic thermostat
- **Heater capacity** 1000W
- **Power source** AC 100V-110V-120V-220V-230V-240V- 50/60 Hz
- **Consumption current** 1000W
- **Chamber materials** Heat resistant glass tube (pyrex)
- **Chamber capacity** 300g (max 350g) - 8.8oz (max 10oz)
- **Noise** 65 dB
- **Dimension** 383 x 243 x 229 mm (15 x 9.6 x 9 inches)
- **Net weight** 5.5kg (12lb)
- **Colour** Black



- **Spare part**

502004 Filter Assembly

Patented 3D rotation
Gene Café's unique mixing rotation system features off-axis roatation to ensure even distribution of the beans and better heat circulation during the roasting process.

Removable bisected roasting chamber
The divided roasting chamber efficiently distributes the beans as they roast. Ensuring even heat flow and efficient cooling. Gene Café roasters come with a chamber stand to safely and securly hold the chamber upright for convinient filling and cleaning.

High efficiency chaff removal
Perforations in the roasting chamber divider panel help to gently remove chaff, a thin membrane surrounding the bean, and whisk it away into a spacious collection chamber that is easy to detach and empty.

Fast response heat control
A simple dial provides precise control over the nickel chrome coil heater for accurate roasting temperature while an LED display shows both the set and actual temperatures.

Dynamic roasting and cooling
A second control knob makes it a snap to change the roasting cycle time on the fly. Manually switching from roasting to cooling is as easy as pressing a button. Digital displays show roasting time and cooling status.

Automatic cooling function
The Gene Café automatically switches from roasting to cooling, and temperature sensors control the cooling process. An audible tone lets you know when the cooling cycle has completed.

Cybernetic sensor safety system
In the event that the Gene café's roasting temperature exceeds a preset upper limit, the heater will automatically shut off.

Full range roasting
Gene Café can roast beans to any of the eight roast levels commonly referred to by coffee roasting professionals: Light, Cinnamon, Medium, High, City, Full City, French and Italian.

At home on the kitchen counter
Sleek Eurostyle design and a small footprint make the Gene Caffé an attractive addition to any kitchen or showroom.

Clear roasting chamber and safety cover
Being able to see the beans during roasting makes it easy to tell when you want to make time or temperature changes on the fly.
The hinged safety cover helps to isolate the roasting chamber.



Doccia RA 200 IM
Rancilio

525352

Shower Head RA 200 IM
Rancilio

525352



Doccia CI 200 IM
Cimbali-Astoria

525200

Shower Head CI 200 IM
Cimbali-Astoria

525200



Doccia GA 200 IM
Gaggia

525353

Shower Head GA 200 IM
Gaggia

525353



Doccia San Marco
Dalla Corte-P4Y

525201

Shower Head San Marco
Dalla Corte-P4Y

525201



Doccia SI 200 IM
Nuova Simonelli

525354

Shower Head SI 200 IM
Nuova Simonelli

525354



Doccia Gruppo Leva
Competition

525202

Shower Lever Group
Competition

525202



Doccia MA200 IM
Marzocco-Synesso-Slayer

522001

Shower Head MA200 IM
Marzocco-Synesso-Slayer

522001



Doccia Rete Fine
Rancilio 35WM

525002

Shower Head Fine
Rancilio 35WM

525002



Doccia Tipo E61
Competition

525001

Shower Head Tipo E61
Competition

525001



Doccia Rete Fine
S.Marco-Dalla Corte-PY

525003

Shower Head Fine
S.Marco-Dalla Corte-PY

525003



Doccia Rete Fine
Marzocco-Synesso 35WM

525004

Shower Head Fine
Marzocco-Synesso 35WM

525004



Doccia Rete Fine
Nuova Simonelli 35WM

525007

Shower Head Fine Nuova
Simonelli 35WM

525007



Doccia Rete Fine
Cimbali-Astoria 35WM

525005

Shower Head Fine
Cimbali-Astoria 35WM

525005



Doccia Doppia Spaziale
SP 200 IM SPD 200 IM

525008

Double Shower Spaziale
SP 200 IM SPD 200 IM

525008



Doccia Rete Fine
Tipo E61Competit 35WM

525006

Shower Head Fine Tipo
E61Competit 35WM

525006



Doccia Tipo E61Competi-
tion 200 RM

525009

Shower Head Type E61
Competition 200 RN

525009

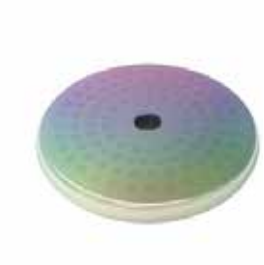

Doccia MA200 NT
Marzocco/Synesso/Slayer

522001/NT

MA200 NT Marzocco/ Synesso/Slayer Shower

522001/NT



Doccia CI200 NT
Cimbali

522003/NT

CI200 NT Cimbali Shower

522003/NT



Doccia SI200 NT
Nuova Simonelli

522002/NT

SI200 NT Nuova Simonelli Shower

522002/NT



Doccia E61200 NT
Faema

522004/NT

E61200 NT Faema Shower

522004/NT

B65 – Per macchine: Astoria Plus 4 You, La Spaziale, Wega Concept.

B66 – Per macchine: Dalla Corte, La San Marco, Izzo.

B68 – Per macchine: Cimbali, Carimali, Gaggia, Reneka.

B70 – Per macchine: Marzocco, Synesso, Slayer, Kees Van der Westen, Nuova Simonelli, Victoria Arduino, Rancilio, Promac, Magister, Astoria, Conti, Elektra, Pavoni, Fracino. E61 e gruppi compatibili come Faema, Vibiemme, Wega, Ascaso, Bezzera, Bfc, Bianchi, Brasilia, D.i.d. L'orchestrale, Ecm, Expobar, Fiorenzato, Grimac, Iberital, La Nuova Era, La Scala, Quality Espresso, Rocket, Royal First, San Remo, SV – Sab, Vfa.

***B65** – Suitable for use with machines: Astoria Plus 4 Yuo, La Spaziale, Wega Concept.*

***B66** – Suitable for use with machines: Dalla Corte, La San Marco, Izzo.*

***B68** – Suitable for use with machines: Cimbali, Carimali, Gaggia, Reneka.*

***B70** – Suitable for use with machines: Marzocco, Synesso, Slayer, Kees Van der Westen, Nuova Simonelli, Victoria Arduino, Rancilio, Promac, Magister, Astoria, Conti, Elektra, Pavoni, Fracino. E61 and compatible groups such as Faema, Vibiemme, Wega, Ascaso, Bezzera, Bfc, Bianchi, Brasilia, D.i.d. L'orchestrale, Ecm, Expobar, Fiorenzato, Grimac, Iberital, La Nuova Era, La Scala, Quality Espresso, Rocket, Royal First, San Remo, SV – Sab, Vfa.*



Filtro B68 1 T H24,5 E

527867

Filter Basket B68 1 T H24,5 E

527867



Filtro B70 2 T H24,5 M

527245

Filter Basket B70 2 T H24,5 M

527245



Filtro B68 2 T H24,5 M
senza canalino

527868

Filter Basket B68 2 T H24,5 M Ridgeless

527868



Filtro B70 2T C H24 E
senza canalino

527246

Filter Basket B70 2T C H24 E Ridgeless

527246



Filtro B68 2 T H26,5 E
senza canalino

528265

Filter Basket B68 2 T H26,5 E Ridgeless

528265



Filtro B70 1 T H26,5 E

527264

Filter Basket B70 1 T H26,5 E

527264



Filtro B70 1 T H24,5 N

527244

Filter Basket B70 1 T H24,5 N

527244



Filtro B70 2 T H26,5 M

527265

Filter Basket B70 2 T H26,5 M

527265



Filtro B70 2T C H26 E
senza canalino

527266

Filter Basket B70 2T C H26 ERidgeless

527266



Filtro B70 2 T H28,5 E
senza canalino

527285

Filter Basket B70 2 T H28,5 E Ridgeless

527285



Filtro B66 1T H25 M

527200

Filter Basket B66 1T H25 M

527200



Filtro B66 2T H26 M

527201

Filter Basket B66 2T H26 M

527201



Filtro Aereopress

527290

Filter Aereopress

527290



Filtro B66 2T H32 M
senza canalino

527202

Filter Basket B66 2T H32 M Ridgeless

527202



Filtro B65 2T H27,5 M

525275

Filter Basket B65 2T H27,5 M

525275



Filtro B65 2T H32 M
senza canalino

525320

Filter Basket B65 2T H32 M Ridgeless

525320



Filtro per Siphon

527291

Filter for Siphon

527291



Motta
Made in Italy

620203 2 tazze/0.25L
620240 3 tazze/0.35L
620202 4 tazze/0.50L
620235 6 tazze/0.75L
620236 8 tazze/1L

Motta
Made in Italy
Heavy stainless steel jug with accentuated spout and heavy body.

620203 2 cups/0.25L
620240 3 cups/0.35L
620202 4 cups/0.50L
620235 6 cups/0.75L
620236 8 cups/1L



Easy

620250 3 tazze/0.30L
620251 6 tazze/0.60L
620252 8 tazze/0.80L
620253 10 tazze/1.00L

Easy

620250 3 cups/0.30L
620251 6 cups/0.60L
620252 8 cups/0.80L
620253 10 cups/1.00L



Anniversario
Made in Italy

620214 3 tazze/0.30L
620216 9 tazze/0.75L
620217 12 tazze/1L

Anniversario
Made in Italy

620214 3 cups/0.30L
620216 9 cups/0.75L
620217 12 cups/1L



Mini

620222 1cl Set 4 pz.
620223 3cl Set 2 pz.

Mini

620222 1cl Set 4 pz.
620223 3cl Set 2 pz.



Cremierino

620238 3oz / 0.10L

Small milk Jug

620238 3oz / 0.10L



Lattiera Antiaderente
Easy

620255 3 tazze cl.30
620256 6 tazze cl.60
620257 8 tazze cl.80
620258 10 tazze cl.100

Coating Milk Pitcher Easy

620255 3 cups cl.30
620256 6 cups cl.60
620257 8 cups cl.80
620258 10 cups cl.100



Spargicacao 280 gr
620237

Stainless steel cocoa shaker 10 oz
620237



Decoratore Cappuccino
620254

Cappuccino Decorato
620254



Spargicacao Acciaio inox
Made in Italy
620234

Stainless steel cocoa shaker
Made in Italy
620234



Decoratore Cacao

620248

Cacao Decorator

620248



Punteruolo per latte Art
620212
620212/R Rosso
620212/B Blu

Latte Art Pen
620212
620212/R Red
620212/B Blu



Bottiglietta decorazioni
701060

Decorations squeeze bottle
701060



Timer digitale con magnete e clip
701059

Digital Timer with magnet and clip
701059



Termometro per lattiere NR
Ø 29 mm
620208

NR Milk Jug Thermometer
Ø 29 mm
620208



Timer digitale con magnete
701062

Digital Timer with magnet
701062



Termometro per lattiere NR
Ø 35 mm
620189

NR Milk Jug Thermometer
Ø 35 mm
620189



Spruzzatore per pulizia lattiere

701071
Dimensioni 174x160x69h mm

Frothing pitcher rinser

701071
Dimension 174x160x69h mm



Spruzzatore per pulizia lattiere da banco

701070
Dimensioni 174x160x129h mm

Counter top frothing pitcher rinser

701070
Dimension 174x160x129h mm



Assieme per spruzzatore

800002

Rinser Assembly

800002



Disco spruzzatore

800001

Rinser Disk

800001



Distanziale spuzzatore

800003

Spacer Assembly

800003



Kit nuovo disco spruzzatore

701076

Kit new rinser disk

701076



Kit manutenzione con molla spruzzatore lavalattiere
800004

Pitcher rinser maintenance kit with spring
800004



Kit Accessorio per vassoiopulizia lattiere

701073

Accessory kit for milk jugs rinser tray

701073



Vassoio per pulizia lattiere da banco
701072
Dimensioni 400x220x30mm
701078
Dimensioni 600x220x30mm

Milk jugs rinser tray counter top
701072
Dimension 400x220x30 mm
701078
Dimension 600x220x30 mm



Vassoio per pulizia lattiere da incasso
701077
Dimensioni 400x220x34 mm
701079
Dimensioni 600x220x34 mm

Milk jugs rinser tray for recessed
701077
Dimension 400x220x34 mm
701079
Dimension 600x220x34 mm



Cucchiaio Agitatore Acciaio

701041 29cm/ 11"

Stirring Spoon

701041 29cm/ 11"



Dosatore in metallo con tappo in plastica (12Pz.)

701042

Metal Pourer with Plastic Cork (12 Pcs.)

701042



Cucchiaio assaggio

620218

Taste Spoon

620218



Spatola

701043 6"/ 15cm

Foam Knife

701043 6"/ 15cm



Panno Barista Nero Neutro 40x30 cm C/MOSCHETTONE

620810

Barista Towel Black Neutral 40x30 cm WITH CLIP

620810



Il kit contiene tutti gli strumenti necessari al venditore di caffè.

The kit has all the tools a coffee salesman requires.

701075 Kit Professionale Coffee Test	Aurora Brugnetti Faema Rancilio
701075/A Kit Professionale Coffee Test	Astoria Bezzera Brasilia
701075/C Kit Professionale Coffee Test	Cimbali
701075/CA Kit Professionale Coffee Test	Carimali
701075/G Kit Professionale Coffee Test	Gaggia
701075/NS Kit Professionale Coffee Test	Nuova Simonelli
701075/P Kit Professionale Coffee Test	Pavoni
701075/SM Kit Professionale Coffee Test	San Marco
701075/SP Kit Professionale Coffee Test	Spaziale
701075/V Kit Professionale Coffee Test	BFC Brasilia CS Fiorenzato Faema Futurmat La Marzocco La Scala Rancilio Vibiemme Wega

I codici sono determinati dal portafiltro con manometro adatto al modello di macchina da caffè
Il kit contiene: un bicchierino graduato in pirex, un termometro, una bilancina digitale, un portafiltro con manometro, entrata termometro e dosatura, un pressino in plastica, un misurino in plastica, uno spazzolino 'Smart', un filtro cieco, un barattolo clean express in pastiglie e un kit prova durezza.

Codes are related to the suitable filter holder with manometer for your espresso machine.

The kit includes: a pirex shot glass, a thermometer, a digital scale, a filter holder with manometer, thermometer connection and dose, a plastic tamper, a plastic spoon, a 'Smart' brush, a blind filter, a tub of Clean Express tablets and a water hardness test kit.

PORTAFILTRO CIALDE E PORTAFILTRO TEFLONATO

Filter Holder for Pods and Teflon Coated Filter Holder



620190	Aurora - Brugnetti
	Brasilia gruppo B61
	Conti - Faema (vecchi modelli)
	Futurmat - Ariete
620190/A	Astoria - Bezzera
	Brasilia - Gruppo BE
620190/AP	Astoria 53 mm
620190/C	Cimbali
620190/CA	Carimali
620190/DC	Dalla Corte
620190/G	Gaggia
620190/LM	La Marzocco
620190/NS	Nuova Simonelli
620190/P	Pavoni
620190/R	Reneka
620190/SM	San Marco
620190/SP	Spaziale
620190/V	Faema (nuovi modelli)
	Rancilio - La Scala
	San Remo - SV
	Vibiemme - Wega



620901	Aurora-Brugnetti
	Faema (vecchi modelli)
	Futurmat
620902	Astoria
	Bezzera
	Brasilia
620903	Cimbali
620904	Carimali
620905	Gaggia
620906	Nuova Simonelli
620907	Pavoni
620908	Spaziale
620909	San Marco
620910	Rancilio
	Rocket
	Elektra
620911	Faema (nuovi modelli)
	BFC
	La Scala
	San Remo
	Wega
	Vibiemme
620912	Conti



Portafiltro con manometro e entrata termometro.
Disegnato per controllare pressione e temperatura nel gruppo e permette di settare la dosatura senza usare il caffè.

Filter holder with manometer and thermometer connection
Designed to check the pressure and temperature in your group head and setting of the doses without using coffe.

620913 Aurora-Brugnetti
Brasilia gruppo B61
Conti
Faema (vecchi modelli / *old models*)
Futurmat-Ariete
620913/A Astoria
Bezzera
Brasilia
620913/AP Astoria 53 mm +4U
620913/C Cimbali
620913/CA Carimali
620913/DC Dalla Corte
620913/G Gaggia
620913/NS Nuova Simonelli
620913/R Rancilio
620913/SM San Marco
620913/SP Spaziale
620913/V BFC
ECM
Elektra
Faema (nuovi modelli / *new models*)
Isomac
La Marzocco
La Scala
Rocket
San remo
SV
Vibiemme
Wega



Termometro digitale
-50 °C+300 °C
Adatto al nostro portafiltro con manometro.

Digital thermometer
-50 °C+300 °C
Suitable for connection to our filter holder with manometer.

620204



Portafiltro con manometro.

Filter holder with manometer.

700113 Aurora-Brugnetti
Conti-Faema (vecchi modelli /*old models*)
Futurmat-Ariete
700113/A Astoria-Bezzera
Brasilia
700113/AP Astoria 53 mm +4U
700113/C Cimbali
700113/CA Carimali
700113/G Gaggia
700113/NS Nuova Simonelli
700113/P Pavoni
700113/SM San Marco
700113/SP Spaziale
700113/V Faema (nuovi modelli / *new models*)
Elektra
La Marzocco-La Scala
Rancilio-San Remo
SV-Vibiemme-Wega

700148/Z



Portafiltro per capsule
Capsule filter holder

620922 Astoria- Brasilia - Bezzera
620924 Cimbali
620925 La Spaziale
620926 La Pavoni
620927 Faema - Casadio
620928 Gaggia - Saeco
620929 San Marco
620929/L San Marco a leva
620930 Nuova Simonelli
620931 Dalla Corte
620932 Carimali
620935 Astoria 53mm

Portafiltro per capsule bidose
Capsule filter holder bidose

620933 BFC - Brasilia - Brugnetti - Futurmat - Marzocco - La Scala San Remo - SV - Vibiemme - Wega
620934 Astoria - Brasilia - Bezzera
620936 Cimbali



Portafiltro per capsule con valvola
Capsule filter holder with valve

620922/V Astoria - Brasilia - Bezzera
620924/V Cimbali
620925/V La Spaziale
620927/V Faema
620928/V Gaggia - Saeco
620929/V San Marco
620929/LV San Marco a Leva
620930/V Nuova Simonelli
620931/V Dalla Corte
620932/V Carimali



Portafiltro per capsule Segrafedo
Segafredo Capsule filter holder

620921/S Brugnetti - Cime - La Marzocco - La Scale - Sanremo - SV Italia - Vibiemme - Wega
620922/S Astoria-Brasilia-Bezzera
620923/S Elektra-Rancilio-Rocket
620924/S Cimbali
620925/S La Spaziale
620926/S La Pavoni
620927/S Brasilia B61-Faema-Futurmat
620930/S Nuova Simonelli
620935/S Astoria 53mm P4U



Portafiltro per capsule new

Capsule filter holder new

Per: BFC - Brugnetti - Cime - La Scala - Rancilio - San Remo - SV ITALIA - Vibiemme - Wega

620947 Capsula singola
620948 Capsula singola con beccuccio singolo
620946 Capsula doppia con beccuccio singolo
620945 Capsula doppia con beccuccio doppio

Per: Faema

620949 Capsula singola

Per: Marzocco - Synesso - Slayer

620943 Capsula doppia

Per: La Spaziale

620954 Capsula singola per portadoccia H11
620951 Capsula singola per portadoccia H13

Per: Cimbali

620955 Capsula singola



Per: BFC - Brugnetti - Cime - La Scala - Rancilio - San Remo - SV ITALIA - Vibiemme - Wega

620947/V Capsula singola con valvola
620948/V Capsula singola con valvola beccuccio singolo
620946/V Capsula doppia con valvola beccuccio singolo
620945/V Capsula doppia con valvola beccuccio doppio

Per: Faema

620949/V Capsula singola con valvola

Per: Marzocco - Synesso - Slayer

620942/V Capsula singola con valvola
620943/V Capsula doppia con valvola

Per: La Spaziale

620954/V Capsula singola con valvola per portadoccia H11 mm.
620951/V Capsula singola con valvola per portadoccia H13 mm.

Per: Cimbali

620955/V Capsula singola con valvola

PORTAFILTRI SENZA FONDO INCLUSI DI FILTRO

Complete naked filter holders



300214/N Conti

Portafiltro senza fondo 21gr
Naked filter holder 21gr

526757

Filtro
Filter



460016/N Aurora
Bfc
Ecm
Elektra
Faema
Futurmat- Ariete
La Scala
Marzocco
Sanremo
Sv Italia
Vibiemme
Wega

Portafiltro senza fondo 21gr
Naked filter holder 21gr

526757

Filtro
Filter



573525/N Faema
(old)

Portafiltro senza fondo 21gr
Naked filter holder 21gr

526757

Filtro
Filter



573525/LMN Wega

Portafiltro senza fondo 21gr
Naked filter holder 21gr

526757

Filtro
Filter



700249/N Cimbali

Portafiltro senza fondo 21gr
Naked filter holder 21gr

526757

Filtro
Filter



700399/N San Marco

Portafiltro senza fondo 21gr
Naked filter holder 21gr

526405/A

Filtro
Filter



700565/N Gaggia

Portafiltro senza fondo 21gr
Naked filter holder 21gr

700256

Filtro
Filter



700721/N Astoria
Brasilia
Bezzera

Portafiltro senza fondo 21gr
Naked filter holder 21gr

526757

Filtro
Filter



700804/N Pavoni

Portafiltro senza fondo 21gr
Naked filter holder 21gr

526757

Filtro
Filter

PORTAFILTRI SENZA FONDO INCLUSI DI FILTRO

Complete naked filter holders



700299/N Rancilio

Portafiltro senza fondo 21gr
Naked filter holder 21gr

526757

Filtro
Filter



703200/N Spaziale

Portafiltro senza fondo 21gr
Naked filter holder 21gr

526211

Filtro
Filter



700721/AP Astoria+4U

Portafiltro senza fondo 14gr
Naked filter holder 14gr

526207

Filtro
Filter



703414/N Nuova Simonelli

Portafiltro senza fondo 21gr
Naked filter holder 21gr

526757

Filtro
Filter



701854/N
Pavoni Europiccola

Portafiltro cromato senza fondo 14gr (tipo nuovo)
Naked filter holder 14g (new type)

701851



703815/N Carimali

Portafiltro senza fondo 14gr
Naked filter holder 14gr

526202

Filtro
Filter



705107 Dalla Corte

Portafiltro senza fondo 21gr
Naked filter holder 21gr

526405/A

Filtro
Filter



620651/N Bfc
Brugnetti
Casadio
Cime
Ecm
Elektra
Expobar
Faema
Fiamma
La Marzocco
La Scala
Promac
Quality Espresso
Rancilio
Rocket
Royal
Sanremo
Sv Italia
Vibiemme
Victoria Arduino
Wega

Portafiltro senza fondo 42gr
Naked filter holder 42gr

620652

Filtro
Filter



Pressino alluminio
Prodotto da Nuova Ricambi.

620438 ø 58mm
620439 ø 53mm
620444 ø 51mm
620445 ø 49mm

Alluminium Tamper
Made by Nuova Ricambi.

620438 ø 58mm
620439 ø 53mm
620444 ø 51mm
620445 ø 49mm



Pressino acciaio inox

620852 ø 58mm

Stainless steel Tamper

620852 ø 58mm



Pressino acciaio inox

620894 ø 53mm

Coffee Tamper Stainless steel

620894 ø 53mm



Pressino acciaio inox

620895 ø 57mm

Stainless steel Tamper

620895 ø 57mm



Pressino plastica

513744 58-53 mm

Plastic Tamper

513744 58-53 mm



Pressino plastica

513743 52-49 mm

Plastic Tamper

513743 52-49 mm



Accessorio distribuzione caffè regolabile

620807 ø 53mm
620808 ø 57mm
620809 ø 58mm
620811 ø 58,5mm

Coffee redistribution tool adjustable

620807 ø 53mm
620808 ø 57mm
620809 ø 58mm
620811 ø 58,5mm



516264

Misurino inox 7gr

Stainless steel coffee spoon 7 gr



620245

Termometro infrarossi
-50 °C+380 °C 0,8"

Infrared thermometer
-50 °C+380 °C 0,8"



516264/P

Misurino plastica 7gr

Plastic coffee spoon 7 gr



620244

Termometro digitale
-50 °C+300 °C

Digital thermometer
-50 °C+300 °C



701011

Bicchierino pirex con dosi

Pirex lined shot glass



620204

Termometro digitale
-50 °C+300 °C

Digital thermometer
-50 °C+300 °C



701061

Bilancia digitale
on-balance 500g
110x80x25mm

On-balance
digital scale 500g
110x80x25mm



615739

Il rifrattometro digitale intelligente HM Digital combina la raffinata tecnologia di misurazione con un controllo semplice e intuitivo. Grazie alla tecnologia Bluetooth puoi misurare, controllare, registrare e inviare i dati relativi al tuo caffè direttamente sul tuo smartphone grazie all'applicazione HMDigital Smart.
Lettura accurata e corpo resistente.
DESCRIZIONE PRODOTTO
Unità di misura: Brix, TDS, Temperatura

- Range:
  Brix 0.00% ~ 26.0%
  TDS 0.00% ~ 23.0%
  Temp 0 °C ~ 70°C / 32~158°F
- Risoluzione:
  Brix 0.01%
  TDS 0.01%
  Temp 0.1°C
- Precisione:
  Brix ±0.2%
  TDS ±0.2%
  Temp ±1.0°C

- Funzione ATC inclusa (compensazione della temperatura 10 ~ 60°C/50~140°F)
- Tempo di misurazione entro 5 secondi
- Funzione di spegnimento automatico dopo 2 minuti
- Controllo automatico della luminosità dello schermo (20 secondi)
- Ambiente di utilizzo: 10 ~ 40 °C
- Volume campione inattivo: 0,5 ml
- Fonte di alimentazione 1,5 V x 2 (AAA alcalino)
- Dimensioni: 58(W) x 36(D) x 122(H)mm
- Peso: 149 g (incluse batterie e coperchio rimovibile)
- Wireless: Tecnologia Bluetooth

Usa l'applicazione per cellulare HM Coffee per creare profumi e sapori indimenticabili, monitorando la tua ricetta più raffinata.

HM Digital's Smart Digital Refractometer combines the refined measuring technology with effortless friendly control. Thanks to Bluetooth technology you can measure, control, record and send the data relating to your coffee directly to your smartphone thanks to the HMDigital Smart application.
Accurate reading and durable body.
PRODUCT DESCRIPTION
Measurement Units: Brix, TDS, Temperature

- Range:
  Brix 0.00% ~ 26.0%
  TDS 0.00% ~ 23.0%
  Temp 0 °C ~ 70°C / 32~158°F
- Resolution:
  Brix 0.01%
  TDS 0.01%
  Temp 0.1°C
- Accuracy:
  Brix ±0.2%
  TDS ±0.2%
  Temp ±1.0°C

- ATC Function included (Temperature Compensation 10 ~ 60°C / 50 ~140°F)
- Within 5 Seconds Measurement time
- Auto shut-off function after 2 minutes
- Automatic screen brightness control (20 seconds)
- Usage Environment: 10 ~ 40 °C
- Idle Sample Volume: 0.5ml
- Power Source 1.5V x 2(AAA alkaline)
- Size: 58(W) x 36(D) x 122(H)mm
- Weight: 149g (including batteries and detachable cover)
- Wireless: Bluetooth Technology

Use HM Coffee smatphone application to create unforgettable scent and flavors, while tracking your finest recipe.



Supporto portafiltro
Supporto portafiltro in acciaio inox con portapressino.

620866 Modello completo

Filter holder support
Complete stainless steel filter holder and tamper support.

620866 *Complete model*



Supporto portafiltro 'Style'
Supporto portafiltro in acciaio inox.

620869 'Style'

'Style' Filter holder support
Stainless steel filter holder support.

620869 *'Style'*



Supporto portafiltro
Supporto portafiltro in acciaio inox.

620857

Filter holder support
Stainless steel filter holder support.

620857



702688 Macinacaffè M2D Programmabile Micrometrico
Motore 230V/50Hz 150W 1400 rpm - **Macine** Piana ø 50 mm
Produttività 3,5 kg/h - **Capacità campana** 250 g
Peso 4,8 kg - **Dimensioni** 152 x 250 x h382 mm
Una dose programmabile - Forcella regolabile in altezza

702688 M2D Programmable Coffee Grinder Stepless Adjustment System
Motor *230V/50Hz 150W 1400 rpm* - ***Blades*** *Flat ø 50 mm*
Productivity *3,5 kg/h* - ***Hopper Capacity*** *250 g*
Weight *4,8 kg* - ***Dimensions*** *152 x 250 x h382 mm*
One dose programmable - Height adjustable fork

- ***702688/C*** *Colour* ***C83 Chrome***
- ***702688/W*** *Colour* ***C05 White***
- ***702688*** *Colour* ***C10 Grey***
- ***702688/N*** *Colour* ***C18 Black***
- ***702688/G*** *Colour* ***C21 Yellow***
- ***702688/R*** *Colour* ***C23 Red***
- ***702688/A*** *Colour* ***C32 Orange***
- ***702688/B*** *Colour* ***C38 Blue***
- ***702688/V*** *Colour* ***C50 Green***



702689 Macinacaffè M42D "On Demand" Micrometrico
Motore 230V/50Hz 250W 1400 rpm
Macine Piana ø 58 mm
Produttività 7,2 kg/h - **Capacità campana** 500 g
Peso 7,5 kg - **Dimensioni** 194 x 308 x h430 mm
Regolazione Micrometrica - Tre dosi programmabili
Dosatura manuale - Dispositivo contadosi

702689 M42D Coffee Grinder "On demand" stepless Adjustment System
Motor *230V/50Hz 250W 1400 rpm*
Blades *Flat ø 58 mm*
Productivity *7,2 kg/h* - ***Hopper Capacity*** *500 g*
Weight *7,5 kg* - ***Dimensions*** *194 x 308 x h430 mm*
Stepless adjustment system - Three doses programmable
Manual dosing - Dosing counter



702685 Macinacaffè M7D "On Demand" Micrometrico
Motore 230V/50Hz 800W 350 rpm
Macine Coniche Ø 68 mm
Produttività 16 kg/h - **Capacità campana** 1,4 kg
Peso 16 kg - **Dimensioni** 250 x 360 x h635 mm
Regolazione micrometrica - Tre dosi programmabili
Dosatura manuale - Dispositivo contadosi

702685 M7D Coffee Grinder "On Demand" Stepless Adjustment System
Motor *230V/50Hz 800W 350 rpm*
Blades *Conical Ø 68 mm*
Productivity *16 kg/h* - ***Hopper Capacity*** *1,4 kg*
Weight *16 kg* - ***Dimensions*** *250 x 360 x h635 mm*
Stepless adjustment system - Three doses programmable
Manual dosing - Dosing counter



702681 Macinacaffè MXD “On Demand” Micrometrico
Motore 230V/50Hz 340W 1400 rpm
Macine Piana ø 75 mm
Produttività 10 kg/h - **Capacità campana** 1,4 kg
Peso 11 kg - **Dimensioni** 230 x 370 x h600 mm
Regolazione micrometrica - Tre dosi programmabili
Dosatura manuale - Dispositivo contadosi

702681 MXD Coffee Grinder “On Demand” Stepless Adjustment System
Motor *230V/50Hz 340W 1400 rpm*
Blades *Flat ø 75 mm*
Productivity *10 kg/h* ***- Hopper Capacity*** *1,4 Kg*
Weight *11 kg* ***- Dimensions*** *230 x 370 x h600 mm*
Stepless adjustment system - Three doses programmable
Manual dosing - Dosing counter



702871 Pressino dinamometrico professional

702871 Dynamometric tamper professional



702834 Pressino dinamometrico professional CPS twist

702834 Dynamometric tamper professional CPS twist



702005 Macinadosatore HC600 Automatico Grigio
702006 Macinadosatore HC600 Automatico Nero
702013 Macinadosatore HC600 Automatico Rosso
702548 Macinadosatore HC600 Automatico Bianco
Motore 230V -50Hz -550W -1600 rpm
Macine Piana ø 64 mm
Produttività 7-9 kg/h - **Capacità campana** 1,2 kg
Peso 14 kg - **Dimensioni** 210x330x600 mm
Consigliato per un consumo giornaliero di caffè di 3 kg.

702005 HC600 Grey Automatic Coffee Grinder
702006 HC600 Black Automatic Coffee Grinder
702013 HC600 Red Automatic Coffee Grinder
702548 HC600 White Automatic Coffee Grinder
Motor *230V - 50Hz -550W - 1600 rpm*
Blades *Flat ø 64 mm*
Productivity *7-9 kg/h* - ***Hopper Capacity*** *1,2 kg*
Weight *14 kg* - ***Dimensions*** *210x330x600 mm*
Recommended for 3 kg daily coffee consume.



702540 Macinadosatore HC700 Automatico Silver
702553 Macinadosatore HC700 Automatico Nero
Motore 230 -50Hz - V 350W - 1600 rpm
Macine Piana ø 64 mm
Produttività 4/18 kg/h - **Capacità campana** 1,2 kg
Peso 15 kg - **Dimensioni** 210x330x600 mm
Consigliato per un consumo giornaliero di caffè di 3-5 kg.

702540 HC700 Automatic Coffee Coffee Grinder Silver
702553 HC700 Automatic Coffee Coffee Grinder Black
Motor *230 -50Hz - V 350W - 1600 rpm*
Blades *Flat ø 64 mm*
Productivity *4/18 kg/h* - ***Hopper Capacity*** *1,2 kg*
Weight *15 kg* - ***Dimensions*** *210x330x600 mm*
Recommended for 3-5 kg daily coffee consume.



702555 Macinadosatore H5 Nero
Motore 230V- 50-60Hz- 350W
Macine Piana ø 64 mm
Produttività 4/6 kg/h - **Capacità campana** 0,25 kg
Peso 5 kg - **Dimensioni** 135x275x310 mm
Carrozzeria in plastica.
Consigliato per speciality coffee, decaffeinato e casa

702555 Coffee Grinder H5 Black
Motor *230V- 50-60Hz- 350W*
Blades *Flat ø 64 mm*
Productivity *4/6 kg/h* - ***Hopper Capacity*** *0,25 kg*
Weight *5 kg* - ***Dimensions*** *135x275x310 mm*
Recommended for specialty coffee,
decaffeinated and domestic use



702576 Macinacaffè HC 880 LAB Nero
Motore 230V-50Hz-550W
Macine Piana ø 84 mm
Produttività 13/16 kg/h - **Capacità campana** 2kg
Peso 26 kg - **Dimensioni** 180x450x685 mm
Vendita caffè consigliato al banco.

702576 HC 880 LAB Black Coffee Grinder
Motor *230V-50Hz-550W*
Blades *Flat ø 84mm*
Productivity *13/16 kg/h* - ***Hopper Capacity*** *2 kg*
Weight *26kg* - ***Dimensions*** *180x450x685 mm*
Ground coffee sales.



702575 Macinadosatore Major Elettronico
Motore 220V- 50Hz- 650W- 1400 rpm
Macine Piana ø 83 mm
Capacità campana 1,8 kg
Peso 20 kg - **Dimensioni** 240x455x635 mm
Ideale per consumi medio elevato.

702575 Coffee Grinder Major
Motor *220V- 50Hz- 650W- 1400 rpm*
Blades *Flat ø 83 mm*
Hopper Capacity *1,8 kg*
Weight *20 kg* - ***Dimensions*** *240x455x635 mm*
Suitable for medium/high consumption.



702510 Macinadosatore Automatico Silenzioso 64M Mito
Motore 220V-50Hz-250W-1400 rpm
Macine Piana ø 64 mm
Produttività 9 kg/h - **Capacità campana** 1 kg
Peso 13 kg - **Dimensioni** 550x210x370 mm
Consigliato per un consumo giornaliero di caffè di 5 kg.

702510/38 Macinadosatore Automatico Silenzioso 64M Mito 400V
Motore 400V-50Hz

702510 64M Mito Maxi Silent Automatic Coffee Grinder
Motor *220V-50Hz-250W-1400 rpm*
Blades *Flat ø 64 mm*
Productivity *9 kg/h* - ***Hopper Capacity*** *1 kg*
Weight *13 kg* - ***Dimensions*** *550x210x370 mm*
Recommended for 5 kg daily coffee consume.

702510/38 64M Mito 400V Maxi Silent Automatic Coffee Grinder
Motor *400V-50Hz*



702554 Macinino Mito Performance E Maxi
Motore 230V-50/60Hz 370W 900rpm
Macine Piana Ø 75mm
Produttività 11Kg/h - **Capacità campana** 1,5 kg
Peso 13 kg - **Dimensioni** 210x370x550 m

702554 Grinder Mito Performance E Maxi
Motor *230V-50/60Hz 370W 900rpm*
Blades *Flat ø 75 mm*
Productivity *11kg/h* - ***Hopper Capacity*** *1,5 kg*
Weight *13 kg* - ***Dimensions*** *210x370x550 mm*



702572 Macinino Mito "On Demand" M/64 V230/2
702573 Macinino Mito "On Demand" M/75 V230/2
Motore 230V-50/60Hz 350W 1400 rpm - 230V-50/60Hz 480W 1400 rpm
Macine Piana ø 64 mm - Piana ø 75 mm
Produttività 9 kg/h - 11 kg/h - **Capacità campana** 1,5 kg - 1,5 kg
Peso 13 kg - 13 kg - **Dimensioni** 550x210x370 mm - 550x210x370 mm

702572 Grinder Mito "On Demand" M/64 V230/2
702573 Grinder Mito "On Demand" M/75 V230/2
Motor *230V- 50/60Hz- 350W- 1400 rpm - 230V- 50/60Hz- 480W- 1400rpm*
Blades *Flat ø 64 mm - Flat ø 75 mm*
Productivity *9 kg/h - 11 kg/h* - ***Hopper Capacity*** *1,5 kg - 1,5 kg*
Weight *13 kg - 13 kg* - ***Dimensions*** *550x210x370 mm - 550x210x370 mm*



702574 Macinino Mito Touch
Motore 230V-50/60Hz 570W 1400 rpm
Macine Piana Ø 75mm
Produttività 11Kg/h - **Capacità campana** 1,5 kg
Peso 13 kg - **Dimensioni** 210x370x550 m

702574 Grinder Mito Touch
Motor *230V-50/60Hz 570W 1400 rpm*
Blades *Flat ø 75 mm*
Productivity *11kg/h* - ***Hopper Capacity*** *1,5 kg*
Weight *13 kg* - ***Dimensions*** *210x370x550 mm*



702495 Macinadosatore JUNIOR PRO "On Demand"
Motore 230V - 50-60Hz - 190W - 1400 rpm
Macine Piana Ø 50mm
Produttività 3Kg/h - **Capacità campana** 0,50 kg
Peso 6,5 kg - **Dimensioni** 150x360x260 m
Consigliato per piccoli ristoranti o per decaffeinato.

702495/11 Macinadosatore JUNIOR PRO "On Demand"
Motore 110V - 60Hz - 190W - 1400 rpm

702495 Grinder JUNIOR PRO "On Demand"
Motor *230V - 50-60Hz - 190W - 1400 rpm*
Blades *Flat ø 50 mm*
Productivity *3 kg/h* - ***Hopper Capacity*** *0.50 kg*
Weight *6,5 kg* - ***Dimensions*** *150x360x260 mm*
Recommended for small restaurants or decaffeinated coffee use.

702495/11 Grinder JUNIOR PRO "On Demand"
Motor *110V - 60Hz - 190W - 1400 rpm*



702503 *'Lux'* Macinacaffè
Motore 220/240V - 50Hz - 150W 1400rpm
Macine Coniche ø 38 mm - **Capacità campana** 0,2 kg
Peso 2 kg - **Dimensioni** 95x180x300 mm
Carrozzeria in acciaio inox.

702503 'Lux' Coffee Grinder
Motor *220/240V-50Hz-50W-1400 rpm*
Blades *Conical ø 38 mm* - ***Hopper Capacity*** *0.2 kg*
Weight *2 kg* - ***Dimensions*** *95x180x300 mm*
Stainless steel body.



200003

Espresso made in Italy 1901-1962
Dalla Collezione Enrico Maltoni prende forma la prima pubblicazione che ripercorre la storia della macchina da caffè espresso, dalla sua invezione ai modelli degli anni Sessanta, attraverso un secolo di evoluzione tecnica, formale e funzionale.

Espresso made in Italy 1901-1962
Enrico Maltoni's Collection gives shape to the first pubblication that traces the histrory of espresso coffee machine; from his invention to the 60's designs, through a century of technical and functional evolution.



200026

Faema Espresso 1945-2010
400 pagine con oltre 500 immagini.
Il primo libro al mondo che racconta la vera storia della Faema, dalle vicende personali a quelle strettamente aziendali, dalla sua fondazione ai giorni nostri.
Denso di fatti raccontati dopo avere raccolto le testimonianze di familiari e conoscenti del fondatore Carlo Ernesto Valente.
Brevetti, schede tecniche e depliant originali a corredo di immagini, inedite, delle bellissime e antiche macchine per caffè espresso Faema.

Faema Espresso 1945-2010
The first book that tells Faema's real story from its establishment till today, going through personal events to business ones.
The book is filled with stories about its foundator Carlo Ernesto Valente, told by his family and people that new him.
Patents, technical diagrams, original flyers together with unpublished photographs Faema's stunning vintage espresso coffee machines will visually guide you through the book.

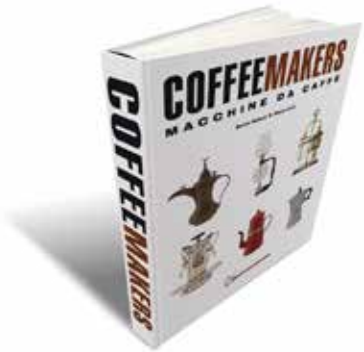

200079

Coffeemakers
Enciclopedia della caffettiera, opera unica nel suo genere per la mole di documentazione mostrata: 2700 immagini, 2080 descrizioni tecniche e numerosi testi divisi nei vari periodi storici. Tutte le tipologie di caffettiere realizzate fino ai nostri giorni, fotografate direttamente nelle case dei collezionisti di tutto il mondo

Coffeemakers
A unique encyclopaedia of coffee makers packed with information: 2700 images, 2080 technical descriptions and countless texts split into various historical periods. This book features all the different kinds of coffee makers produced to date, photographed in the homes of collectors from all over the world.

NUOVA RICAMBI srl

Via dei Mille 20
20061 Carugate (MI)

T +39 02 9253205
F +39 02 9254286

www.nuovaricambi.net • info@nuovaricambi.net

9 900000 146306